DAILY

REPAIR MANUAL

MECHANICAL
ELECTRICAL
ELECTRONIC

IVECO

This publication describes the characteristics, the data, the correct methodology of the repairs that can be made on each individual component of the vehicle.

By complying with the instructions supplied and using the specific tools it is possible to perform any repair intervention correctly, within the specified time frames, while protecting the technicians against incidents.

Before starting any repair work, make sure that all accident prevention devices are ready at hand.

Check and wear the protective personal equipment provided for by the safety standards: goggles, helmet, gloves, shoes.

Check the efficiency of all processing, lifting and transport tools before using them.

The data contained in this publication might fail to reflect the latest changes which the Manufacturer may introduce at any time, for technical or sales purposes, or to meet the requirements of local legislation.

Copy, even partial, of text and drawings is forbidden.

Publication Edited by:
IVECO S.p.A.
T.C.O. - B.U. Customer Service
Lungo Stura Lazio, 15/19
10156 Torino (Italy)

Printed **603.43.351** - 3rd Ed. 2002

Produced by:

SATIZ msx
INTERNATIONAL
An MSX International Company

B.U. TECHNICAL PUBLISHING
C.so Svizzera, 185
10149 Torino (Italy)

SPECIAL REMARKS

The workshop manuals for mechanical parts have been divided into Sections, each of which has a number and its relevant contents are indicated in the General Specifications. Each section features a main Unit (e.g. engine, gears etc.).
The subjects usually dealt with in each section are:
Technical data table, Driving torques, Equipment, Diagnostic, Removal and Fitting in place, Repair operations.
Where possible, the same sequence of procedures has been followed for easy reference.
Diagrams and symbols have been widely used to give a clearer and more immediate illustration of the subject being dealt with, (see next page) instead of giving descriptions of some operations or procedures.

Example

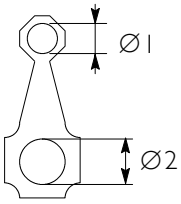

Ø 1 = housing for connecting rod small end bush

Ø 2 = housing for connecting rod bearings



Tighten to torque
Tighten to torque + angular value

Furthermore, within each section, every heading or sub-heading concerning the operations to be carried out is preceded by a six digit number. This number is the Product Code that is to be found in the repair operation described in the REPAIR TIMES CHARTS and in the FAULT CODES.
For quick reference the indication of how to read this code is described below (see the Repair time charts also).

Product Code:

5	0		
PRODUCT		UNIT	SUB-ASSEMBLY COMPONENT

Example:
Product 50 = Frame;
Product 52 = Axles;
Product 53 = Gears etc.

Unit Code:

	0	1	
PRODUCT		UNIT	SUB-ASSEMBLY COMPONENT

Figures three and four identify the ASSEMBLY within the PRODUCT
Example:
Product 50 = Frame;
Unit 01 = Chassis;
Unit 02 = Bumpers etc .

Sub-assembly Code:

		4	0
PRODUCT	UNIT	SUB-ASSEMBLY COMPONENT	

Example:
Product 50 = Frame;
Unit 01 = Chassis;
Sub-assembly 40 = Chassis cross members etc.

Graphs and symbols

	Removal Disconnection
	Refitting Connection
	Removal Disassembly
	Fitting in place Assembly
	Tighten to torque
	Tighten to torque + angle value
	Press or caulk
	Regulation Adjustment
	Warning Note
	Visual inspection Fitting position check
	Measurement Value to find Check
	Equipment
	Surface for machining Machine finish
	Interference Strained assembly
	Thickness Clearance
	Lubrication Damp Grease
	Sealant Adhesive
	Air bleeding

	Intake
	Exhaust
	Operation
ϱ	Compression ratio
	Tolerance Weight difference
	Rolling torque
	Replacement Original spare parts
	Rotation
	Angle Angular value
	Preload
	Number of revolutions
	Temperature
	Pressure
>	Oversized Higher than.... Maximum, peak
<	Undersized Less than.... Minimum
	Selection Classes Oversizing
	Temperature < 0° Cold Winter
	Temperature > 0° Hot Summer

DAILY

Print 603.43.351 – 3rd edition
3rd Edition – February 2002

UPDATE DATA

Section	Description	Page	Revision date
1	General	4, 5, 7 ÷ 17	Revi May 2003
2	Engine	18, 19, 71, 93, 94, 102, 106, 120, 183, 191, 198, 199, 200, 200/1, 200/2, 222, 230, 234, 251, 262, 264, 275, 299, 300, 301, 307, 318, 319, 321, 326, 330, 333, 335, 338, 341, 342, 343, 344, 346, 351, 359, 360, 371, 372, 378, 385, 387, 389, 410/1 ÷ 410/42	Revi May 2003
4	Gearbox	1, 7 ÷ 43, 45, 45/1 45/2, 46, 47, 52, 52/1, 52/2, 53 ÷ 56, 59 ÷ 61, 63 ÷ 76	Revi May 2003
6	Rear axles	67	Revi May 2003
7	Axles	15	Revi May 2003
8	Suspensions	9, 14/1, 14/2, 38, 77, 78, 84, 99 ÷ 110	Revi May 2003
10	Steering gear	2, 4, 6, 7, 9, 10, 16, 26 ÷ 28	Revi May 2003
11	Brakes	2, 26, 28, 29, 34, 36, 38, 39, 42 ÷ 45, 49 ÷ 62	Revi May 2003
12	Bodywork	51 ÷ 60	Revi May 2003
13	Scheduled maintenance	1, 3 ÷ 12	Revi May 2003

INDEX OF SECTIONS

	Section
General information	**1**
Engine	**2**
Clutch	**3**
Transmission	**4**
Propeller shafts	**5**
Rear axles	**6**
Axle	**7**
Front and rear suspensions	**8**
Wheels and tyres	**9**
Steering gear	**10**
Hydro-pneumatic system - brakes	**11**
Bodywork - Chassis frame - Cab air-conditioning	**12**
Scheduled Maintenance	**13**
Electrical/electronic system	**14**

SECTION 1

General

Page

IDENTIFICATION DATA 3

❑ Vehicle Identification Plate 3

COMPOSITION OF MODELS 4

ALPHANUMERICAL CODING FOR VEHICLE IDENTIFICATION 6

ALPHANUMERICAL CODING FOR BUS IDENTIFICATION 14

REPLENISHING FLUIDS 17

IDENTIFICATION DATA

Vehicle Identification Plate

Plate legend

a) Type-approval number marking, manufacturer's code and general vehicle data.
b) Total tractor weight.
c) Total weight of tractor + trailer (if applicable).
d) Permissible weight limit on front axle.
e) Permissible weight limit on middle axle (if applicable).
f) Permissible weight limit on rear axle.
g) Permissible weight limit on 4th axle (if applicable).
h) Specific identification of type.
i) Wheelbase in mm.
l) Engine type.
m) Engine power.
n) No. of axles.
o) Place of manufacture.

* Permissible grade of smoke

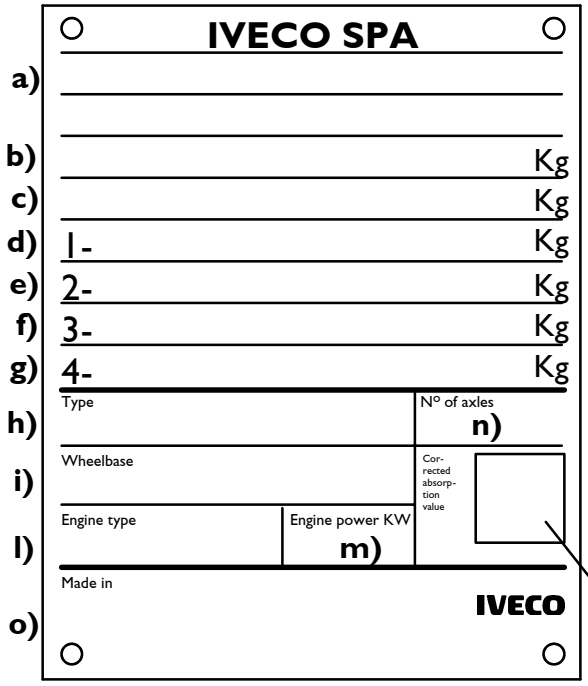

Admissible smoke value

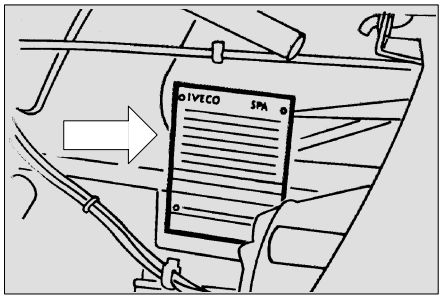

Manufacturer's plate

To identify the vehicle according to E.E.C. directive (on the front cross member).

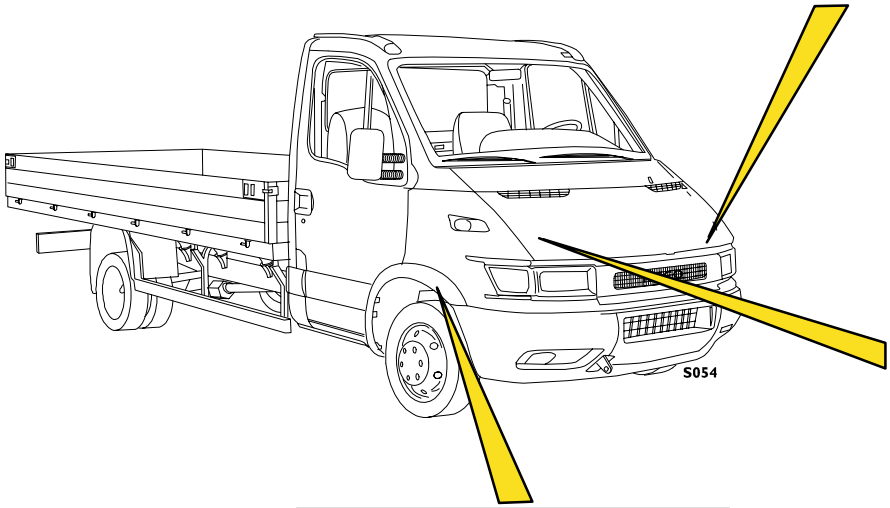

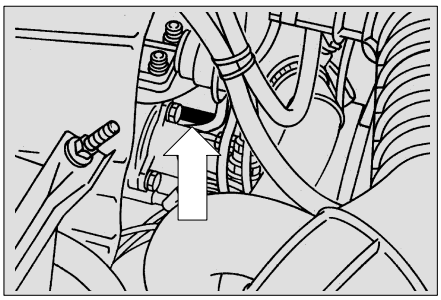

Engine

Stamping (right-hand side on the crankcase)

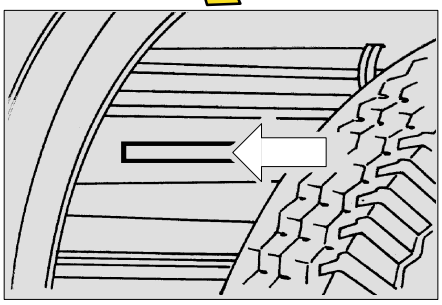

Chassis frame

Stamping (at the front on the right-hand structural member of the chassis frame).

COMPOSITION OF MODELS

ASSEMBLIES	MODELS	29 L 9	29 L 10	29 L 11	29 L 12	35 S 9	35 S 10	35 S 11	35 S 12	35 S 13	35 S 15	35 C 9	35 C 10	35 C 11	35 C 12	35 C 13	35 C 15	40 C 9	40 C 10	40 C 11	40 C 12	40 C 13
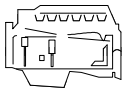	8140.63.4.. (85 CV PC/NA + EGR + OXICAT)	:				:						:						:				
	8140.43R (90 CV ID/TCA*)	⊠				⊠						⊠						⊠				
	8140.43B.43XX (105 CV ID/TCA*)			o				o						o						o		
	8140.43C.40XX (105 CV ID/TCA + OXICAT)			⊡				⊡						⊡						⊡		
	8140.43S.41XX (125 CV ID/TCA* E.G.R. + OXICAT)									■												
	8140.43S.43XX (125 CV ID/TCA*)									o						o						o
	8140.43N.43XX (150 CV ID/TCA*)										o						o					
	F1AE0481A*A (96 CV)		o				o						o						o			
	F1AE0481B*A (116 CV)				o				o						o						o	
	F1AE0481B*B (116 CV + E.G.R. + OXICAT)									■												
	Single disc 9" 1/4	o	o	o	o	o	o	o	o				o	o	o			o	o	o	o	
	Single disc 10" 1/2									o						o			o		o	o
	Single disc 11										o						o					
	ZF 5S 200	o		o		o		o				o		o				o		o		
	ZF 5S 270		o		o		o		o				o		o				o		o	
	ZF 6S 300									o	o					o	o					o
	FRONT AXLES: 5817	o	o	o	o	o	o	o	o	o	o											
	5818							□	□	□	◉		◉		◉		◉					
	5819										◈	o	◈	o	◈	o	◈	o	o	o	o	o
	5823																					
	450210	o	o	o	o	o	o	o	o	o	o											
	450311/1											o	o	o	o	o	o	o	o	o	o	o
	450511																					
	450517/2																					
Rack-and-pinion	Power steering	o	o	o	o	o	o	o	o	o	o	o	o	o	o	o	o	o	o	o	o	o
	FRONT MECHANICAL SUSPENSIONS: independent with transverse leaf spring (MK3)	o	o	o	o	o	o	o	o	o	o	o	o	o	o	o	o					
	independent with torsion bars											(•)	(•)	(•)	(•)	(•)	(•)	o	o	o	o	o
	REAR MECHANICAL SUSPENSIONS: Parabolic											◇	◇	◇	◇	◇	◇	◇	◇	◇	◇	◇
	- single leaf	•	•	•	•	•	•	•	•	•	•											
	- double-leaf	◓	◓	◓	◓	◓	◓	◓	◓	◓	◓											
	Semi-elliptic											⠿	⠿	⠿	⠿	⠿	⠿	⠿	⠿	⠿	⠿	⠿
	Semi-elliptic with leaf spring											◆	◆	◆	◆	◆	◆	◆	◆	◆	◆	◆
	REAR AIR SUSPENSIONS	⊗	⊗	⊗	⊗	⊗	⊗	⊗	⊗	⊗	⊗	⊗	⊗	⊗	⊗	⊗	⊗	⊗	⊗	⊗	⊗	⊗

ID = Direct injection
NA = Aspirated
PC = Indirect injection (pre-combustion chamber)
TCA = Turbocharged with intercooler
OXICAT = Catalytic silencer
(•) Optional extra (with max load of 1900 kg)
o Standard
□ Alternative
* With Common Rail electronic injection system
EGR = Anti-pollution device
■ Vehicle category M1 produced until 31/12/01
⊡ Non-EU markets
: Vehicles made until 9/01
⊠ Vehicles made since 9/01
◉ Vehicles with front suspension with transverse leaf spring
◈ Vehicles with front suspension with torsion bars
⠿ Standard on chassis cabs and vans 40C Alternatively on Vans – Chassis Cowls and Cut Aways
◇ Standard on Vans (excluding 40C) – Chassis Cowls and Cut Aways – Alternatively on Chassis Cabs
• Excluding 35 S chassis cabs and chassis cowls – Combi
◓ Only 35 S chassis cabs and chassis cowls – Combi
◆ Chassis cabs only, as an alternative
⊗ Alternatively, excluding 35C (with max. load of 1900 kg and tyres 195/75 R16) and 40 C Chassis cabs - 40 C Vans and Cut Aways
S Single rear wheels
L = Light with single rear wheels
C = Twin rear wheels
BUS Glazed vans – Glazed Vendor – Chassis Cowls – Cut Aways, bodied or adaptable to carry passengers

COMPOSITION OF MODELS

ASSEMBLIES	MODELS	45 C 11	45 C 13	50 C 11	50 C 13	50 C 15	60 C 15	65 C 15	35 S 13 BUS	40 C 13 BUS	40 C 15 BUS	50 C 11 BUS	50 C 13 BUS	50 C 15 BUS
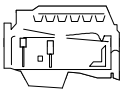	8140.63.4.. (85 CV PC/NA + EGR + OXICAT)													
	8140.43R (90 CV ID/TCA*)													
	8140.43B.43XX (105 CV ID/TCA*)	o		o										
	8140.43C.40XX (105 CV ID/TCA + OXICAT)	⊡		⊡								o		
	8140.43S.41XX (125 CV ID/TCA* E.G.R. + OXICAT)													
	8140.43S.43XX (125 CV ID/TCA*)		o		o	o			o	o			o	
	8140.43N.43XX (150 CV ID/TCA*)						o	o			o			o
	F1AE0481A*A (96 CV)													
	F1AE0481B*A (116 CV)													
	F1AE0481B*B (116 CV + E.G.R. + OXICAT)													
	Single disc 9" 1/4													
	Single disc 10" 1/2	o	o	o	o				o	o		o	o	
	Single disc 11					o	o	o			o			o
	ZF 5S 200													
	ZF 5S 270													
	ZF 6S 300	o	o	o	o	o	o	o	o	o	o	o	o	o
	FRONT AXLES: 5817								o					
	5818													
	5819	o	o	o	o	o				o	o	o	o	o
	5823						o	o						
	450210								o					
	450311/1									o	o			
	450511	o	o	o	o	o						o	o	o
	450517/2						o	o						
Rack-and-pinion	Power steering	o	o	o	o	o	o	o	o	o	o	o	o	o
	FRONT MECHANICAL SUSPENSIONS: independent with transverse leaf spring (MK3)								o					
	independent with torsion bars	o	o	o	o	o	o	o						
	REAR MECHANICAL SUSPENSIONS: Parabolic	◇	◇	◇	◇	◇	◇	◇		o	o	o	o	o
	- single leaf								o					
	- double-leaf													
	Semi-elliptic	❖	❖	❖	❖	❖	❖	❖						
	Semi-elliptic with leaf spring	◆	◆	◆	◆	◆	◆	◆						
	REAR AIR SUSPENSIONS	⊗	⊗	⊗	⊗	⊗	⊗	⊗	⊗	⊗	⊗	⊗	⊗	⊗

ID = Direct injection
NA = Aspirated
PC = Indirect injection (pre-combustion chamber)
TCA = Turbocharged with intercooler
OXICAT = Catalytic silencer
(•) Optional extra (with max load of 1900 kg)
o Standard
□ Alternative
* With Common Rail electronic injection system
EGR = Anti-pollution device
■ Vehicle category M1 produced until 31/12/01
⊡ Non-EU markets
⁝ Vehicles made until 9/01
⊠ Vehicles made since 9/01
◉ Vehicles with front suspension with transverse leaf spring
◈ Vehicles with front suspension with torsion bars

❖ Standard on chassis cabs and vans 40C
Alternatively on Vans – Chassis Cowls and Cut Aways
Standard on Vans (excluding 40C) – Chassis Cowls and Cut Aways – Alternatively on Chassis Cabs
• Excluding 35 S chassis cabs and chassis cowls – Combi
◓ Only 35 S chassis cabs and chassis cowls – Combi
◆ Chassis cabs only, as an alternative
⊗ Alternatively, excluding 35C (with max. load of 1900 kg and tyres 195/75 R16) and 40 C Chassis cabs - 40 C Vans and Cut Aways
S Single rear wheels
L = Light with single rear wheels
C = Twin rear wheels
BUS Glazed vans – Glazed Vendor – Chassis Cowls – Cut Aways, bodied or adaptable to carry passengers

ALPHANUMERICAL CODING FOR VEHICLE IDENTIFICATION

CUSTOMIZED VEHICLE (V.P.)

MARKET VEHICLE (V.M.)

STANDARD VEHICLE (V.C.B.)

1	2	3	4	5	6	7	8	9	10	11	12	13	14

RANGE

1	2	3	4	5	6	7	8	9	10	11	12	13	14

A ⇨ **LIGHT ROAD VEHICLES**

PROGRAMMING FAMILY

1	2	3	4	5	6	7	8	9	10	11	12	13	14

1 ⇨	L 30	29 L 35 S	CHASSIS CABS AND DERIVATIVES
2 ⇨	L 35	35 C 40 C	
3 ⇨	L 50	50 C 45 C	
4 ⇨	L 65	60 C 65 C	
5 ⇨	L 30 A	29 L 35 S	VANS AND DERIVATIVES
6 ⇨	L 35 A	35 C 40 C	
7 ⇨	L 50 A	50 C 45C	
8 ⇨	L 65A	60 C 65 C	

PROGRAMMING FAMILY

1	2	3	4	5	6	7	8	9	10	11	12	13	14

H	F 25	29 L	CHASSIS CABS AND DERIVATIVES
M	F 30	35 S	
E	F 35	35 C 40 C	
L	F 25 A	29 L	VANS AND DERIVATIVES
N	F 30 A	35 C	
G	F 35 A	35 C 40 C	

ENGINE

1	2	3	4	5	6	7	8	9	10	11	12	13	14

A **8140.63.40XX PC/NA - 85 CV**

B **8140.43 C.40XX ID/TCA - 105 CV**

E **8140.43 S.41XX ID/TCA - 125 CV (MI)**

ENGINE

1	2	3	4	5	6	7	8	9	10	11	12	13	14

F **8140.43 B.43XX ID/TCA – 105 CV**

G **8140.43 S.43XX ID/TCA – 125 CV**

H **8140.43 N.43XX ID/TCA – 150 CV**

M **8140.43 R.43XX ID/TCA – 90 CV**

J **F1AE0481A ID/TCA – 96 CV**

K **F1AE0481B ID/TCA – 116 CV**

L **F1AE0481B ID/TCA – 116 CV (MI)**

SUSPENSION

1	2	3	4	5	6	7	8	9	10	11	12	13	14

A Mechanical suspension: front with transverse leaf spring.

B Mechanical suspension: front with torsion bars.

C Mechanical front suspension with transverse leaf spring – rear air suspension.

D Mechanical front suspension with torsion bars – rear air suspension.

VERSION

1	2	3	4	5	6	7	8	9	10	11	12	13	14

1 **CHASSIS CAB**

35 S.9 (•) **- 29 L.9 - 35 S.11** (•)
29 L.10 (•) **- 29 L.11 - 29 L.12** (•)
35 S.10 (•) **- 35 S.12** (•) **- 35 S.13** (•)
35 S 15 (•) **- 35 C.9** (•) **- 35 C.10** (•)
35 C.11 (•) **- 35 C.12** (•) **- 35 C.13** (•)
35 C 15 (•) **- 40 C.9 - 40 C.11 - 40 C.12**
45 C.11 - 45 C.13 - 50 C.11 (•)
50 C.13 (•) **- 50 C.15** (•) **- 60 C.15** (•)
65 C.15 (•)

6 **CHASSIS CAB 6 + 1**

29 L.9 D - 29 L.10 D (•) **- 29 L.11 D**
29 L.12 D (•) **- 35 S.9 D** (•) **- 35 S.10 D** (•)
35 S.11 D (•) **- 35 S.12 D** (•) **- 35 S.13 D** (•)
35 S.15 D (•) **- 35 C.9 D** (•) **- 35 C.10 D** (•)
35 C.11 D (•) **- 35 C.12** (•) **- 35 C.13 D** (•)
35 C.15 D (•) **- 40 C.12 D - 40 C.13 D**
45 C.11 D - 45 C.13 D - 50 C.11 D (•)
50 C.13 D (•) **- 50 C.15 D** (•) **- 60 C.15 D**
65 C.15 D (•)

0 **CHASSIS COWL**

29 L.9 CC - 29 L.10 CC (•) **- 29 L.11 CC**
29 L. 12 CC (•) **- 35 S.9 CC** (•) **- 35 S.10 CC** (•)
35 S.11 CC (•) **- 35 S.12 CC** (•) **- 35 S.13 CC** (•)
- 35 S. 15 CC (•) **- 35 C.9 CC** (•) **- 35 C.10 CC**
(•) **- 35 C.11 CC** (•) **- 35 C.12 CC** (•)
35 C.13 CC (•) **- 35 C.15 CC** (•) **- 40 C. 9 CC**
40 C.10 CC - 40 C.11 CC - 40 C.12 CC
40 C.13 CC - 45 C.11 CC - 45 C.13 CC
50 C.11 CC (•) **- 50 C.13 CC** (•) **- 50 C.15 CC**
(•) **- 60 C.15 CC - 65 C.15 CC** (•)

(•) present version /P too (rear air suspensions)

VERSION

1	2	3	4	5	6	7	8	9	10	11	12	13	14

R — **CHASSIS COWL SHORT**

29 L.9 CCS - 29 L.10 CCR (•) **- 29 L.11CCS**
29 L.12 CCR (•) **- 35 S 9. CCS** (•)
35 S. 10 CCS (•) **- 35 S.10CCR** (•)
35 S.11CCS (•) **- 35 S.12 CCR** (•)
35 S.12 CCS (•) **- 35 S.13 CCS** (•)
35 S.15 CCS (•) **- 35 C.9 CCS** (•)
35 C.10 CCR - 35 C.10 CCS (•)
35 C.11 CCS (•) **- 35 C.12 CCR**
35 C.12 CCS (•) **- 35 C.13 CCS** (•)
35 C.15 CCS (•) **- 40 C.9 CCS**
40 C.10 CCR - 40 C.11 CCS
40 C.12 CCR - 40 C.13 CCS - 45 C.11 CCS
45 C.13 CCS - 50 C.11 CCS (•)
50 C.13 CCS (•) **- 50 C.15 CCS** (•)
60 C.15 CCS - 65 C.15 CCS (•)

A — **CUT-AWAY**

35 C.9 CA (•) **- 35 C.10 CA** (•)
35 C.11 CA (•) **- 35 C.12 CA** (•)
35 C.13 CA (•) **- 35 C. 15 CA** (•)
40 C.9 CA - 40 C.10 CA - 40 C.11 CA
40 C.12 CA - 45 C.11 CA - 45 C.13 CA
50 C.11 CA (•) **- 50 C.13 CA** (•)
50 C.15 CA (•) **- 60 C.15 CA - 65 C.15 CA** (•)

H — **VAN**

29 L.9 V - 29 L.10 V (•) **- 29 L.11 V**
29 L.12 V (•) **- 35 S.9 V** (•) **- 35 S.10 V** (•)
35 S.11 V (•) **- 35 S.12 V** (•) **- 35 S.13 V** (•)
35 S.15 V (•) **- 35 C.9 V** (•) **- 35 C.10 V** (•)
35 C.11 V (•) **- 35 C.12 V** (•) **- 35 C.13 V** (•)
35 C.15 V (•) **- 40 C.9 V - 40 C.10 V**
40 C.11 V - 40 C.12 V - 40 C.13 V
45 C.11 V - 45 C.13 V - 50 C.11 V (•)
50 C.13 V (•) **- 50 C.15 V** (•) **- 60 C.15 V**
65 C.15 V (•)

V — **SEMI-GLAZED VAN**

29 L.10 SV (•) **- 29 L.12 SV** (•) **- 30 S.9 SV**
30 S.11 SV - 35 S.9 SV (•) **- 35 S.10 SV** (•)
35 S.11 SV (•) **- 35 S.12 SV** (•) **- 35 S.13 SV** (•) **- 35 S.15 SV** (•) **- 35 C.9 SV** (•) **- 35 C.10 SV** (•) **- 35 C.11 SV** (•) **- 35 C.12 SV** (•) **- 35 C.13 SV** (•) **- 35 C.15 SV** (•) **- 40 C.9 SV - 40 C.10 SV - 40 C.11 SV - 40 C.12 SV - 40 C.13 SV - 45 C.11 SV - 45 C.13 SV - 50 C.11 SV** (•) **- 50 C.13 SV** (•) **50 C.15 SV** (•) **- 65 C.15SV** (•)

(•) present version /P too (rear air suspensions)

VERSION

1	2	3	4	5	6	7	8	9	10	11	12	13	14

U	VENDOR VERSION CITY VAN	29 L.9 C.V. - 29 L. 10 C.V. (•) - 29 L.12 C.V. (•) - 29 S.11 C.V. - 35 S.9 C.V. (•) - 35 S.10 C.V. (•) - 35 S.11 C.V. (•) - 35 S.12 C.V. (•) 35 S.13 C.V. (•) - 35 S.15 C.V. (•) - 35 C.9 C.V. (•) - 35 C.10 C.V. (•) - 35 C.11 C.V. (•) - 35 C.12 C.V. (•) - 35 C.13 C.V. (•) - 35 C.15 C.V. (•) - 40 C.10 C.V. - 40 C.12 C.V. - 50 C.11 C.V. (•) - 50 C.13 C.V. (•) - 50 C.15 C.V. (•)
5	COMBI	29 L.12 C (•) - 35 S.9 C (•) - 35 S.11 C (•) 35 S.12 C (•) - 35 S.13 C (•)

(•) present version /P too (rear air suspensions)

WHEELBASE

1	2	3	4	5	6	7	8	9	10	11	12	13	14

1	3000 mm (L30 - L30A - L35A - L50A - F25 - F30 - F25A - F30A - F35A)
1	3000 L mm (F35A)
2	3000 L mm (L35 - L30A - L35A - L50A - F25A - F30A - F35A)
3	3300 mm (L30A - L35A - L50A - L65A - F25A - F30A - F35A)
3	3450 mm (L30 - L35 - L50 - L65)
4	3450 mm (F25 - F30 - F35)
4	3750 mm (L30 - L35 - L50 - L65)

WHEELBASE

1	2	3	4	5	6	7	8	9	10	11	12	13	14

4	3950 mm (L30A - L35A - L50A - L65A)
5	4100 mm (L35)
5	3750 mm (F30 - F35)
6	3950 mm (F30 - F35 - F30A - F35A)
6	4750 mm (L50 - L65)
7	4100 mm (F35)
7	4350 mm (L50 - L65)
8	3950 mm (L30 - L35)

GEARBOX

1	2	3	4	5	6	7	8	9	10	11	12	13	14

A	5 SPEED
B	6 SPEED

DRIVE – INTERNAL HEIGHT OF LOADING BAY

1	2	3	4	5	6	7	8	9	10	11	12	13	14

LEFT-HAND DRIVE (L30 - L35 - L50 - L65 - F25 - F30 - F35)	1
LEFT-HAND DRIVE AND INTERNAL HEIGHT OF LOADING BAY H_1 = 1545 mm (L30A - L35A - L50A - L65A - F25A - F30A - F35A)	1
LEFT-HAND DRIVE AND INTERNAL HEIGHT OF LOADING BAY H_2 = 1900 mm (L30A - L35A - L50A - L65A - F25A - F30A - F35A)	2
LEFT-HAND DRIVE AND INTERNAL HEIGHT OF LOADING BAY H_3 = 2100 mm (L30A - L35A - L50A - L65A - F30A - F35A)	3
RIGHT-HAND DRIVE (L30 - L35 - L50 - L65 - F25 - F30 - F35)	A
RIGHT-HAND DRIVE AND INTERNAL HEIGHT OF LOADING BAY H_1 = 1545 mm (L30A - L35A - L50A - L65A - F25A - F30A - F35A)	A
RIGHT-HAND DRIVE AND INTERNAL HEIGHT OF LOADING BAY H_2 = 1900 mm (L30A - L35A - L50A - L65A - F25A - F30A - F35A)	B
RIGHT-HAND DRIVE AND INTERNAL HEIGHT OF LOADING BAY H_3 = 2100 mm (L30A - L35A - L50A - L65A - F30A - F35A)	C

MANDATORY MARKET OPTIONAL EXTRAS

1	2	3	4	5	6	7	8	9	10	11	12	13	14

OPTIONAL EXTRAS REQUIRED BY THE CUSTOMER

1	2	3	4	5	6	7	8	9	10	11	12	13	14

ALPHANUMERICAL CODING FOR BUS IDENTIFICATION

CUSTOMIZED VEHICLE (V.P.)

MARKET VEHICLE (V.M.)

STANDARD VEHICLE (V.C.B.)

1	2	3	4	5	6	7	8	9	10	11	12	13	14

RANGE

1	2	3	4	5	6	7	8	9	10	11	12	13	14

A — **LIGHT ROAD VEHICLES**

PROGRAMMING FAMILY

1	2	3	4	5	6	7	8	9	10	11	12	13	14

A	LBU1	35 S
B	LBU2	40 C
C	LBU2	50 C

ENGINE

1	2	3	4	5	6	7	8	9	10	11	12	13	14

G — **8140.43 S.43XX ID/TCA - 125 CV**

H — **8140.43 N.43XX ID/TCA - 150 CV**

SUSPENSION

1	2	3	4	5	6	7	8	9	10	11	12	13	14

A Mechanical suspension: front with transverse leaf spring.

B Mechanical suspension: front with torsion bars.

C Mechanical front suspension with transverse leaf spring – rear air suspension.

D Mechanical front suspension with torsion bars – rear air suspension.

VERSION

1	2	3	4	5	6	7	8	9	10	11	12	13	14

V	**GLAZED VENDOR**	**LBU2**
F	**GLAZED VAN**	**LBU1 LBU2**
2	**MINIBUS**	**LBU2**
3	**HIRE**	**LBU2**
I	**PRIMARY SCHOOLS**	**LBU2**
M	**MIDDLE SCHOOLS**	**LBU2**

GEARBOX – WHEELBASE

1	2	3	4	5	6	7	8	9	10	11	12	13	14

A		5 SPEED 3000 L mm	LBU1
B		6 SPEED 3000 L mm	LBU1 LBU2
C		6 SPEED 3950 mm	LBU2

DRIVE – INTERNAL HEIGHT OF LOADING BAY

1	2	3	4	5	6	7	8	9	10	11	12	13	14

LEFT-HAND DRIVE AND INTERNAL HEIGHT OF LOADING BAY H_1 = 1900 mm (LBU1 - LBU2)		2
RIGHT-HAND DRIVE AND INTERNAL HEIGHT OF LOADING BAY H_2 = 1900 mm (LBU1 - LBU2)		B

REPLENISHING FLUIDS

IVECO RECOMMENDED LUBRICANTS		PARTS TO BE REPLENISHED	Quantity	
			Litres	kg
Urania Turbo Urania Turbo LD	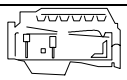	**Engine 8140** Periodic change		
		Sump + filter capacity	6.3	6.7
		Sump capacity	5.2	4.6
		Total dry engine capacity	6.9	6.1
		Sump capacity: - max level - min level	5.2 3.5	4.6 3.1
			Litres	kg
Urania Turbo Urania Turbo LD	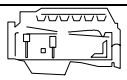	**Engine FIA** Periodic change		
		Quantity of oil in circulation in the cartridge filter and heat exchanger	1	0.85
		Total dry engine capacity	5.5	4.85
		Sump capacity: - max level - min level	4.5 3	3.95 2.69
Max. gradient negotiable by vehicle uphill/downhill with oil at minimum level 30%				
Tutela TRUCK GEARLITE		Gearbox ZF 5S – 200	2	1.8
Tutela TRUCK GEARLITE		Gearbox ZF 6S – 200	2.7	2.43
		Front axle:		
		5817	-	-
		5818	-	-
		5819	-	-
		5823	-	-
		Rear axles:		
Tutela W140/M-DA (SAE 85W140)		450210	1.8	1.5
Tutela W140/M-DA (SAE 85W140)		450311/1	1.9	1.65
Tutela W140/M-DA (SAE 85W140)		450511	1.9	1.65
Tutela W140/M-DA (SAE 85W140)		450517/2	3	2.7
Tutela GI/A		Power steering	1.4	1.3
Tutela TRUCK DOT SPECIAL	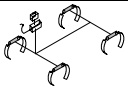	Brake circuit	1.11	1
Arexons DP1		Windscreen washer	5	-
Paraflu11 *		Cooling system	9	-

* = Protective anti-freeze (concentration 50%, freezing point –35°C)

International lubricant description	FL Group products
Engine oil meets specifications:	
ACEA E4 with completely synthetic base SAE 5W30	Urania FE 5W30
ACEA E5 with mineral base	Urania LD5
ACEA E3 with mineral base	Urania Turbo LD
ACEA E2, API CF-4 with mineral base	Urania Turbo
Differential and wheel hub oil meets specifications:	
API GL-5 with mineral base SAE 85W140	Tutela W 140/M - DA
API GL-5 with mineral base SAE 80W90	Tutela W 90/M - DA (1)
Mechanical gearbox oil containing non-EP anti-wear additives Meets specification API GL 4 SAE 75W80	Tutela Truck Gearlite
Hydrostatic transmission and power steering oil Meets specifications: ATF-DEXRON II D	Tutela GI/A
General-purpose grease lithium soap based grease N.L.G.I. fluidity no. 2	Tutela MR 2
Specific grease for wheel hubs and bearings lithium soap based grease N.L.G.I. fluidity no. 3	Tutela MR 3
Hydraulic brake and clutch control fluid In conformity with N.H.T.S.A. standards No. 116, ISO 4925 Standard SAE J 1703, IVECO STANDARD 18-1820	Tutela TRUCK DOT SPECIAL
Windscreen washer liquid Mixture of spirits, water and surfactants CUNA NC 956-11	Tutela Professional SC 35
Concentrated protective radiator fluid ethylene glycol based containing corrosion inhibitors, in conformity with Iveco Standard 18-1820	Paraflu[11]

(1) Specific for cold climes.

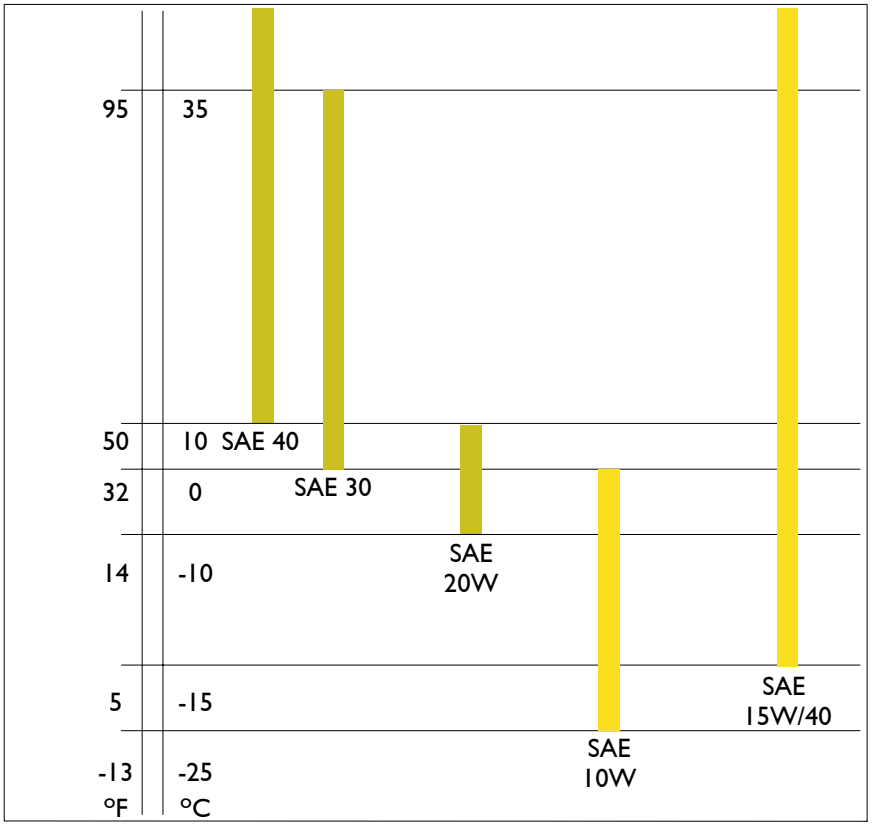

SECTION 2

5401 Engines

Page

ENGINES WITH ELECTRONIC HIGH-PRESSURE INJECTION SYSTEM 25
- ❑ 8140.43R. 43XX
- ❑ 8140.43B. 43XX
- ❑ 8140.43S. 41XX
- ❑ 8140.43S. 43XX
- ❑ 8140.43N. 43XX

ENGINES WITH ROTARY MECHANICAL INJECTION PUMP 167
- ❑ 8140.43C. 43XX
- ❑ 8140.63C. 40XX

ENGINE F1A 249

5401 Engines 8140.XXX

Page

MAIN SERVICING OPERATIONS TO BE PERFORMED ON VEHICLE ENGINE 5

ENGINE REMOVAL-REFITTING 7

- ❑ Removal (Engine 8140.43B/R/S) 7
- ❑ Removal (Engine 8140.43C - 8140.63) 12
- ❑ Refitting 13
- ❑ Checks and tests 13
- ❑ Bleending the fuel system 14
- ❑ Power steering system air bleed 14

OXICAT - OXYDIZER CATALYST (Vehicles with 8140.43c - 8140.63 engines) . . . 14

- ❑ Description 14
- ❑ Cylinder head removal and refitting 15
- ❑ Removal 15
- ❑ Refitting 16

REPLACING BELTS 17

- ❑ Replacing air-conditioning compressor drive belt17
- ❑ Disassembly 17
- ❑ Assembly and adjusting belt tension 17
- ❑ Replacing water pump - alternator drive belt . . 17
- ❑ Disassembly 17
- ❑ Assembly and adjusting belt tension 17
- ❑ Changing the timing system driving belt 17
- ❑ Disassembly 17
- ❑ Removal 18
- ❑ Refitting 19

REPLACING WATER PUMP 20

	Page
❑ Disassembly	20
❑ Assembly	20
REPLACING INJECTORS (ENGINE 8140.63 - 8140.43C)	21
❑ Disassembly	21
❑ Assembly	21
REPLACING INJECTION PUMP	21
❑ Disassembly	21
❑ Assembly and injection pump adjustment	22
ENGINE FLYWHEEL REMOVAL-REFITTING	23
❑ Removal	23
❑ Refitting	23
❑ Removal	23
❑ Refitting	23

MAIN SERVICING OPERATIONS TO BE PERFORMED ON VEHICLE ENGINE

On vehicles equipped with 8140.43B/R/S (Common Rail) engines, follow the indications specified below before performing engine servicing operations that involve fuel system:

- ❑ before every engine servicing operation, perform engine/vehicle diagnosis by proper IVECO testers and print out obtained results.
- ❑ MS6.3 control unit replacement shall be authorised by **Help Desk.**
- ❑ The following fuel system components shall not be overhauled but replaced: flow control devices, pressure relief valve, fuel pressure sensor, rail, complete CPI high pressure pump, pressure control valve, electroinjectors;
- ❑ Every Common Rail system part is packed by supplier into oil paper sheets and then stored into cardboard boxes. These parts shall be protected against dampness and shall be unpacked just before their use.
- ❑ Take utmost care to part cleanliness during filter and prefilter handling and fitting (even in case of simple replacement) to prevent foreign matters and dirt infiltration. To this purpose, hydraulic part and sensor protective plugs shall be removed just before refitting into place.
- ❑ Assembly direction shall be observed for all electric connections.
- ❑ Every threaded connection shall be tightened to the specified torque.
- ❑ Every quick coupling connector (on this engine find them on high pressure pump and diesel fuel draining duct) shall be fitted properly. Operate on the tabs set at connector base to remove them.

Electroinjector:

injector body connections/unions/nuts shall never be manipulated. Nozzle body and electromagnet shall never be disassembled, since this operation is not required and is forbidden.
When servicing operations on high pressure pipe are required, the hexagon on injector side shall be held with proper wrench.
Before servicing pipes, check whether injector is fitted into seat on cylinder head.
When removing/refitting injector draining duct, do not remove retaining spring from its seat on injector: when pushing the spring towards the engine and exerting a vertical force on connector, recycling is released. When refitting, put recycle connector into its seat and exert a vertical force by pressing the retaining spring towards engine. Fitting shall be friendly.

Rev. sensor (camshaft/flywheel):

during positioning, air gap between sensor and phonic wheel shall be falling within 0.8 and 1.5 mm and detection surface and wheel surface shall be parallel.

CPI high pressure pump:

it is forbidden to operate on pressure control or third pumping element cut-out device.
When servicing operations on high pressure pipe are required, the hexagon on pump side shall be held with proper wrench.
Before servicing high pressure pipe, check whether pump is properly fitted into its seat.

High pressure pipes

When removed, high pressure pipes shall not be reused but replaced.
Fixing connection tightening or loosening shall be performed with injectors, rail and high pressure pump perfectly secured and holding the hexagon on component side if there is enough space.

Rail and accessories

Pressure control device and pressure relief valve can be refitted 5 consecutive times, then they shall be replaced. Before refitting they shall be smeared with an oil film.
Overpressure valve shall be lubricated before refitting and its seal shall always be replaced.
For engine 8140.43S only - Since engine No. 3089322, a rail with the same configuration but without flow limiters and pressure relief valve has been mounted. The same prescriptions specified for the previous one shall be complied with.

540110 ENGINE REMOVAL-REFITTING

Removal (Engine 8140.43B/R/S)

Figure 1

Set the vehicle over the pit or on the lift.

Lift up the bonnet (1), unscrew the screws securing it and take it off. Remove the prop (2).

Disconnect the negative cable (3) and the positive cable (5) from the battery (4) and detach this from the engine bay.

Unhook the cable (17) from the bonnet opening control devices.

Disconnect the electrical connections (8) of the front headlamps.

Unscrew the nuts (6) and screws (7), then remove the front cross member (16) with the light clusters.

Unscrew the screws (10, 12 and 14) and remove the bottom side guards (11 and 13).

Unscrew the eight nuts (9) and remove the bumper (15).

Underneath the vehicle (see Figure 4):

- ❑ Unscrew the screws (8) and nuts (10), then remove the bottom side guards (11).
- ❑ Unscrew the screws (⇒) and remove the central guard (12).

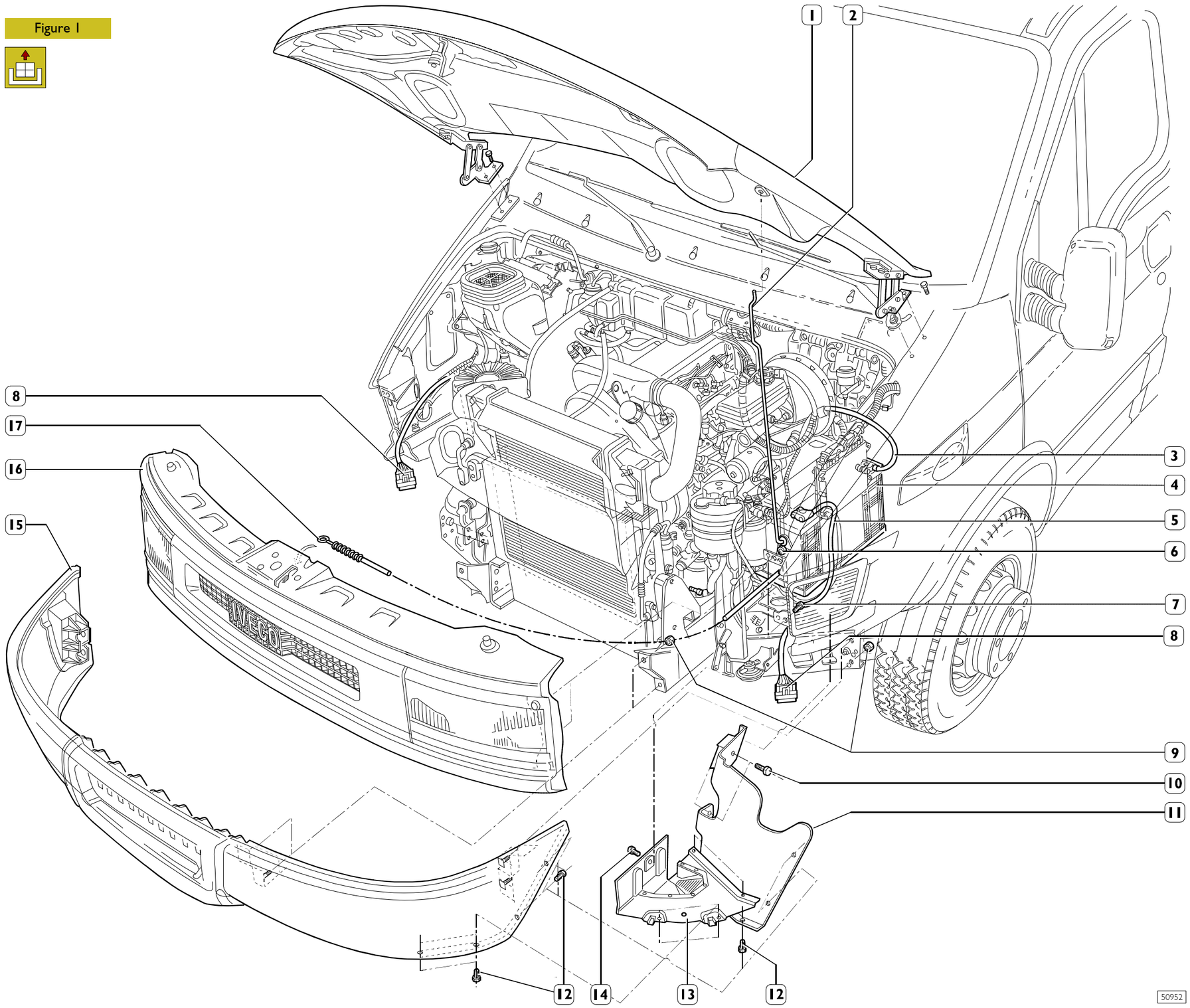

Take the cap (1) off the expansion tank (3).

Unscrew the coolant plug (10), under the radiator (11), and drain the cooling system.

Disconnect the heat exchanger pipes (7 and 8) from the intake manifold and from the turbocharger.

Close the turbocharger air outlet appropriately to prevent foreign bodies accidentally getting inside and damaging it.

Disconnect the coolant pipes (12, 13 and 16) from the radiator (11).

Vehicles with an air-conditioner in the cab should have the electrical connection (9) disconnected from the drier filter.

Disconnect the electrical connection (16) of the fan switch.

Unscrew the air filter bracket fasteners (17) to help extract the air intake pipe (18) from the duct (15) on the radiator assembly.

Unscrew the four screws (6) and remove the heat-exchanger radiator assembly (11).

For vehicles with an air-conditioner in the cab:

- Put the radiator, with condenser and drier filter, back into the engine bay, taking care not to put the air-conditioning system pipes under tension.

Disconnect the coolant pipes (2-19-20-21-22) from the relative pipes on the engine.

Disconnect the electrical connection (4).

Unscrew the nuts (5) and remove the expansion tank (3).

This figure refers to a vehicle provided with additional heater **A**.

Figure 2

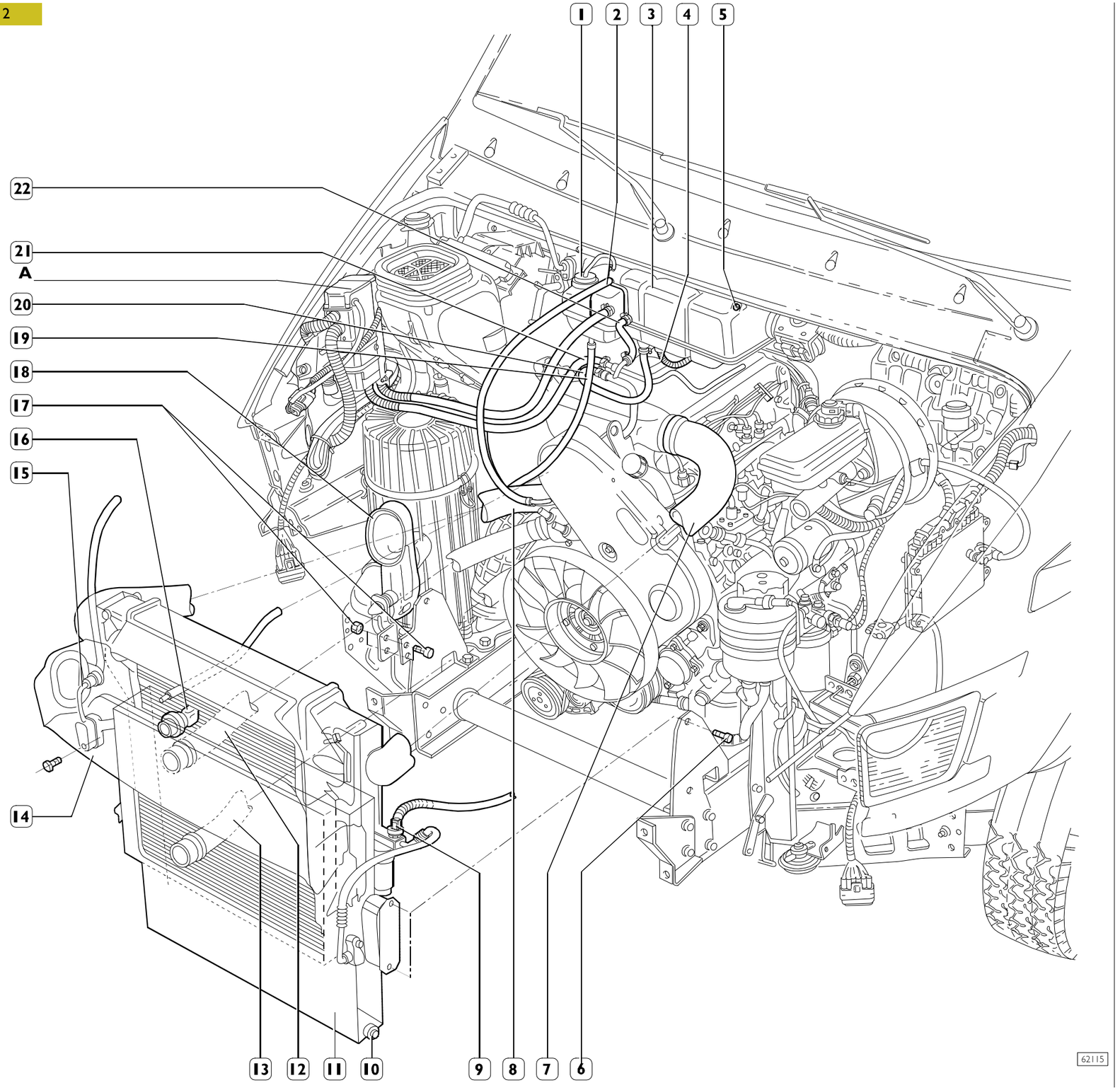

Disconnect the electrical connections of the engine cable:

- ❑ (4), from the fascia wiring;
- ❑ (6), from the chassis frame cable;
- ❑ (7), from the electronic control unit;
- ❑ (8), of the earthing cable on the engine;
- ❑ (14), from the low engine oil level indicator;
- ❑ (25) from turbosupercharger actuator control solenoid valve (engine 8140.43N only);
- ❑ (13), from the diesel filter.

Disconnect the electrical connection (1) from the thermostart glow plug.
Disconnect the electrical connection (2) from the thermostart solenoid valve.

The remaining electrical connections of the engine cable should be disconnected from the relative electric components after removing the engine (see Figure 5).

Unscrew the screws (3) to free the engine cable from the body.

Disconnect the fuel pipe (11) from the high-pressure pump.

Disconnect the fuel recovery pipes (9 and 10).

Disconnect the pipe (12) from the vacuum pump.

Place a container under the power steering pump to recover the oil from the system. Then disconnect the oil inlet and outlet pipes (15 and 16).

Disconnect oil vapour piping (23) from flow control valve (for EGR versions only).

Disconnect air intake duct (22) from turbosupercharger.

Disconnect pressure pipe (24) from turbosupercharger actuator control solenoid valve (engine 8140.43N only).

Close the turbocharger air outlet appropriately to prevent foreign bodies accidentally getting inside and damaging it.

Attach the rocker arm 99360550 (5) to the lifting hooks on the engine. Hook it onto the hoist and put the engine slightly under traction.

Vehicles with air-conditioning in the cab should have the compressor (20) disconnected as follows:

- ❑ loosen the nut (17);
- ❑ unscrew the tightener screw (18);
- ❑ remove the drive belt (21);
- ❑ take out the screws (19) and put the compressor (20) back into the engine bay without disconnecting it from the system pipes.

Figure 3

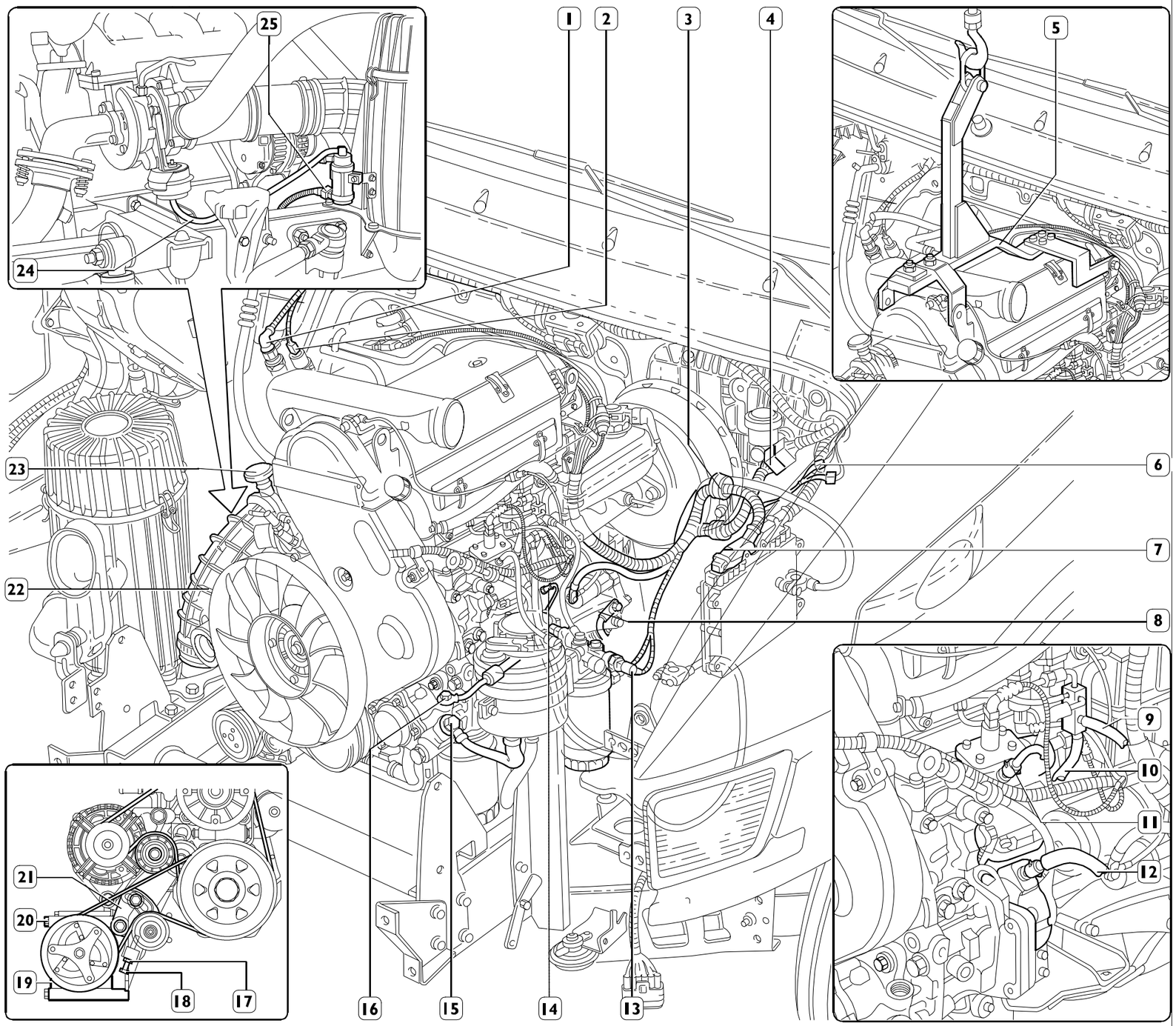

Remove the sealing from the ring nut (1), unscrew it and disconnect the speedometer control cable.

Disconnect the electrical connection (4) from the reversing light switch.

Unscrew the screws (3) securing the propeller shaft (2) to the gearbox. Fasten the propeller shaft to the chassis frame appropriately.

Unscrew the screws (6) and the screw (5). Remove the crosspiece (7) supporting the gearbox complete with plug.

Disconnect the exhaust pipe (9) from the turbocharger outlet pipe.

Disconnect the screws (16 and 18) securing the brackets (15 and 17) and disconnect the "bowdens" (14 and 19) from the gearbox.

Unscrew the screws (20), move the clutch control cylinder (21), with its bracket, and fasten it to the chassis frame appropriately.

Remove the nuts (13) for the screws securing the engine brackets to the structural members and take out the screws.

Lift the engine assembly and take it out of the engine bay.

The engine should be taken out of the engine bay extremely carefully so as not to damage the top pipe of the power steering and the heatproof-soundproof covering of the engine bay.

Figure 4

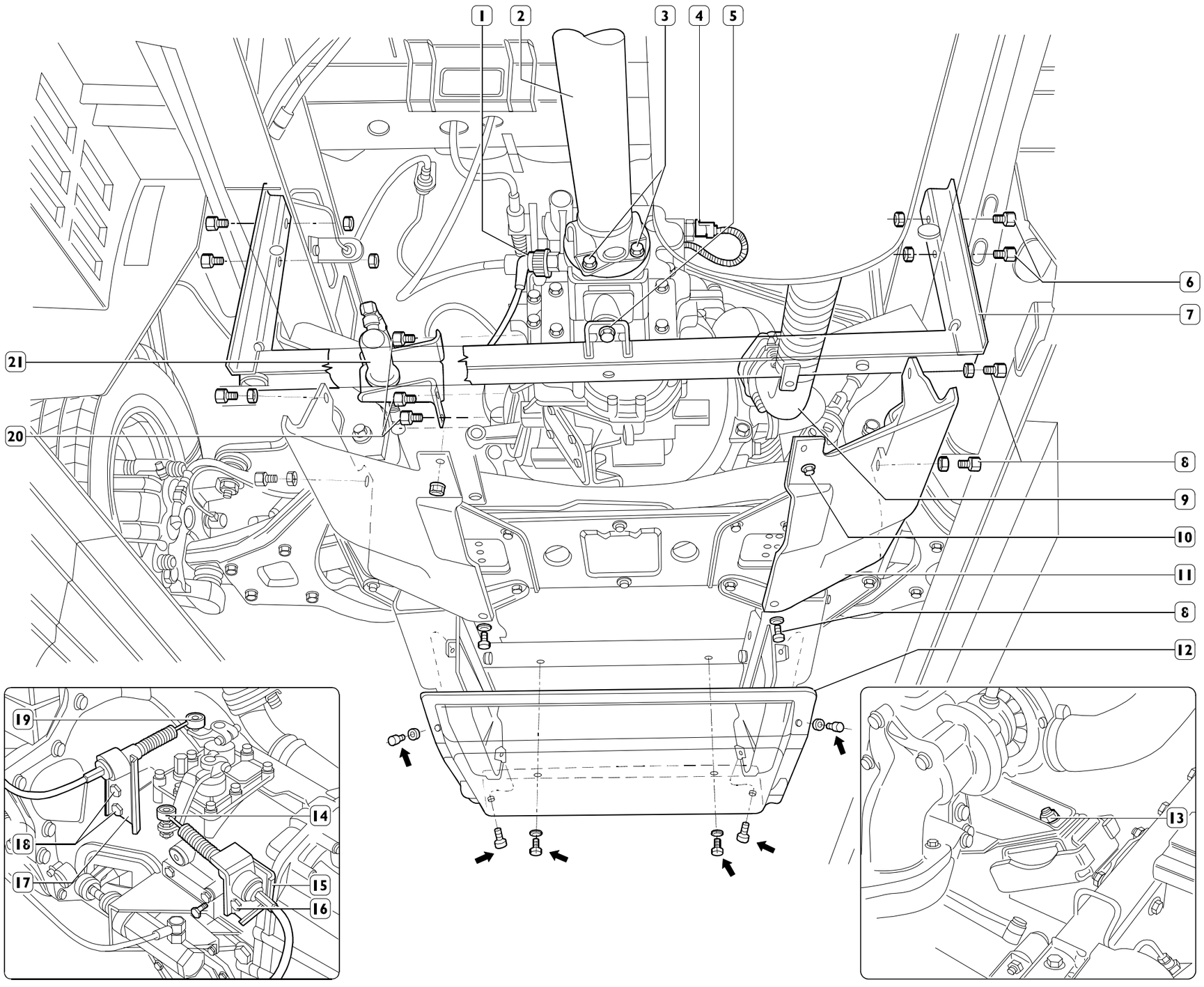

Figure 5

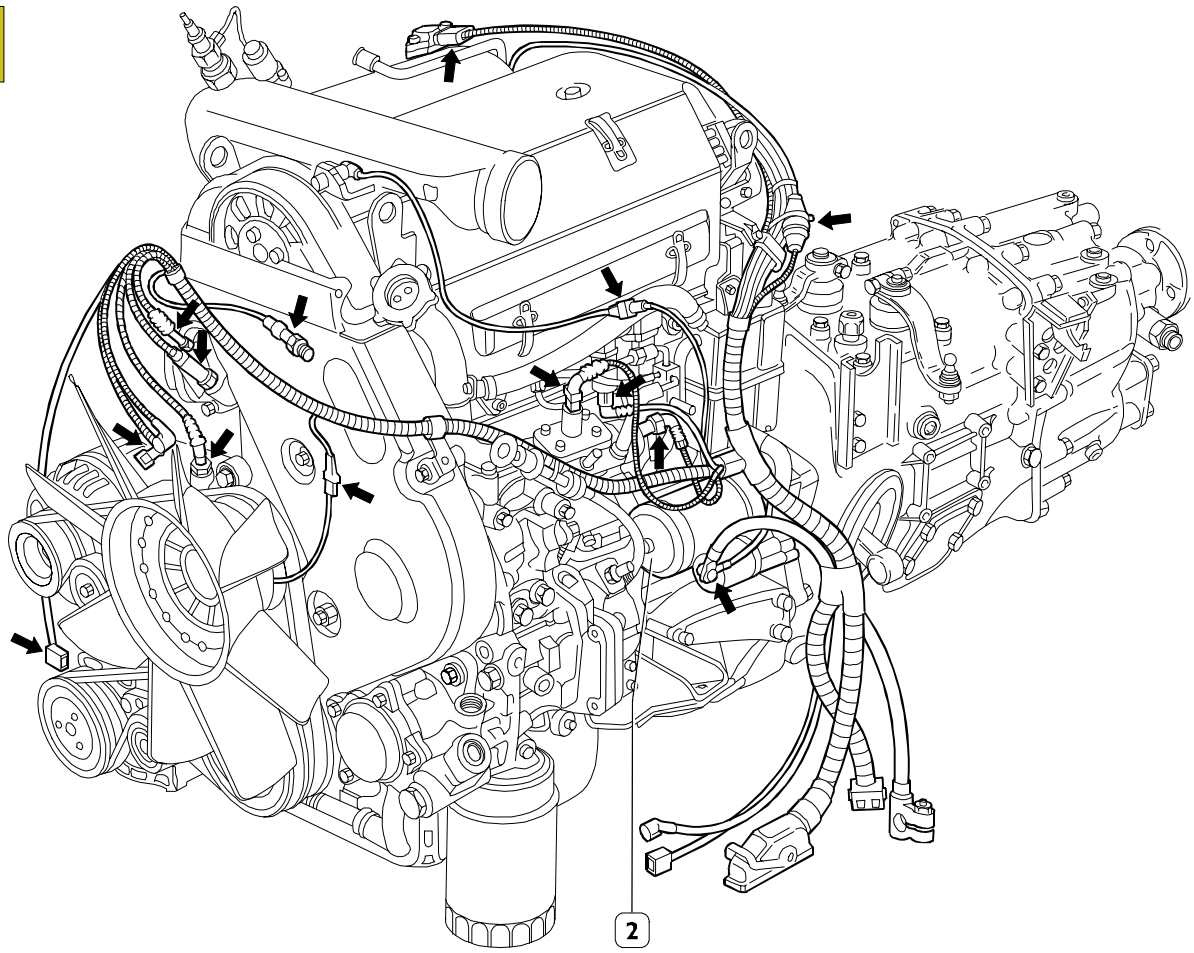

50956

Disconnect the electrical connections (⇒) of the engine cable from the relative electric components.

Detach the gearbox from the engine as follows:

- ❑ stand the engine on a workbench so it is sufficiently stable;
- ❑ disconnect the starter motor (2) and the bottom guard (1, Figure 6) from the gearbox;
- ❑ set the stand 99370620 on a hydraulic lift and apply it to the gearbox;
- ❑ take out the screws securing the gearbox to the engine;
- ❑ disconnect gearbox from engine.

Figure 6

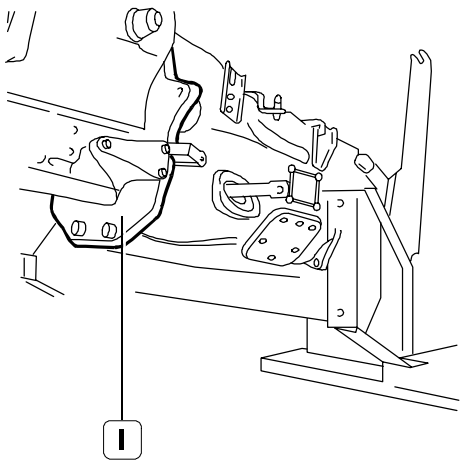

62853

In case of difficulty, take the inspection cover off the front cover of the gearbox.

Using special pliers, open out the split ring retaining the thrust-bearing sleeve to the clutch plate and at the same time disconnect the gearbox from the engine.

Removal (Engine 8140.43C - 8140.63)

Figure 7

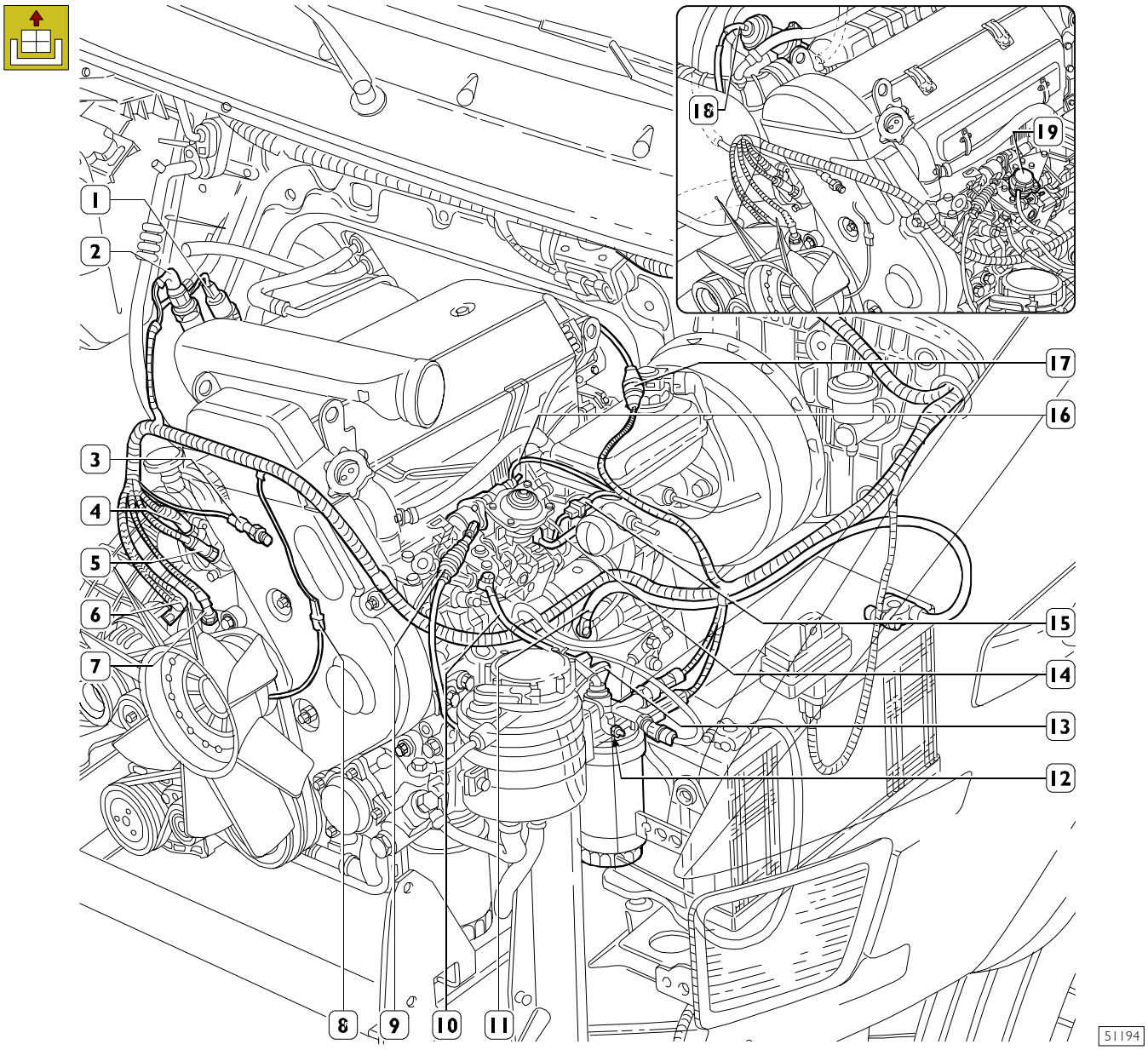

This differs from engine removal for the 8140.43S as there is no engine cable or electric components connected to it and in the following.
Disconnect the electric cables:

- ❑ (1), from the thermostart solenoid valve;
- ❑ (2), thermostart glow plug;
- ❑ (3), insufficient engine oil pressure indicator;
- ❑ (4), coolant temperature indicator;
- ❑ (5), temperature switch for K.S.B. and thermostart;
- ❑ (6), alternator;
- ❑ (7), temperature switch;
- ❑ (8), electric fan;
- ❑ (11), starter motor;
- ❑ (15) electric stop;
- ❑ (16), K.S.B.;
- ❑ (17), engine speed sensor.

Disconnect the throttle cable (9) from the injection pump and from the bracket.
Disconnect the fuel pipes (10 and 14) from the injection pump.

8140.63 (aspirated) engine only:

- ❑ (18), vacuum pipe from EGR valve;
- ❑ (19), EGR potentiometer electric cable;
- ❑ Disconnect the glow plug electrical connection from the control unit in the engine bay, above the battery.

The engine should be taken out of the engine bay extremely carefully so as not to damage the top pipe of the power steering and the heatproof-soundproof covering of the engine bay.

Refitting

To refit the power unit, reverse removal operations and observe the following indications:

- ❑ before refitting gearbox to engine, remove thrust bearing (2, Figure 6) from diaphragm spring (3, Figure 6) by opening circlip (4, Figure 6).
  Fit thrust bearing (2, Figure 6) on input shaft cover sleeve and connect it to clutch disengagement lever. Smear input shaft with Molikote molybdenum disulphate grease.
  Engage a speed to rotate main shaft by rotating propeller shaft flange. Push down the gearbox to properly engage thrust bearing (2, Figure 6) into diaphragm spring;
- ❑ take the utmost care when refitting the power unit into engine compartment;
- ❑ check the conditions of the coolant pipes or sleeves and of the air conveyors. Replace them if they show any sign of deterioration;
- ❑ check the flexible mountings of the assemblies: engine and gearbox. Replace them if they show any sign of deterioration;
- ❑ check that the exhaust pipe members have not deteriorated and are not about to deteriorate. If this is so, replace them along with the flexible parts for securing them;
- ❑ tighten the screws or nuts to the required torque;
- ❑ meticulously check the state of the vacuum pipe. It must show no sign of cracking, cutting, scoring or of being crushed. Replace it if there is any doubt at all about its soundness. When mounting it, make sure the pipe does not come into contact with sharp metal parts or corners or with any particularly hot parts. In addition, after assembly, the pipe must have no bends or constrictions, its radius of curvature should be broad and it must be secured to the vacuum pump fitting with a suitable clamp;
- ❑ fill the cooling system with coolant.
- ❑ make sure that the quick-coupling fittings of the fuel pipes are carefully cleaned and that, after their connection to the relevant unions of the high-pressure pump or of the fuel filter mounting, they are fully inserted and do not get disconnected.
- ❑ bleed the fuel supply system as described in the relative paragraph (only for engines 8140.63.4... - 8140.43C.4...);
- ❑ fill the power steering circuit and bleed the air as described in the relevant paragraph;
- ❑ check the level of oil in the engine and gearbox;
- ❑ adjust the tension of the drive belt of the compressor for the air-conditioner as described in "Replacing Belts" (if present).

When positioning the engine in the engine bay, take special care not to damage the top pipe of the power steering and the soundproof-heatproof cladding of the engine bay.
Once positioned, meticulously check that the top pipe of the power steering is sound.
Before using it again, check that the power steering oil and coolant contain no impurities. If they do, filter with suitable mesh filters. For any topping up, refer to the REPLENISHING FLUIDS table in the "GENERAL" section.

Figure 8

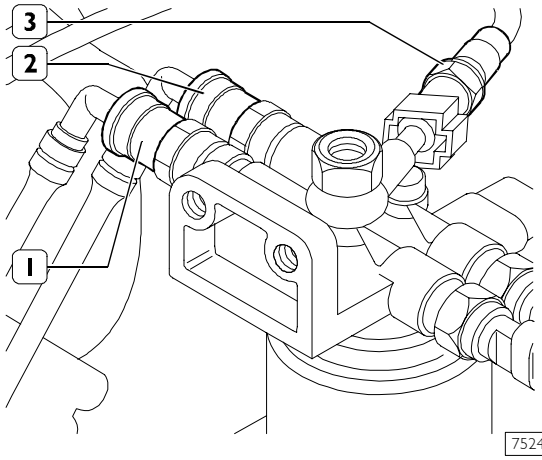

FUEL PIPES
1. High-pressure pump fuel pipe fast coupling - 2. Fuel supply pipe fast coupling 3. Fuel return pipe fast coupling - 4. Fuel filter mount.

If the fuel pipes (1-2-3) get disconnected from the mount (4), it is necessary, when refitting, to make sure their couplings are thoroughly clean. This is to prevent getting a bad seal and fuel leaking out as a result.

Checks and tests

Start up engine, leave running at a speed slightly in excess of idle speed and wait for coolant to heat sufficiently to open thermostat. Then check the following:

- ❑ no coolant leaks from coolant hose and cab interior heating hose connection sleeves. Tighten hose clips, if necessary;
- ❑ no oil leaks from between cover and cylinder head, oil sump and crankcase, oil filter and housing, heat exchanger and crankcase or from lubrication circuit lines;
- ❑ no fuel leaks from injection pump and injector lines. Tighten fittings if necessary;
- ❑ check that the indicator lights on the instrument panel and relating to the devices disconnected when the engine was removed are working properly.

542011 Bleeding the fuel system (see Figure 7) 8140.43C - 8140.63 engines only

Loosen bleed screw (12), operate priming pump lever (13) until complete bleeding of all the air in the system, tighten bleed screw.

If the engine stops for lack of fuel, resulting in air being introduced into the system (and if the bleeding process described above is no sufficient), it is necessary to loosen the unions of at least two injectors, rotate the engine and start it.
When the air has been bled off, close the unions again.

501430 Power steering system air bleed

Check the level of oil in the tank and top it up if necessary.
Lift the vehicle at the front, start up the engine and let it idle for some time.
Check there is no oil leakage from the hydraulic circuit and check the level in the tank.
Slowly turn the flywheel in both directions of steering so that the air in the hydraulic system comes out.
Check the level of oil in the tank again and top up if necessary.

507130 OXICAT - OXYDIZER CATALYST (Vehicles with 8140.43C - 8140.63 engines)

Description

The oxidizing catalyst (1) is a post-treatment device for exhaust gases. It is used to oxidize CO, HC transforming them into carbon dioxide (CO_2) and steam (H_2O).

This catalyst also treats saturated and aromatic hydrocarbons forming part of the particulate, such as the carbon in the form of soot, metals, water and sulphur compounds that are exhausted.

The cylindrical-shaped catalyst consists of a ceramic honeycomb monolith whose cells are platinum-impregnated, a catalyzing substance of oxidation reactions. Its total volumetric capacity is equal to 600 cm^3 with a density of 400 cells per square inch.

The exhaust gases passing through the cells heat the catalyst, converting the pollutants into inert compounds.

The chemical oxidation reaction of CO, HC and of the particulate is efficient with temperatures ranging between 200°C ÷350°C.

With temperatures higher than 350°C it starts oxidizing the sulphur contained in the diesel oil, generating sulphur dioxide (SO_2) and sulphur trioxide (SO_3), which are the cause of acid rain.

Correct catalyst sizing enables limiting the temperature, obtaining the greatest percentage of conversion of polluting emissions, while reducing the freezing of sulphur compounds.

Figure 9

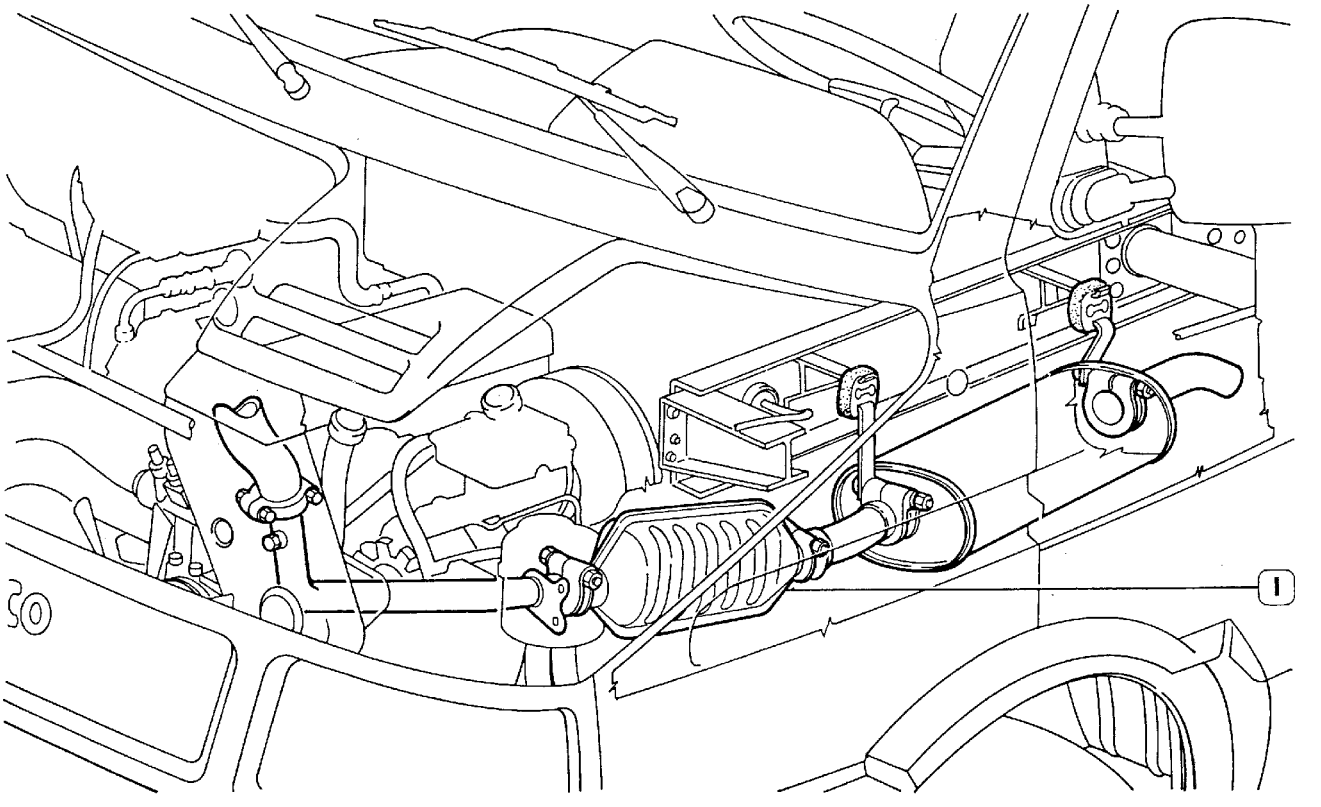

540610 Cylinder head removal and refitting

Figure 10

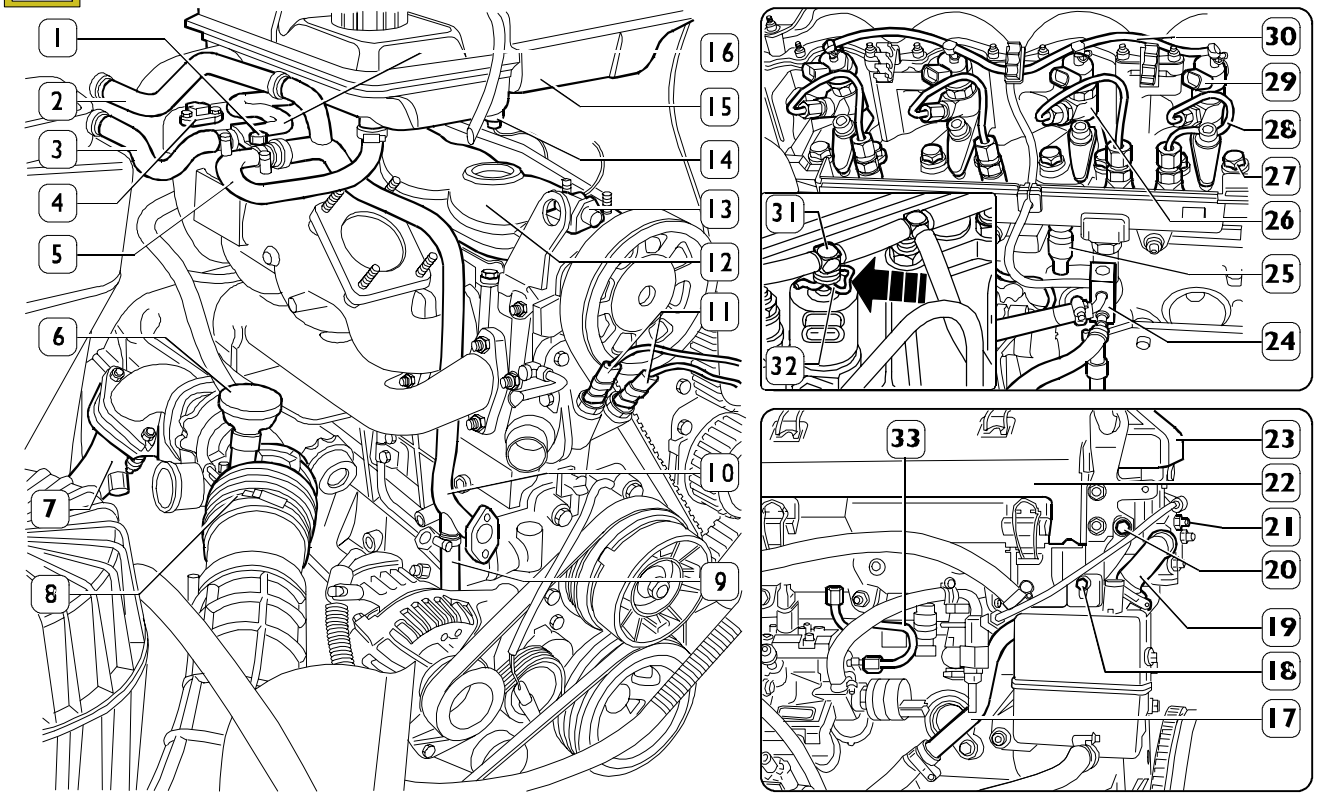

Removal

Remove the timing belt as described under the relevant heading (operation 541257).

Disconnect the electrical connections from the:

- ❑ cooling temperature indicator (11);
- ❑ "KSB" temperature switch (8140.63/43C engines only) and/or thermostart;
- ❑ air temperature and pressure sensor (4) (8140.43B/R/S engine only);
- ❑ expansion tank level indicator (14);
- ❑ disconnect the coolant pipes (2, 3 and 5);
- ❑ remove the expansion tank (15);
- ❑ remove the coolant pipes (10) from the water pump and from the heat exchanger pipe (9);
- ❑ take out the screw (1) and the nut securing the bracket fixing the pipes (10 and 16) to the inlet manifold;
- ❑ extract the oil vapour recirculation valve (6) from the duct (8) (8140.63 engine only);
- ❑ remove the exhaust pipes (7) from the turbocharger (8140.43C - 8140.43B/R/S engines only);
- ❑ remove the turbocharger (8140.43B/R/S/43 C engines only) from the inlet manifold;
- ❑ remove the pipe (19) from the rear cover of the cylinder head;
- ❑ take out the screw securing the engine electric cable bracket;
- ❑ take out the screw (20) securing the pipes (17) to the cylinder head;
- ❑ take out the screw (18) securing the oil vapour condenser;
- ❑ remove the top (23) and side (22) soundproofing;
- ❑ disconnect the electrical connections:
  (29) from the electro-injectors (26) (8140.43B/R/S engines only);
- ❑ (13) from the engine speed sensor (8140.43B/R/S and 8140.63 engines only);
- ❑ from the glow plugs (8140.63 engine only);
- ❑ from the fuel pressure sensor (25) (8140.43B/R/S engines only);
- ❑ remove the tappet cover.

8140.43B/R/S engines only

Disconnect fuel recovery pipe (28) from connection (24).
Press clamps (32) and lift connections (31) at the same time, disconnect connections and pipes (28) from electroinjectors (26).
Disconnect the fuel pipes (28) from the electro-injectors (26) and from the hydraulic accumulator. Take out the screws securing the electro-injector brackets (20).
Remove the electro-injectors (26) from the cylinder head.

Disconnect the pipe (33) from the high-pressure pump and from the hydraulic accumulator.

8140.43B/R/S engine excluded

Disconnect the fuel pipes from the injection pump and from the injectors.

Disconnect the fuel recovery pipes from the injectors.

- ❑ Disconnect the LDA pipe from the inlet manifold (8140.43 C engine only).
- ❑ Take out the screws (27) and remove the cylinder head with its gasket.

Refitting

Refitting requires carrying out the operations for removal in reverse order, while taking the following precautions:

Check that the piston of cylinder No. 1 is at TDC.

Check that the mating surfaces of the cylinder head and crankcase are clean.

Keep the cylinder head gasket clean.

Position the cylinder head gasket, of the thickness determined in the "checking piston protrusion" paragraph, with the lettering "HIGH" facing the cylinder head.

It is essential to keep the gasket sealed in its package until just before assembly.

Before reusing the cylinder head fixing screws, measure their thread diameter to check it is no less than 11.5 mm at any point. If this is not so, replace them.

Turn the camshaft so that the valves of cylinder No. 1 are shut.

Mount the cylinder head. Insert the screws and tighten them, in three successive stages, following the order and method shown in the following figure.

The angle closure is done with tool 99395216.

Figure 11

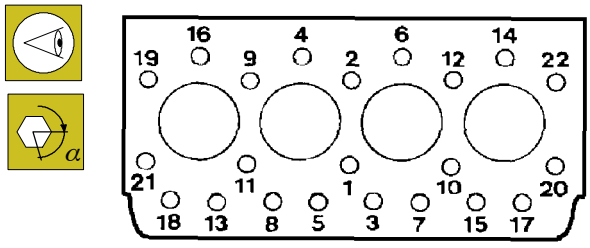

6448

Tightening order diagram for cylinder heads fastening screws:

- ❑ 1st step: pre-tightening with torque wrench to torque of 60 ± 5 Nm;
- ❑ 2nd step: return to torque of 60 ± 5 Nm;
- ❑ 3rd step: closing with 180° ± 10° angle.

Figure 12

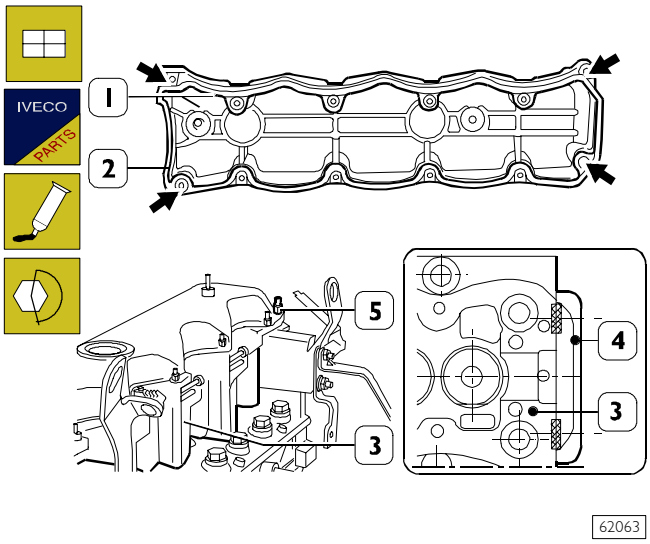

62063

Clean spaces between rear cover (4) and cylinder head (3) from sealant residues and refill with IVECO 1905685 sealant.

Fit seal (2) on tappet cover (1). Smear tappet cover corners (⇒) with Silastic 732 RTV (approx. 10g). Refit tappet cover on cylinder head and tighten fixing nuts (5) to the specified torque.

Check the speed sensor is mounted as described under the relevant heading (8140.63 - 8140.43 S engines only).

When fitting the fuel pipes, don't use the metal clamp with the flexible plug and fixing screw. Replace them with new parts (8140.63 - 8140.43C engines only).

REPLACING BELTS

Figure 13

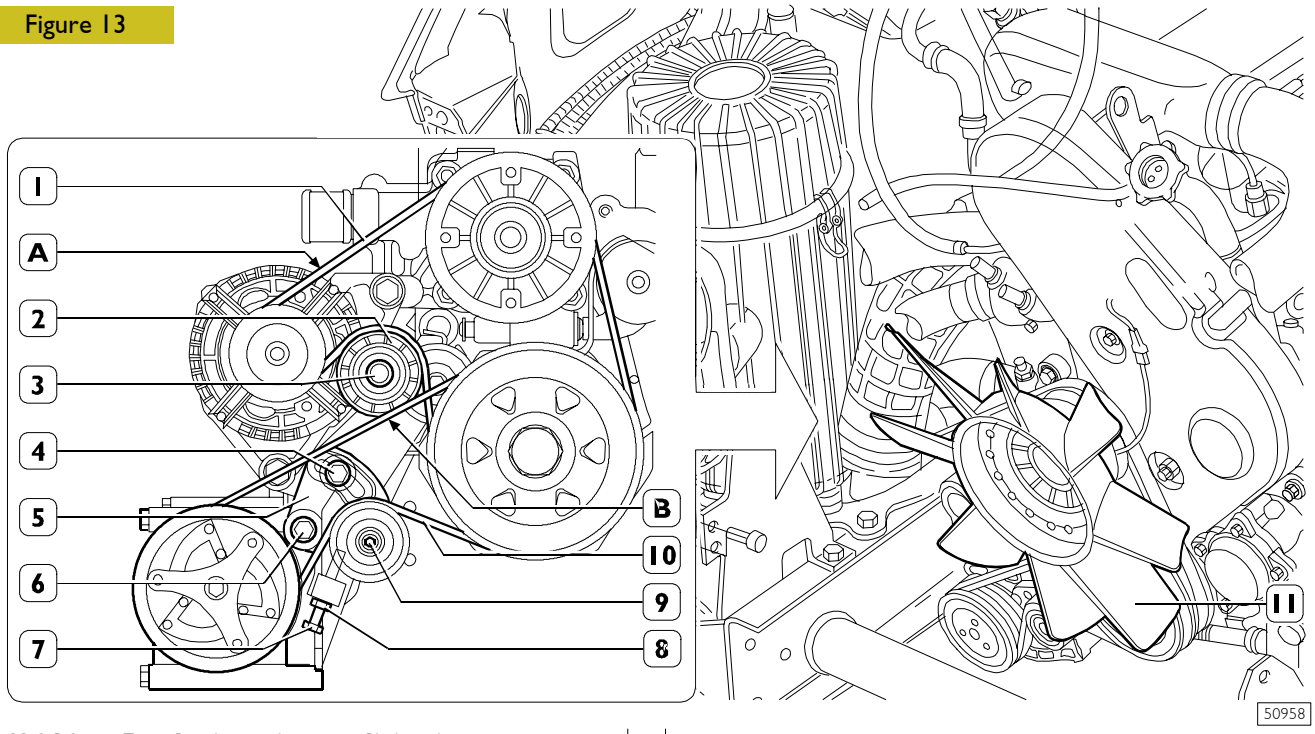

543910 Replacing air-conditioning compressor drive belt

Disassembly

Set the vehicle on a lift or over a pit.
From underneath the vehicle, detach the central soundproofing guard.

Loosen the screws (4 and 6) fixing the tensioner (5) and the nut (8).
Remove the belt (10) driving the compressor.

Assembly and adjusting belt tension

Mount the drive belt (10), taking care to position its ribs properly in the respective races of the pulleys.
Turn the screw (7) to lightly tension the belt (10).

Turn the crankshaft by one turn. Using the appropriate instrument, check that in section **B**, compressor/crankshaft, the frequency is 160 ± 10 Hz, corresponding to a load of 500 ± 50 N.

If this is not so, turn the screw (7) appropriately. Lock the screws (4 and 6) at the required tightening torque.
Unscrew the screw (7) by two turns and lock the nut (8) at the required torque.
Mount the radiator assembly and the remaining parts as described for refitting the engine assembly.

543411 Replacing water pump - alternator drive belt

Disassembly

Disassemble the compressor drive belt, if there is one, as described under the relevant heading.
Cancel the action of the automatic tightener (2) with the screw (3) and remove the water pump - alternator drive belt (1).

Assembly and adjusting belt tension

Mount the drive belt (1) taking care to position its ribs correctly in the respective races of the pulleys.
Turn the screw (3) to release the automatic tightener (2).
Turn the crankshaft by one turn to settle the belt.
With suitable equipment, measure the tension of the belt (1) in the section **A**, crankshaft / water pump / alternator, that should be 140 ± 5 Hz.
Mount the compressor drive belt, if there is one, and adjust the tension as described under the relevant heading.

543411 Changing the timing system driving belt

Disassembly

Following the procedures described for removing the engine, take out the radiator assembly without disconnecting the air-conditioning system pipes from the condenser and from the drier filter and put it suitably aside in the engine bay.

For this operation it is not necessary to remove the bumpers, it is sufficient to remove the air duct from the radiator and, for vehicles with engine 8140.63, to remove the screws securing the intake filter air inlet to the radiator.

Figure 14

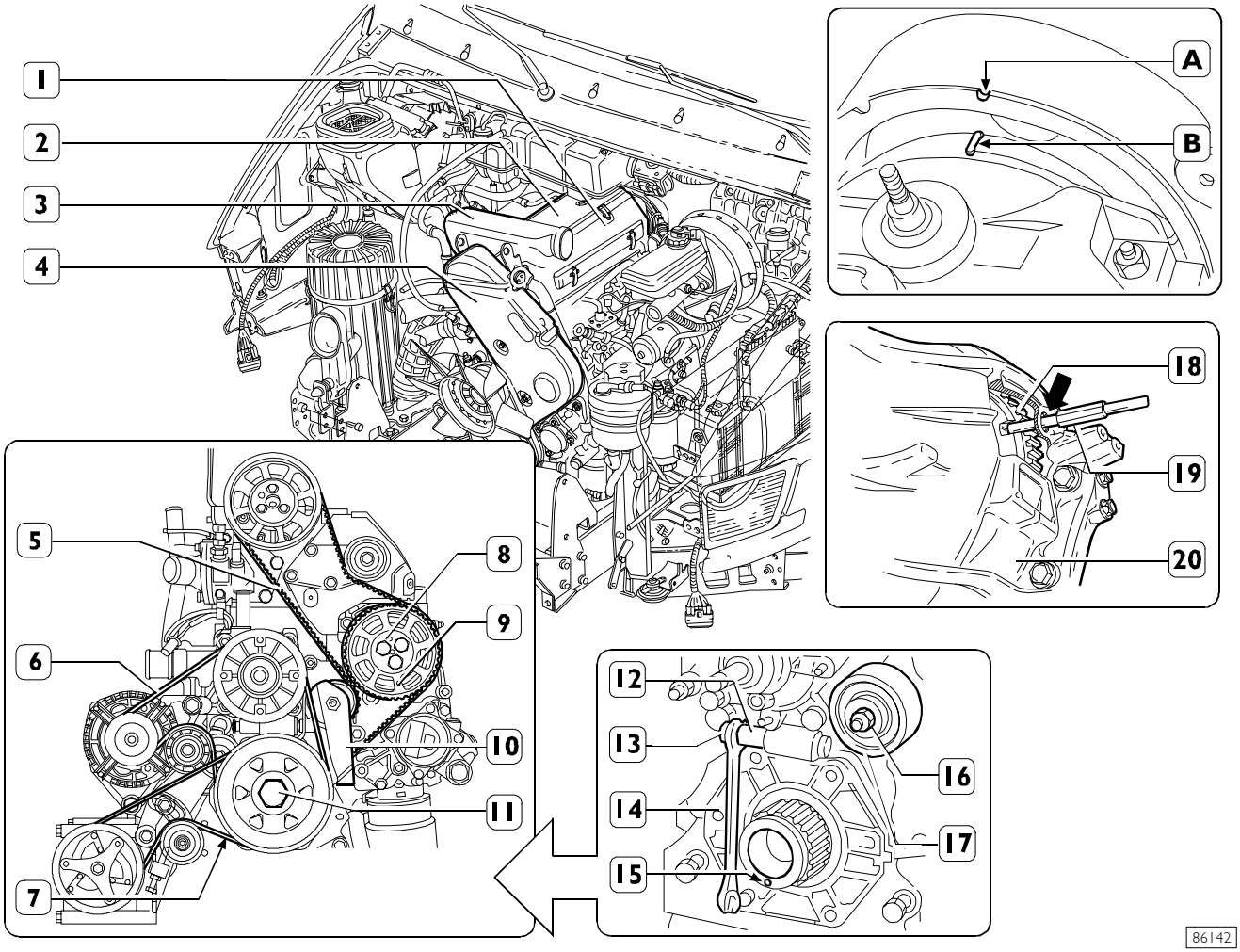

Removal

Remove the air-conditioner compressor drive belt (7) (if there is one) and the water pump / alternator drive belt (6) as described under the relevant headings.
Remove the transverse air duct (3) without disconnecting the fuel pipe from the solenoid valve and the electric cables. Put it appropriately to one side in the engine bay (8140.63 engine excluded).
Take out the screw (11) securing the pulley and remove this from the crankshaft.
Remove the top (2) and side (1) soundproofing covers, if present.
Remove the top timing cover (4).
Arrange the engine so that cylinder piston 1 is at firing stroke TDC as follows.
Insert tool 99360608 (19) in hole (⇒) of transmission cover (20) from underneath the vehicle.
Turn the crankshaft slowly in the direction of rotation until the following conditions occur:
1) hole (15) of the crankshaft timing gear is facing downwards;
2) references **A** and **B** on the tappet cover and on the camshaft pulley coincide;
3) tool 99360608 (19) is inserted in the engine flywheel groove (18).

For engines 8140.43C - 814063 only (engines with rotary injection pump), in these conditions, stop the injection pump pulley (9) from turning by inserting another 99360608 tool through hole (8) and that of the auxiliary unit.

Remove the nut (16) securing the belt-tightening roller (17). Remove the bottom timing cover (10). Insert a special wrench (12) between the pin (14) and the push rod (13) so as to cancel its pressure on the belt-tightening roller (15). Remove the timing belt (5).

When removing the cogged belt after travelling ≥ 30000 km, replace it no matter what its state of efficiency.

Figure 15

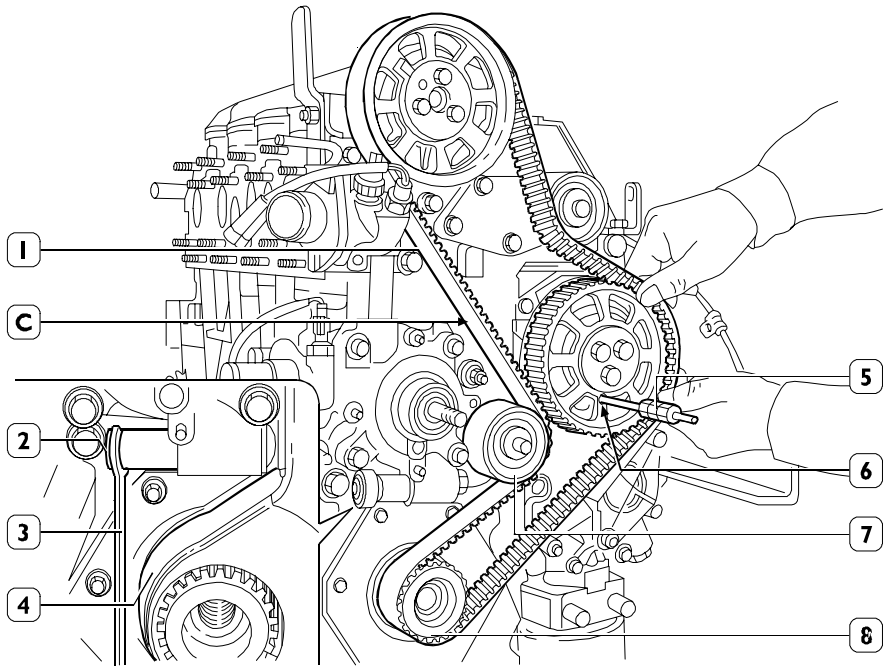

50960

Replace the front crankshaft cover in the event of leakage as shown in the respective section (operation 540440).

Refitting

Mount the cogged belt (1).
Mount the bottom cover (4) and tighten the fixing screws to the required torque.
Remove the wrench (3) so that the push rod (2), acting on the belt tightener (7), tensions the cogged belt (1).
8140.43C - 8140.63 engines only.
Remove the tool 99360608 (5).

Check timing as follows.
Turn the crankshaft slowly in the direction of rotation by two turns and check that the conditions illustrated in removal procedure 1-2-3 are fulfilled when the timing belt is taut.

For 8140.43C - 814063 engines, in these conditions, check injection pump pulley timing by inserting tool 99360608 (5) through the pulley hole (6) and that of the auxiliary unit.

Tighten the nuts securing the tightener roller (7) at the torque of 37 ÷ 45 Nm.

Use tool 99395849 to check timing belt tension (1) which must be as follows in point **C**:

- engines 8140.43R/B/S/N: 90 -115 Hz;
- engines 8140.43C - 8140.63: 88 - 112 Hz.

Then complete refitting by carrying out the operations described for removal in reverse order.

543210 REPLACING WATER PUMP

Figure 16

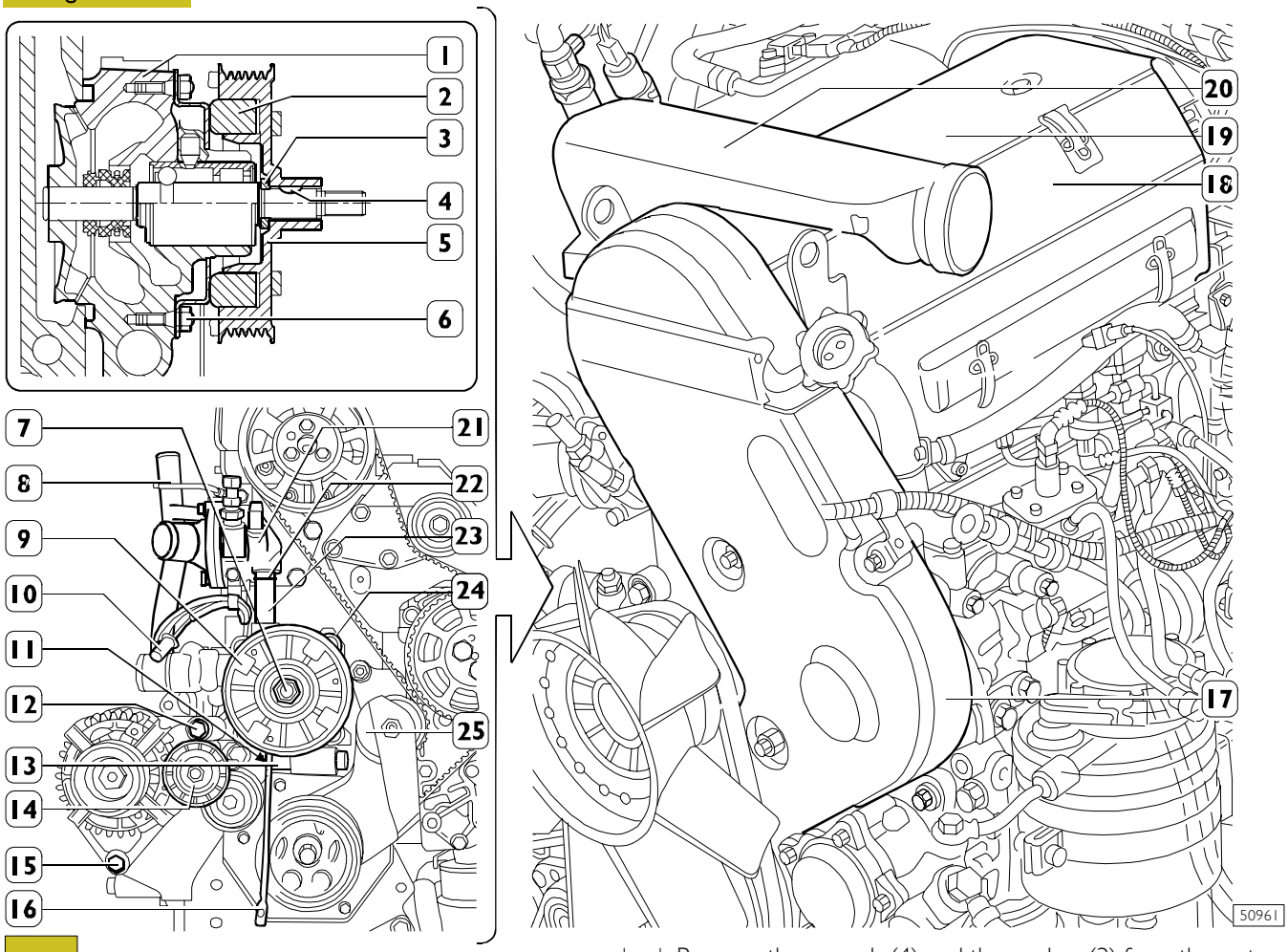

Disassembly

Disassemble the compressor drive belt (if there is one) and the water pump drive belt as described under the relevant headings.
Remove the air manifold (20) without disconnecting the electric cables and the fuel pipe from the solenoid valve - thermostart glow plug in the engine bay.
Remove the side (18) (if present) and top (19) soundproofing covers from the cylinder head.
Remove the timing belt cover (17).
Remove the automatic tightener (14). Loosen the screw (15) for the nut securing the alternator to the mounting.
Take out the screw (12) securing the alternator to the water pump (1).
Insert a special wrench (16) between the pin (13) and the push rod (11) so as to cancel its pressure on the tightener roller (25).
Take out the screws securing the piping (8) to the water pump (1).
Disconnect the electromagnetic pulley electrical connection (10).
Stop electromagnetic pulley (5) rotation using the proper tool.
Unscrew clockwise (7) hub retaining nut (9) and remove the hub.

The nut (7) retaining the hub (9) has a left-hand thread.

Remove the wrench (4) and the washer (3) from the water pump shaft (1) and take out the pulley (5). Remove the nuts and extract the electromagnetic coupling (2).
Shift the piston ring (22) downwards and insert the pipe (23) into the thermostat box so as to remove it from the water pump (1).
Take out the screws (24) and remove the water pump (1) from the crankcase.

Assembly

For assembly, carry out the operations for disassembly in reverse order, taking the following precautions:

- ❑ replace the seal rings of the pipe (23);
- ❑ clean the thread of the screws (24) and apply IVECO 1905683 sealant on their first 15 mm.

The hub locking nut (9) has a left-hand thread. The nut (7) must be replaced whenever disassembled.

Phase 1, tightening with torque wrench to a torque of 40 Nm.
Phase 2, closing with an angle of 110° ± 10°.

The angle closure is performed with tool 99395216.

775010 REPLACING INJECTORS (ENGINE 8140.63 - 8140.43C)

Figure 17

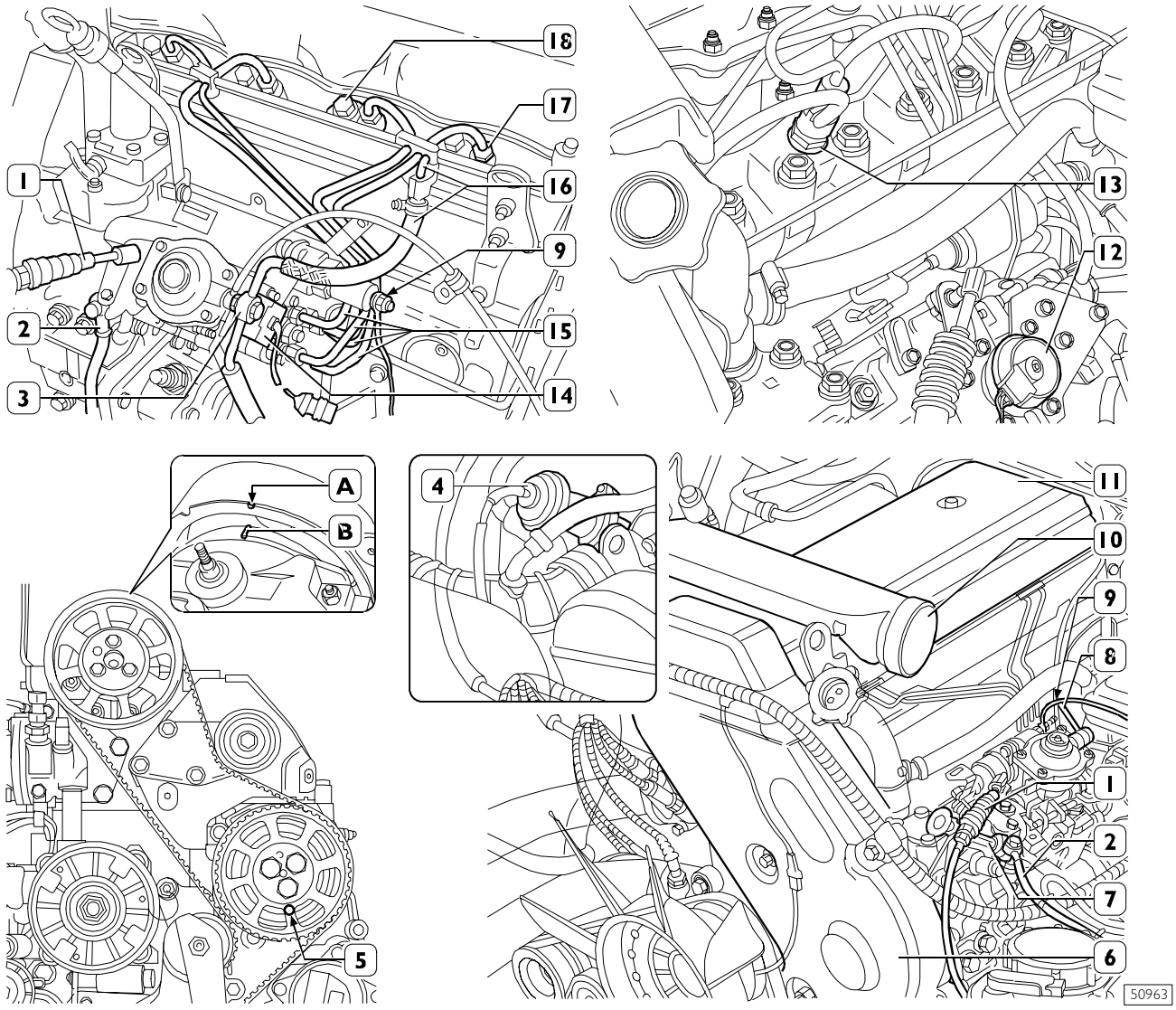

Disassembly

Remove the air manifold (10) from the inlet manifold without disconnecting the electric cables and the fuel pipe.
Put the air manifold (10) appropriately to one side in the engine bay. Take out the side soundproofing cover (if any) and the top cover (11). Remove the injectors (17 or 13), the fuel recovery pipe (16) and the fuel pipes (15). For engine 8140.43C, take out the screws (18) securing the injector brackets and remove the injectors from the cylinder head.
For engine 8140.63, unscrew the injectors (13).

Assembly

For assembly, carry out the operations described for disassembly in reverse order, taking the following precautions:

- ❑ tighten the injectors of engine 8140.63 at a torque of 60 Nm (6 kgm);
- ❑ bleed the fuel air as described under the relevant heading.

771010 REPLACING INJECTION PUMP

Disassembly

Remove the transverse air manifold (10) without disconnecting the fuel pipe and electric cables from the thermostart components. Put the transverse air manifold (10) appropriately to one side in the engine bay.
Remove the top (11) and side (if any) soundproofing covers.
Remove the timing cover (6). Turn the crankshaft so as to align the camshaft pulley mark **A** with the tappet cover mark **B**, making it possible to insert tool 99360608 into the hole (5) in the pulley and into the hole in the auxiliary member assembly. If this is not possible, turn the crankshaft by one turn.
Remove the pipe bracket for the oil dipstick (7) from the auxiliary member assembly.
Disconnect the following from the injection pump:

- ❑ Electric cables:
  - (9), KSB device.
  - (14), electrostop.
  - (12), EGR potentiometer (if present);

- ❑ fuel pipes (3 - 7, Figure 17);
- ❑ pipes delivering fuel to the injectors (15, Figure 17);
- ❑ vacuum pipe (8, Figure 17)
- ❑ bowden throttle control cable (1, Figure 17);

Disconnect the injection pump.

Having to refit the same injection pump that has been removed. Mark its assembly position on its mounting.

Connect the electric cable to the bulb (1, Figure 18) of the KSB device and power it with the voltage of the vehicle. This deactivates the KSB device.

From underneath the vehicle:

- ❑ remove the soundproofing guards of the engine/gearbox;
- ❑ disconnect the oil dipstick pipe (7, Figure 17);
- ❑ take out a nut securing the injection pump.

From the engine bay, take out the nuts securing the injection pump and remove the pump.

Assembly and injection pump adjustment

Figure 18

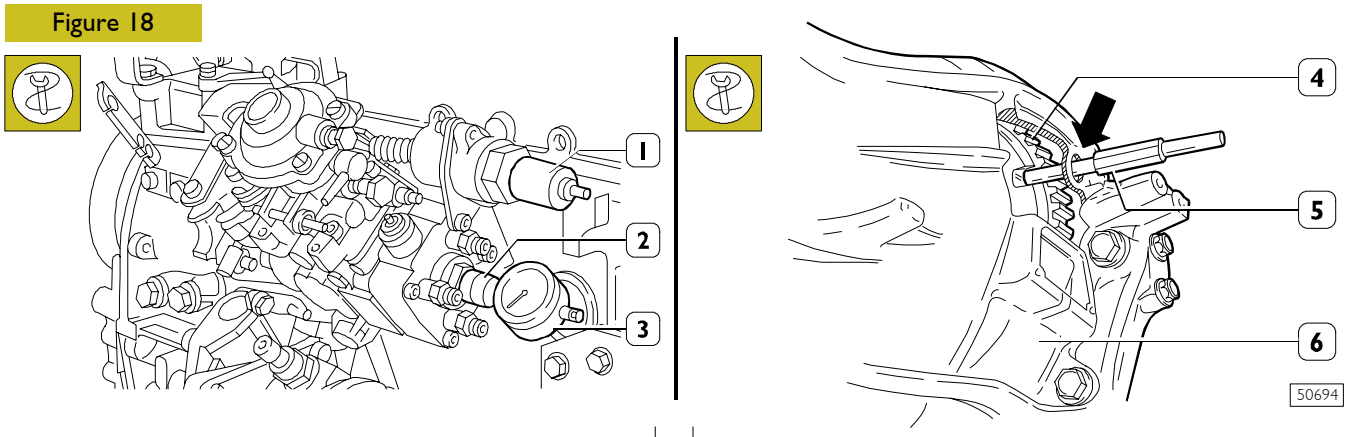

Take out the plug located on the pump closure screw and screw down tool 99395100 (2), with the rod in contact with the top of the timing piston.
Preload the dial gauge 99395603 (3) by approx. 3 mm.

Figure 19

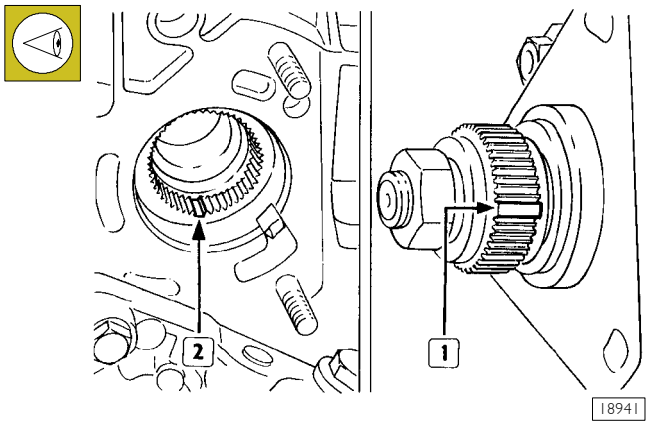

Having to replace the coupling (1), take the new part with the spare part number corresponding to the angle stamped on it.

Check the timing is correct.
Key the injection pump onto the auxiliary member assembly, making the groove (2), obtained in the pump drive shaft, with the protrusion (1) of the coupling. Screw down the nuts securing the pump without fully locking them.

The KSB device is deactivated when the timing advance control lever is no longer pulled.

Remove the tool 99360608 from the injection pump control pulley.
Turn the engine in the opposite direction to that of rotation until the injection pump timing piston reaches TDC, indicated by the dial gauge (3). Zero the dial gauge (3). Insert tool 99360608 (5) into the hole (⇒) of the gearbox cover (6).
Slowly turn the crankshaft in its direction of rotation to insert tool 99360608 (5) into the slot in the engine flywheel (4).
In the above condition, marks **A** and **B** (Figure 17) must coincide and the injection pump piston must have made the required travel. If this is not so, turn the pump body in its slot to obtain the required value shown by the dial gauge. Fully lock the nuts securing the pump to the auxiliary member assembly.

The injection pump fixing nut, crankcase side, is tightened with wrench 99352114.

Remove tool 99360608 (5).
Cut off supply to the KSB device.
Remove tool 99395100 (2, Figure 18) and screw the plug back onto the closing screw.
Finish mounting the parts removed, following the reverse order to disassembly.

540850 ENGINE FLYWHEEL REMOVAL-REFITTING

Removal

This operation includes:

- ❑ propeller shafts removal-refitting (see relevant section 505620)
- ❑ gearbox removal-refitting (see relevant section 530210)
- ❑ clutch removal-refitting (operation 505210).

For engines 8140.43C-8140.43 B/R/S proceed as follows:

Remove cylinder 1 injector (6) as specified in engine overhaul.

Fit tool 99395098 (2) with dial gauge 99395603 (1) into injector seat and secure it to cylinder head by clip (5) and screw (4).

Rotate the output shaft until reading piston (3) TDC position on dial gauge (1).

Apply gauge 99395214 (10) to engine block.

Operate on engine flywheel (13) to fit tool 99395214 (10) pin (11) into engine flywheel (13) milling.

Lock pin (11) by screw (12).

Figure 20

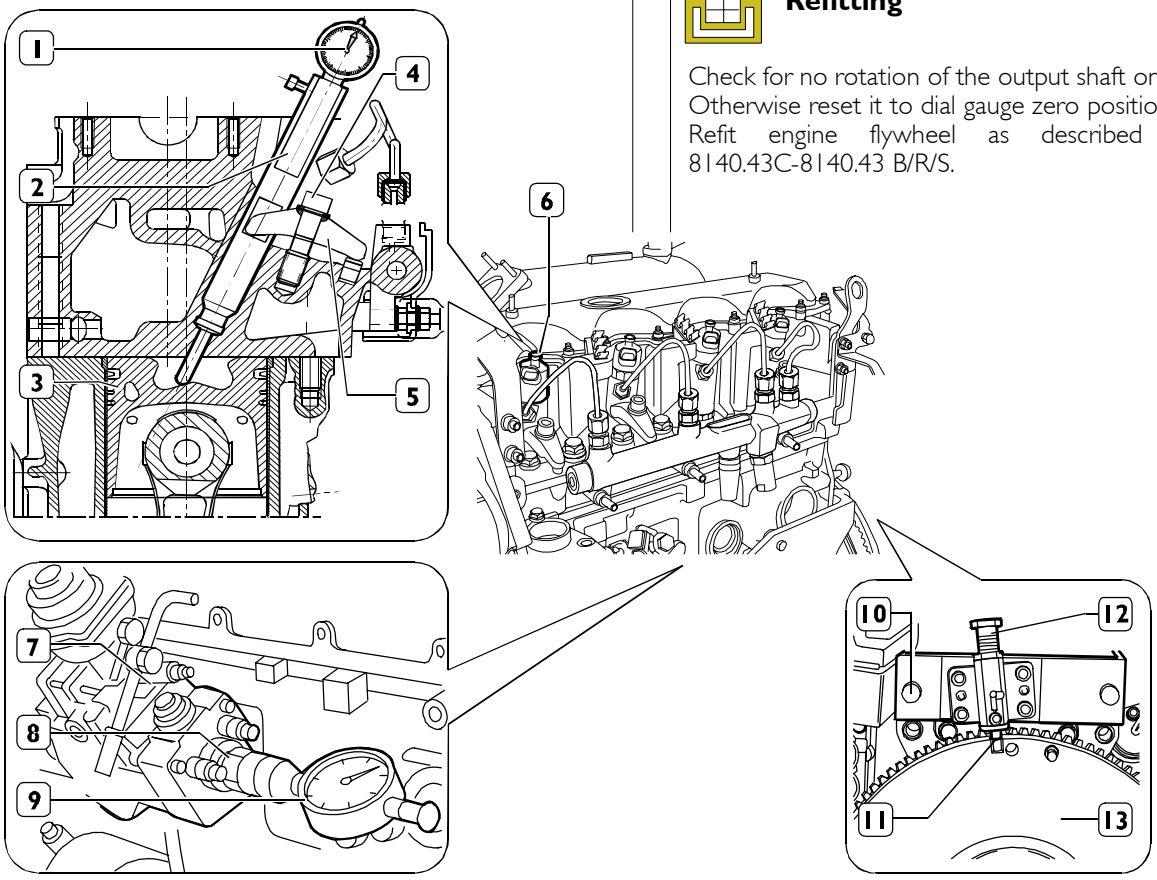

Remove the flywheel fastening screws, lift pin (11) from engine flywheel (13) milling and remove it.

Should rear cover leaks be found, replace the cover as described in the relevant chapter (operation 540460).

Refitting

Check on dial gauge (1) whether piston (3) is at TDC, otherwise operate on the output shaft to position it in said condition.
Position engine flywheel (13) on output shaft to fit tool pin (11) into flywheel milling and secure the fastening screws.
Tighten flywheel fastening screws to the required torque.
Refit injector as specified in engine overhaul.

For engines 8140.63:

Removal

Set cylinder 1 piston to TDC at compression stage (valves closed).
Fit tool 99395100 (8) including the dial gauge 99395603 (9) on injection pump (7) (after removing the plug); preload and set the dial gauge to zero.
Apply gauge 99395214 (10) to engine block and proceed as described for engines 8140.43C-8140.43 B/R/S.

Refitting

Check for no rotation of the output shaft on dial gauge (9). Otherwise reset it to dial gauge zero position.
Refit engine flywheel as described for engines 8140.43C-8140.43 B/R/S.

ENGINES WITH ELECTRONIC HIGH-PRESSURE INJECTION SYSTEM

ENGINE 8140.43R.43XX

ENGINE 8140.43B.43XX

ENGINE 8140.43S.41XX

ENGINE 8140.43S.43XX

ENGINE 8140.43N.43XX

5401 Engines with electronic high-pressure injection system

- ❑ **8140.43R.43XX**
- ❑ **8140.43B.43XX**
- ❑ **8140.43S.41XX**
- ❑ **8140.43S.43XX**
- ❑ **8140.43N.43XX**

	Page
EMISSIONS VALUES	31
❑ Engine 8140.43R.43..	31
❑ Engine 8140.43B.43..	32
❑ Engine 8140.43S.41..	33
❑ Engine 8140.43S.43..	34
❑ Engine 8140.43N.43..	35
GENERAL SPECIFICATIONS	40
ASSEMBLY DATA - CLEARANCES	43
TIGHTENING TORQUES	48
TOOLS	51
OVERHAULING ENGINE	59
DISASSEMBLING THE ENGINE AT THE BENCH	59
REPAIR OPERATIONS	65
CYLINDER BLOCK	65
❑ Checks and measurements	65
❑ Checking head mating surface on cylinder block	66
❑ Spare cylinder barrel fitting	66
CRANKSHAFT	68
❑ Measuring main journals and connecting rods	68
❑ Checking crankshaft	70
❑ Replacing gearbox input shaft centering ring	71
❑ Replacing timing control gear	71
ENGINE ASSEMBLY	71

Page

- ❑ Fitting main bearings 71
- ❑ Measuring main journals assembly clearances . . 72
- ❑ Checking crankshaft end float 73
- ❑ Checking alignment pulley crankshaft 73
- ❑ Rear crankshaft cover 73
- ❑ Front crankshaft cover 73

ENGINE FLYWHEEL 74

- ❑ Replacing bearing supporting gearbox input shaft 74
- ❑ Replacing engine flywheel ring gear 74

CONNECTING ROD - PISTON ASSEMBLY . . . 74

- ❑ Pistons 76
- ❑ Measuring the pistons diameter 76
- ❑ Piston gudgeon pins 76
- ❑ Conditions for correct pin-piston coupling 76
- ❑ Piston rings 77
- ❑ Connecting rods 78
- ❑ Bushes 78
- ❑ Checking connecting rod for distortion 78
- ❑ Checking torsion 79
- ❑ Checking bending 79
- ❑ Assembling connecting rod - piston assembly . . 79
- ❑ Coupling connecting rod - pistons 79
- ❑ Checking for connecting rod - piston distortion 80
- ❑ Fitting piston rings 80
- ❑ Fitting connecting rod - piston assemblies in cylinder barrels 80
- ❑ Measuring connecting rod assembly clearance . 81
- ❑ Checking piston protrusion 81
- ❑ Flywheel adjustment 82

CYLINDER HEADS 83

Page

- ❑ Dismantling camshaft 83
- ❑ Checks 83
- ❑ Checking cam lift and journal alignment 84

VALVE TAPPET 84

- ❑ Dismantling valves 84
- ❑ Checking cylinder head seal 85
- ❑ Checking cylinder head mating surface 85

VALVES 85

- ❑ Removing deposits, refacing and checking valves 85
- ❑ Checking clearance between valve stem and valve guide and centring valves 86

VALVE GUIDES 86

- ❑ Replacing valve guides 86
- ❑ Reaming valve guides 86

VALVE SEATS 86

- ❑ Regrinding and replacing valve seats 86

VALVE SPRINGS 88

FITTING CYLINDER HEADS 88

- ❑ Fitting valves 88
- ❑ Fitting tappets 89
- ❑ Fitting camshaft 89
- ❑ Adjusting tappet clearance 89
- ❑ Refitting cylinder head 91

AUXILIARY MEMBER ASSEMBLY 92

- ❑ Dismantling auxiliary member assembly 92
- ❑ Oil pressure control valve 93

OIL PUMP 93

- ❑ Fitting auxiliary member assembly 94
- ❑ 6-element heat exchanger 96

Page

LUBRICATION 97
❑ General 97
❑ Oil vapour recycling system 97
COOLING 99
❑ Description 99
❑ Operation 99
❑ Electromagnetic pulley 100
❑ Water pump 100
❑ Thermostat 100
TIMING AND AUXILIARY MEMBER CONTROL 101
❑ Setting the timing system 101
❑ Checking and aligning electromagnetic coupling pulleys 103
❑ Checking alternator pulley alignment 104
❑ Checking compressor pulley alignment 104
❑ Adjusting compressor - air-conditioner drive belt tension 104
❑ Adjusting alternator - water pump drive belt tension 104
❑ Timing system speed sensor 107
❑ Engine speed sensor 107
SUPERCHARGING 108
❑ Description 108
❑ Turbocharger 108
REPAIRS 109
PRESSURE RELIEF VALVE 109
❑ Checking and adjusting the pressure relief valve 109
❑ Changing the pressure relief valve 109
❑ GARRET GT 2256 T variable geometry turbosupercharger 110
❑ General 110

Page

❑ Operation at low engine rpm 110
❑ Operation at high engine rpm 110
PROPORTIONAL SOLENOID VALVE CONTROLLING TURBOCHARGER ACTUATOR 111
❑ Actuator 111
REPAIRS 112
❑ Checking and adjusting the actuator 112
❑ Actuator replacement 112
FUEL SUPPLY 113
HIGH-PRESSURE ELECTRONIC INJECTION SYSTEM (COMMON RAIL MS 6.3) 113
❑ General 113
SYSTEM OPERATION 115
❑ Self-diagnosis - BLINK CODE 115
❑ Immobilizer recognition 115
❑ Checking fuel temperature 115
❑ Checking engine coolant temperature 115
❑ Checking quantity of fuel injected 115
❑ Checking idling adjustment 115
❑ Fuel cut-off in release phase 115
❑ Checking cylinder balancing on idling 115
❑ Checking regulator engine rotation (anti-sawing) 115
❑ Checking smokiness at exhaust on acceleration 115
❑ Checking exhaust gas recirculation (E.G.R. if present) 115
❑ Checking top speed limit 115
❑ Checking rotation regularity during acceleration 115

Page

- Checking thermostart 115
- Checking activation of air-conditioning system . 115
- Checking fuel pump 115
- Checking diesel warming 116
- Checking cylinder position 116
- Checking pilot and main injection timing 116
- Checking injection pressure closed cycle 116
- Fuel supply 116
- Correcting flow rate according to water temperature 116
- Correcting flow rate to avoid noise, smoke or overloading 116
- De-rating 116
- Adjusting turbine speed (for variable geometry turbocharger - when present) 116
- Injection timing electronic test 116
- Speed governor 116
- Engine starting 116
- Cold starting 117
- Warm starting 117
- Run up 117
- After run 117
- Cut-off 117
- Cylinder balancing 117
- Synchronization search 117
- Operation 118

HYDRAULIC SYSTEM 119

- Fuel pump 119
- Specifications 119
- Fuel filter 120

Page

- High-pressure pump 120
- 3rd pumping element exclusion device 121
- Pressure control valve 121
- Hydraulic accumulator (rail) 121
- Flow limiters 121
- Pressure relief valve 123
- Fuel recirculation and supply system 123

ELECTRO-INJECTORS 125

- Operation 125

ELECTRIC/ELECTRONIC COMPONENTS 126

- Electronic control unit MS6.3 126

SENSORS 126

- Engine speed sensor 126
- Camshaft timing sensor 126
- Air temperature and pressure sensor 126
- Fuel temperature sensor 126
- Fuel pressure sensor 127
- Atmospheric pressure sensor 127
- Engine coolant temperature sensor 127
- Throttle pedal position sensor 127
- Clutch pedal position sensor 127
- Brake pedal position sensor 127
- Vehicle speed sensor 127

ACTUATORS 127

- PWM (Pulse Width Modulation) controls 127

EXHAUST GAS RECIRCULATION SYSTEM E.G.R. (vehicles with homologation MI) 128

GUIDE TO TROUBLESHOOTING 129

EMISSIONS VALUES
Engine 8140.43R.43..

Figure 21

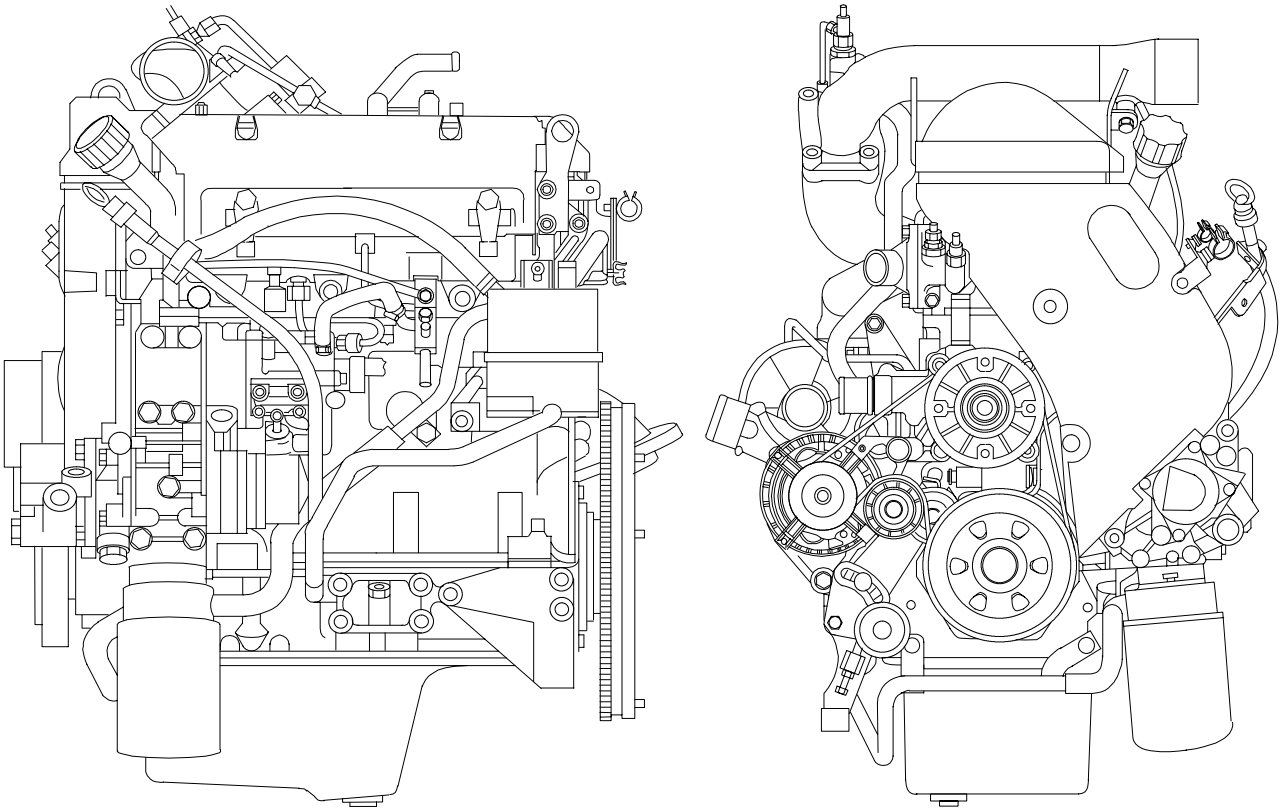

74943

Gas emissions

Engine 8140.43R.43.. conforms to the Euro3 standards on gas emissions (measured on engine bench to OICA mode 13 cycle), with the following limits fixed by EEC regulation 1999/96:

- CO (carbon monoxide) < 2.1 g/kWh
- NOx (nitrogen oxide) < 5.0 g/kWh
- HC (hydrocarbons) < 0.66 g/kWh
- Particulate < 0.13 g/kWh

Test fuel: CEC RFT 73 - T - 90 - S ≤ 0.05 %.

Smokiness

Engine 8140.43R.43.. conforms to the smoke limits required by EEC regulations 72/306 and R24-03 with the following exhaust smoke values:

Maximum power (Bosch BSU opacimeter degrees)	1.5
Maximum torque (Bosch BSU opacimeter degrees)	2.5
Full load at 1000 rpm (Bosch BSU opacimeter degrees)	3.5

Noise emissions

Maximum mean noise level, Lpa, of the standard engines measured according to ISO Std. 3745 (microphones at 1 m from the engine surfaces):

Idling	(800 rpm)	dB A 76
Full power	(3600 rpm)	dB A 99

Engine 8140.43B.43..

Figure 22

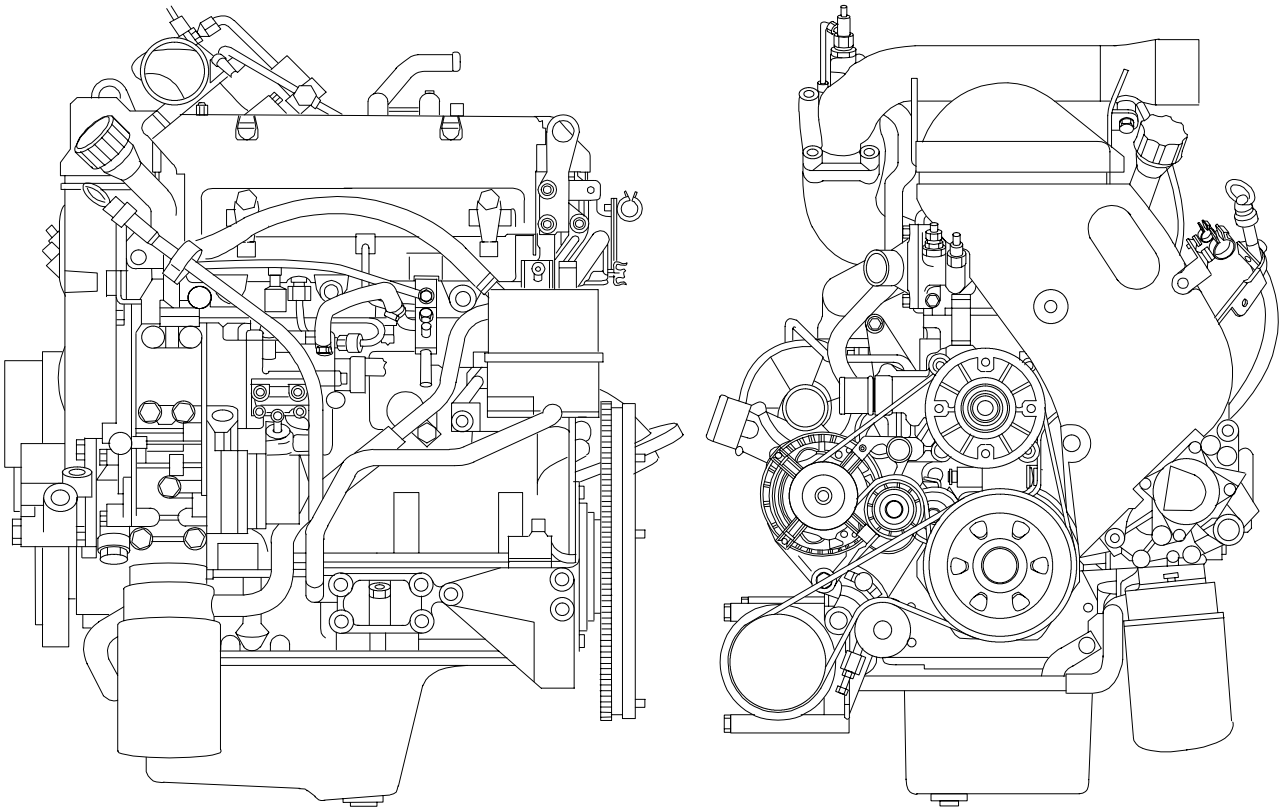

74939

Gas emissions

Engine 8140.43B.43.. conforms to the Euro3 standards on gas emissions (measured on engine bench to OICA mode 13 cycle), with the following limits fixed by EEC regulation 1999/96:

- CO (carbon monoxide) < 2.1 g/kWh
- NOx (nitrogen oxide) < 5.0 g/kWh
- HC (hydrocarbons) < 0.66 g/kWh
- Particulate < 0.13 g/kWh

Test fuel: CEC RFT 73 - T - 90 - S ≤ 0.05 %.

Smokiness

Engine 8140.43B.43.. conforms to the smoke limits required by EEC regulations 72/306 and R24-03 with the following exhaust smoke values:

Maximum power (Bosch BSU opacimeter degrees)	1.5
Maximum torque (Bosch BSU opacimeter degrees)	2.5
Full load at 1000 rpm (Bosch BSU opacimeter degrees)	3.5

Noise emissions

Maximum mean noise level, Lpa, of the standard engines measured according to ISO Std. 3745 (microphones at 1 m from the engine surfaces):

Idling	(800 rpm)	dB A 76
Full power	(3600 rpm)	dB A 99

Engine 8140.43S.41..

Figure 23

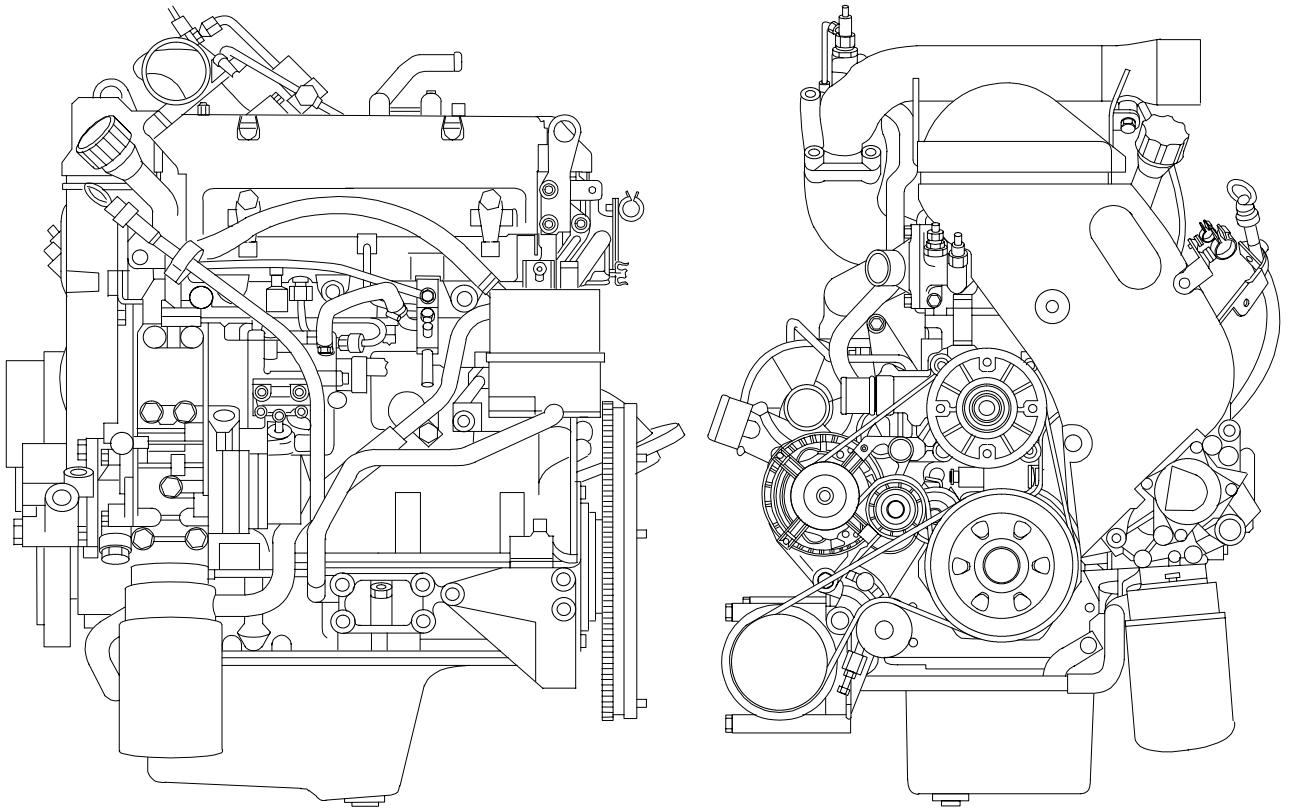

Gas emissions

Engine 8140.43S.41.. with E.G.R. conforms to the Standard on gas emissions ECE 96/69 step 2 (measured on roller bench according to ECE-EUDC 20 mode 1 cycle), with the following limits:

- CO (carbon monoxide) < 1.5 g/kWh
- HC+NOx (unburnt hydrocarbons + nitrogen oxide) < 1.6 g/km
- Particulate < 0.2 g/kWh

Test fuel: CEC RFT 73 - T - 90 - S v 0.05 %.

Test conditions: coast-down assigned 12.7 kW at 80 km/h.
Reference weight of vehicle 2270 kg
Vehicle equipped with EGR system and oxidizing catalyst:

- Degussa 1.5 l - 300 cpsi - V50 - 2g - Pt
- Kemira 1.5 l - 300 cpsi - 7007 - 1g - Pt

Smokiness

Engine 8140.43S.41.. with E.G.R. conforms to the smoke limits required by EEC regulations 72/306 and R24-03 with the following exhaust smoke values:

Maximum power (Bosch BSU opacimeter degrees)	1.5
Maximum torque (Bosch BSU opacimeter degrees)	2.5
Full load at 1000 rpm (Bosch BSU opacimeter degrees)	3.5

Noise emissions

Maximum mean noise level, Lpa, of the standard engines measured according to ISO Std. 3745 (microphones at 1 m from the engine surfaces):

Idling	(800 rpm)	dB A 76
Full power	(3600 rpm)	dB A 99

Engine 8140.43S.43..

Figure 24

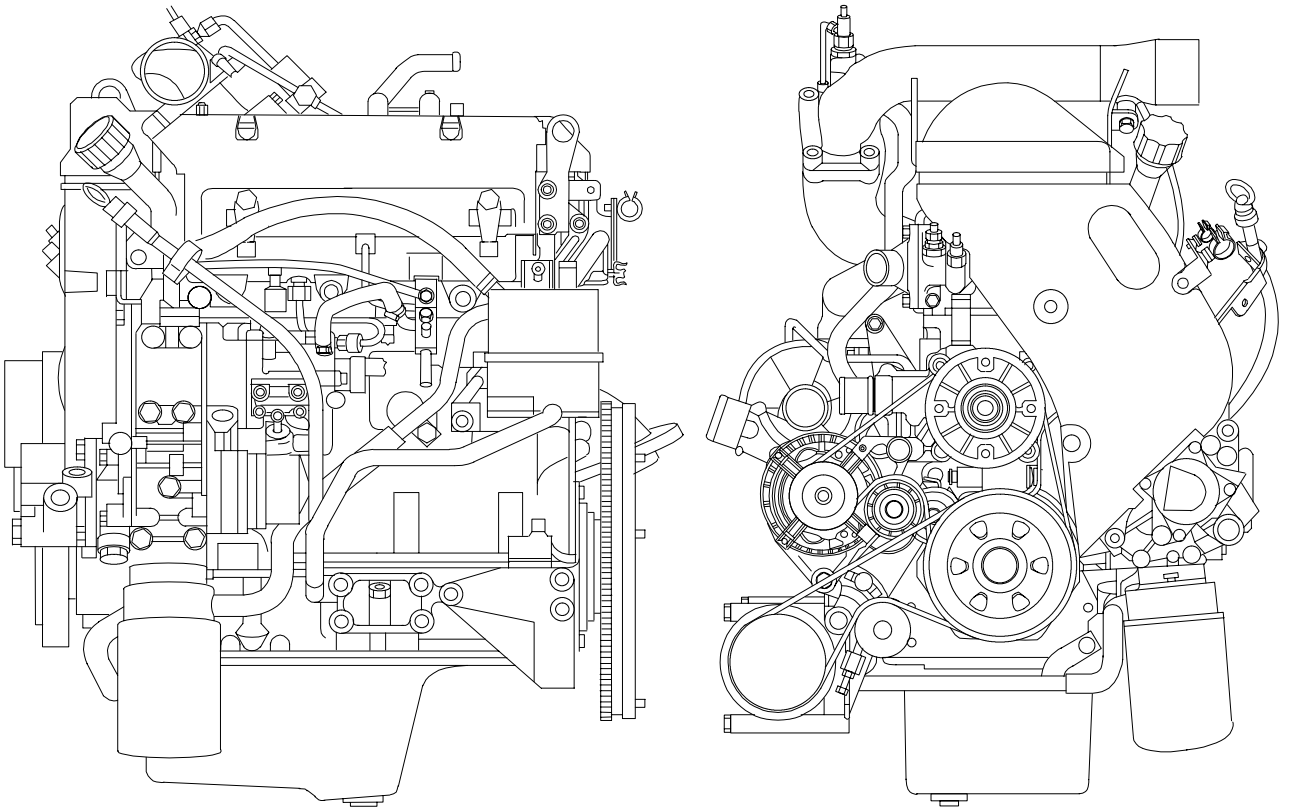

Gas emissions

Engine 8140.43S.43.. conforms to the Euro3 standards on gas emissions (measured on engine bench to OICA mode 13 cycle), with the following limits fixed by EEC regulation 1999/96:

- CO (carbon monoxide) < 2.1 g/kWh
- NOx (nitrogen oxide) < 5.0 g/kWh
- HC (hydrocarbons) < 0.66 g/kWh
- Particulate < 0.13 g/kWh

Test fuel: CEC RFT 73 - T - 90 - S ≤ 0.05 %.

Smokiness

Engine 8140.43S.43.. conforms with the limits of smokiness required by EEC standards 72/306: 1.37 lm with the following exhaust smokiness values:

Maximum power (Bosch BSU opacimeter degrees)	1.5
Maximum torque (Bosch BSU opacimeter degrees)	2.5
Full load at 1000 rpm (Bosch BSU opacimeter degrees)	3.5

Noise emissions

Maximum mean noise level, Lpa, of the standard engines measured according to ISO Std. 3745 (microphones at 1 m from the engine surfaces):

Idling	(800 rpm)	dB A 76
Full power	(3600 rpm)	dB A 99

Engine 8140.43N.43..

Figure 25

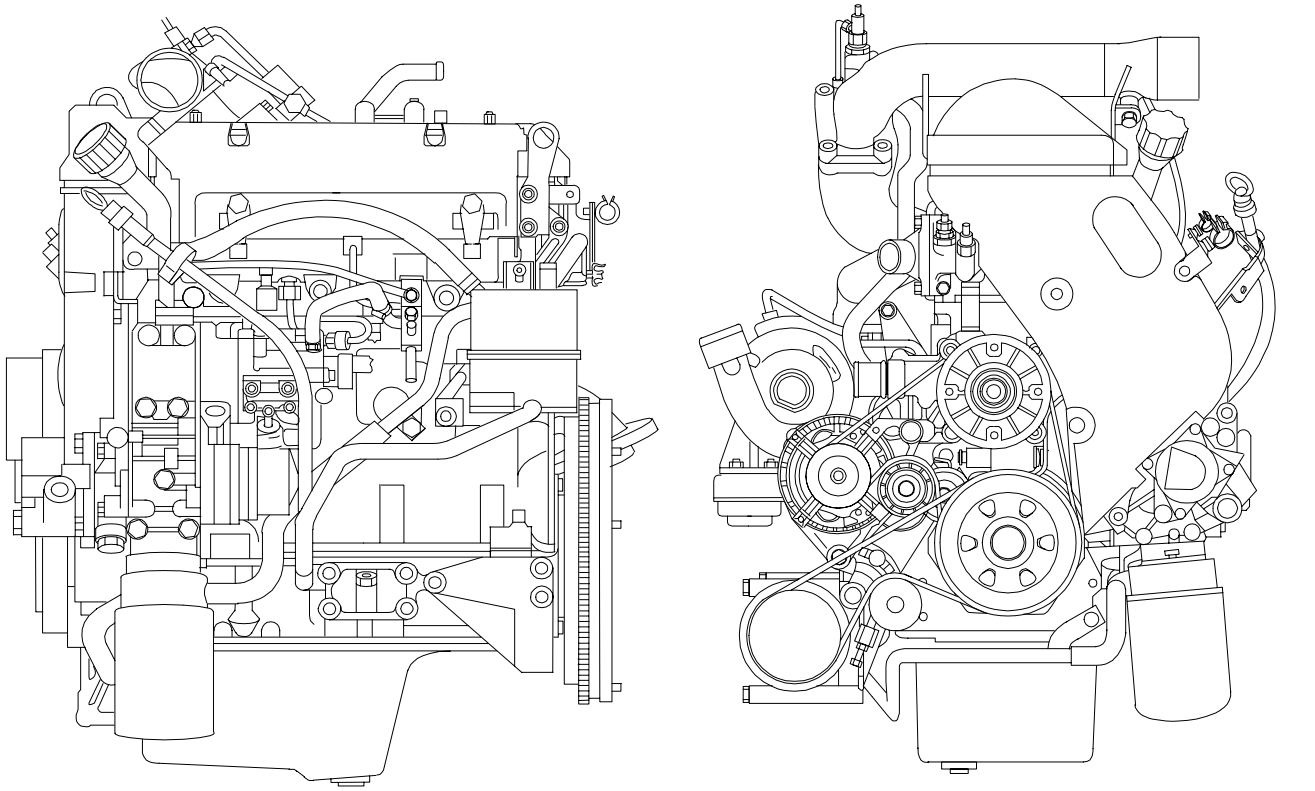

Gas emissions

Engine 8140.43N conforms to the Euro3 standards on gas emissions (measured on engine bench to OICA mode 13 cycle), with the following limits fixed by EEC regulation 1999/96:

- CO (carbon monoxide) < 2.1 g/kWh
- NOx (nitrogen oxide) < 5.0 g/kWh
- HC (hydrocarbons) < 0.66 g/kWh
- Particulate < 0.13 g/kWh

Test fuel: CEC RFT 73 - T - 90 - S ≤ 0.05 %.

Smokiness

Engine 8140.43N conforms with the limits of smokiness required by EEC standards 72/306: 1.37 lm with the following exhaust smokiness values:

Maximum power (Bosch BSU opacimeter degrees)	1.5
Maximum torque (Bosch BSU opacimeter degrees)	2.5
Full load at 1000 rpm (Bosch BSU opacimeter degrees)	3.5

Noise emissions

Maximum mean noise level, Lpa, of the standard engines measured according to ISO Std. 3745 (microphones at 1 m from the engine surfaces):

Idling	(800 rpm)	dB A 76
Full power	(3600 rpm)	dB A 99

Figure 26

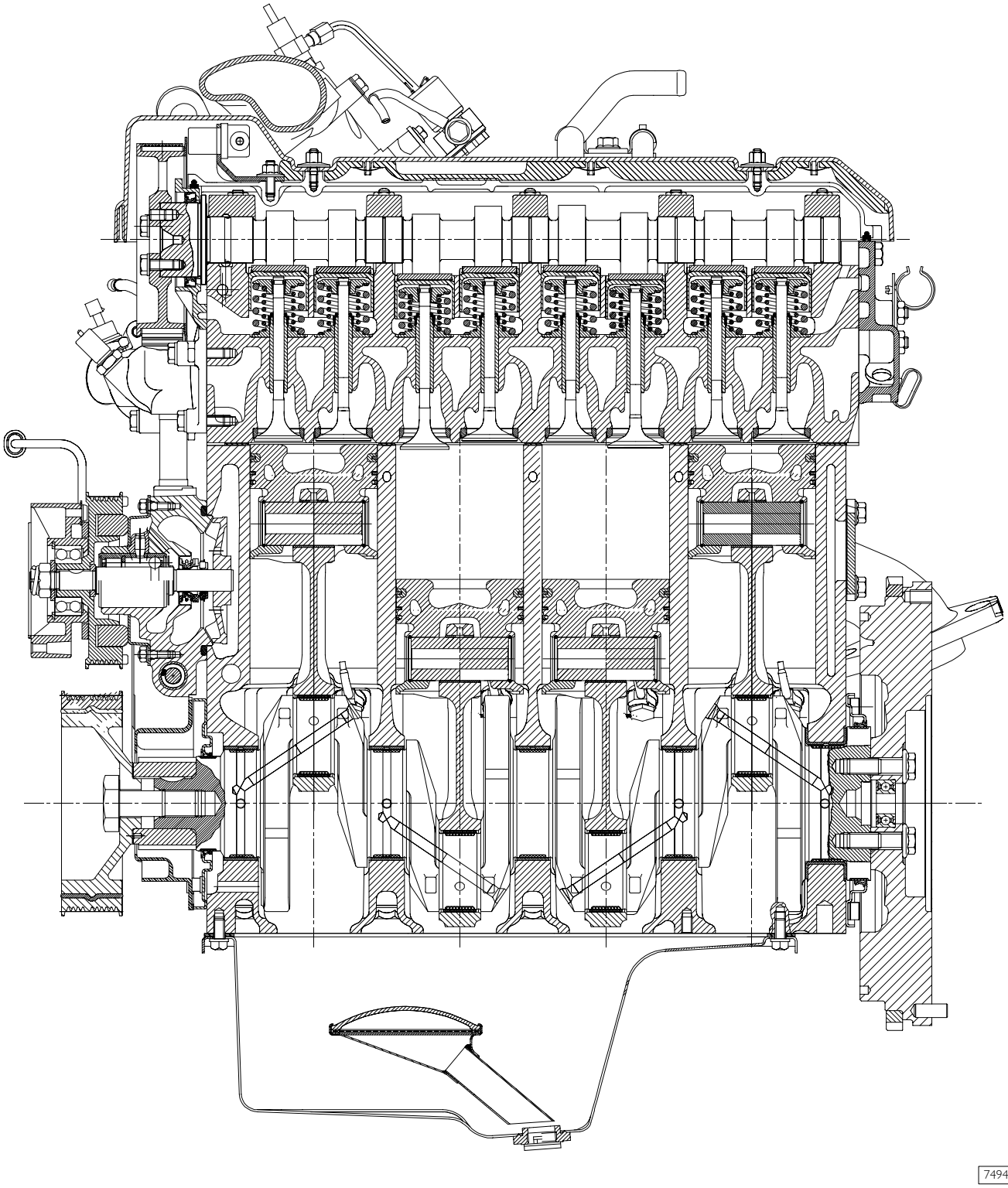

8140.43R/B/S.43XX ENGINE LONGITUDINAL SECTION

Figure 27

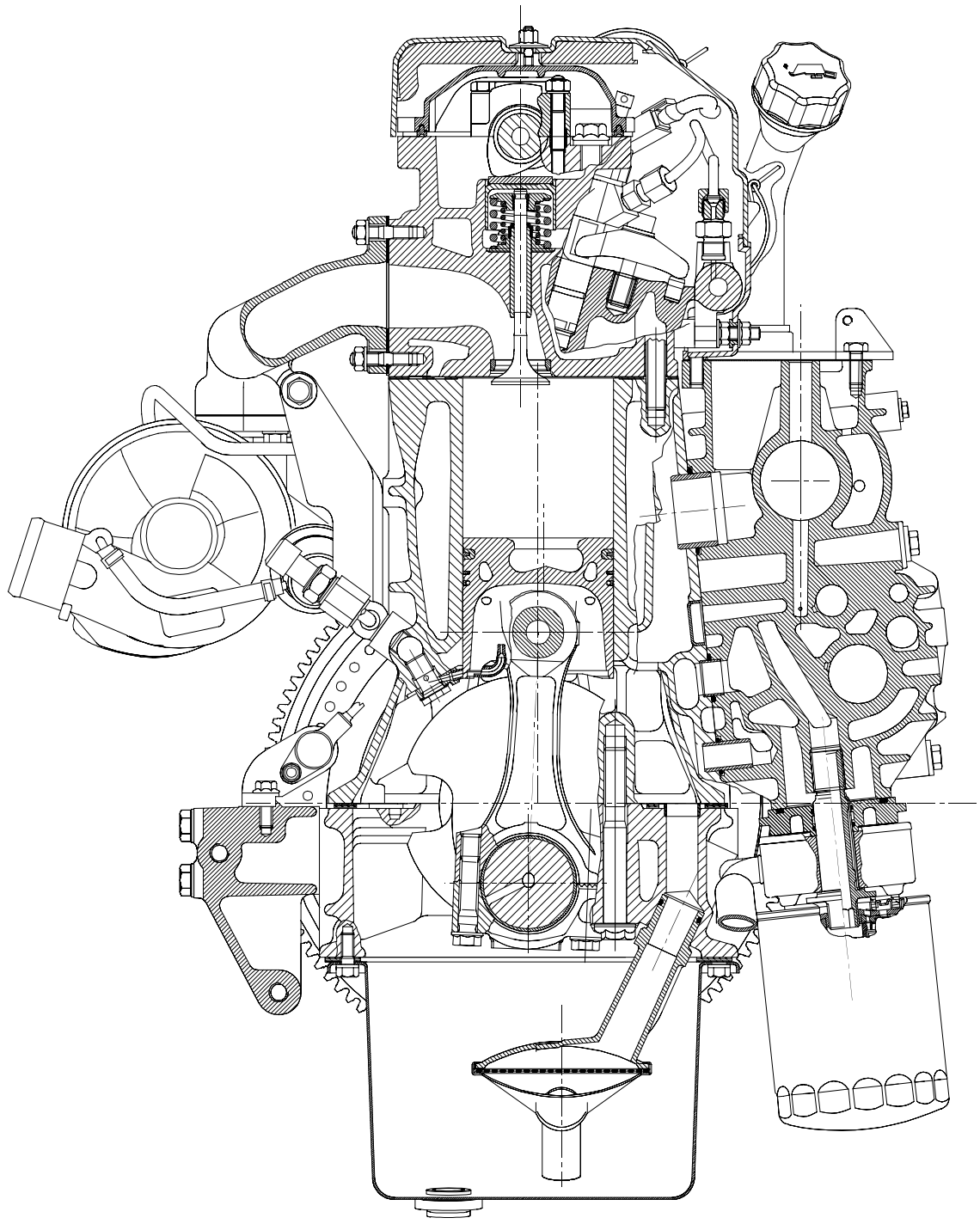

74941

8140.43R/B/S.43XX ENGINE CROSS SECTION

Figure 28

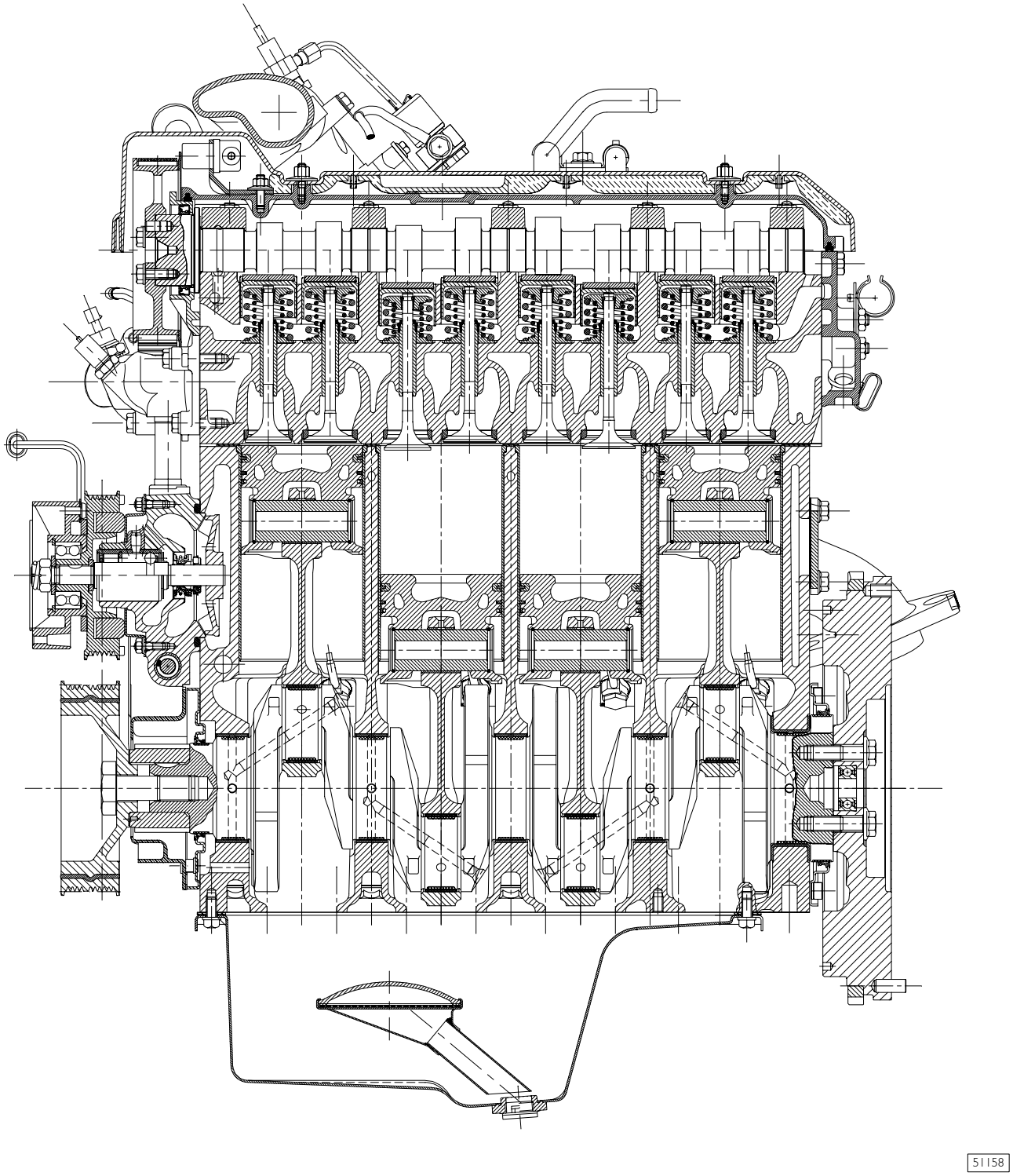

8140.43N.4... ENGINE LONGITUDINAL SECTION

Figure 29

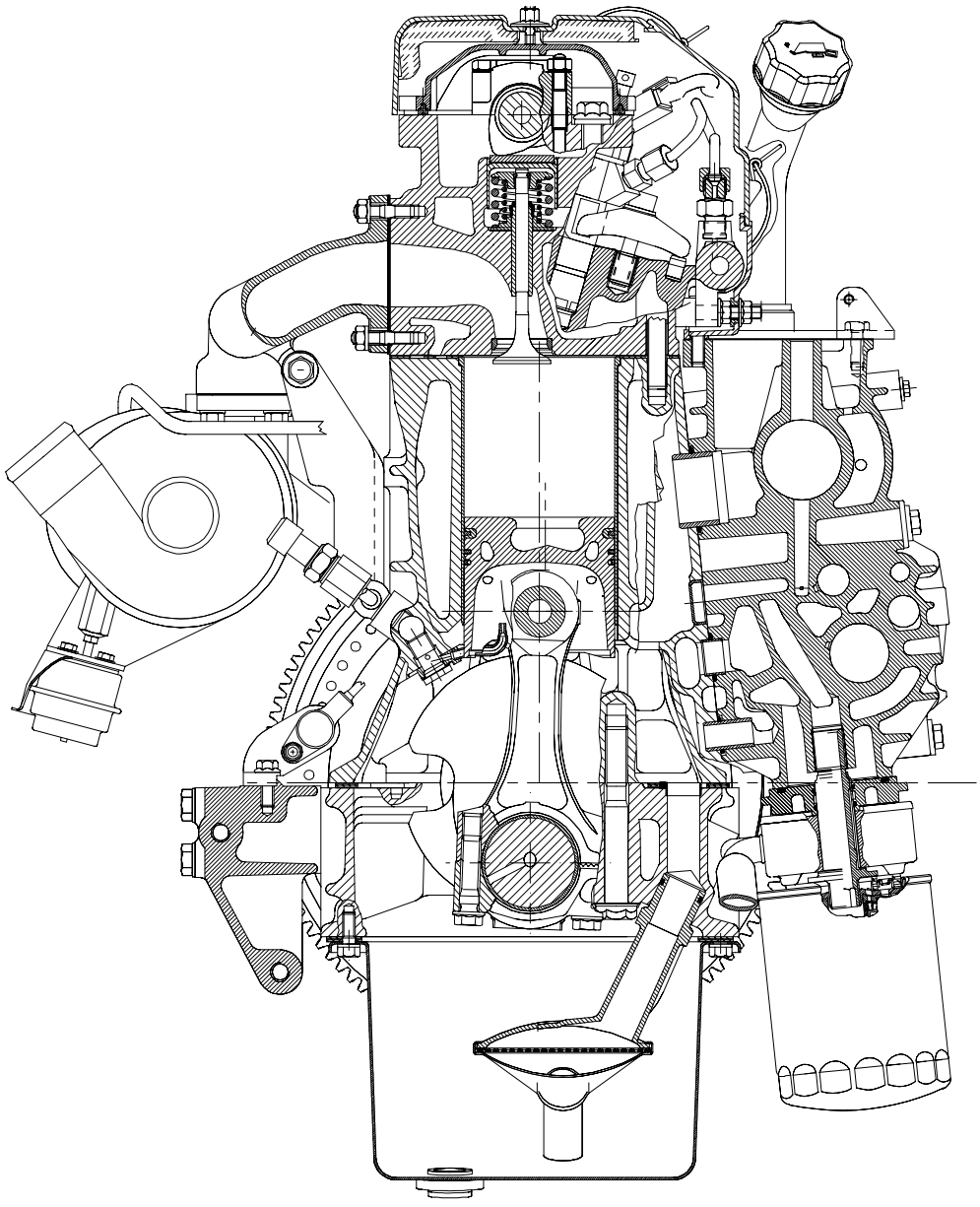

62866

8140.43N.4... ENGINE CROSS SECTION

GENERAL SPECIFICATIONS

			8140.43R.43XX ID/TCA	8140.43B.43XX ID/TCA	8140.43S.41XX 8140.43S.43XX ID/TCA	8140.43N.43XX ID/TCA
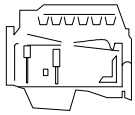	Type					
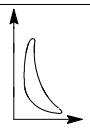	Cycle		Diesel 4 strokes			
	Feeding		Supercharged with aftercooler			
	Injection		Direct			
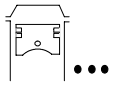	No. of cylinders		4 on-line			
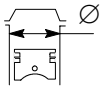	Diameter	mm	94.4			
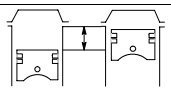	Stroke	mm	100			
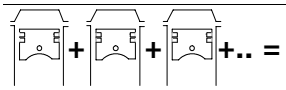	Total displacement	cm^3	2800			
	Compression ratio		18:1			
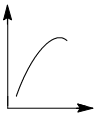 	Max. power	kW (HP)	64.7 ÷ 67.3 (88.0 ÷ 91.6)	75.3 ÷ 80.7 (102.4 ÷ 1098)	88.8 ÷ 95.2 (120.8 ÷ 129.5)	103.5 ÷ 110.5 (140.7 ÷ 150.3)
		rpm	3600	3600	3600	3600
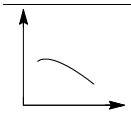 	Max. torque	Nm (kgm)	201.6 ÷ 218.4 (20.6 ÷ 22.3)	237.5 ÷ 262.5 (24.2 ÷ 26.7)	275.5 ÷ 304.7 (28.1 ÷ 31.1)	304 ÷ 338 (31 ÷ 34.2)
		rpm	1800	1800	1800	1800
	Engine idling speed, no load	rpm	800 ± 25			
	Maximum engine speed, no load	rpm	4200 ± 50			
	Pressure at T.D.C.	*bar	20 ÷ 26			
	Minimum permissible pressure at T.D.C.	*bar	16			

(*) The pressure value is recorded by turning the engine over with the electric starter motor, with oil temperature at 40°- 50°C and the injection pump in the stop condition.

ID = Direct injection
PC = Indirect injection (pre-chamber)
TCA = Supercharging with intercooler

		8140.43R.43XX ID/TCA	8140.43B.43XX ID/TCA	8140.43S.41XX 8140.43S.43XX ID/TCA	8140.43N.43XX ID/TCA
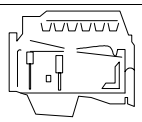	Type				
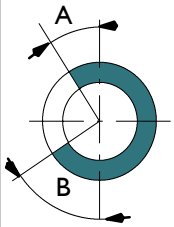	VALVE TIMING opens before T.D.C. A closes after B.D.C. B opens before B.D.C. D closes after T.D.C. C		8° 37° 48° 8°		
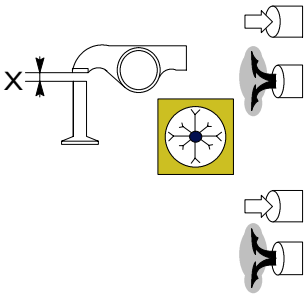	For timing check X mm mm Running X mm mm		0.5 ± 0.05 0.5 ± 0.05 0.5 ± 0.05 0.5 ± 0.05		
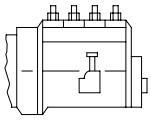	FUEL SUPPLY		Electronic high-pressure fuel supply system type BOSCH MS6.3, comprising a high-pressure pump, electro-injectors, hydraulic accumulator (rail), EDC control unit, pressure and temperature sensors.		
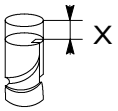	Pump arrangement With piston n. 1 at T.D.C. Start of delivery mm		- -		
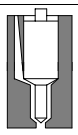	Injector nozzle type		BOSCH DSLA 136 P 804		
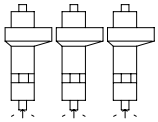	Injection order		1 - 3 - 4 - 2		
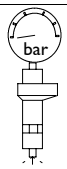	Injection pressure bar		1350		

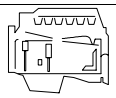 Type		8140.43R.43XX ID/TCA	8140.43B.43XX ID/TCA	8140.43S.41XX 8140.43S.43XX ID/TCA	8140.43N.43XX ID/TCA
 SUPERCHARGING		With intercooler			-
Turbocharger type		KKK K03-2076-CCA 6.68			-
marked with colour		pink		blue	
Turbocharger shaft radial clearance		-		-	-
Turbocharger shaft axial clearance		-		-	-
Minimum opening stroke of pressure relief valve	mm	-			-
Maximum opening stroke of pressure relief valve	mm	3.5		2.2	-
Pressure corresponding to the minimum stroke	bar	-		-	-
Pressure corresponding to the maximum stroke	bar	1.3 ± 0.002			-
 Turbocharger type		MITSUBISHI TD04			
marked with colour		pink		blue	-
Turbocharger shaft radial clearance		0.396 ÷ 0.602			-
Turbocharger shaft axial clearance		0.034 ÷ 0.106			-
Minimum opening stroke of pressure relief valve	mm	1			-
Maximum opening stroke of pressure relief valve	mm	5			-
Pressure corresponding to the minimum stroke	bar	1.11 ± 0.0026		1.21 ± 0.0026	-
Pressure corresponding to the maximum stroke	bar	1.35 ± 0.0039		1.45 ± 0.0039	-
 Turbocharger type					
marked with colour					-
Turbocharger shaft radial clearance		-			0.086 ÷ 0.117
Turbocharger shaft axial clearance		-			0.030 ÷ 0.083
Actuator setting:					with variable
- low pressure0 mmHg	valve fully open	-			geometry
- low pressure 150 mmHg	valve stroke mm	-			2.3 ÷ 3.7
- low pressure400 mmHg	valve stroke mm	-			9.7 ÷ 10.7
- valve fully shut	valve stroke mm	-			11 ÷ 12.4
	LUBRICATION	Forced feed by gear pump, relief valve, dual action oil filter			
	Oil pressure, engine hot				
	at idling speed bar	⩾ 0.8	⩾ 0.8	0.8	⩾ 0.8
	at maximum speed bar	⩾3.5	⩾3.5	3.5	⩾3.5
COOLING		With a centrifuge pump, driven by the crankshaft via a poly-V belt, thermostat, fan with electro-magnetic clutch, radiator, "Intercooler" heat exchanger.			
	Thermostat:				
	starts to open:	82° C ± 2° C			
	fully open:	110° C			
 Urania[c]	OIL REPLENISHMENT				
Urania Turbo	Total capacity at 1st filling				
Urania Turbo LD	liters	6.9			
	kg	6.1			
	Quantity at periodical replacements:				
	- engine sump				
	liters	5.2			
	kg	4.6			
	- engine sump				
	liters	6.3			
	kg	5.7			

ASSEMBLY DATA - CLEARANCES

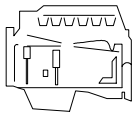 Type	8140.43R.43XX ID/TCA	8140.43B.43XX ID/TCA	8140.43S.41XX 8140.43S.43XX ID/TCA	8140.43N.43XX ID/TCA
CYLINDER BLOCK AND CRANK MECHANISM COMPONENTS				
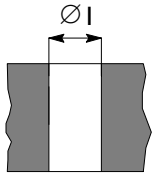 Bores for cylinder liners Ø 1	97.39 ÷ 97.45 *			
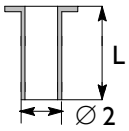 Cylinder liners:	**			
outside diameter Ø 2	97.47 ÷ 97.50			
length L	167.00 ÷ 167.30			
 Cylinder liners - crankcase bores (negative allowance)	0.02 ÷ 0.11			
 Outside diameter Ø 2	0.2			
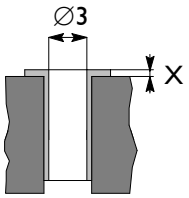 Cylinder barrels: (protrusion from engine block bottom)	** 0.005 max			
inside diameter Ø 3	94.402 ÷ 94.432			
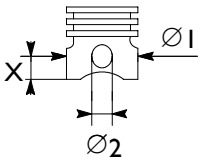 Pistons: supplied as spare parts type:	MONDIAL PISTON			
measuring dimension X	10			
outside diameter Ø 1	94.306 ÷ 94.320			
pin bore Ø 2	32.003 ÷ 32.009			
 Piston - cylinder sleeve	0.082 ÷ 0.126			
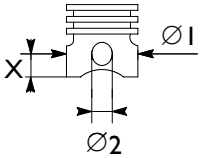 Pistons: supplied as spare parts type:	KS			
measuring dimension X	10			
outside diameter Ø 1	94.306 ÷ 94.320			
pin bore Ø 2	32.003 ÷ 32.009			
 Piston - cylinder sleeve	0.082 ÷ 0.126			
 Piston diameter Ø 1	0.4			
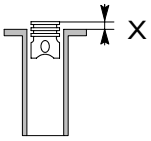 Pistons protrusion X	> 0.40 ÷ ≤ 0.80			
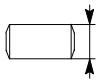 Gudgeon pin Ø 3	31.990 ÷ 31.996			
 Gudgeon pin - pin housing	0.003 ÷ 0.015			

* Diameter to obtain at the time of servicing to fit the cylinder liners supplied as spares.
** Supplied as spares.

	Type	8140.43R.43XX ID/TCA	8140.43B.43XX ID/TCA	8140.43S.41XX 8140.43S.43XX ID/TCA	8140.43N.43XX ID/TCA
CYLINDER BLOCK AND CRANK MECHANISM COMPONENTS		mm			
	Piston type	MONDIAL PISTON - KS			
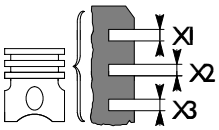	Piston ring grooves X1*	2.200 ÷ 2.230			
	Piston ring grooves X2	2.050 ÷ 2.070			
	Piston ring grooves X3	2.540 ÷ 2.560			
	* measured on Ø of 91.4 mm				
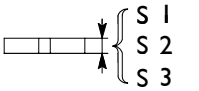	Piston rings S 1*	2.068 ÷ 2.097			
	Piston rings S 2	1.970 ÷ 1.995			
	Piston rings S 3	2.470 ÷ 2.490			
	* measured on Ø of 91.4 mm				
	Piston rings - grooves 1	0.103 ÷ 0.162			
	Piston rings - grooves 2	0.55 ÷ 0.100			
	Piston rings - grooves 3	0.05 ÷ 0.09			
IVECO PARTS 	Piston rings	0.4			
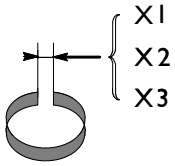	Piston ring end gap in cylinder liners				
	X1	0.20 ÷ 0.35			
	X2	0.30 ÷ 0.50			
	X3	0.30 ÷ 0.55			
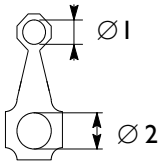	Small end bush housing Ø 1	35.460 ÷ 35.490			
	Big end bearing housing * Ø 2	60.341 ÷ 60.348			
	* spare connecting rod supplied				
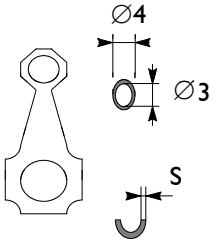	Small end bush diameter				
	outside Ø 4	35.570 ÷ 35.595			
	inside Ø 3	32.010 ÷ 32.020			
	Big end bearing shell supplied as spare parts S	1.875 ÷ 1.884			
	Small end bush - housing	0.08 ÷ 0.135			
	Piston pin - bush	0.014 ÷ 0.03			
IVECO PARTS 	Piston rings	0.254 ÷ 0.508			

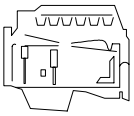	Type	8140.43R.43XX ID/TCA	8140.43B.43XX ID/TCA	8140.43S.41XX 8140.43S.43XX ID/TCA	8140.43N.43XX ID/TCA
CYLINDER BLOCK AND CRANK MECHANISM COMPONENTS		mm			
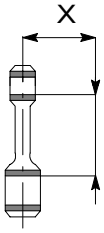	Measuring dimension X Max. connecting rod axis misalignment tolerance =	125 0.07			
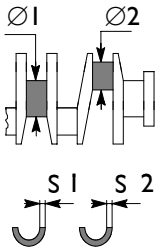	Main journals Ø 1 n° 1 - 2 - 3 - 4 n° 5 Crankpins Ø 2 Main bearing shells S1* Big end bearing shells S2* * supplied as spare parts	 80.182 ÷ 80.208 86.182 ÷ 86.208 56.515 ÷ 56.538 2.165 ÷ 2.174 1.875 ÷ 1.884			
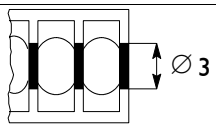	Main bearings Ø 3 n° 1 - 2 - 3 - 4 n° 5	 84.588 ÷ 84.614 90.588 ÷ 90.614			
	Bearing shells - main journals	0.032 ÷ 0.102			
	Bearing shells - big ends	0.035 ÷ 0.083			
	Main bearing shells	0.254 ÷ 0.508			
	Big end bearing shells	0.254 ÷ 0.508			
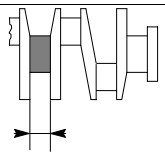	Main journal, thrust bearing X 1	31.000 ÷ 31.100			
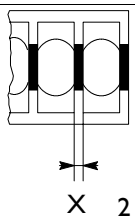	Main bearing housing, thrust bearing X 2	26.500 ÷ 26.550			
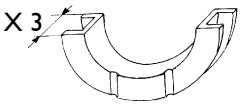	Thrust washer halves X 3	30.900 ÷ 30.950			
	Crankshaft end float	0.060 ÷ 0.310			

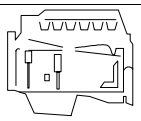 Type	8140.43R.43XX ID/TCA	8140.43B.43XX ID/TCA	8140.43S.41XX 8140.43S.43XX ID/TCA	8140.43N.43XX ID/TCA
CYLINDER HEADS - VALVE GEAR	mm			
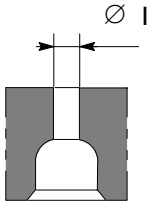 Valve guide housings in the cylinder heads Ø1	12.950 ÷ 12.985			
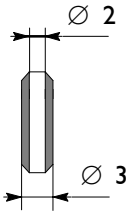 Valve guide Ø2 Ø3	8.023 ÷ 8.038 13.012 ÷ 13.025			
Valve guides and housings in the cylinder heads	0.027 ÷ 0.075			
IVECO PARTS > Valve guide	0.05 - 0.10 - 0.2			
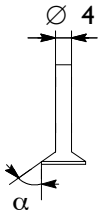 Valves: Ø4 α	7.985 ÷ 8.000 60° 15′ ± 7′ 30″			
Ø4 α	7.985 ÷ 8.000 45° 30′ ± 7′ 30″			
Valve stem and its guide	0.023 ÷ 0.053			
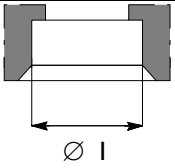 Housing in head for valve seat Ø1	42.125 ÷ 42.175			
Ø1	37.380 ÷ 37.415			
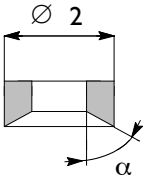 Outside diameter of valve seat; angle of valve seat in cylinder head: Ø2 α	44.245 ÷ 44.260 60° ± 5′			
Ø2 α	37.495 ÷ 37.510 45° ± 5′			
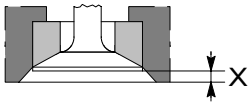 X Recessing of valve X	1.2 ÷ 1.5 1 ÷ 1.3			
Between valve seat and head	0.070 ÷ 0.135			
	0.080 ÷ 0.130			
IVECO PARTS > Valve seats	-			

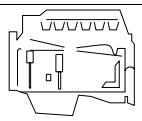 Type	8140.43R.43XX ID/TCA	8140.43B.43XX ID/TCA	8140.43S.41XX 8140.43S.43XX ID/TCA	8140.43N.43XX ID/TCA
CYLINDER HEADS - VALVE GEAR		mm		
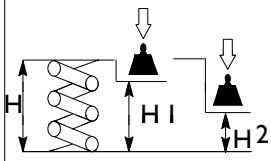 Valve outside spring height:				
free height H		52		
under a load of:				
kg 43.8 ± 2.5 H1		38.5		
kg 77.4 ± 4 H2		28.5		
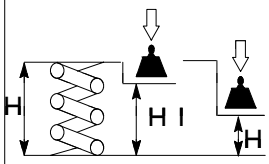 Valve inside spring height:				
free height H		45.5		
under a load of:				
kg 16.4 ± 1 H1		33.5		
kg 30 ± 1.5 H2		23.5		
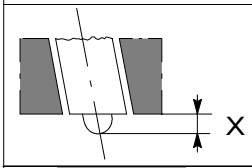 Injector protrusion X		3.7 ÷ 4.3		
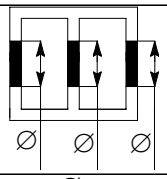 Camshaft bearing housing				
normal Ø		33.985 ÷ 34.015		
oversized Ø		34.185 ÷ 34.215		
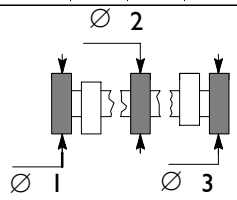 Camshaft bearing journals				
normal Ø		33.934 ÷ 33.950		
oversized Ø		34.134 ÷ 34.150		
 Between seats and supporting pins		0.035 ÷ 0.081		
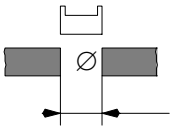 Tappets housing on cylinder heads				
Ø normal		44.000 ÷ 44.025		
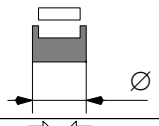 Tappet Ø normal		43.950 ÷ 43.970		
 Between tappets and seats		0.030 ÷ 0.075		
 Cap		3.25 to 4.45 mm with a progression of 0.05		
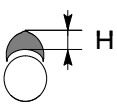 Cam lift:				
 H		9.5		
 H		10.5		

TIGHTENING TORQUES

PART	TORQUE	
	Nm	kgm
Flanged screw, cylinder head		
Phase 1: pretightening	60 ± 5	6 ± 0.5
Phase 2: pretightening	60 ± 5	6 ± 0.5
Phase 3: angle	180° ± 10°	
Flanged screw, lower to upper cylinder block		
Preliminary torque	50 ± 5	5 ± 0.5
Angle	90° ± 5°	
Connecting rod caps fastening screw		
Preliminary torque	50 ± 5	5 ± 0.5
Angle	63° ± 2°	
Flywheel attachment bolts		
Preliminary torque	30 + 3	3 + 0.3
Angle	90° ± 2°	
Self-locking nut for fastening the electromagnetic joint to the water pump		
Preliminary torque	40	4
Angle	110° ± 10°	
Blanking plug, engine oil main pipe M18	40	4
Oil pan/engine block fastening screw	18	1.8
Accessory equipments support oil duct sealing plug	25	2.5
Flanged screw, auxiliary units mounting M12	60	6
Accessory equipments support fastening screw M8	25	2.5
Accessory equipments support front cover fastening screw	23	2.3
Accessory equipments support rear cover fastening screw	18	1.8
Hexagon socket-head screw, crankshaft oil seal rear cover (Rotostat)	25	2.5
Hexagon socket-head screw, crankshaft oil seal front cover (Rotostat)	7.5	0.75
Camshaft front cover fastening nut	7.5	0.75
Water pump pipe/inlet manifold fastening nut	25	2.5
Cylinder heads rear cover fastening screws and nut	25	2.5
Nut, engine lifting brackets	18	1.8
Inlet and outlet manifold fastening nut	25	2.5
Inlet manifold/crank fastening screw	18	1.8
Crankshaft driving pulley fastening screw	200	20
Camshaft caps fastening nut	18	1.8
Camshaft driving gear fastening screw	25	2.5
Injection pump driving gear fastening screw	100	10
EGR valve/inlet and outlet manifolds fastening nut	18	1.8
Nut fixing toothed bushing to the high-pressure pump	79	7.9
Coupling fixing heat exchanger and for oil filter cartridge *	80	8
Oil filter fixing	25	2.5
Screw fixing oil suction strainer	25	2.5
Oil pressure valve spring cap	65	6.5
Union for piston cooling nozzle	40	4
Flanged screw fixing water pump casing to crankcase	50	5
Oil level sensor fixing on crankcase	25	2.5

* The thread must first be spread with IVECO 1905683 sealant

PART	TORQUE	
	Nm	kgm
Nut, magnet to water pump	7.5	0.75
Screw, cylinder head water thermostat pipe union	18	1.8
Screw, driven pulley to water pump hub	25	2.5
Screw, alternator mounting to crankcase	50	5
Screw, alternator to mounting	75	7.5
Nut fixing alternator tensioning bracket	45	4.5
Nut, turbocharger to exhaust manifold	25	2.5
Screw, thermostat water outlet pipe	18	1.8
Nut, power steering pump	35	3.5
M6 screw, vacuum pump	12	1.2
M8 flanged screw, vacuum pump	18	1.8
Plug, auxiliary units front cover	35	3.5
Self-locking nut, tappets cover	10	1
Nut fixing top tensioner bearing mount	30	3
Nut fixing bottom tensioner mount	25	5
Nut fixing bottom tensioner bearing	40	4
Union, turbocharger oil outlet pipe	80	8
Union, turbocharger oil delivery pipe	25	2.5
Flanged screw, oil drain mounting to lower crankcase	40	4
Oil pipe fitting, to crankcase main duct	45	4.5
Fastening, oil pressure sender and switch to pipe fitting	40	4
Flanged screw, gas exhaust pipe to turbocharger	25	2.5
Nut, thermostarter plug	35	3.5
Fastening, thermostarter connection to plug	22	2,2
Fastening, solenoid valve union	18	1.8
Screws, heat exchanger pipes to upper crankcase	40	4
Water transmitter fixing M16x1.5 (conical) to thermostat assembly	30	3
Fan wire fastening	18	1.8
Crankcase water drain pipe union	35	3.5
Nut, water inlet line to pump	25	2.5
Screw, cover to thermostat box	18	1.8
Thermometric transmitter fixing - M8x1.25	10	1
Thermometric transmitter fixing - M12x1.5	30	3
Thermometric transmitter fixing - M14x1.5	20	2
M10x1.25 50 c.s. hex screw to secure injector bracket	40	4
M12x1.5 fitting for diesel outlet from high-pressure pump	20	2
M12x1.5 fitting for diesel inlet on hydraulic accumulator (rail)	20	2
M14x1.5 fitting for diesel outlet from hydraulic accumulator (rail)	20	2
M12x1.5 fitting for diesel inlet on electro-injector	20	2
5-way fixing coupling M16x1.5 on overpressure valve (rail), if applicable	27	2.7
M8 nut securing hydraulic accumulator (rail) on cylinder head	25	2.5
M8 nut securing bottom soundproof cover on hydraulic accumulator (rail)	18	1.8
M8 nut securing high-pressure pump on spacer	25	2.5
Fuel pressure sensor fixing on hydraulic accumulator (rail)	35	3.5
Flow limiter fixing on hydraulic accumulator, if applicable	45	4.5
Pressure relief valve fixing on hydraulic accumulator (rail)	45	4.5

* Coat thread with IVECO 1905683 sealing compound before assembly

PART	TORQUE	
	Nm	kgm
Engine auxiliary units		
Screw, fan distance piece to electromagnetic pulley	13 ± 1	1.3 ± 0.1
Screw, fan to distance piece	6 ± 0,6	0.6
Screw, starter motor	41 ± 4	4.1 ± 0.4
Engine assembly suspension		
M12 screw fixing bracket for flexible plug to engine	90 ÷ 74	9 ÷ 7.4
M10 screw fixing bracket for flexible plug to frame	58 ÷ 47	5.8 ÷ 4.7
M12 screw fixing bracket for flexible plug to frame	101 ÷ 83	10.1 ÷ 8.3
M12 self-locking nut fixing flexible plug to brackets	49	4.9
Screw securing rear bracket supporting gearbox	35	3.5
Nut securing flexible plug to rear bracket supporting gearbox	49	4.9
Screw securing flexible plug to cross member	20	2
M12 screw securing cross member to frame	101 ÷ 83	10.1 ÷ 8.3

TOOLS

TOOL NO.		DESCRIPTION
99305019	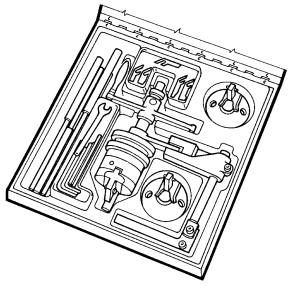	Box with full set of tools for regrinding valve seats
99305047	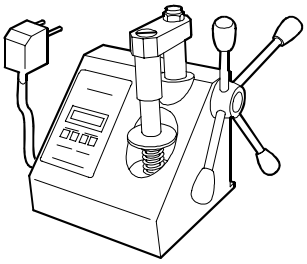	Appliance to check spring loads
99317915	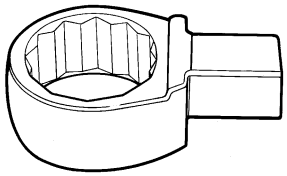	Set of three box wrenches (14-17-19 mm)
99322205	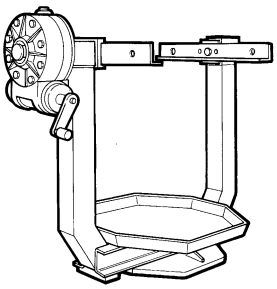	Telescopic rotary stand to overhaul units (700 daN bearing capacity, 120 daN/m torque)
99340035	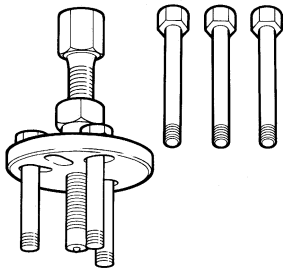	Extractor for electromagnetic pulley
99340205	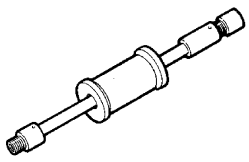	Extractor for electromagnetic pulley

TOOLS		
TOOL NO.		DESCRIPTION
99342138	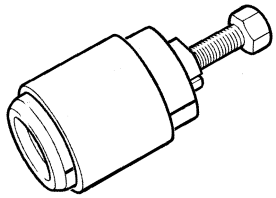	Puller for injection pump coupling joint
99348004	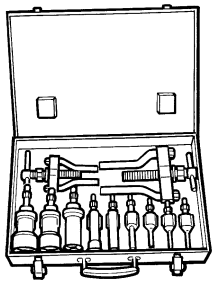	Universal extractor for interiors from 5 to 70 mm
99350114	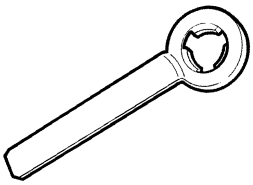	Wrench for camshaft rotation when adjusting valve clearance (bench operation)
99355040	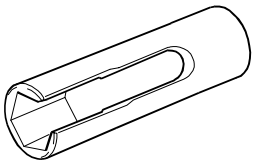	Bushing (17 mm) to remove engine oil level sensor from crankcase
99360091	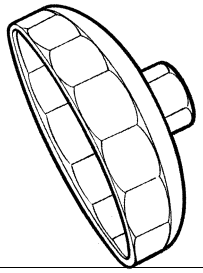	Tool to remove cartridge filters
99360183	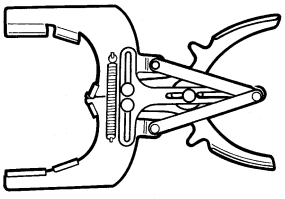	Pliers for mounting rings on engine pistons

TOOLS

TOOL NO.		DESCRIPTION
99360268	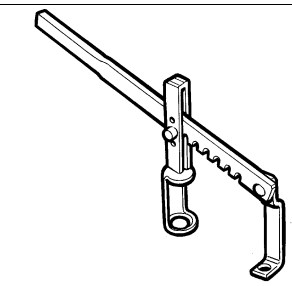	Tool for removing and refitting engine valves
99360288	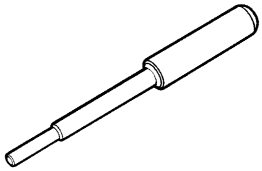	Punch for removing valve guides
99360291	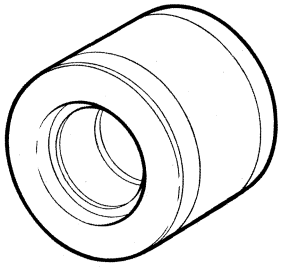	Punch for refitting valve guides (use with 99360288)
99360292	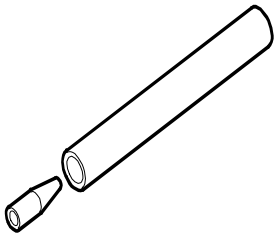	Keying device for mounting gasket on valve guide
99360306	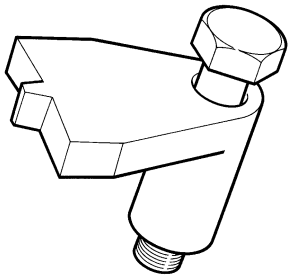	Tool to retain engine flywheel
99360309	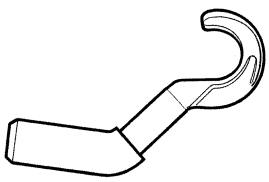	Tool retaining tappets to replace plate when adjusting valve clearance

TOOLS

TOOL NO.		DESCRIPTION
99360363	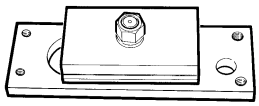	Mounting for securing injection pump control assembly and auxiliary assemblies when overhauling at the bench
99360508	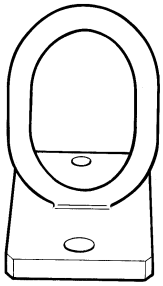	Rings for lifting cylinder blocks
99360550	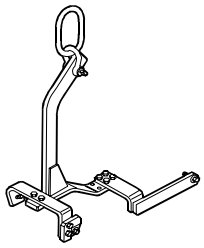	Arm for removing and refitting engine
99360605	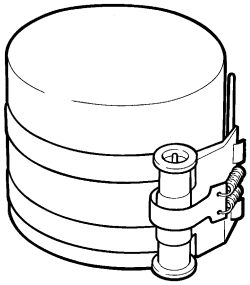	Band to insert standard and oversized pistons into the cylinders
99360607	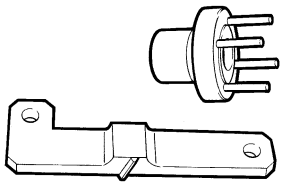	Parts to check oil pump drive shaft driving
99360608	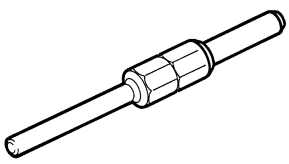	Tool for setting the timing gears

TOOLS

TOOL NO.		DESCRIPTION
99361004	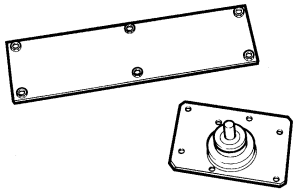	Mounting to support cylinder head when adjusting tappets
99361029	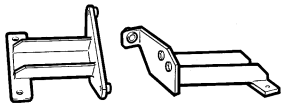	Brackets securing engine to rotary stand 99322205
99365014	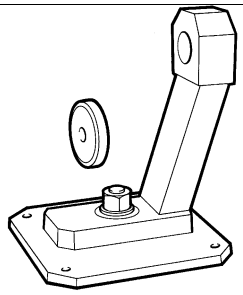	Adjustable mounting
99365147	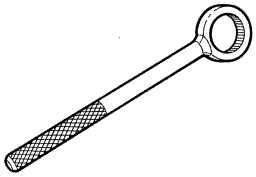	Injection pump coupling joint check wrench
99365160	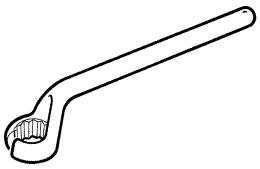	Wrench (17 mm) to remove injector pipes
99367121	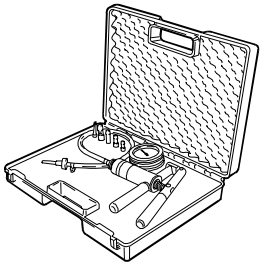	Vacuum and pressure hand pump

TOOLS		
TOOL NO.		DESCRIPTION
99370006	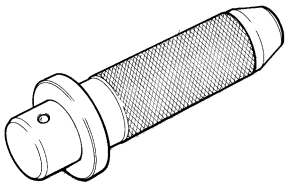	Interchangeable grip for punches
99370415	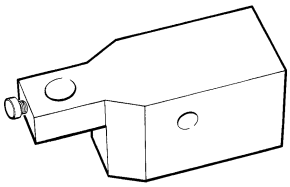	Dial gauge base to check piston balancing and pre-chamber plug protrusion
99374336	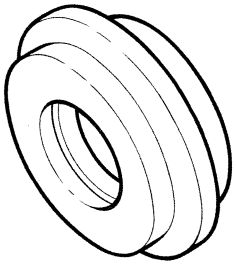	Keying device to mount gasket on camshaft front cover and on auxiliary member assembly (use with 99370006)
99387001	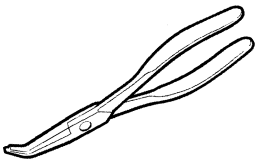	Pliers to recover valve clearance plates
99389829	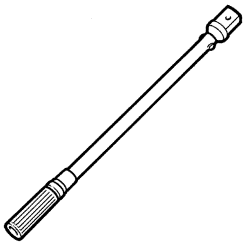	Torque wrench 9x12 (5-60 Nm)
99389833	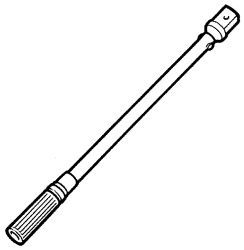	Torque wrench (for 8140.43S engine only)

TOOLS		
TOOL NO.		DESCRIPTION
99390310	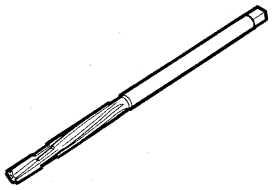	Valve guide smoothers
99394038	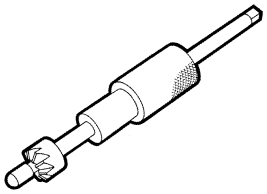	Milling cutter to regrind injector seat (8140.63 engine excluded)
99395098	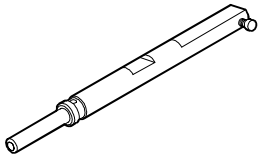	Tool for checking piston TDC (to be used with 99395603)
99395214	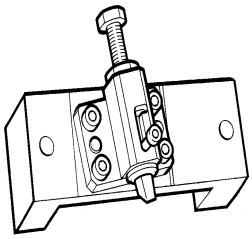	Gauge to position engine flywheel
99395216	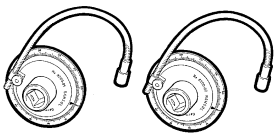	Pair of meters for angular tightening with square 1/2" and 3/4" connection
99395363	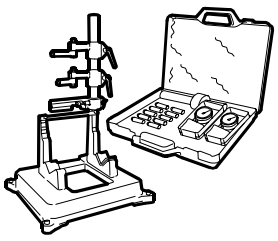	Complete square to check for connecting rod distortion

TOOLS

TOOL NO.		DESCRIPTION
99395603	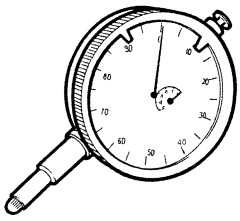	Dial gauge (0 ÷ 5 mm)
99395604	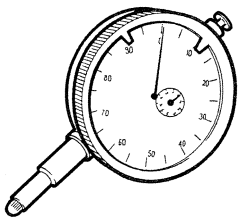	Dial gauge (0 ÷ 10 mm)
99395687	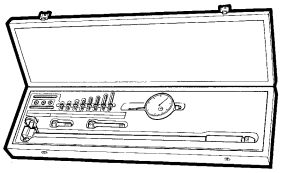	Bore meter (50 ÷ 178 mm)
99395849	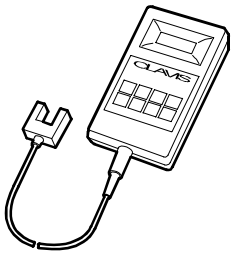	Belt tension tester (10.0 to 600 Hz frequency)

OVERHAULING ENGINE

540110 DISASSEMBLING THE ENGINE AT THE BENCH

Figure 30

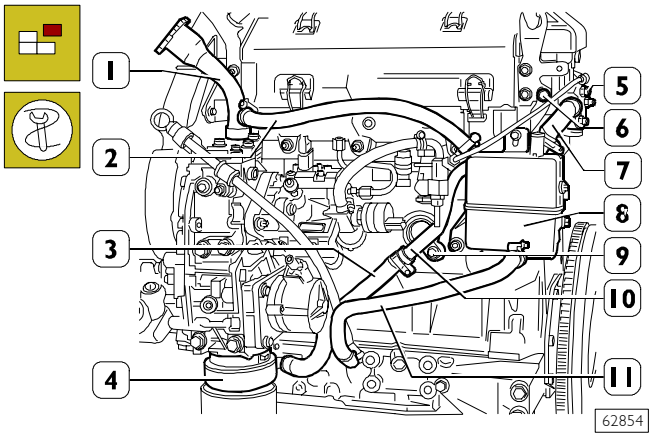

If the engine cable was not removed, disconnect its electrical connections from: thermostat temperature sensor, revs. sensor, engine rpm sensor, pressure regulator, 3rd pumping element cut-out device, rail pressure sensor, intake manifold air pressure/temperature sensor.
Remove the side cover, disconnect electrical connections from injectors and disconnect the engine cable.
Remove pipe (2) from hose (1).
To be able to fit the brackets 99361029 onto the crankcase to secure the engine to the stand for overhauling, on the left-hand side of the engine it is necessary to:

- ❑ disconnect the pipe (3) from the heat exchanger (4);
- ❑ disconnect the pipe (7) from the side cover (5);
- ❑ take out the screws (6 and 9) and remove the pipe (10) complete with pipes (3 and 7);
- ❑ disconnect the pipe (11) from the crankcase fitting.;
- ❑ disconnect the pipe (2) from the fillpipe (1);
- ❑ remove the oil vapour condenser (8) complete with pipes (2 and 11).

Figure 31

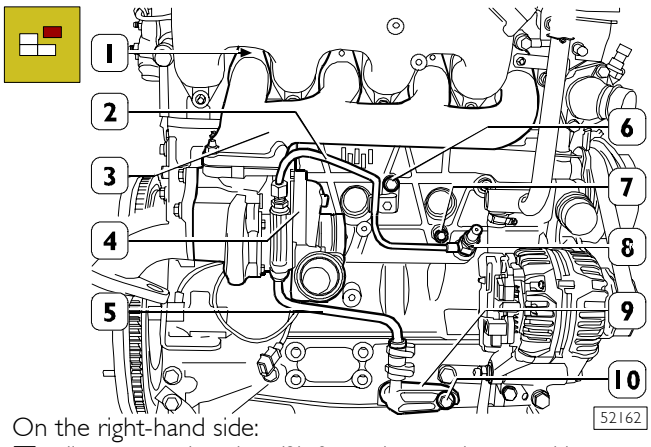

On the right-hand side:

- ❑ disconnect the pipe (2) from the crankcase, taking out the fixing screw (6) and the fitting complete with oil pressure transmitter (8);
- ❑ take out the threaded plug (7);
- ❑ take out the screw (10) and disconnect the fitting (9) from under the crankcase;
- ❑ take out the nuts (1) and remove the exhaust manifold (3) from the cylinder head complete with turbocharger (4) and oil pipes (2 and 5).

Block the turbocharger air/exhaust gas inlets and outlet to prevent foreign bodies getting inside.

Fit the brackets 99361029 to the crankcase and use these to secure the engine to the rotary stand 99322205. Drain the oil from the engine by removing the plug from the oil sump. Remove the fan from the electromagnetic coupling.

Figure 32

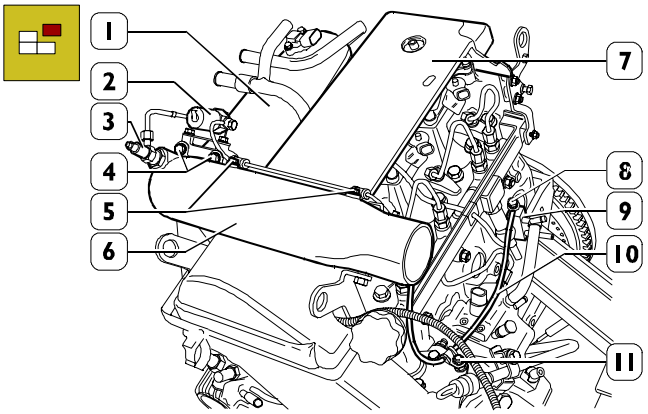

Remove pipe (10) connection (8) from connection (9). Remove screws (5) and pipe (10) clamps fastening nut (11). Remove nuts (4) and disconnect duct (6) including solenoid valve (2), glow plug (3) and pipe (10) from intake manifold (1), remove soundproof cover (7).

Figure 33

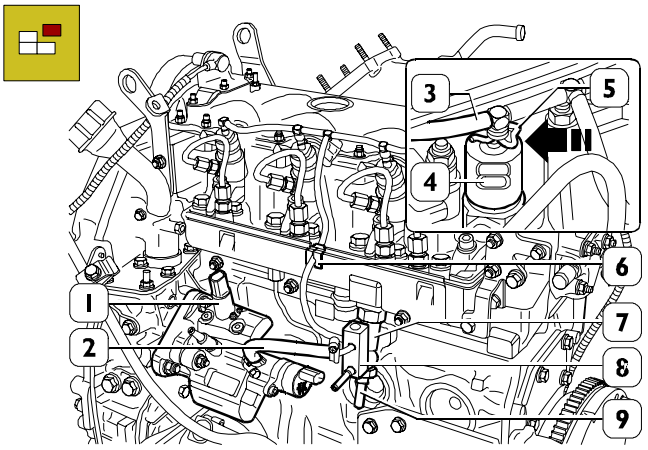

Press clips (5) in the direction shown by the arrow and disconnect fuel recovery pipe connection (3) from injectors (4). Disconnect pipe (2) from high pressure pump (1).
Hold the pressure relief valve (7) and remove hose (9) with connection (8) including pipe (3), plug (6) and pipe (2).

Figure 34

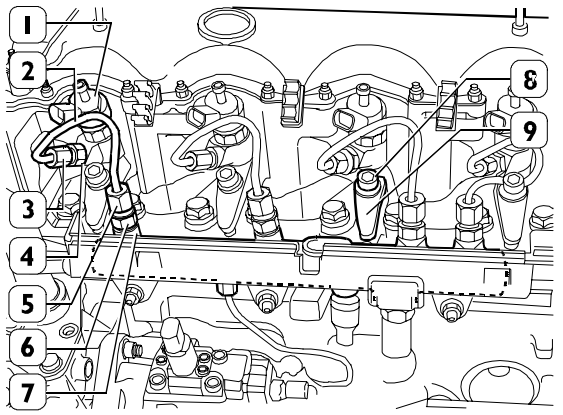

Disconnect the fuel pipes (2) from the electro-injectors (1) and from the hydraulic accumulator (rail) (7) as follows.
Keeping the hexagon (4) of the electro-injector (1) stationary with a wrench, undo the coupling (3) using the wrench 99365160.
Keeping the hexagon (6) of the flow limiting valve stationary, if applicable, unscrew the coupling (5) and disconnect the fuel pipe (2).
Take out the screws (8) fixing the brackets (9) retaining the electro-injectors (1).
Disconnect the electro-injectors (1) from the cylinder head.

For engine 8140.43S only.
Since engine No. 3089322, a rail with the same configuration but without flow limiters and pressure relief valve has been mounted. The same prescriptions specified for the previous one shall be complied with.

Figure 35

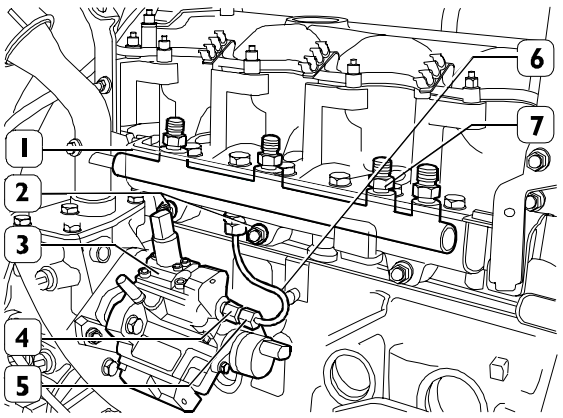

Disconnect the pipe (6) from the high-pressure pump (3) and from the hydraulic accumulator (rail) (7).

Stop high pressure pump hexagon (4) by means of the proper wrench when loosening connection (5).

Remove nuts (2) and then remove protection (1).

Figure 36

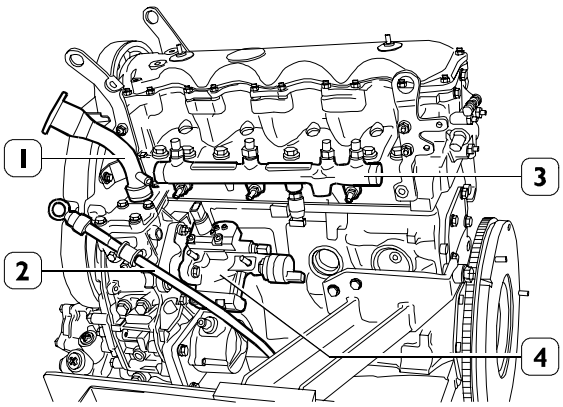

Disconnect: rail (3), high pressure pump (4), oil dipstick pipe (2) and oil filler (1).

Figure 37

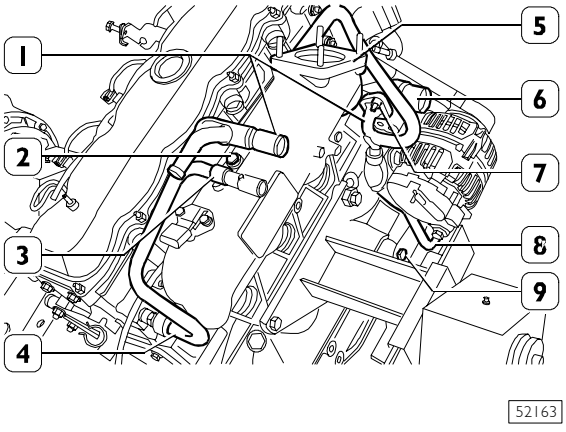

Remove the screw (2) fastening the pipe (4 and 1) bracket (3) to the intake manifold (5).
Remove the pipe (4) from the cylinder head.
Remove the nuts (7) fastening the pipe (1) to the water pump (6).
Remove the screw (9) fastening the pipe (8) to the bedplate.

Figure 38

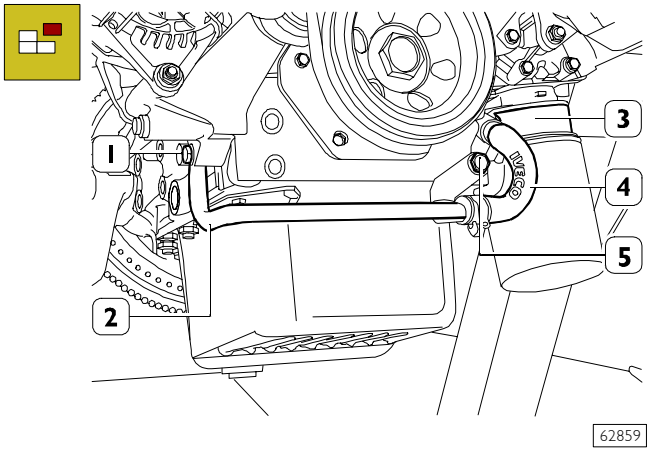

Disconnect the pipe (4) from the heat exchanger (3). Take out the screw (1 and 5) and disconnect the pipe (2) complete with pipes (1 and 8, Figure 33) from the crankcase base.

Figure 39

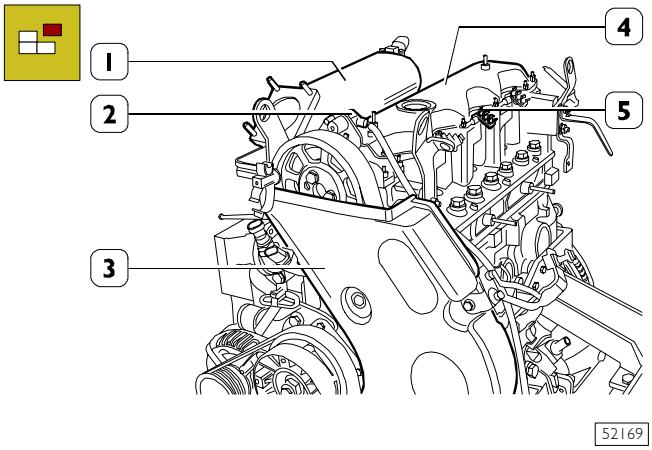

Remove the intake manifold (1), tappet cover (4) complete with speed sensor (2). Recover the brackets (5) and the timing cover (3).

Figure 40

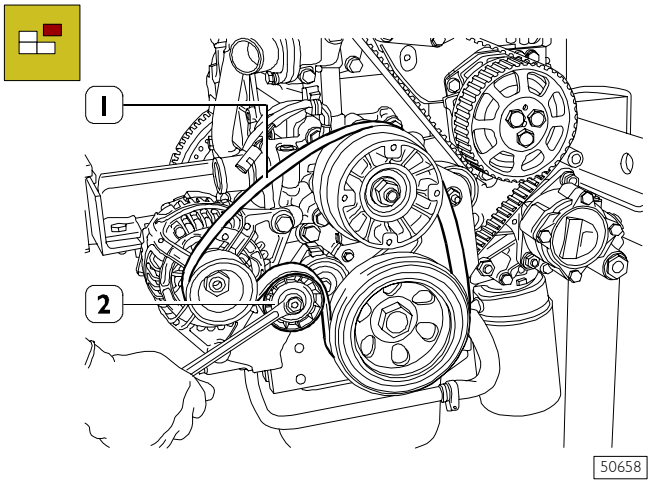

Using the right wrench on the automatic tightener (2), slacken the tension of the belt (1) and remove it.

Figure 41

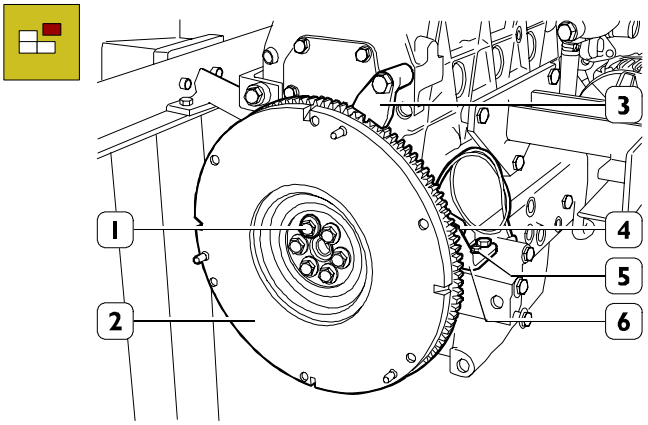

Using tool 99360306 (3), applied as shown in the figure, stop crankshaft rotation and loosen the screws (1) securing the flywheel (2). Take out the screws (5), remove the mounting (6) complete with speed sensor (4).

Figure 42

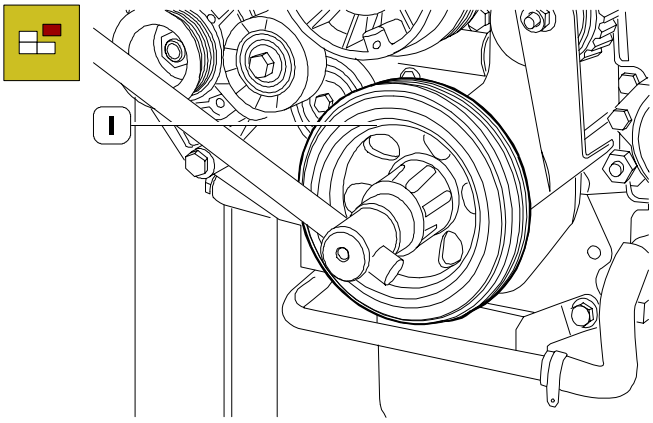

Take out the screw securing the pulley (1) to the crankshaft. disconnect the pulley (1) from the crankshaft and the spacer, if any.

Figure 43

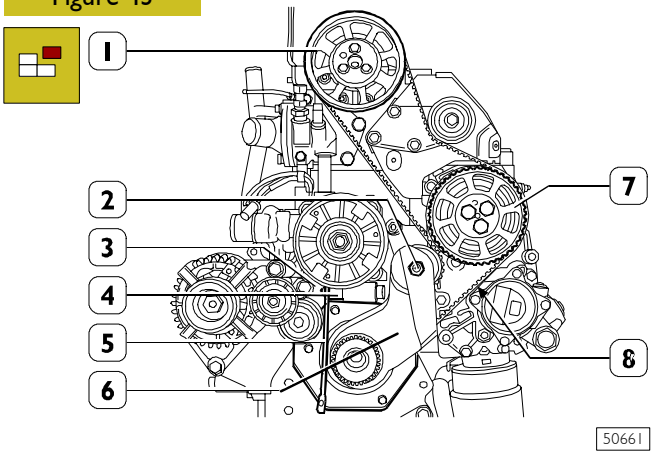

Loosen gear fixing screws (1 and 7). Fit proper wrench (5) between push rod (3) and belt tightener cylinder (4). Remove nut (2). Remove lower cover (6) and timing belt (8).

Figure 44

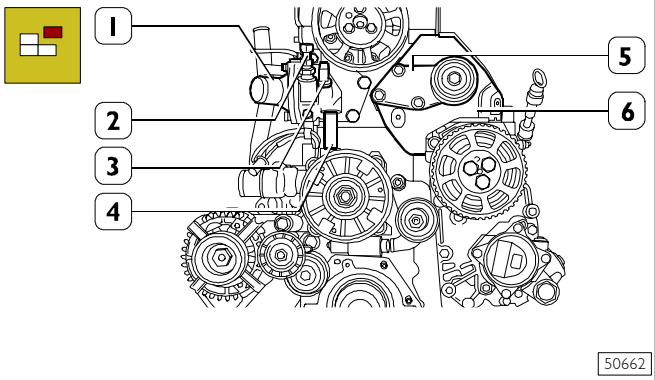

Remove the fixed tightener mounting (5) and the guard beneath (6).

Remove the thermostat box (1) complete with switches (2 and 3) and pipe (4).

Figure 45

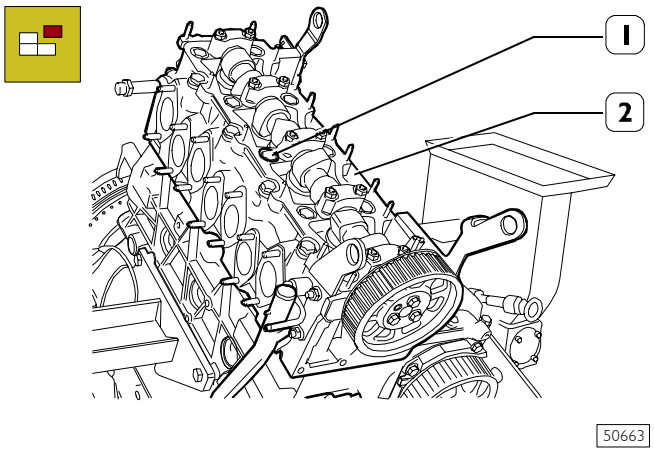

Unscrew the screws (1) securing the cylinder head (2) and remove it with its gasket.

Check the protrusion of the pistons as described in the relevant paragraph to check the possibility of facing the crankcase if it has deformed.

Figure 46

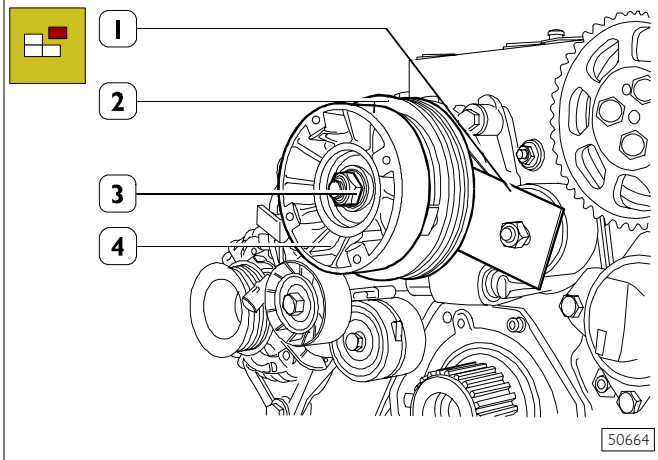

With a suitable plate (1) applied as shown in the figure, block rotation of the electromagnetic pulley (2), unscrew the nut (3) securing the hub (4) clockwise and remove the hub.

The hub nut (3) has a left-hand thread.

Figure 47

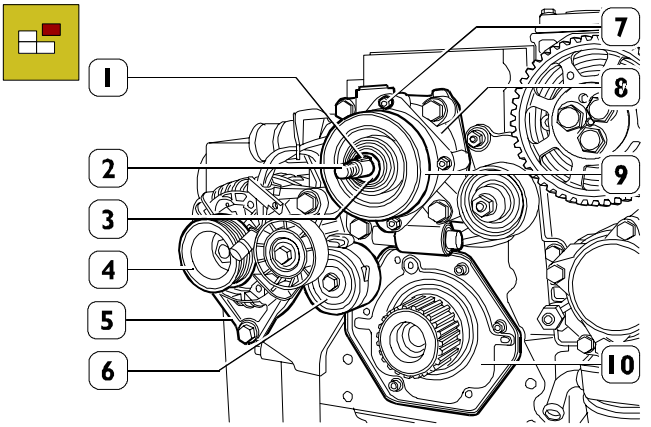

Remove the key (1) and washer (3) from the water pump shaft (2).

Extract the pulley (9) from the water pump shaft (2).

Take out the nuts (7) and extract the electromagnetic coupling (8).

Remove the mounting (5) complete with alternator (4) from the crankcase and from the water pump (2).

Remove the water pump (2).

Remove the adjustable tightener (6).

Remove the crankshaft front cover (10).

Figure 48

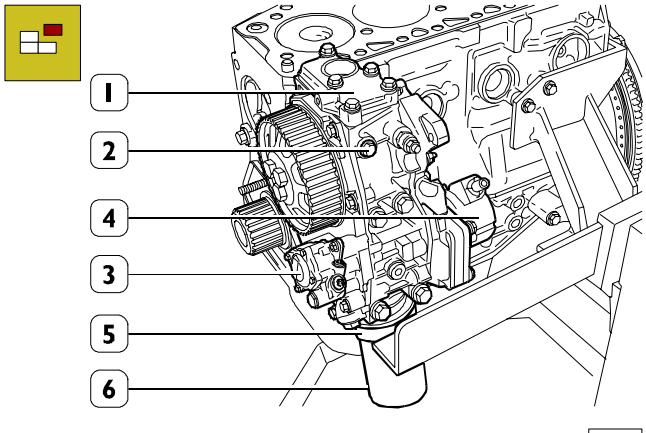

50666

Remove screws (2) and disconnect auxiliary component unit (1) including hydraulic power steering pump (3), vacuum device (4), oil filter (6) and heat exchanger (5).

Figure 49

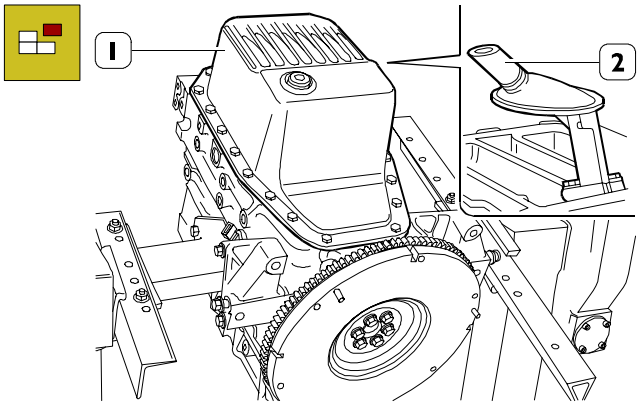

50667

Turn the engine 180° and take out the oil sump (1).

Take out the engine oil suction rose (2).

Figure 50

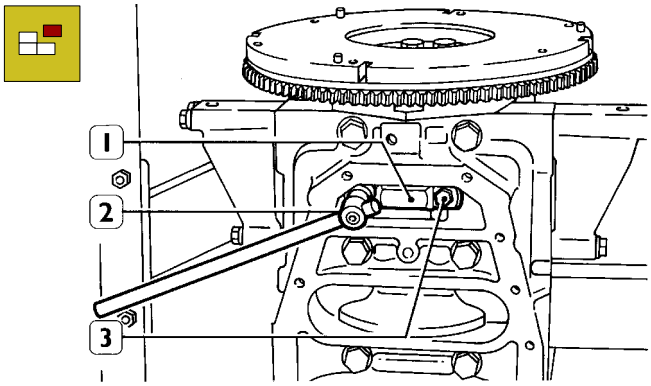

41090

Take out the tool 99360306 for blocking flywheel rotation.

Turn the engine 90° and loosen the screws (3) of the connecting rod caps (1) with the appropriate wrench (2).

To be able to remove the connecting rod cap (1, Figure 50) of the piston No. 4, take it to TDC.

Figure 51

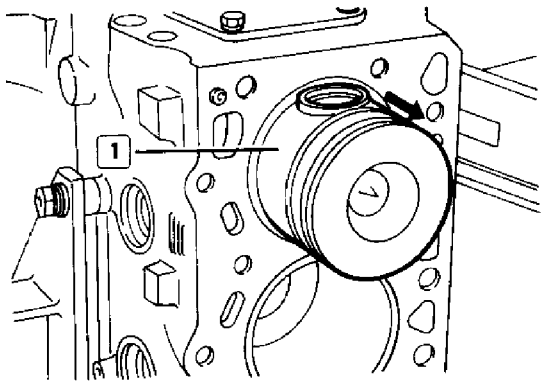

18830

Take out the screws fixing the connect rod caps, remove them and extract the pistons (1) from the top of the crankcase.

Keep the half bearings in their respective housings because, if utilized, they must be fitted in the same position they were in when dismantled.

Figure 52

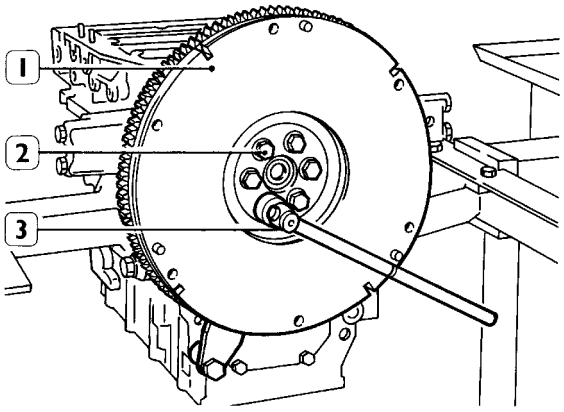

41091

Using the wrench (3), take out the screws (2) securing the engine flywheel (1) and remove it from the crankshaft.

Figure 53

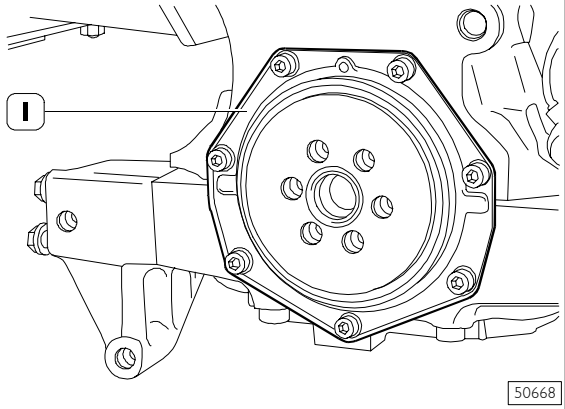

Remove the crankshaft rear cover (1) from the crankcase, complete with oil seal.

Figure 54

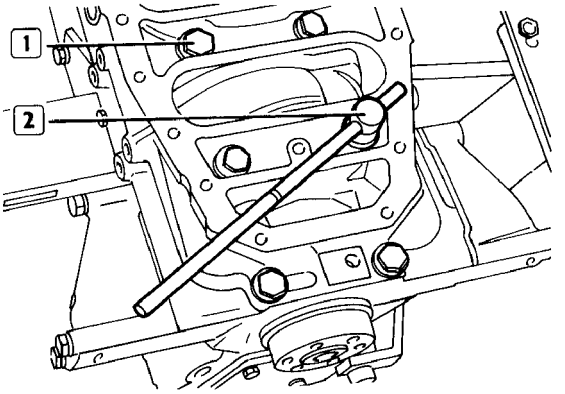

Unscrew lower/upper crankcase fastening screws (1) using wrench (2).

Figure 55

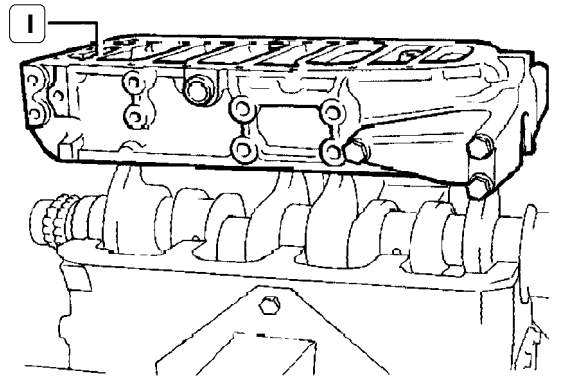

Remove lower crankcase (1) with its gasket.

At removal, take note of the assembling position of lower and upper crankshaft half bearings since if re-used they shall be refitted in the same position.

Figure 56

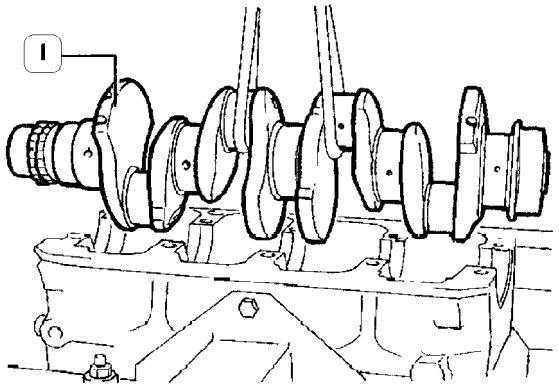

Remove crankshaft (1) using a hoist and a suitable rope.

Figure 57

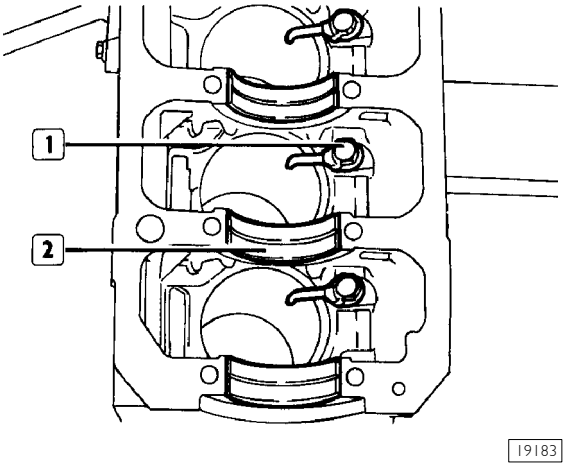

Recover main half bearings (2).

Straighten safety plate bends and remove oil spray nozzles (1).

REPAIR OPERATIONS

CYLINDER BLOCK

Checks and measurements

Figure 58

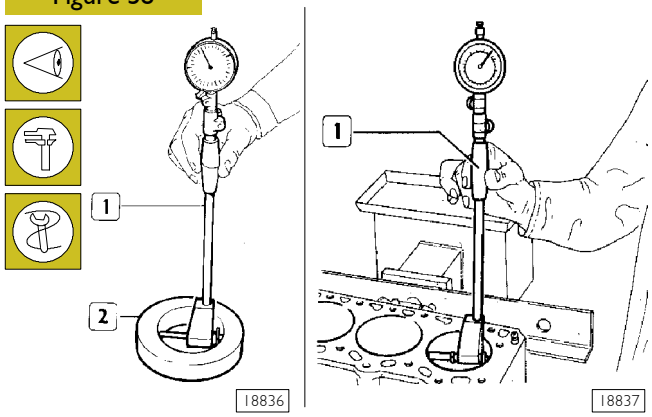

Once engine is dismantled, clean cylinder-crankcase group accurately.
For handling cylinder group use rings 99365508.
Make sure crankcase has no cracks.
Check working plug conditions. If rusted or not perfectly tightening, replace them.
Check cylinder liner surfaces: they should not show any traces of binding, scoring, ovality or excessive taper.
The inside diameter of the cylinder liners, in order to ascertain the extent of their ovalization, taper and wear, is checked with the bore gauge 99395687 (1) fitted with the dial gauge and reset on the ring gauge (2) of the diameter of the cylinder liner.

If ring gauge is not available use a micrometer to set to zero.

With reaming gauge 99395687 (1), equipped with centesimal comparator set to zero as previously described, check cylinder liner inside diameter, to verify the degree of ovality, taper and wear.

Figure 59

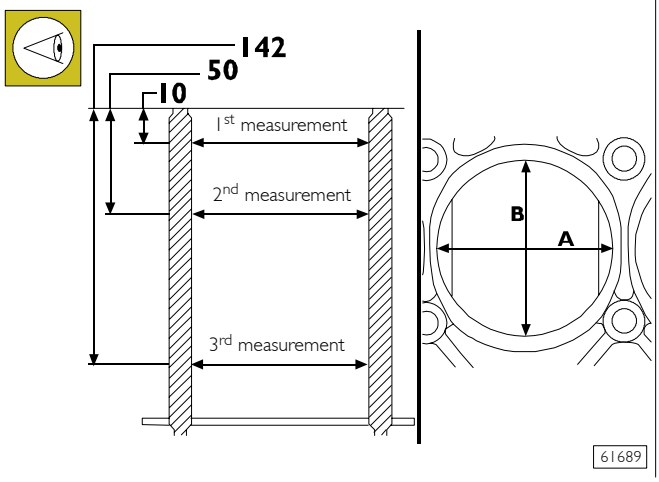

Measurements shall be taken for each cylinder, at three different heights on the barrel and on two perpendicular surfaces: the first one parallel to engine longitudinal axis (A) and the other one perpendicular (B); max. wear is generally found on this latter surface and in correspondence with the first measurement.
Bore/recondition and plateau finish by honing cylinder barrels if ovalization, excessive taper or any sign of wear are found.
Cylinder barrel reboring shall be performed according to the diameter of spare pistons oversized by 0.4 mm of rated value and prescribed assembling clearance. Should cylinder barrel be bored to higher diameter, oversize shall be performed by fitting a spare cylinder barrel and proceeding as described in the relevant chapter.

Figure 60

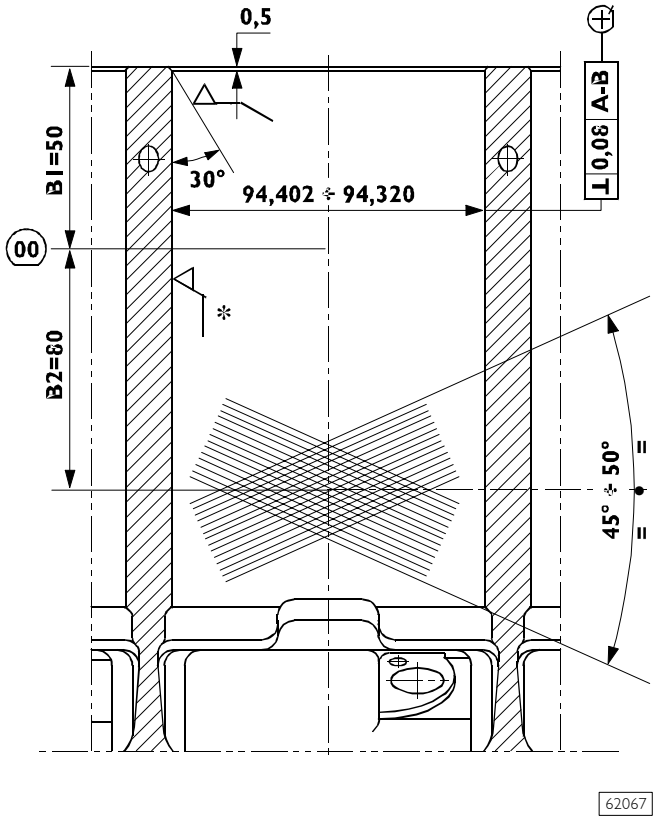

A - B = Main bearing longitudinal axis
* Surface roughness parameters
R1 = 4 ÷ 10 µm
Rz = 3 ÷ 8 µm
Ra = 0.3 ÷ 0.6 µm
W1 < 2 µm

Admitted surface pores with machined cylinder

ZONE B1 = max. stress area between piston ring/barrel: two non-continuos pores, max. 0.5 x 0.5 admitted — C — 100%

ZONE B2 = area interested by piston ring sliding: two non-contiguous pores, max 1x0.8 admitted — C — 100%

Checking head mating surface on cylinder block

Figure 61

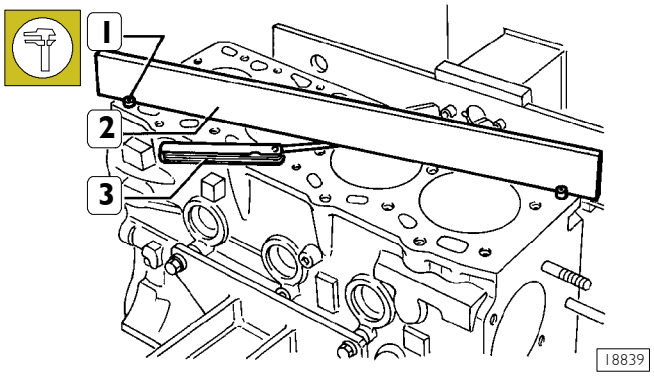

Make sure mating surface, on cylinder block, does not show any deformations.
This check can be done, after removing setscrews (1), with a soot-coated surface plate or with a gauged rule (2) and thickness gauge (3).
Once deformation areas are detected, flatten supporting surface with a grinder.

Crankcase flattening can be performed only after being sure that, once the work is completed, piston protrusion from cylinder liner will not be greater than specified value.

Figure 63

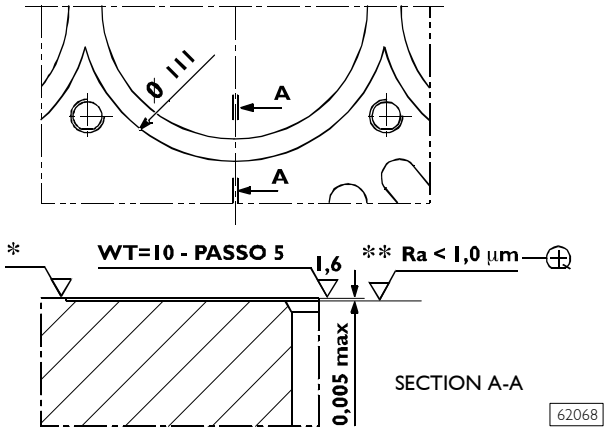

* Engine block surface
** Spot-faced surface Ø 111

When levelling is over, reset cylinder barrel spot-facing and bevelling as shown in the figure.
Check main bearing housings as follows:

- ❑ Fit lower crankcase on upper crankcase, without bearings and gaskets;
- ❑ tighten fastening screws to specified torque;
- ❑ with a suitable inside diameter comparator, make sure the seat diameter is equal to specified value.

If a greater value is found, replace crankcase.

Spare cylinder barrel fitting

Figure 62

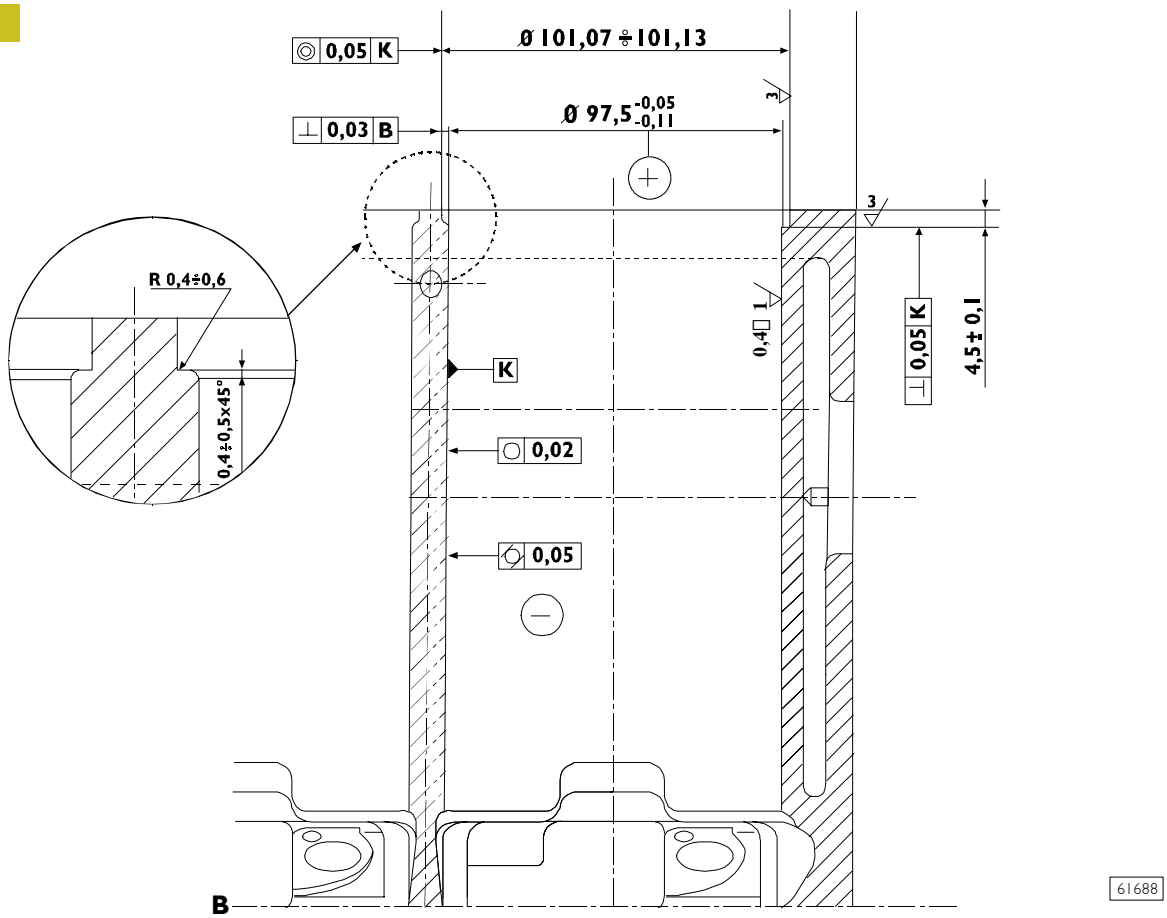

B = Main bearing longitudinal axis

Implement cylinder barrel seats into engine block by boring the latter at the values shown in the above figure, so as to obtain the average diameter measured according the methods described in the following

Figure 64

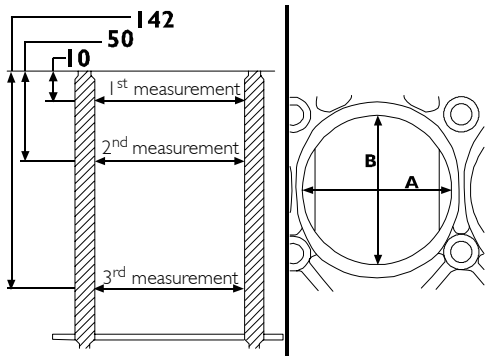

Measurements shall be performed for every four barrel seats at three different heights and on two perpendicular surfaces: the first one parallel to engine longitudinal axis (A) and the other one perpendicular (B) as shown in the diagram.

Average diameter **D_1med** shall be calculated according to the following formula:

$$D_1\ med = \frac{A_1(10) + A_1(50) + A_1(142) + B_1(10) + B_1(50) + B_1(142)}{6}$$

It shall be $97.500\ ^{-\ 0.05}_{+\ 0.11}$, the difference between max diameter D_{max} and min. diameter Dmin shall be: D_{max} - D_{min} = ≤ 0.03 mm

Value between brackets corresponds to the measurement point from upper block edge.

After implementing the proper seats, barrel fitting into cylinder unit shall be performed by hydraulic press and plate as follows:

- ❑ Check whether cylinder barrel outside diameter is equal to the prescribed value.
  Avoid using oil or grease when driving barrels;
- ❑ set barrel into block and check whether at 80 mm driving the load is ≥ 1300 daN;
- ❑ proceed with driving and check whether load is ≥ 5000 daN when driving is over;

Figure 65

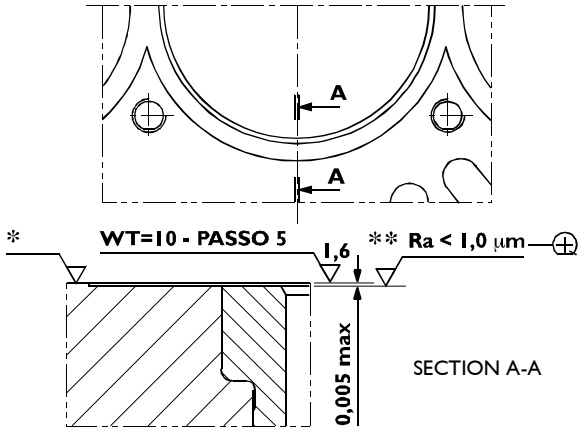

* engine block surface - ** spot-faced surface ∅ 111 mm

- ❑ to prevent breakage, check whether barrel edge is perfectly resting on block:
  cylinder barrel shall not protrude by 0.005 above block bottom.

Otherwise, replace the cylinder barrel.

After driving in the cylinder liners, machine them to the tolerance and roughness indicated in the "Checks and measurements" section.

Figure 66

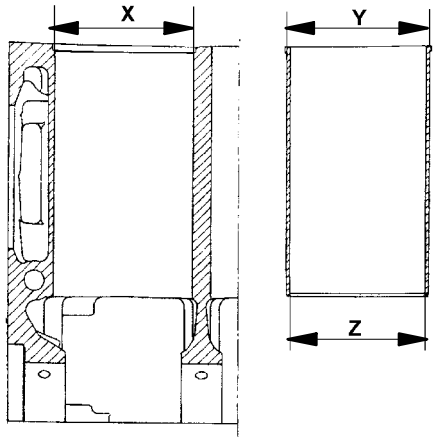

X = D m	97.390 ÷ 97.450
Y = barrel outside ∅	97.470 ÷ 97.500
Z = barrel inside ∅	92.700 ÷ 92.900
*	94.402 ÷ 94.432
* Dimension to be obtained after driving the liner into the crankcase at the end of the work.	

5408 CRANKSHAFT

540810 Measuring main journals and connecting rods

Figure 67

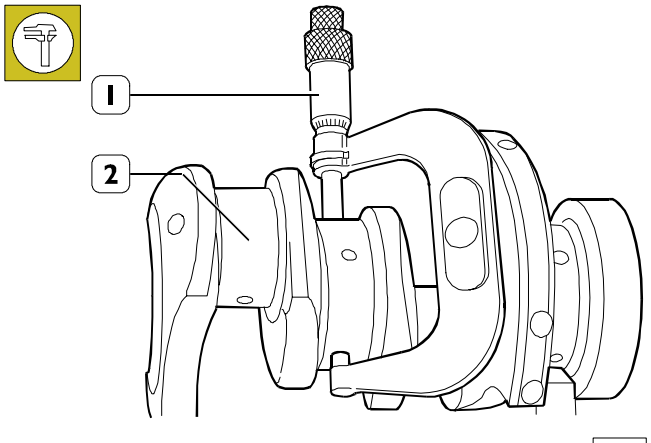

If any traces of seizing, scoring or excessive ovalitys are detected on main journals and crank pins it is necessary to regrind journals (2), measure crank pins with micrometer (1) in order to determine to which diameter pins must be reduced.

It is advisable to record measured values on a table. See Figure 68.

Undersize classes are of: 0.254 - 0.508 mm.

Main journals and crank pins must be all ground to the same undersize.
The performed undersize, on main journal and crank pins, must be identified by a special printing applied on the side of crank arm n.1.
For undersized crank pins: letter M
For undersized main journals: letter B
For undersized crank pins and main journals: letter MB

Figure 68

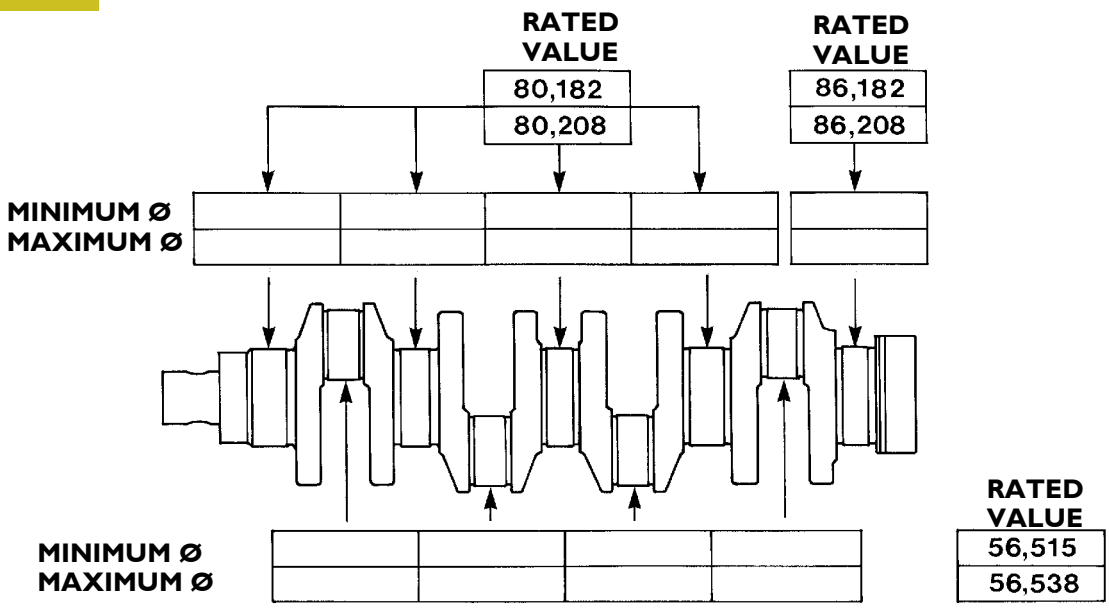

TABLE ON WHICH MEASURED VALUES OF MAIN JOURNALS AND CRANK PINS OF CRANKSHAFT MUST BE RECORDED

Figure 69

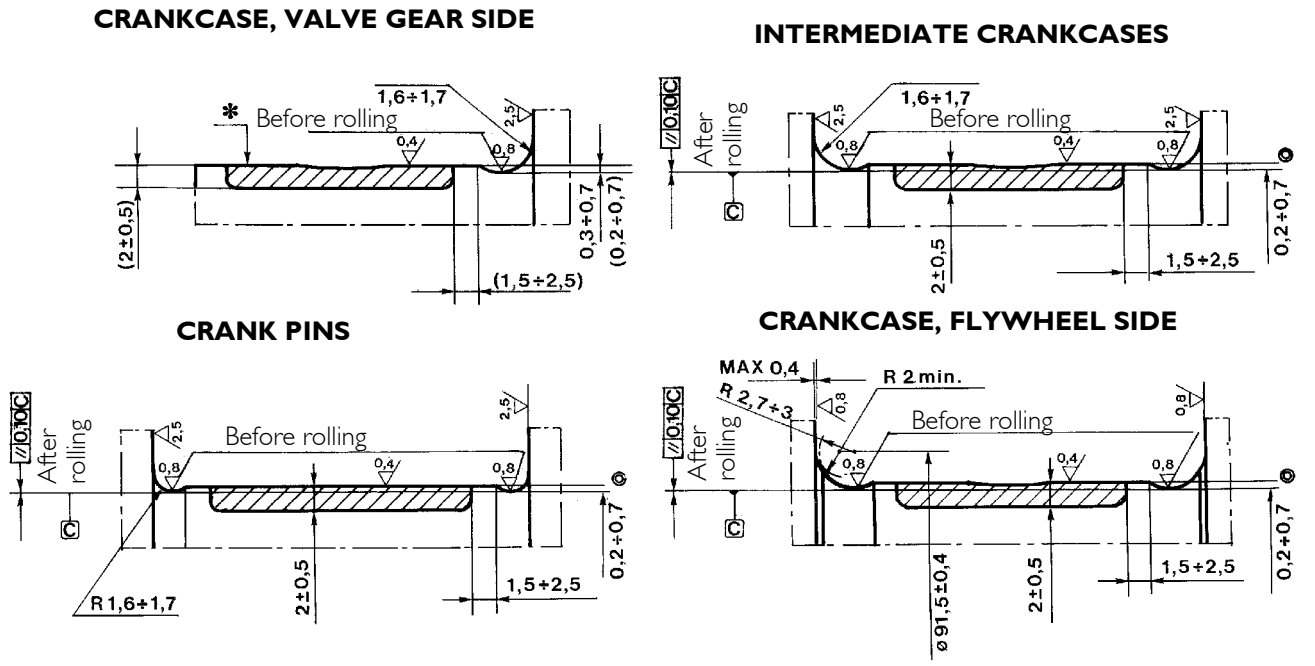

MAIN DATA ON MAIN JOURNALS AND ON CRANKS PINS

Since when reducing by 0.254 or 0.508 mm crank pin or main journal diameters, the rolled section of their side grooves can be damaged, grooves shall be turned according to data shown in the figure and rolling shall be performed according to the following specifications.

Rolling force:

- 1st main journal 925 ± 25 daN
- 2nd - 3rd - 4th - 5th main journal 1850 ± 50 daN
- 1st - 4th crank pin 1850 ± 50 daN
- 2nd- 3rd crank pin 2040 ± 50 daN
- rolling turns: 3 approaching, 12 actual, 3 output turns
- rolling speed: 56 rev/min
- crank pin groove depth reduction after rolling: 0.15 ÷ 0.30 * mm
- main journal groove depth reduction after rolling: 0.15 ÷ 0.35 * mm

* measured with 2.5 mm diameter gauged pins

Checking crankshaft

Figure 70

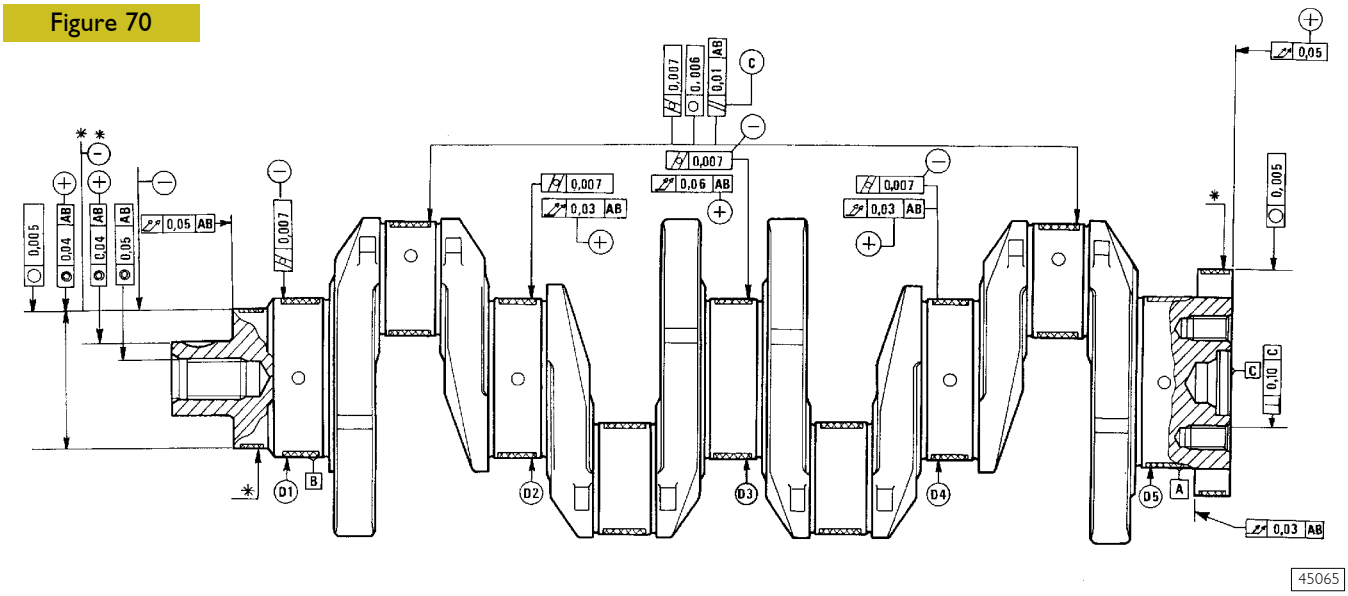

CRANKSHAFT MAIN TOLERANCES

TOLERANCES	CHARACTERISTIC SUBJECT TO TOLERANCE	GRAPHIC SYMBOL
OF SHAPE	Circularity	○
	Taper	⌭
OF ORIENTATION	Parallelism	//
	Perpendicularity	⊥
OF POSITION	Concentricity	◎
OF OSCILLATION	Circular oscillation	↗
	Total oscillation	↗↗

CLASS OF IMPORTANCE ATTRIBUTED TO PRODUCT CHARACTERISTICS	GRAPHIC SYMBOL
CRITICAL	©
IMPORTANT	⊕
SECONDARY	⊖

Figure 71

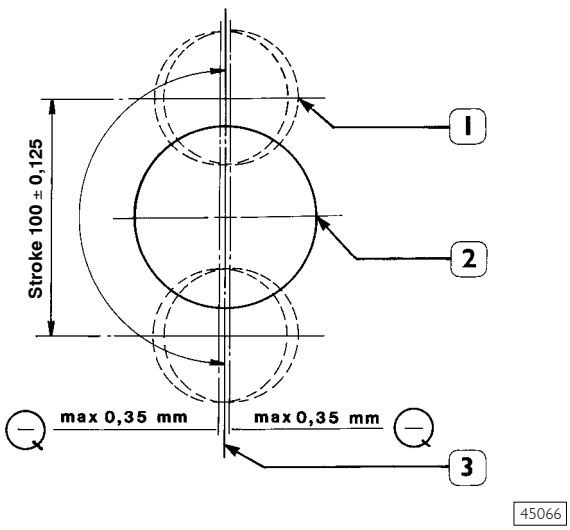

The checks of tolerances indicated in the figures must be carried out after grinding crankshaft pins, if necessary.

SYMMETRY OF MAIN JOURNALS AND CRANK PINS
1. Crank pins
2. Main Journals
3. Normal position.

Once grinding is completed, observe the following notices:

- ❑ Round the burr edges of main journals and crank pins lubricating holes;
- ❑ remove oil duct sealing plugs, reface seats with a suitable miller to remove any calking, clean ducts accurately, fit plugs using a suitable tool (1, Figure 72) and calk them on the relevant seats;
- ❑ make sure the plugs do not show any leakage under an inner pressure of 1.5 bars.

Replacing gearbox input shaft centering ring

Figure 72

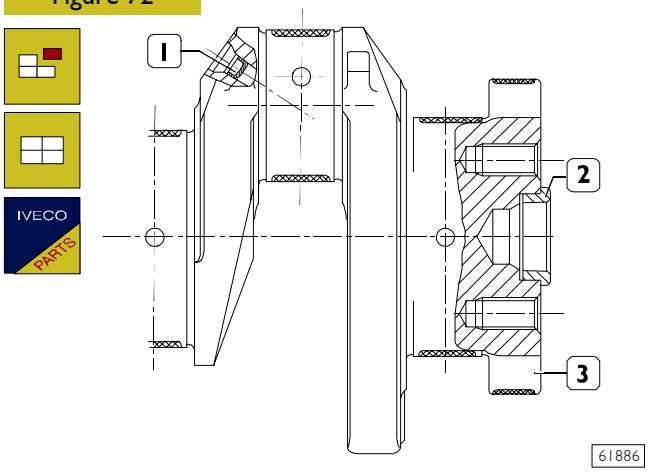

Use puller 99348004 to remove drive shaft (3) gearbox input shaft centering ring (2).
Use a generic tool for refitting.

Replacing timing control gear

Figure 73

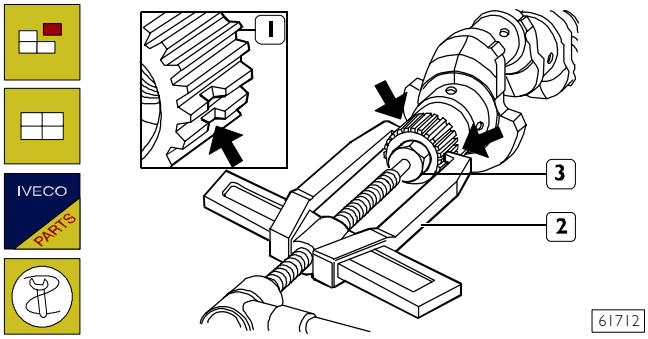

Should timing gear toothing be damaged or worn, proceed with removal as follows:

- ❑ mill the gear (1) twice in the points shown by the arrows and then use extractor 99348001 (2) and block (3) to remove the gear.

To fit the new gear on the drive shaft, the gear shall be heated so that ≥ 200 °C temperature difference is present between the two parts and gear keyhole shall coincide with shaft spline.
After fitting, under 900 N load, gear must not be withdrawn from shaft.

Max. gear heating temperature is 350°C.

ENGINE ASSEMBLY

When fitting the engine, replace always: safety spring rings, sealing rings and gaskets.

Figure 74

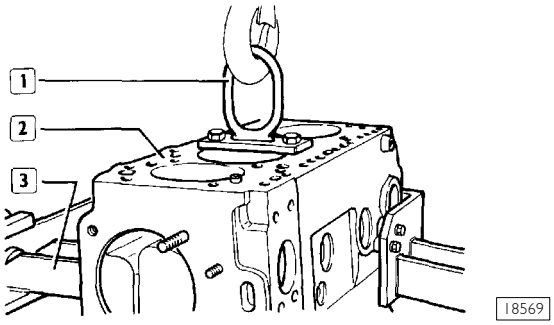

By means of ring 99360508 (1) lift engine block (2) and secure it on rotating stand 99322205 with clamps 99361029 (3).

Figure 75

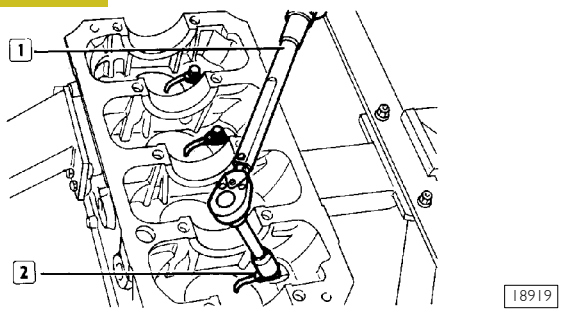

Rotate engine block, fit oil spray nozzles (2) with the respective safety plates and tighten screws with a torque wrench (1) to specified torque.
Bend safety plates on screws.

Fitting main bearings

Figure 76

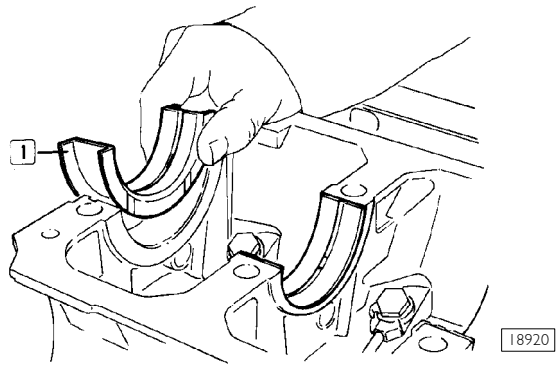

Having not found the need to replace small end bearings, refit them in the same order and position they were before being dismantled.

Small end bearings (1) are supplied as spare parts, with an undersized inside diameter of 0.254 - 0.508 mm.

Do not perform any adaptation on bearings.

Put the main bearing shells (1) with the lubrication hole into their respective seats.

540811 Measuring main journals assembly clearances

Figure 77

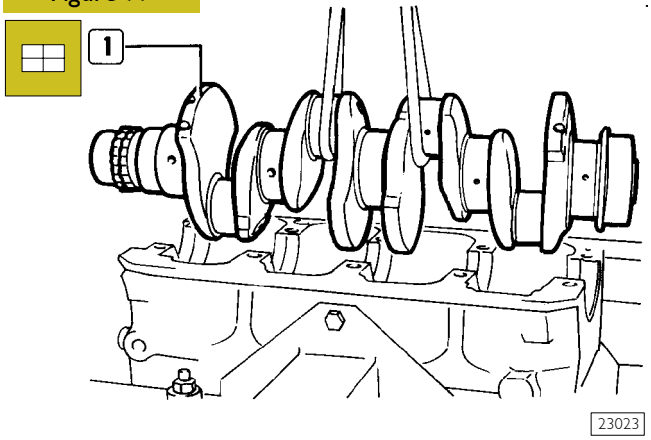

Fit crankshaft (1).
Check the clearance between crankshaft main journals and respective bearings, proceeding as follows:

- ❑ clean carefully the journals;
- ❑ apply a calibrated wire on main journals.

Figure 78

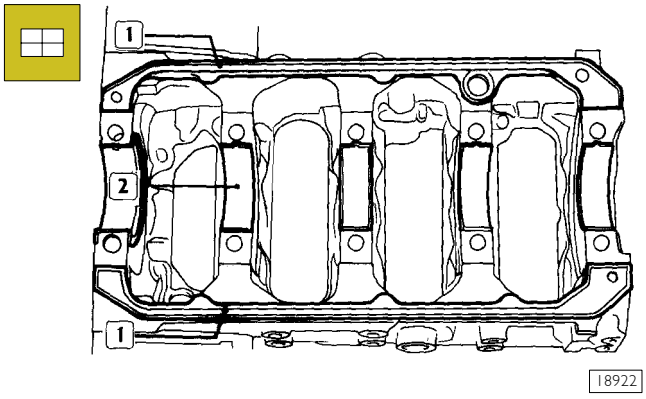

- ❑ Set rubber sealing gaskets (1) and small end bearings (2) on lower crankcase.

Figure 79

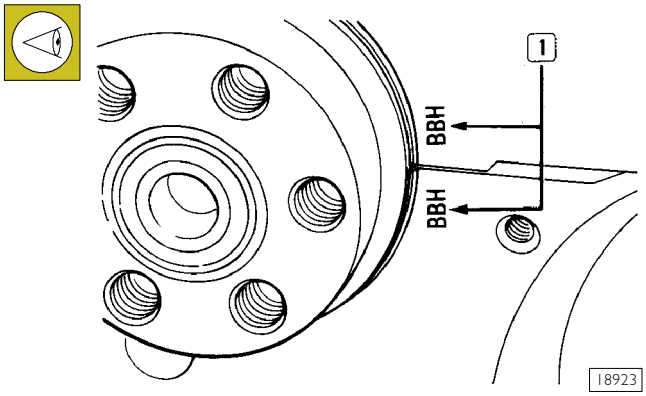

- ❑ Fit the lower crankcase on the upper crankcase, verifying that reference marks (1) correspond, since the parts component crank- case are not interchangeable.

Figure 80

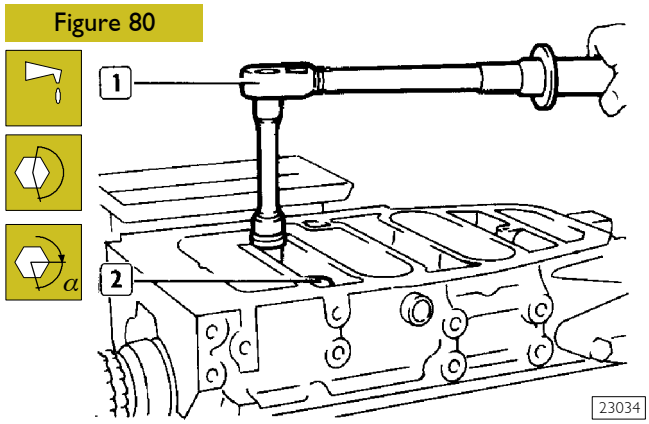

- ❑ Screw and tighten screws (2) according to the following two stages:
- ❑ 1st stage: by torque wrench, to 50 ± 5 Nm;
- ❑ 2nd stage: 90° ± 5° angle tightening according to the following diagram.

Figure 81

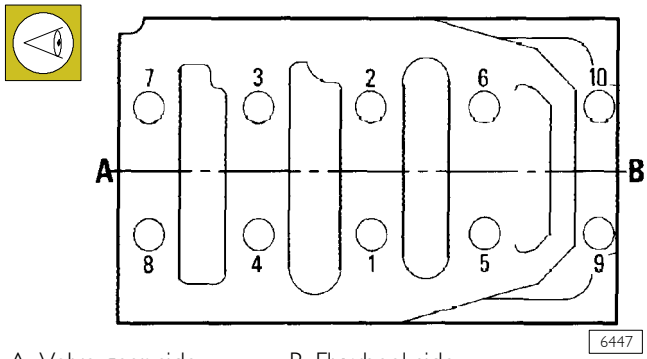

A. Valve gear side B. Flywheel side

Tightening order diagram of lower/upper crankcase fastening screws.

Figure 82

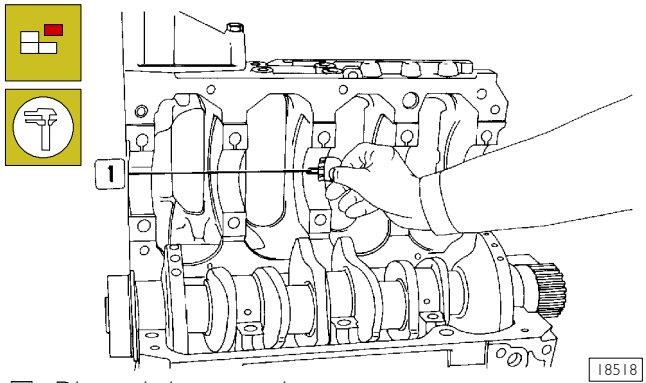

- ❑ Dismantle lower crankcase.

The clearance between small end bearings is calculated by comparing the width the calibrated wire has reached, in the point of greater deflection, with the scale graduation indicated on the envelope containing the calibrated wire.
The numbers indicated on the scale indicate the coupling clearance, in millimetres, that must be of 0.032 ÷ 0.102 mm.
If a clearance different than that specified is found, replace half bearings and repeat the check; once the prescribed clearance is obtained, lubricate small end bearings and fit lower crankcase definitively, tightening fastening screws as described previously.

Checking crankshaft end float

Figure 83

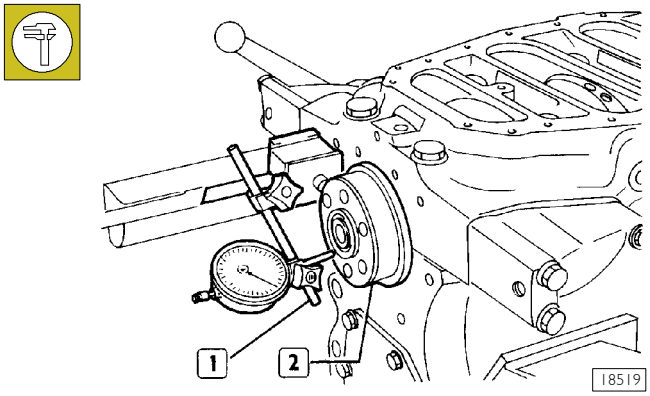

End float check is carried out by placing a magnetic-base dial gauge (1) on crankshaft (2), as shown in the figure; the normal assembly clearance is of 0.060-0.310 mm.
If a greater clearance is found replace rear small end thrust bearings and repeat float check between crankshaft pins and small end bearings.

Checking alignment pulley crankshaft

Figure 84

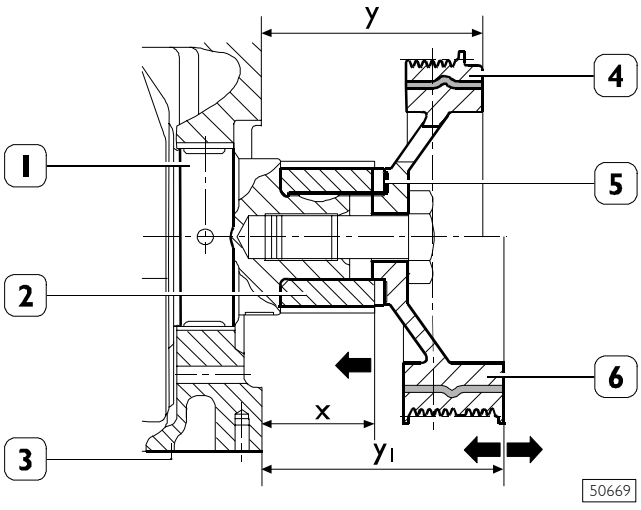

Push the crankshaft (1) towards the flywheel side so as to keep the crankshaft end in contact with the thrust bearing.
In these conditions, measure the distance **X** between the crankcase (3) and the end of the gear (2). If the distance **X** is 53.82 ÷ 54.55 , it is necessary to place a spacer n 98428488 (5) (thickness 0.5 ± 0.05 mm) between the gear (2) and the pulley (4 or 6). If the distance **X** is 54.56 ÷ 55.12, don't apply the spacer.
Mount the pulley (4), (engine without air-conditioner compressor) or (6), (engine with air-conditioner compressor).
Measure the distance **Y** or **Y1** between the end of the pulley (4 or 6) and the crankcase at the two extreme positions of crankshaft end float.

Y = 89.67 ÷ 91.03 mm
Y^1 = 107.17 ÷ 108.53 mm

540460 Rear crankshaft cover

Figure 85

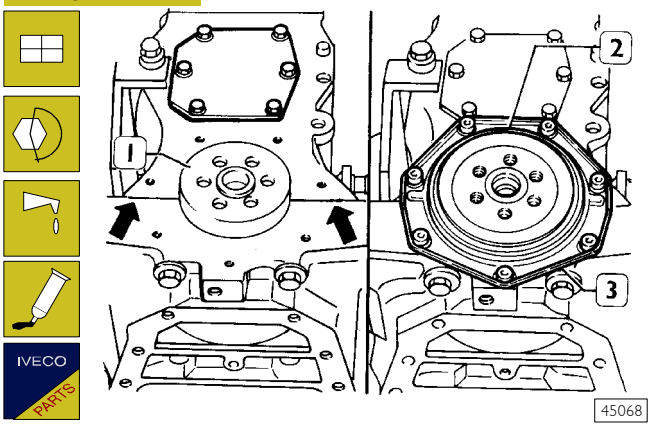

The rear (3) and front (1, Figure 86) covers of the crankshaft have the "ROTOSTAT" type gasket integrated.

The covers are supplied as spare parts together with the chock (2). The chock (2) must not be removed from the gasket until this has been fitted on the crankshaft.
In addition, the thickness of the cover is not the same as that of the first assembly.
This is to prevent its lip from getting onto the shank of the crankshaft in exactly the same position where it could be worn.

Trim any gasket excess in the points indicated by the arrows. Lubricate crankshaft (1) shank. Fit rear gasket (3) and tighten screws to specified torque. Remove chock (2).

540440 Front crankshaft cover

Figure 86

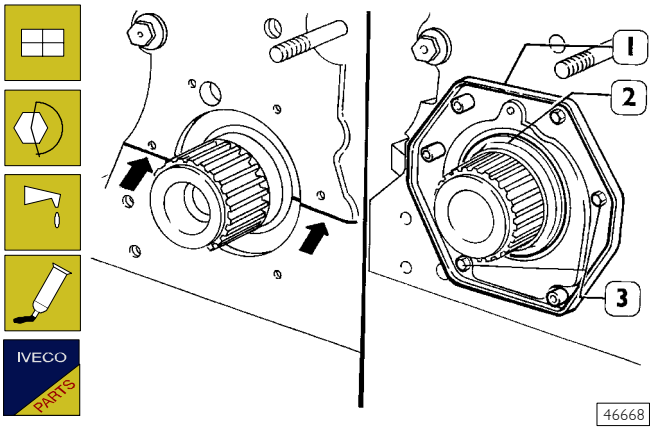

The crankshaft rear cover (1) is made up of a 'ROTOSTAT' type gasket. The gasket is supplied in a kit with an installer (2) which should not be separated from the gasket before the latter has been assembled on the crankshaft.

Cut the exceeding seal in the point shown by arrows.
Lubricate drive shaft shank. Fit front cover (1) and tighten fixing screws (3) to the specified torque. Remove chock (2).

The remaining fixing screws should be mounted after positioning the belt guard.

540850 ENGINE FLYWHEEL

Figure 87

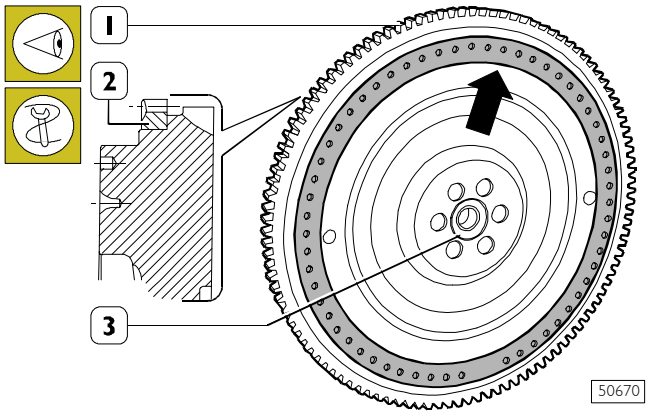

Make sure there are no blisters, cuts or damage of any kind anywhere on the surface of the flywheel (1) shown by the arrow, otherwise replace flywheel.
Check clutch disk bearing surface. If it shows any scoring it is necessary to lathe-shape it.

Flywheel rated thickness is 53 mm.

540852 Replacing bearing supporting gearbox input shaft

Gearbox input shaft supporting bearing (3) dismantling and refitting is carried out by means of a common punch.

540853 Replacing engine flywheel ring gear

Check the state of the teeth of the ring gear (2). If any teeth are broken or excessively worn, remove it from the flywheel (1) with a general-purpose punch and fit the new one, after heating it to a temperature of 150°C for 15 ÷ 20 min. The bevel, made on the internal diameter of the ring, must be facing towards the flywheel.

Figure 88

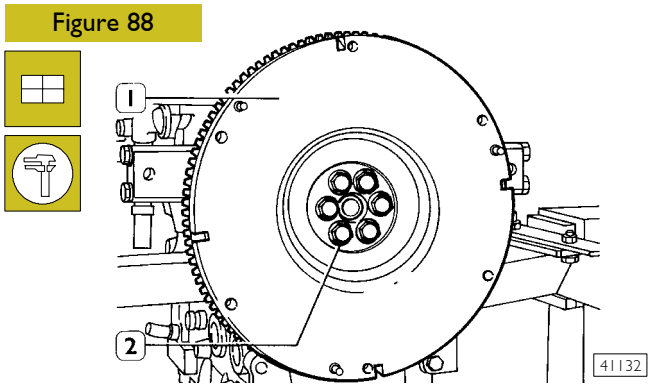

Fit engine flywheel (1) without tightening fixing screws (2).

For final screw (2) tightening see chapter "Flywheel setting".

Before reusing flywheel fastening screws verify with a micrometer that threading diameter of the screws is not less than 10.8 mm in any point, otherwise replace them.

5408 CONNECTING ROD - PISTON ASSEMBLY

Figure 89

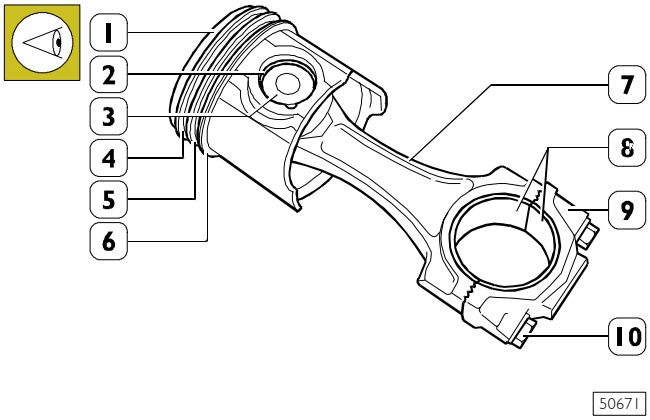

CONNECTING ROD - PISTON ASSEMBLY
1. Piston - 2. Pin - 3. Split ring - 4. Sealing ring - 5. Oil scraper ring - 6. Slotted oil scraper ring with spiral spring - 7. Connecting rod body - 8. Half bearings - 9. Connecting rod cap - 10. Cap fastening screws.

Check pistons: they must not show any trace of seizing, scoring, cracks or excessive wear, otherwise replace them.

Figure 90

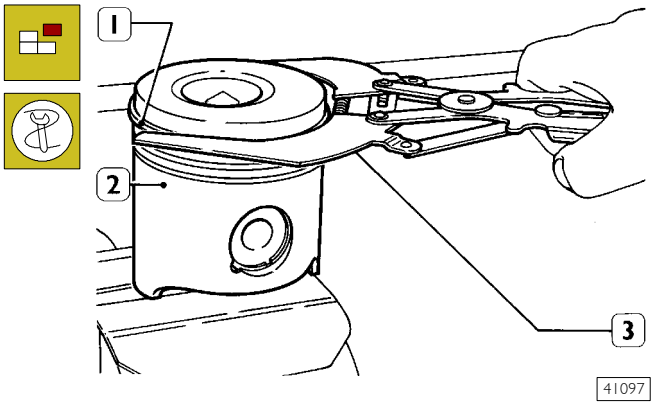

Remove split rings (1) from piston (2) with pliers 99360183 (3).

Figure 91

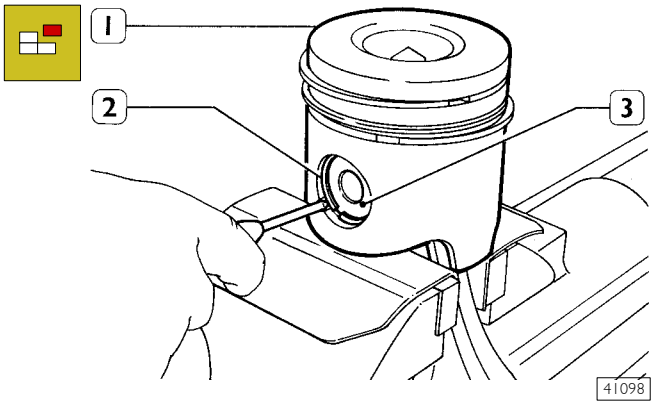

Remove piston (1) from connecting rod by removing split ring (2) and extracting pin (3).

Figure 92

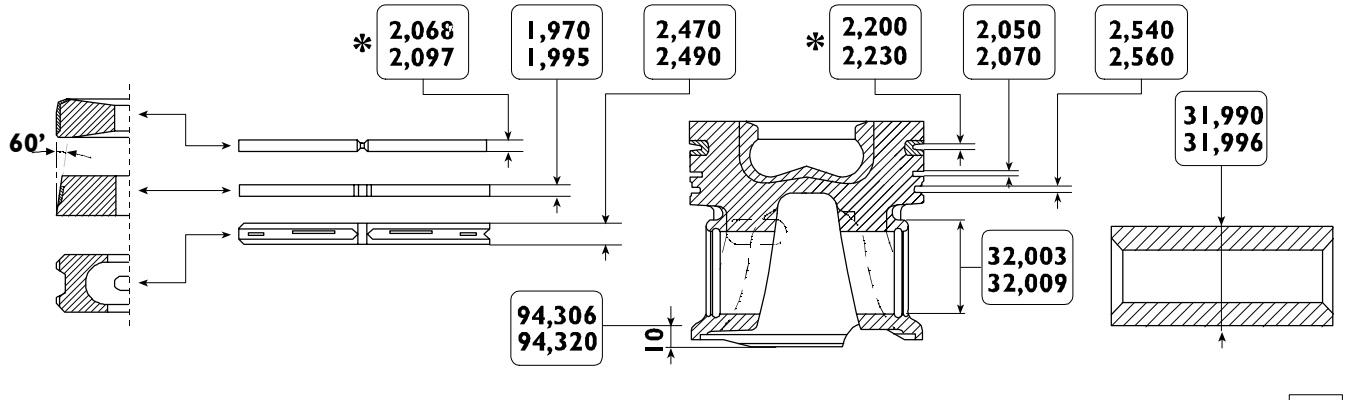

MAIN DATA FOR KS PISTON, PINS AND PISTON RINGS - ENGINES 8140.43B/R/S

*Measured on the diameter of 91.4 mm.

Figure 93

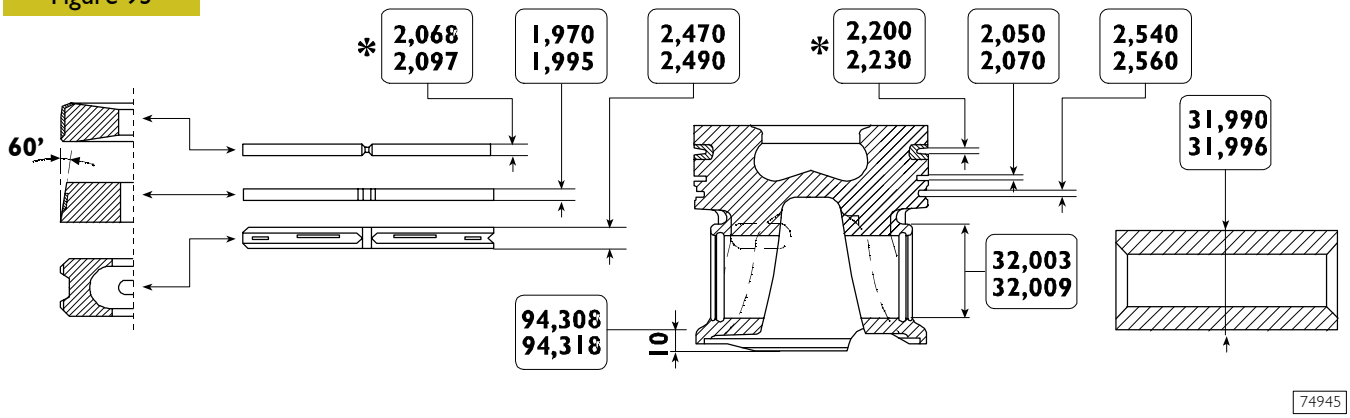

MAIN DATA FOR MONDIAL PISTON, PINS AND PISTON RINGS - ENGINES 8140.43B/R/S

*Measured on the diameter of 91.4 mm.

Figure 94

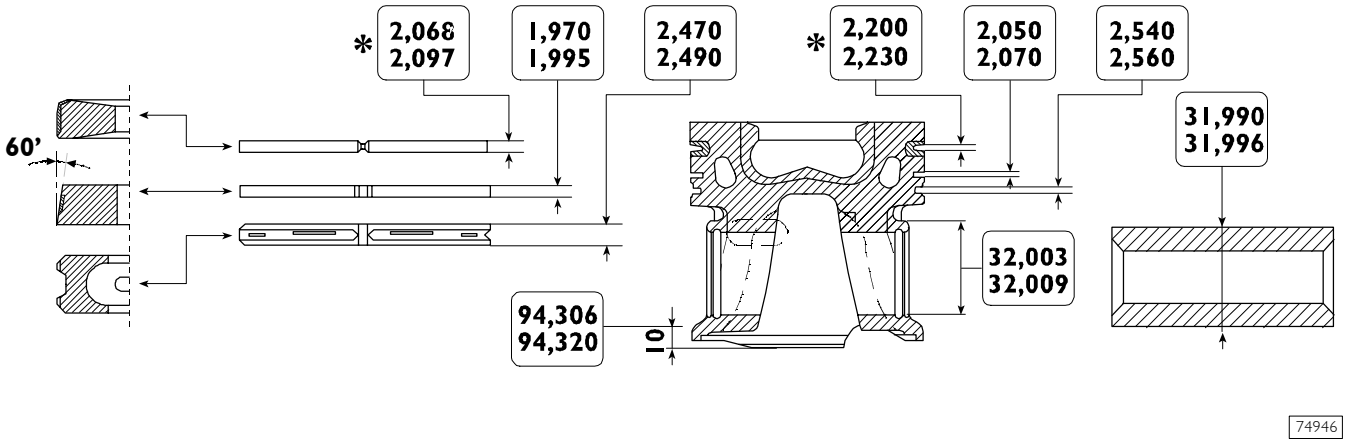

MAIN DATA FOR KS PISTON, PINS AND PISTON RINGS - ENGINES 8140.43N

*Measured on the diameter of 91.4 mm.

540840 Pistons
Measuring the pistons diameter

Figure 95

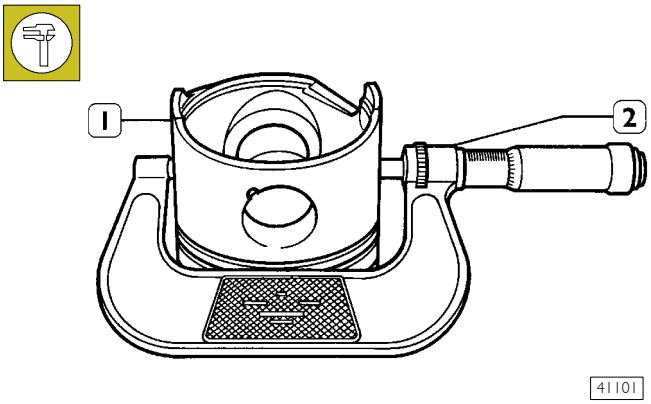

Measure piston diameter (1), with a micrometer (2), to determine assembly clearance; measured diameter value must be equal to that indicated in the table of page 43.

Spare pistons have standard diameter with 0.4 mm oversize and include rings, pin and safety rings.

Figure 96

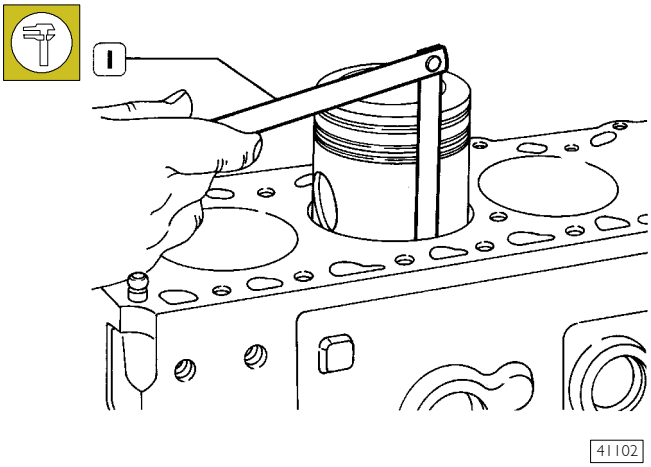

The clearance between piston and cylinder liner can be also checked by means of a thickness gauge (1), as shown in this figure.

540841 Piston gudgeon pins

Figure 97

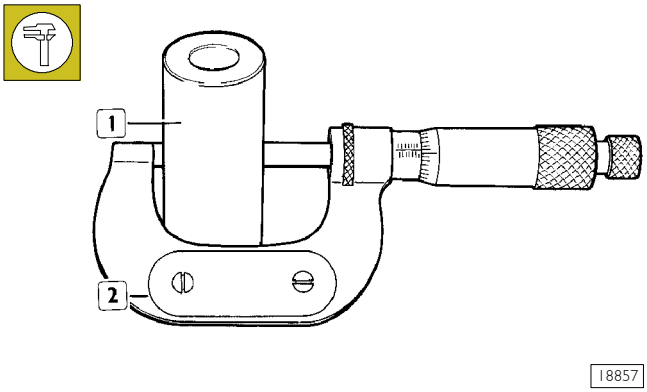

Measurements of piston gudgeon pin diameter (1) with a micrometer (2).

Conditions for correct pin-piston coupling

Figure 98

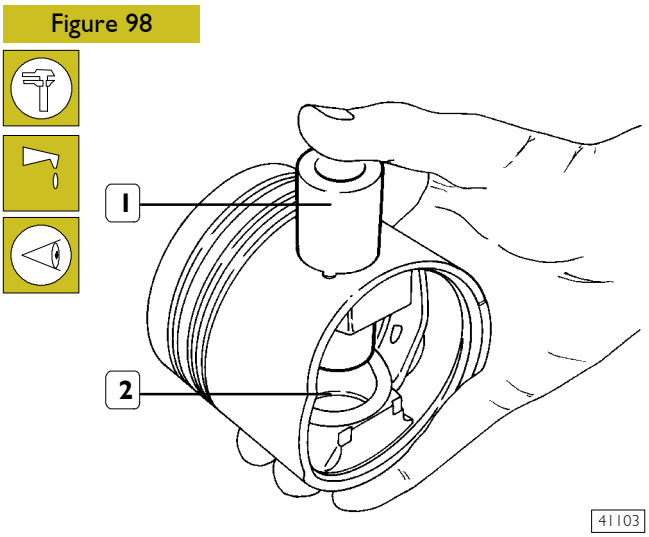

Lubricate pin (1) and the relevant seat on piston (2) hubs with engine oil; piston must allow to be inserted with a slight finger pressure and it should not come out by gravity.

540842 Piston rings

Figure 99

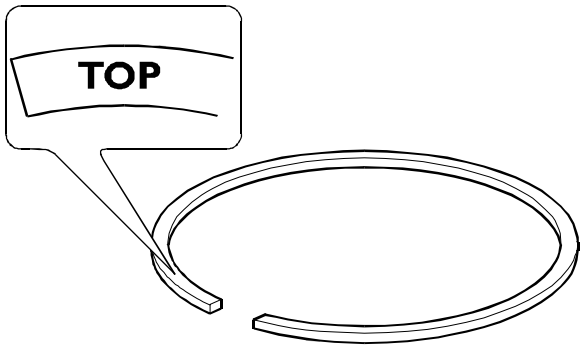

74947

The piston rings (1st slot) and oil scraper rings (2nd slot) have TOP etched on them: this should be facing upwards when they are fitted on the piston.

Figure 100

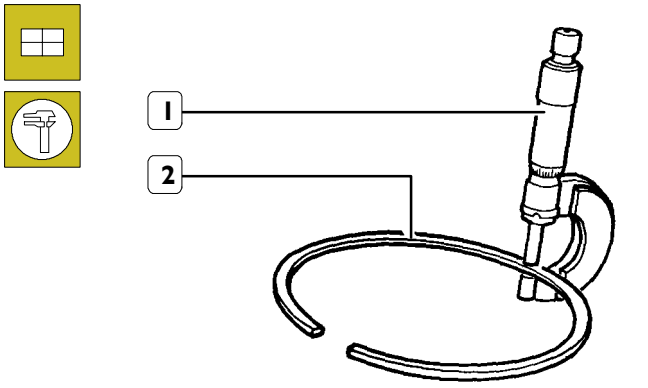

16552

Check piston ring (2) thickness with a micrometer (1).

Figure 101

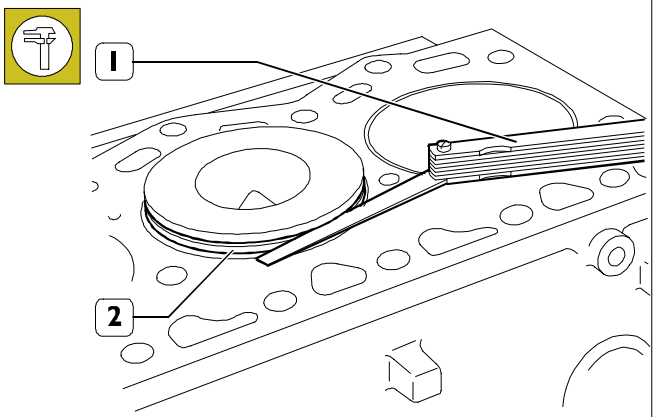

74948

Checking the clearance between the V-ring (2) 1st slot and the associated slot on the piston with a feeler gauge (1) as follows. Insert the piston into the cylinder barrel so that the ring (2) comes approximately half way out of it.

Figure 102

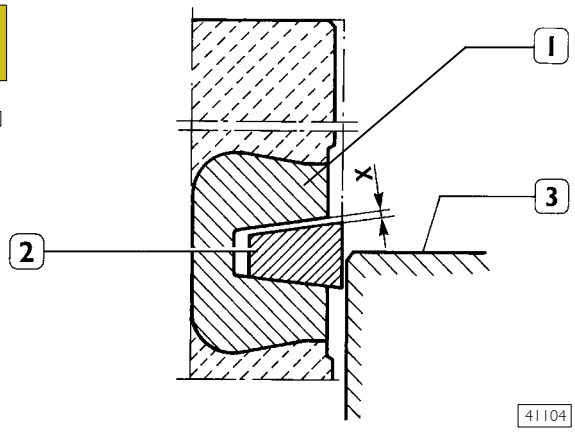

41104

DIAGRAM FOR MEASURING THE CLEARANCE BETWEEN THE FIRST PISTON SLOT AND THE PISTON RING

1. 1st piston slot - 2. Piston ring - 3. Cylinder barrel

Using a feeler gauge (1, Figure 101) check the clearance (X) between the ring (2) and the slot (1); this clearance must be of the prescribed value.

Figure 103

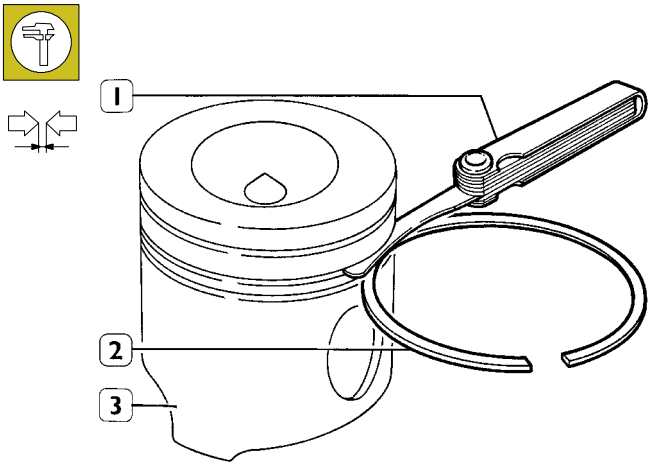

41105

Check the clearance between the seal rings (2) of the 2nd and 3rd slot and the associated seats on the piston (3) with the feeler gauge (1).

Figure 104

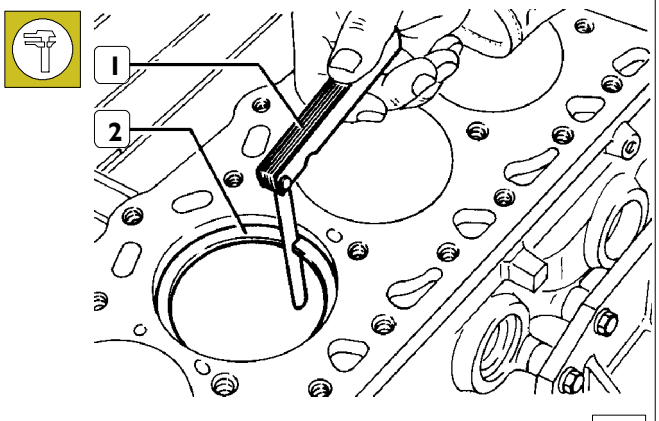

Checking, with a thickness gauge (1), the opening between piston ring ends (2), introduced in cylinder liner.

540830 Connecting rods

Figure 105

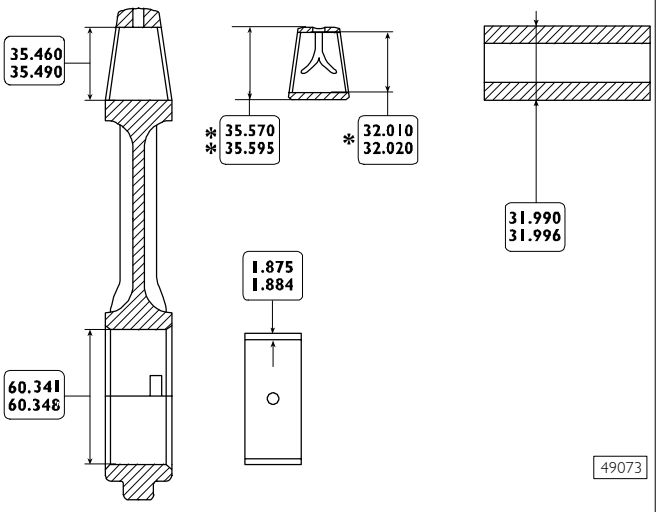

MAIN DATA FOR CONNECTING ROD, BUSHING, PISTON PIN AND HALF BEARINGS

* Internal diameter to be obtained after driving into the connecting rod small end and regrinding with reamer.

** Cannot be measured in free state.

• Ø of the connected rod supplied as a spare

Connecting rods are marked as follows:

- body and cap with a number identifying the coupling;
- Connecting rod cap with a letter: O or X identifying the diameter class for connecting rod head mounted in production;
- connecting rod cap with a number identifying the load class for the connecting rod mounted in production;
- it could also be marked with the corresponding cylinder number.

In case of replacement, the new connecting rod shall be marked with the same numbers and letters as the old one.

Numbering shall be performed on the opposite side to half bearing retaining slots.

Spare connecting rods are supplied with 60.341 ÷ 60.348 head diameter marked with letter O and load class identified with number 33.

Material removal is not admitted.

540834 Bushes

Make sure that bushing, in connecting rod small end, is not loose and free from any scoring and traces of seizure, otherwise replace it.

Dismantling and refitting are performed with a suitable punch.

When driving, check accurately that oil flow holes, on bushing and connecting rod small end, coincide.

With reamer reface bushing so as to obtain 32.010 ÷ 32.020 mm diameter.

Checking connecting rod for distortion

Figure 106

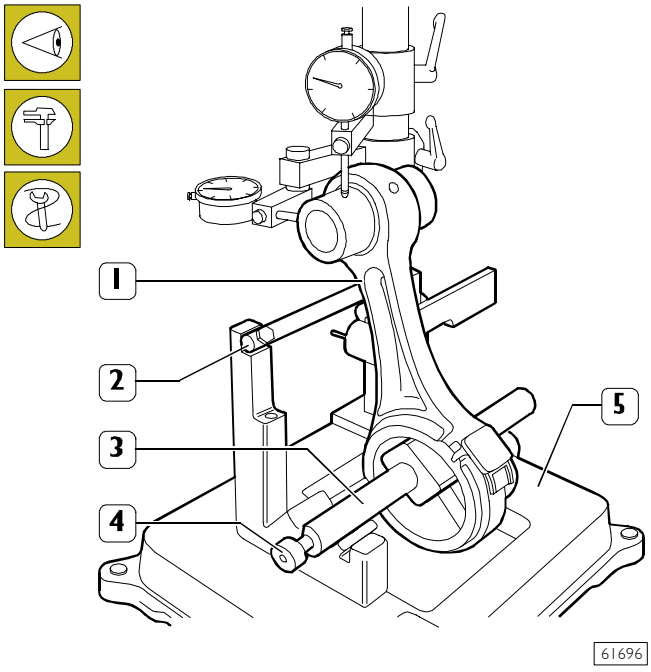

Use tool 99395363 (5) to check connecting rod (1) axes parallelism and proceed as follows:

- fit connecting rod (1) on tool 99395363 (5) chuck and lock it by screw (4);
- set chuck (3) on V-prisms and rest connecting rod (1) on stop bar (2).

Checking torsion

Figure 107

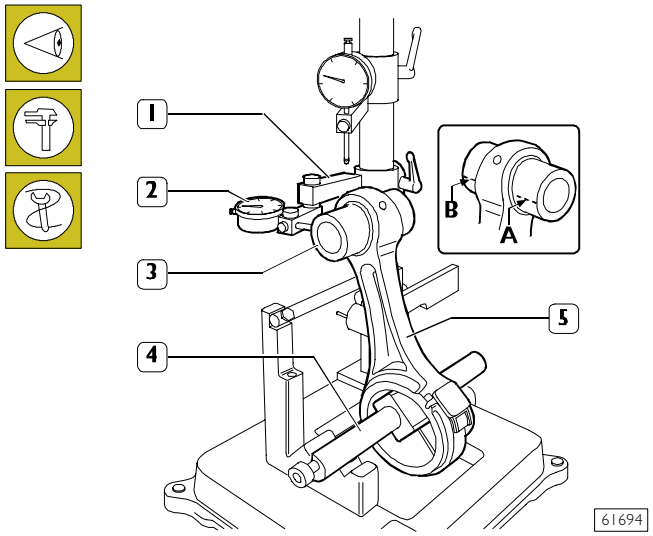

Check connecting rod (5) torsion by comparing the two piston pin (3) points (**A** and **B**) on connecting rod axis horizontal surface.
Position dial gauge (2) support (1) so that dial gauge is precharged by approx. 0.5 mm on piston pin (3) on point A and set dial gauge (2) to zero. Move chuck (4) with connecting rod (5) and compare the difference, if any, on the opposite side (B) of piston pin (3): the difference between A and B shall not exceed 0.08 mm.

Checking bending

Figure 108

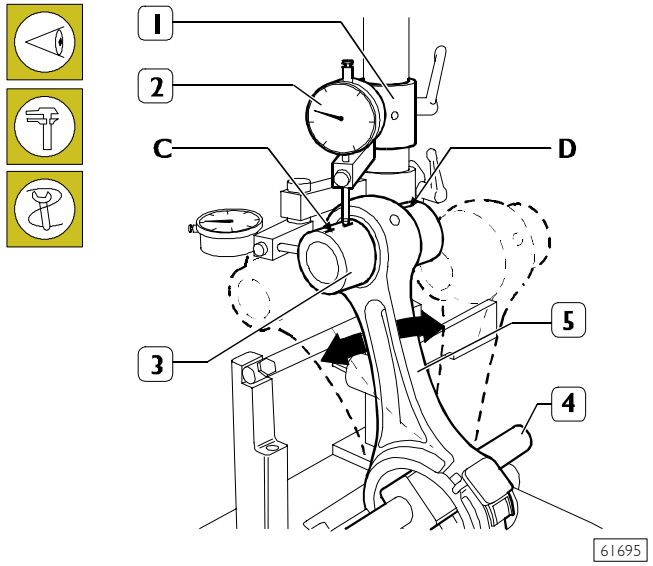

Check connecting rod (5) bending by comparing two piston pin (3) points C and D on vertical connecting rod axis. Set dial gauge (2) vertical support (1) on piston pin (3) point C.
Move connecting rod forward and backward searching the highest piston pin position and set dial gauge (2) to zero when finding this condition.
Move chuck and connecting rod (5) and repeat the above operation on piston pin (3) point D. The difference between points C and D shall not exceed 0.08 mm.

Assembling connecting rod - piston assembly

Coupling connecting rod - pistons

Figure 109

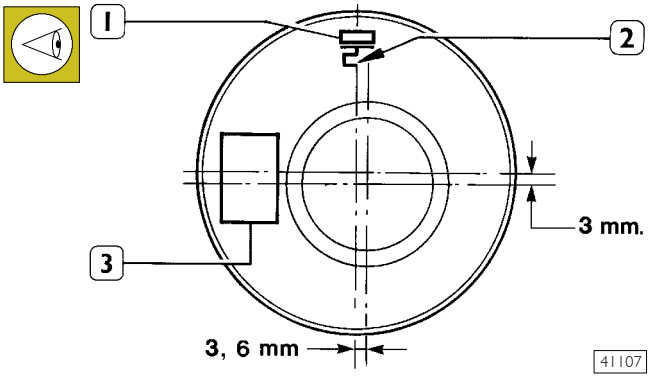

Etched on the top of the piston are, at reference (1): the type of engine, selection of the class and supplier*; at reference (2): the direction for fitting the piston in the cylinder barrel; (3), mark on testing adhesion of 1st slot insert; at reference (4): adhesive label with the numerical code for optical reading of the type of engine and class selection.

Figure 110

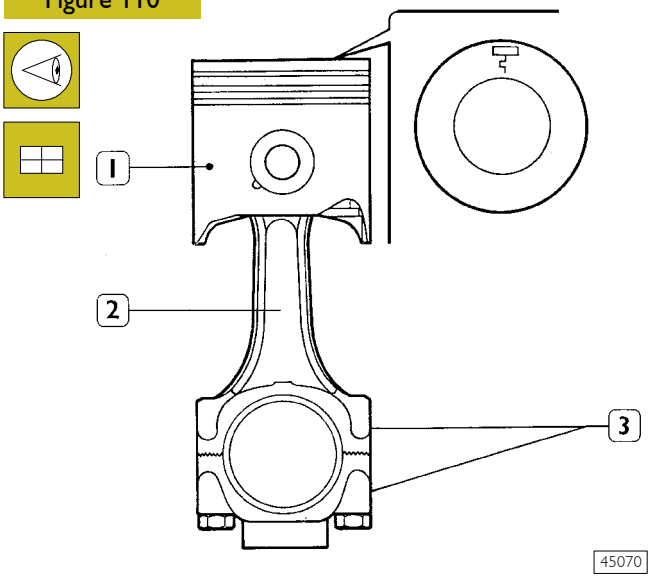

Fit piston (1) to connecting rod (2) so as piston assembly reference and connecting rod numbers (3) can be seen as shown in the figure.

Figure 111

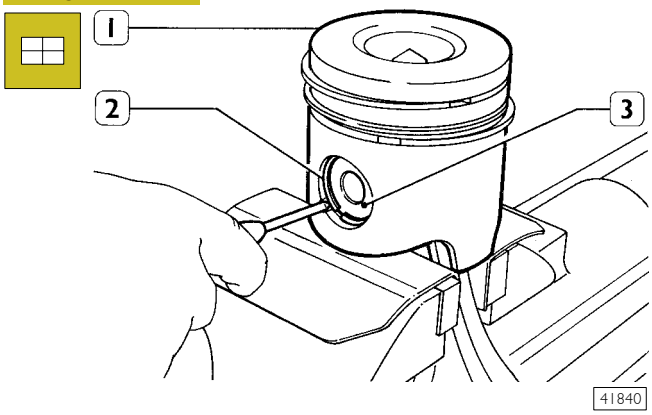

Set piston (1) on connecting rod, fit pin (3) and secure it with piston rings (2).

Checking for connecting rod - piston distortion

Figure 112

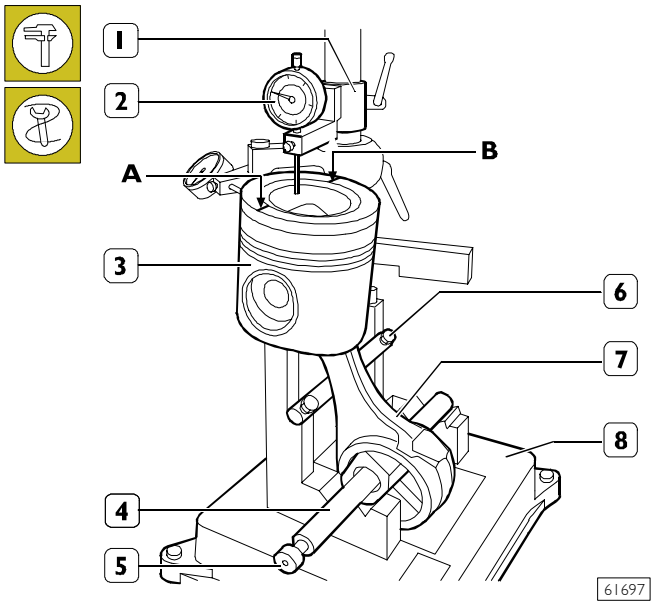

After assembling connecting rod-piston assembly, use tool 99395363 (8) to check squaring as follows:

- ❑ fit connecting rod (7) and piston (3) on tool 99395363 (8) chuck (4) and lock it by screw (5);
- ❑ set connecting rod (7) on bar (6);
- ❑ position dial gauge (2) support (1) so that dial gauge is set on piston point A, with 0.5 mm preload and set dial gauge (2) to zero;
- ❑ move chuck (4) so that dial gauge (2) is set on piston (3) point B and check for any deviation.

Fitting piston rings

Figure 113

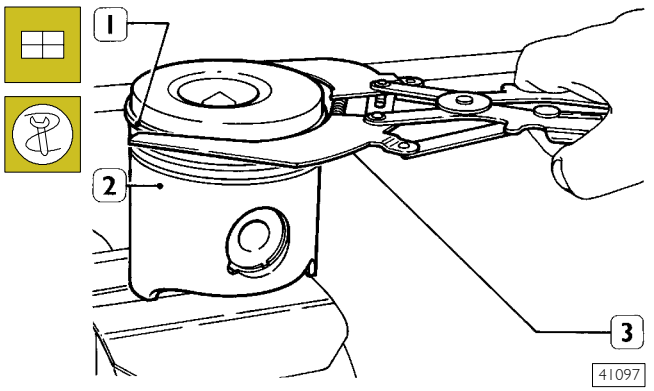

Fit piston rings (1) on piston (2), using pliers 99360183 (3).

The piston rings for the 1st and 2nd slot must be fitted with the word "TOP" facing upwards.

Fitting connecting rod - piston assemblies in cylinder barrels

Figure 114

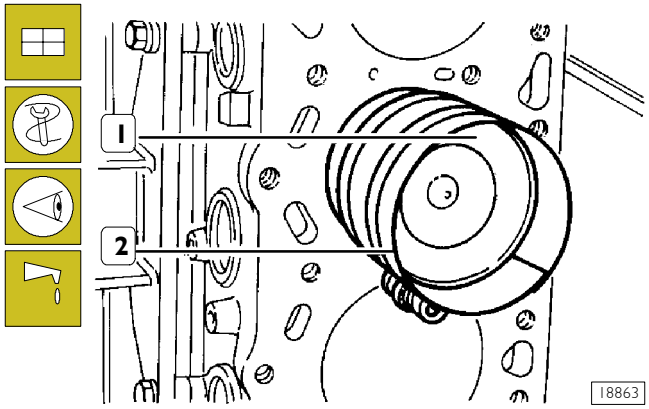

Lubricated pistons correctly, including piston rings and cylinder liner interiors.
By means of ring clamp 99360605 (2) fit connecting rod-piston assemblies (1) into cylinder liners, checking that:

- ❑ the number of each connecting rod corresponds to cap fitting number.

Figure 115

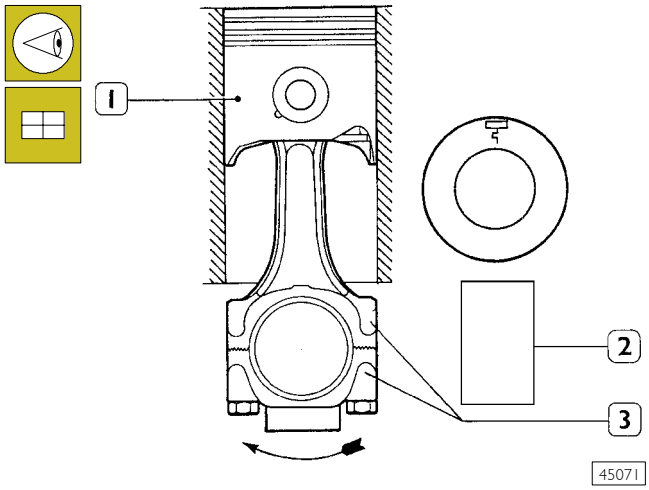

DIAGRAM FOR CONNECTING ROD-PISTON ASSEMBLY FITTING INTO CYLINDER
1. Piston - 2. Accessory components group - 3. Number printing area - A. Indirect injection engine piston (prechamber) - *Piston crown cavity - B. Direct injection engine piston

- ❑ piston ring openings are 120° offset one another;
- ❑ all pistons are of same weight;
- ❑ the symbol printed on the piston crown is directed towards flywheel, or the recess on the piston skirt corresponds to the position of oil spray nozzles.

Having not found any need to replace main bearings, it is required to refit them in the same order and position they were when dismantled.

540831 Measuring connecting rod assembly clearance

Figure 116

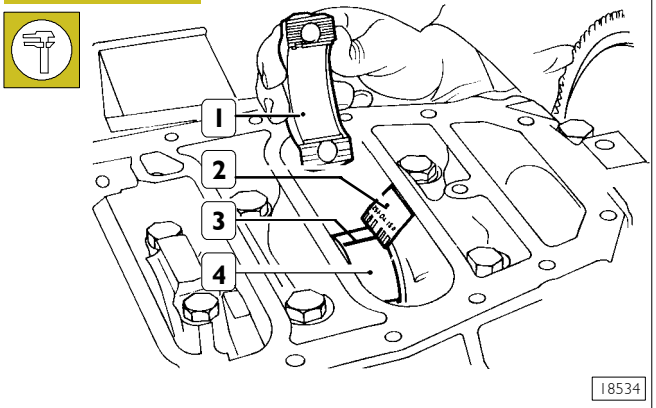

To measure clearance carry out the following operations:

- ❑ clean carefully the parts and remove any oil traces;
- ❑ place a cut down size of calibrated wire (3) on crankshaft pins (4).

Figure 117

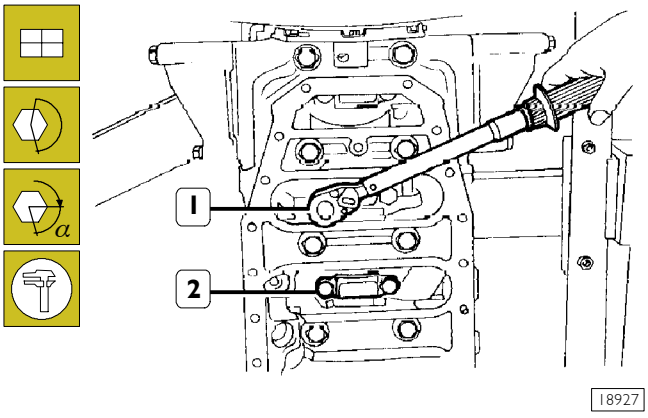

- ❑ Fit connecting rod caps (2) with relevant half bearings.

The fitting of connecting rod cap of cylinder n. 4 is practicable only when piston is at T.D.C.

- ❑ Tighten screws, previously lubricated with UTDM oil, with torque wrench (1) to torque of 50 Nm + angle of 63° ± 3°;

For angular closing use tool 99395216.

- ❑ Remove cap (2) and determine existing clearance, by comparing calibrated wire width (3, Figure 116) with graduation of scale indicated on envelope (2, Figure 116) containing such a wire. If a clearance other than the one specified is found, replace half bearings and repeat check. Once prescribed clearance is obtained, lubricate connecting rod half bearings and fit them definitively by tightening connecting rod caps fastening screws as described.

Connecting rod caps fastening screws must be replaced with new ones, when fitted definitively.

Check manually that connecting rods slide axially on crankshaft pins.

Checking piston protrusion

Figure 118

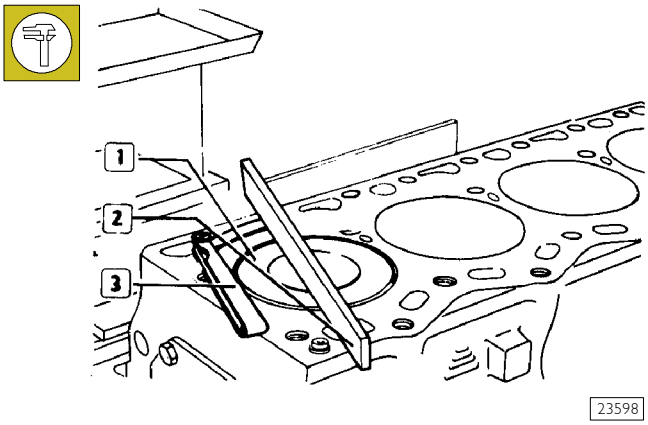

Once connecting rods-pistons assemblies fitting is completed, check for piston (1) protrusion at T.D.C. with respect to upper crankcase surface, with thickness gauge (3) and calibrated rule (2).
In connection with measured protrusion, choose cylinder head replacement gasket, according to the following table.

Piston average protrusion	Cylinder head gasket thickness*	
	Free	Fitted
0.61 ÷ 0.80	1.48 ÷ 1.62	~ 1.40
0.40 ÷ 0.60	1.23 ÷ 1.35	~ 1.20

* Thickness of cylinder head gasket is calculated on the basis of maximum piston protrusion from the crankcase measured on all four pistons.

The difference between minimum and maximum protrusion of the four pistons should be equal to or less than 0.200 mm.

The cylinder head gasket included in the engine overhauling spare parts kit is supplied in its maximum size. Obviously, it can also be obtained in other sizes, as required.

540850 Flywheel adjustment

Figure 119

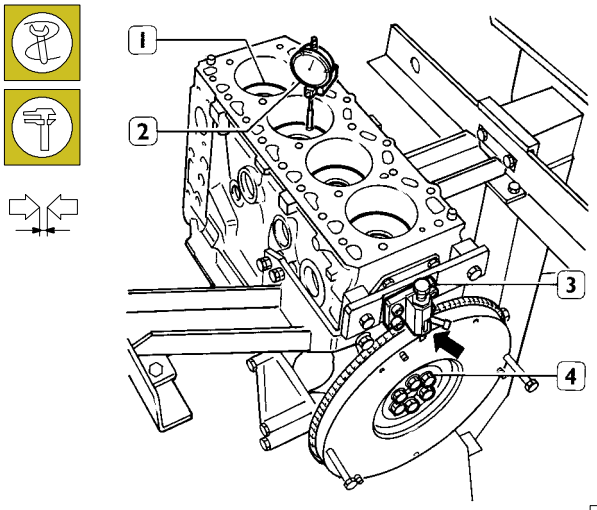

Make sure flywheel fastening screws (4) are slack.
Apply gauge 99395214 (3) to engine crankcase.
Rotate crankshaft so as to set piston (1) to T.D.C.
Rotate crankshaft in direction opposite to that of rotation of ~ 90° (89° 25').
With the special dial gauge (2), determine exact balance point of pistons of cylinders 1 and 2, operating as follows:
set to zero dial gauge (2) on piston of cylinder n.1;
move dial gauge so set to zero, on piston of cylinder n. 2 and record deviation.
If no deviation is found, it means that pistons of cylinders 1 and 2 are perfectly balanced. In the opposite case, share out halved value of measured deviation, by rotating crankshaft conveniently.

Example:
- If deviation is in default, i.e.: 0.2 mm before zero setting point, it is required to rotate crankshaft in opposite direction to that of rotation, so that deviation is halved, that is, 0.1 mm.
- If deviation is in excess, i.e. 0.2 mm after zero setting point, it is required to rotate crankshaft in its direction of rotation of ~ 1/4 of turn, to recover crank mechanism clearances, then invert rotation direction until deviation is halved, that is, 0.1 mm.

Once balance of pistons is so determined, without moving crankshaft, direct flywheel in such a way that pin of tool 99395214 (3) is inserted into flywheel milling (→).
Slightly tighten screws (4).
Remove tool 99395214.
Then tighten flywheel fastening screws (4) according to procedures described in the following figure.

Figure 120

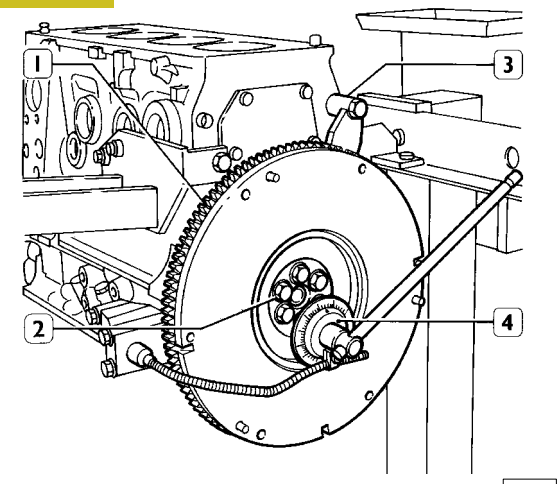

Apply tool 99360306 (3).
Tighten flywheel (1) fastening screws (2) in two stages:

- ❑ 1st stage: tightening with torque wrench to torque 30 ± 3 Nm;
- ❑ 2nd stage: closing with 90° ± 2° angle.

The angle closing is performed with tool 99395216 (4).

Figure 121

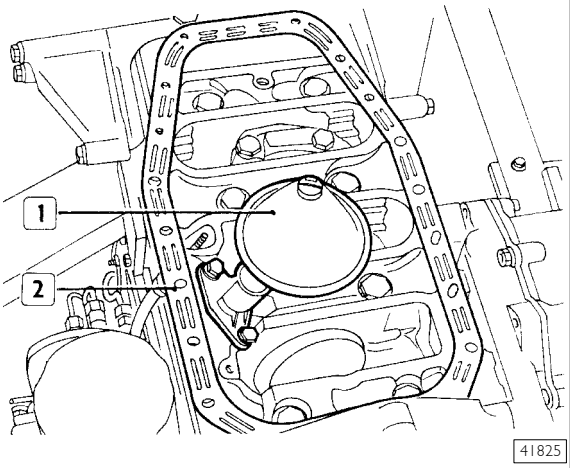

Rotate the engine, fit oil suction strainer (1), place sealing ring (2) and fit oil sump.

560610 CYLINDER HEADS
541210 Dismantling camshaft

Figure 122

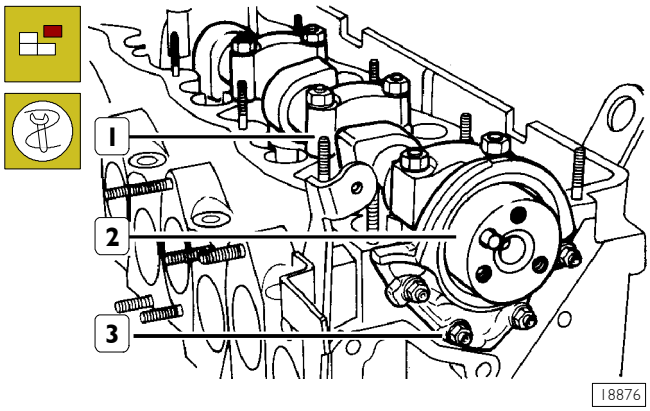

Set tool 99361004 on adjustable support 99365014 and secure cylinder head on said support.
Remove cover (3), unscrew camshaft (2) caps (1) fastening nuts, remove caps and shaft.

To avoid bending the camshaft too much, loosen the nuts fixing the caps (1) gradually and evenly.

Checks

The surfaces of the shaft support pins and of the cams must be ultra-smooth. If they show signs of seizure and scoring, replace the shaft.

Figure 124

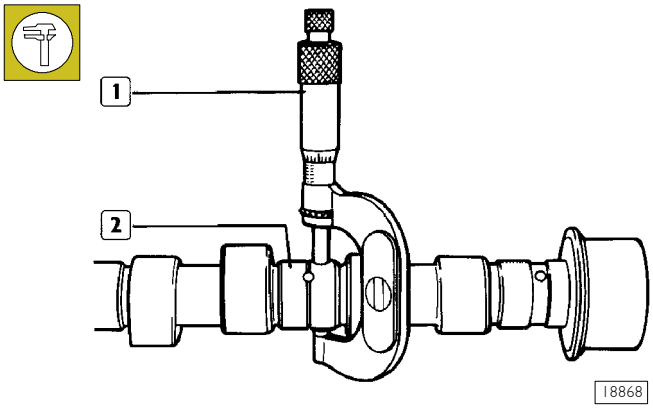

Measure camshaft pins (2) diameter with a micrometer (1), and with an inside micrometer gauge the diameter of the hole defined by the union of caps to the relevant supports on cylinder head, that should be 0.035 ÷ 0.081 mm. If not so, replace concerned parts.

If it is necessary to replace the basin plugs on the ends of the camshaft, use a suitable punch for removal - refitting.

Before mounting the plugs, apply sealant on their sealing surfaces.

Figure 123

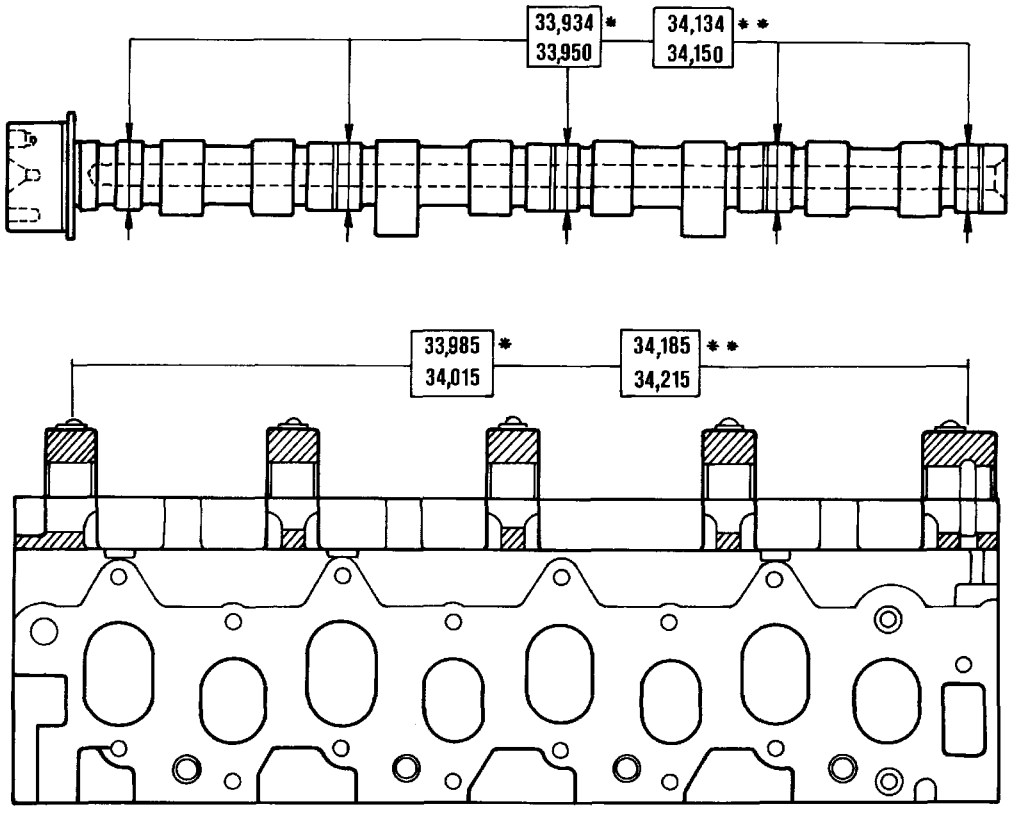

MAIN DATA ON CAMSHAFT, RELEVANT SUPPORTS AND CAPS ON CYLINDER HEAD
* Normal diameter - ** 0.2 mm oversize diameter

541211 Checking cam lift and journal alignment

Set shaft on centres and check, with a centesimal dial gauge placed on central support, that alignment error is no greater than 0.04 mm, otherwise replace shaft. Also check cams lift: it should be 10.5 mm for those of outlet and 9.5 mm for those of inlet; if different values are found replace the shaft.

541224 VALVE TAPPET

Figure 125

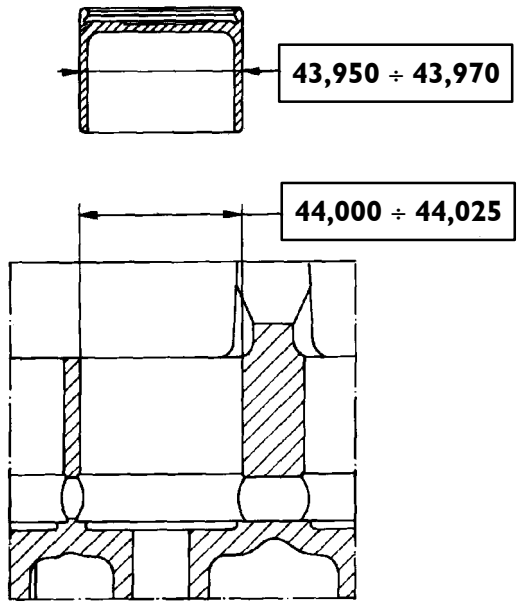

25227

MAIN DATA ON VALVE TAPPET AND RELEVANT SEAT ON CYLINDER HEAD

Figure 126

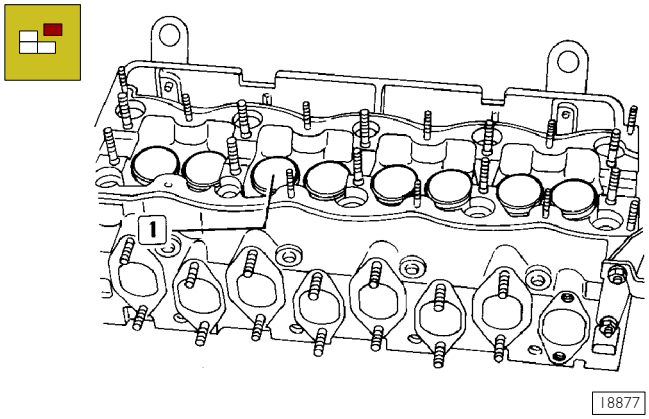

18877

Extract valve tappet (1) complete with adjusting caps, placing them in a container according to the order they were when removed.
Lateral surface of valve tappet must be very smooth and dent free.
Small dents can be eliminated with a very fine abrasive stone.

Figure 127

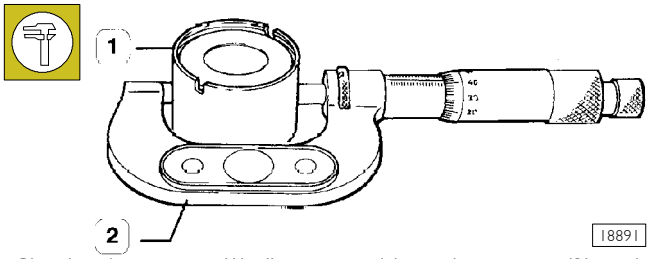

18891

Check valve tappet (1) diameter, with a micrometer (2) and with an inside micrometer gauge the diameter of relevant seats on cylinder head; they must be equal to those indicated in Figure 125. The normal fitting clearance between the maximum diameter of valve tappet and that of seats is 0.030 ÷ 0.075 mm.
The replacement of valve tappet, because of an excessive clearance in the seats, requires to fit oversized valve tappet after boring the seats by means of a suitable reamer.

540662 Dismantling valves

Figure 128

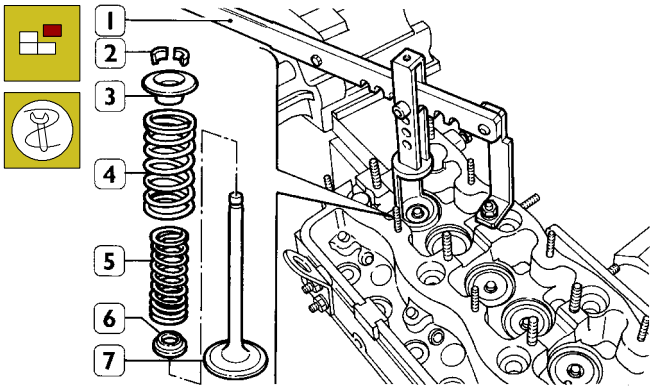

41113

Valve dismantling is performed with tool 99360268 (1) by exerting a pressure on cap (3) so that, pressing springs (4 and 5) it is allowed to remove lock cones (2). Then remove: upper cap (3), springs (4 and 5) and lower cap (6).
Repeat operation on all valves.
Overturn cylinder head and remove valves (7).

Figure 129

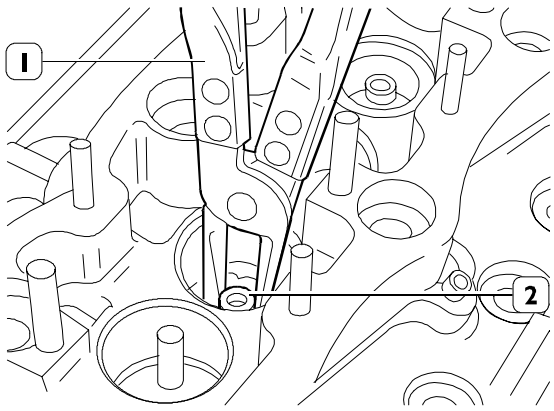

50674

Using suitable pliers (1), remove the seal rings (2) from the valve guides.

Checking cylinder head seal

Figure 130

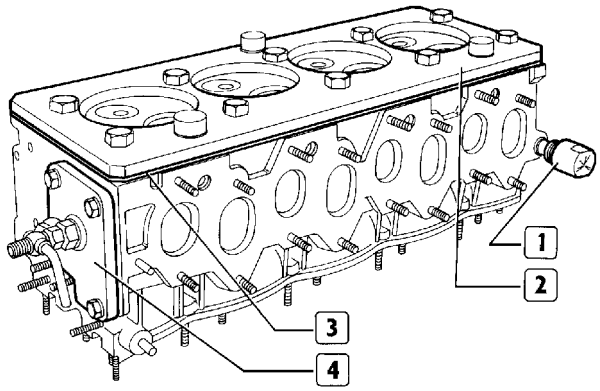

18542

Check for hydraulic leak by means of suitable equipment (1-2-3-4).
Supply water, through pump, heated at ~ 90°C and at 2 ÷ 3 bar pressure.
Should plug leaks be found, replace them using a proper beater for removal/refitting.

Before mounting the plugs, apply water-reacting sealant on their sealing surfaces.

If there is any leakage from the cylinder head, it must be replaced.

Checking cylinder head mating surface

Figure 131

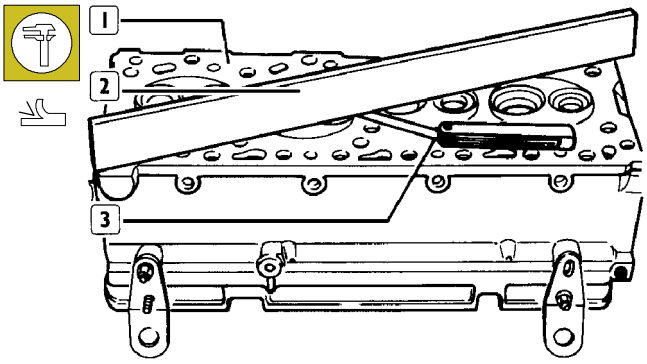

18879

The check of mating surface of the head (1) to cylinder group is performed by means of a rule (2) and a thickness gauge (3).
If a deformation is found, measure cylinder head thickness, whose rated value is 150 ± 0.1 mm.
When checking, if the amount of material to be removed for flattening cylinder head is greater than 0.4 mm, replace cylinder head.

540662 VALVES

Figure 132

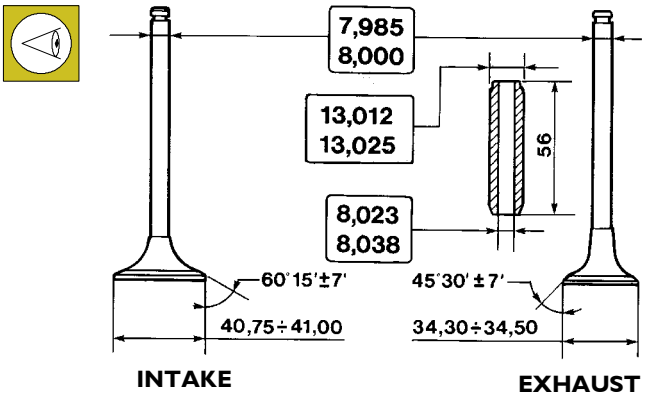

41115

MAIN DATA ON INTAKE AND EXHAUST VALES AND VALVE GUIDES

Removing deposits, refacing and checking valves

Figure 133

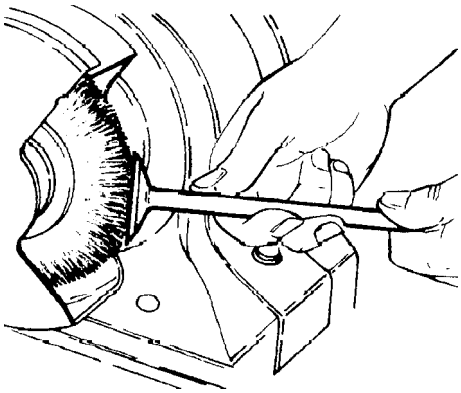

18625

Remove any carbonic deposits on valves, using the special metal brush.
Check that valves do not show any trace of seizure, crack or burning. Regrind seats on valves, if necessary, with grinder 99301014, removing an amount of material, as little as possible.

Figure 134

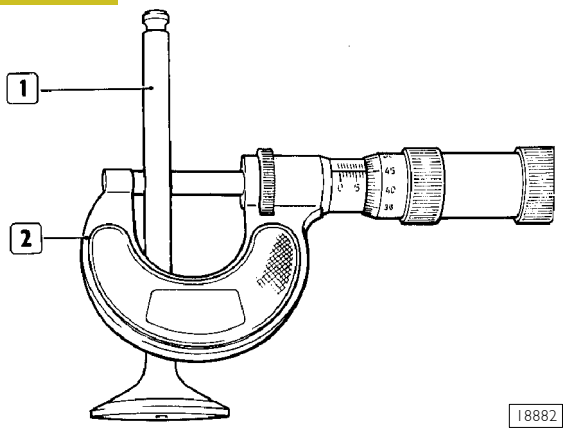

18882

With a micrometer (2) measure valve stem (1): it must be 7.985 ÷ 8.00 mm.

Checking clearance between valve stem and valve guide and centring valves

Figure 135

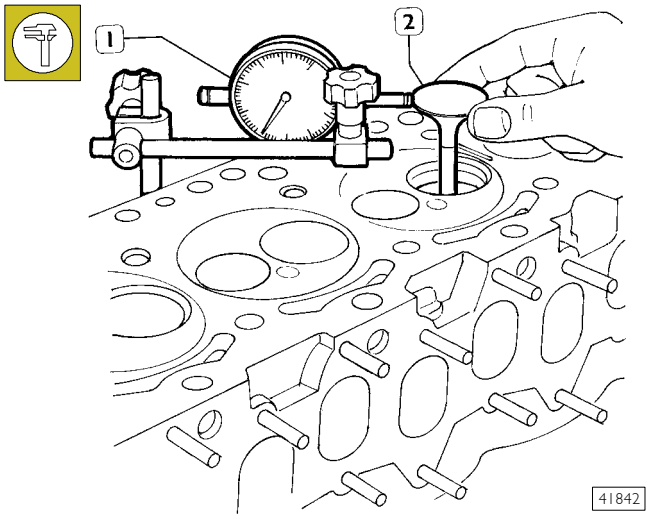

These checks are carried out with a magnetic-base dial gauge (1) set as shown. Assembly clearance is 0.023 ÷ 0.053 mm. On emptying valve (2) check that centring error is not greater than 0.03 mm.

540667 VALVE GUIDES
Replacing valve guides

Figure 136

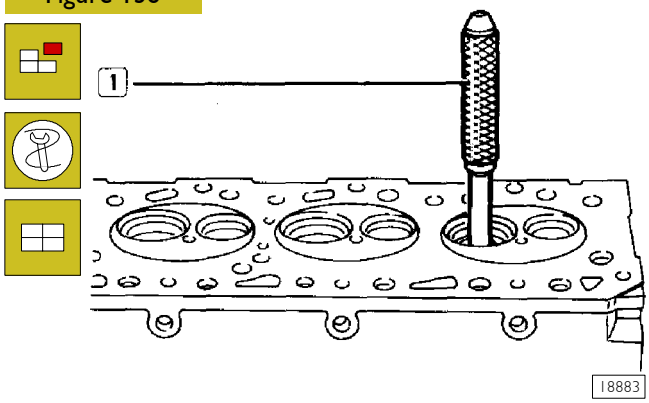

Remove valve guide with punch 99360288 (1).

Figure 137

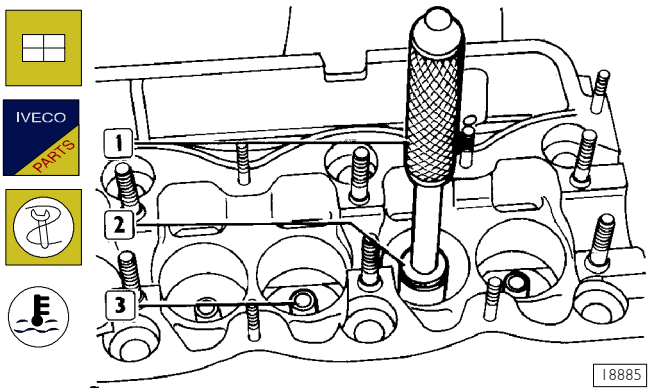

Heat cylinder head to 80° ÷ 100°C and with punch 99360288 (1) equipped with part 99360291 (2) fit new valve guide (3) previously cooled in liquid nitrogen.

Figure 138

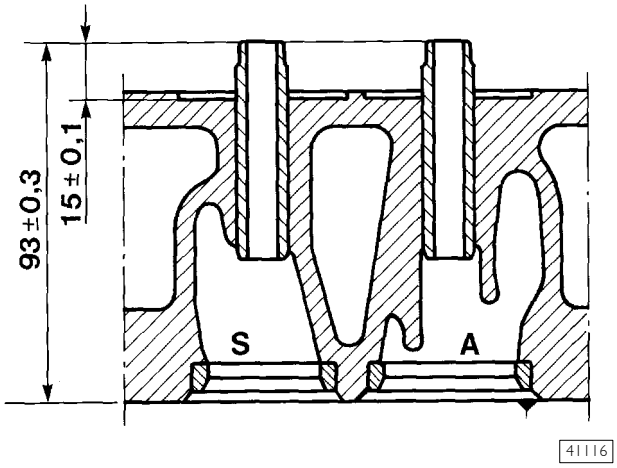

Valve guide fitting.

Reaming valve guides

Figure 139

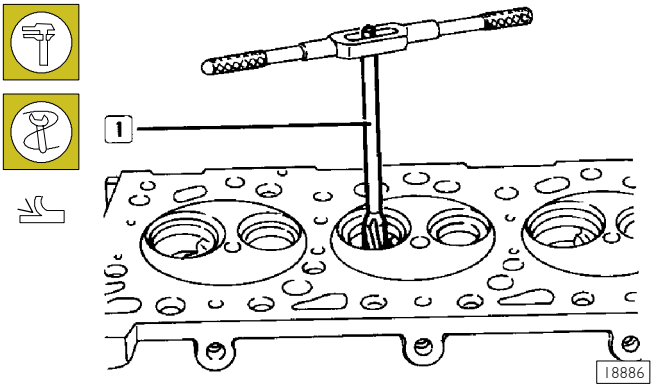

Once valve guides are driven, sleek them with smoothing tool 99390310 (1).

540661 VALVE SEATS
Regrinding and replacing valve seats

Figure 140

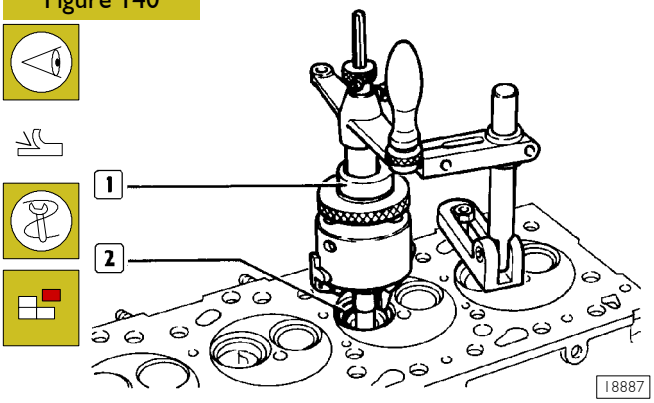

Check valve seats (2). If any slight scoring or burning is found regrind them with tool HUNGER 99360419 (1) according to inclination values specified in Figure 141.
If it is required to replace them, using the same tool and taking care not to damage the cylinder head, remove as much material as possible from valve seats, until it is possible to extract them from the cylinder head with a punch.

Figure 141

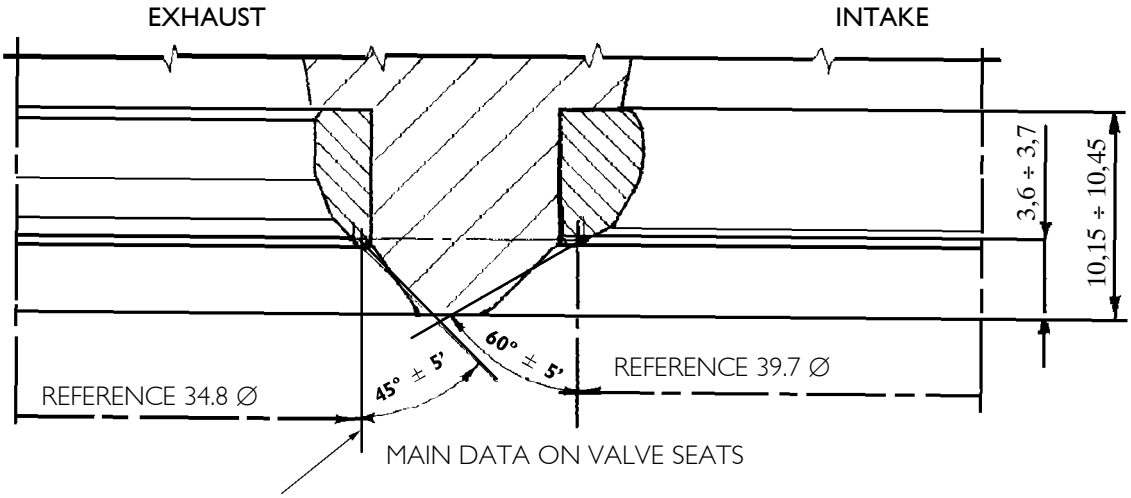

Figure 142

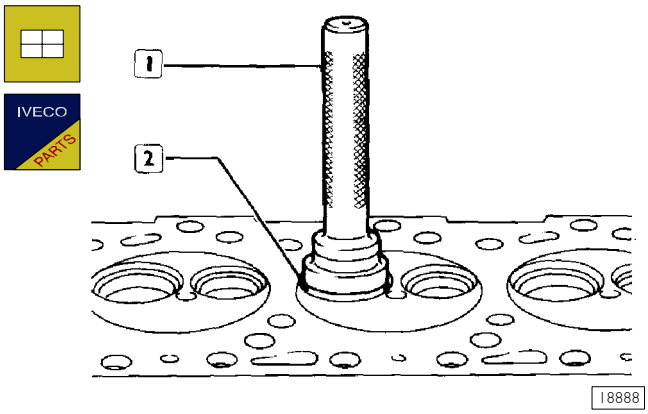

Heat cylinder head to 80° ÷ 100°C and, by means of a suitable punch (1), fit in it the new valve seats (2), previously cooled in liquid nitrogen.
With tool HUNGER 99360419, regrind valve seats according to inclination values specified in Figure 141.

Figure 143

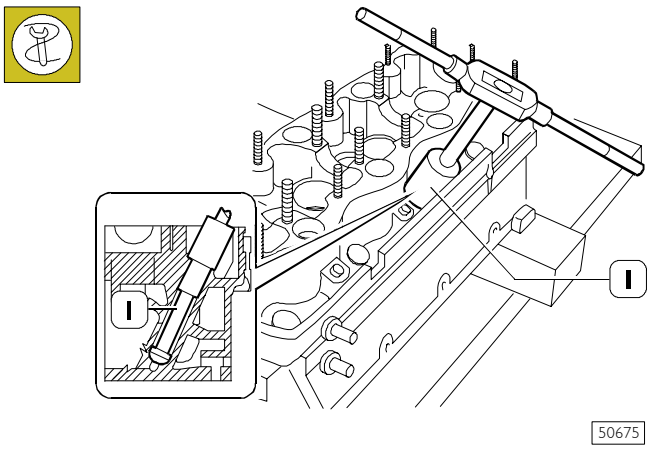

Clean injector seats from any deposit, using cutter 99394038 (1).

Figure 144

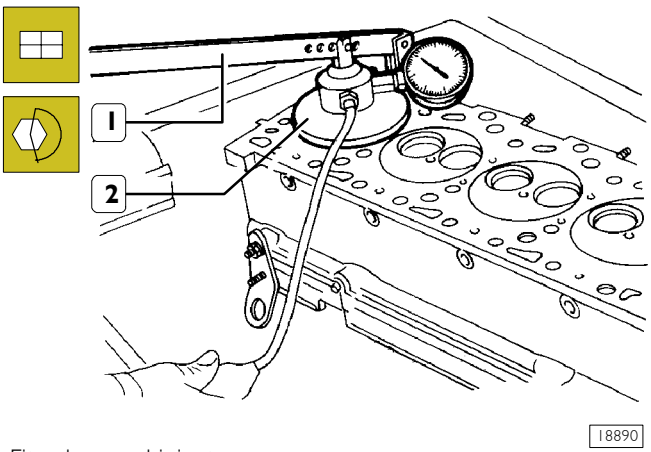

Fit valves and injectors.
Check valve sealing and respective seats with tools (1-2).

Figure 145

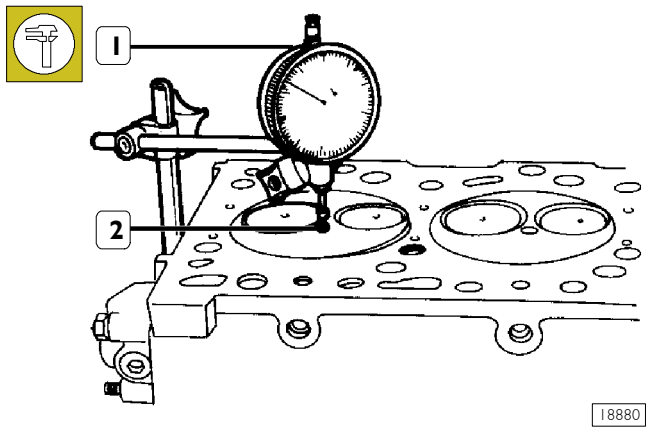

With dial gauge (1) check that, from cylinder head surface, the hollow of valves and injector (2) protrusion have the prescribed value.

540665 VALVE SPRINGS

Figure 146

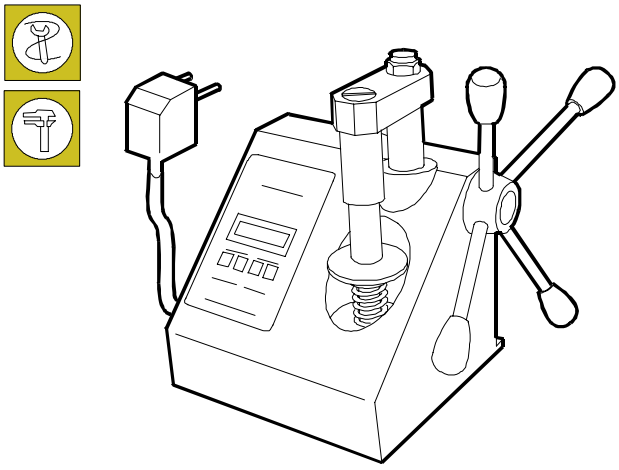

62386

Prior to reassembly, test valve spring flexibility by means of tool 99305047. Compare load and elastic deformation data with those applying to new springs shown in the following figure.

Figure 147

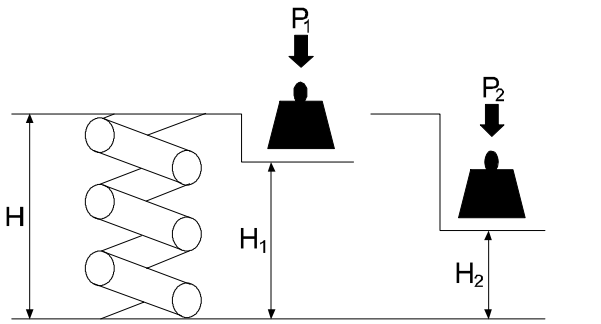

50676

MAIN DATA FOR ADJUSTING CONTROL VALVES SPRING EXHAUST

EXTERNAL SPRING		INTERNAL SPRING	
Height	Under a load of		Height
mm	kg		mm
H 52	Free		H 45.5
H_1 38.5	P 43.8 ± 2.5	P_1 16.4 ± 1	H_1 33.5
H_2 28.5	P_1 77.4 ± 4	P_1 30 ± 1.5	H_2 23.5

FITTING CYLINDER HEADS

Figure 148

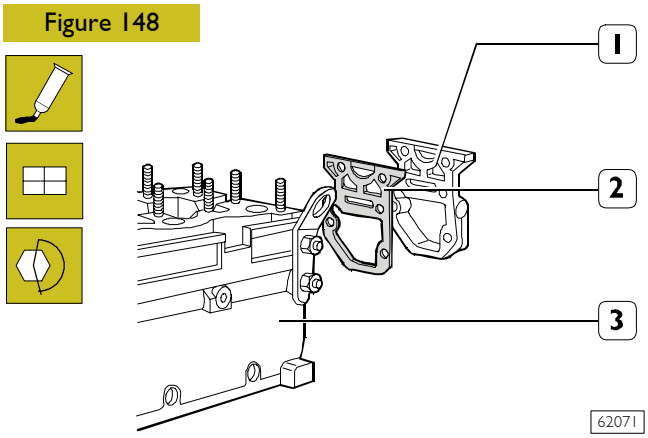

62071

Should rear cover (1) be removed from cylinder head (3), fit a new gasket (2) at refitting and tighten fixing nuts to the specified torque.

Fitting valves

Figure 149

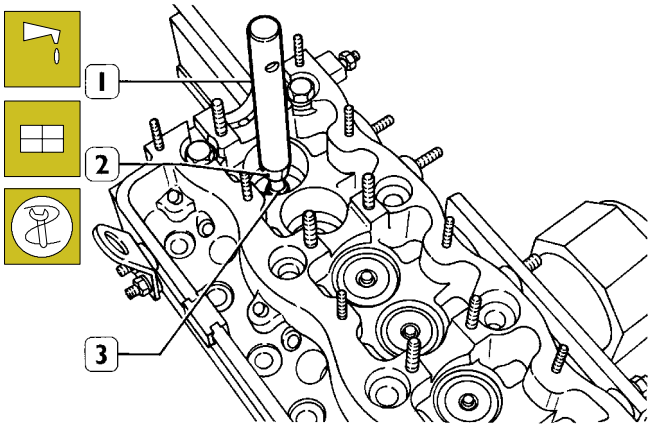

41122

Lubricate stem of valves and insert them in the relevant valve guides.
With tool 99360292 (1) fit sealing ring (2) on intake and exhaust valve guides (3).

Figure 150

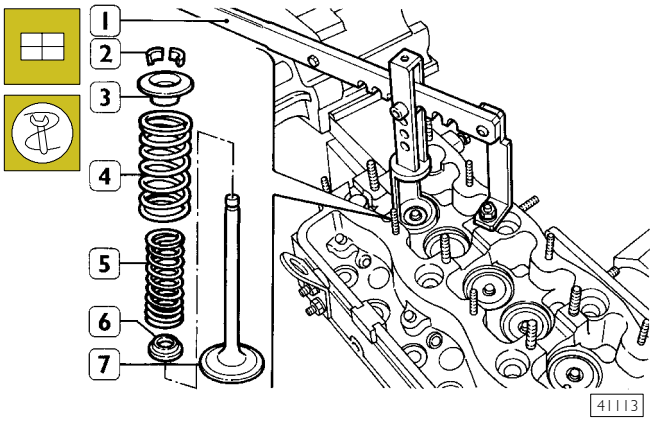

41113

Place on cylinder heads: lower cap (6), springs (4 and 5) and upper cap (3); with tool 99360268 (1) press springs (4 and 5) and secure parts to the valve by means of lock cones (2).

Fitting tappets

Figure 151

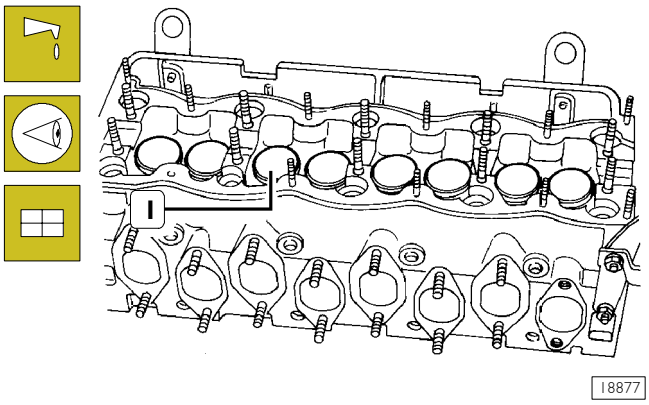

Lubricate tappet seats and fit tappets (1) complete with adjusting cap, in the same sequence they were before dismantling.

Fitting camshaft

Figure 152

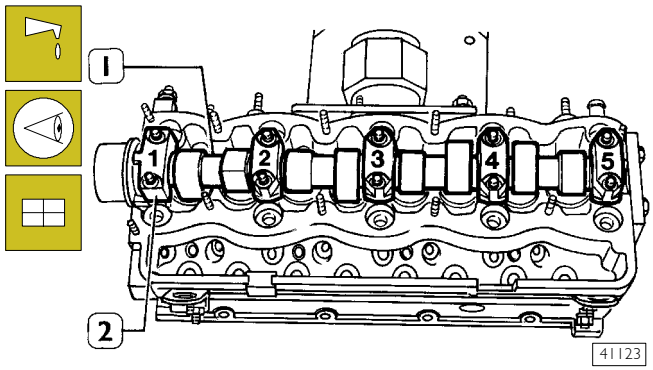

Lubricate supports on camshaft (1) cylinder heads and fit camshaft.
Fit caps (2) on relevant supports, making sure that the numbers indicated on caps are turned to the same side as those indicated on cylinder heads.

Figure 153

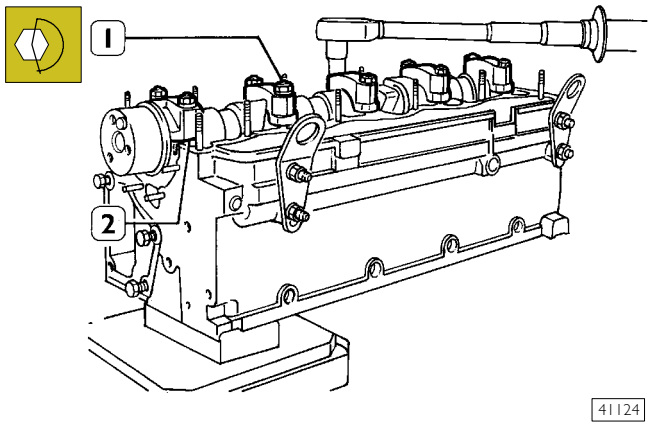

Screw nuts (1), that fasten caps (2) to cylinder heads, gradually and uniformly until bringing caps in contact with cylinder heads.
Then tighten nuts (1) to prescribed torque.

Figure 154

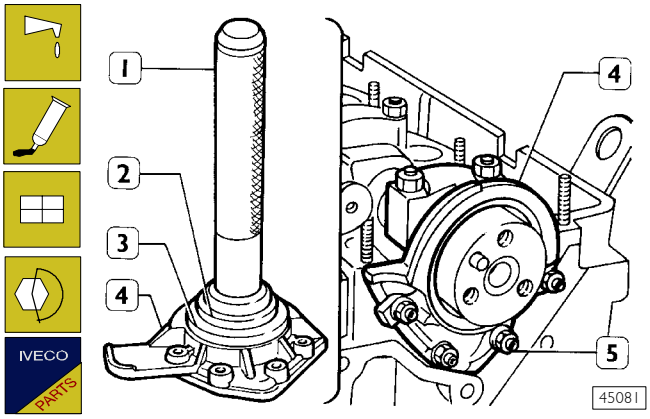

Fit the seal ring (3) together with the chock into the front cover (4) using the keying device 99374336 (2) and the grip 99370006 (1).
Lubricate the shank of the camshaft.
Spread IVECO 1905685 sealant on the mating surface of the front cover (4) and fit it onto the cylinder head. Tighten the fixing nuts to the prescribed torque.
Remove the chock.

The seal ring (3) is supplied as a spare together with the choke; this must not be removed from the seal ring until the front cover (4) has been fitted on the cylinder head.

Adjusting tappet clearance

Figure 155

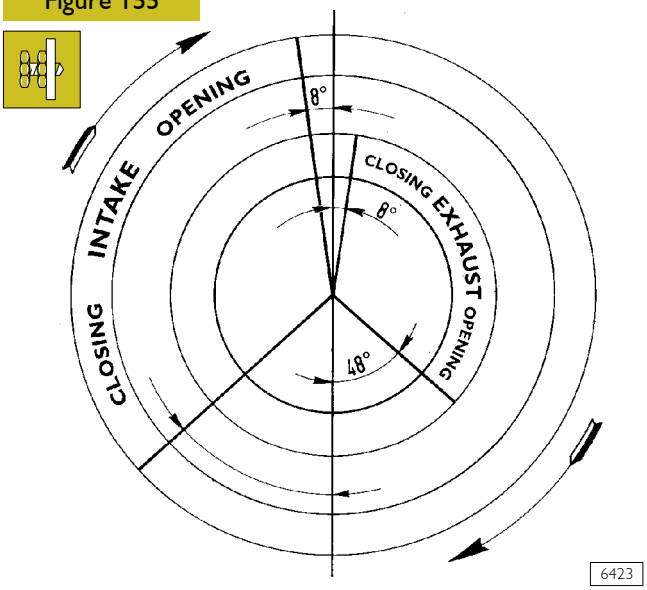

VALVE GEAR DIAGRAM

Adjustment of valve tappet clearance must be carried out accurately so as not to alter the required valve gear diagram, as would occur if the clearance were greater or lesser than prescribed.
In fact, an excessive clearance causes noise or delays opening and advances valve closing, while an insufficient clearance causes the opposite effect; while if the clearance is quite null the valves always remain a little open with very harmful consequences as far as the life of the valves and seats is concerned.

Figure 156

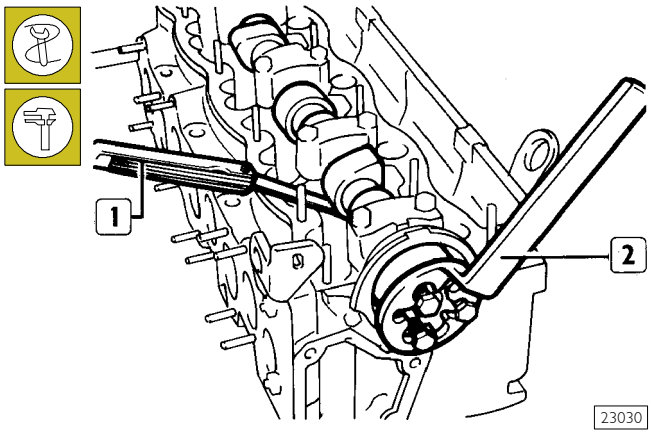

For adjusting valve tappet clearance proceed as follows:

- ❑ insert key 99350114 (2) on valve gear control fastening screws and rotate camshaft until setting valves to closing position;
- ❑ check, with a thickness gauge (1), that clearance between valve tappets and intake/exhaust cams is 0.5 ± 0.05 mm.

Figure 157

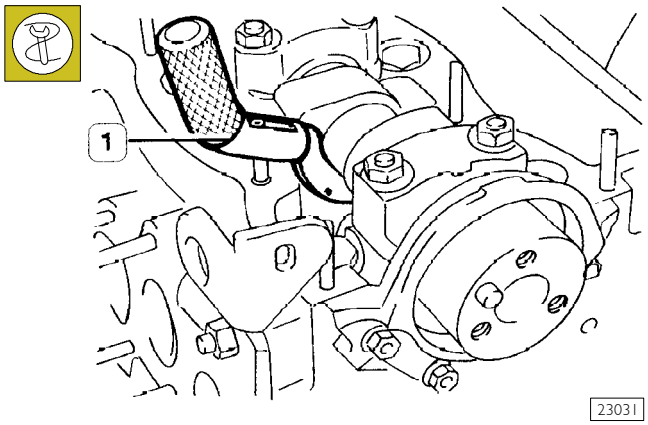

If it is necessary to replace the adjusting caps, to obtain the required operating clearance, proceed as follows:

- ❑ rotate valve tappets so as milling on edge are directed towards intake and exhaust ducts;
- ❑ insert tool 99360309 (1), between intake and exhaust valve tappets, and use it as a lever until valve tappets are fully compressed;

Figure 158

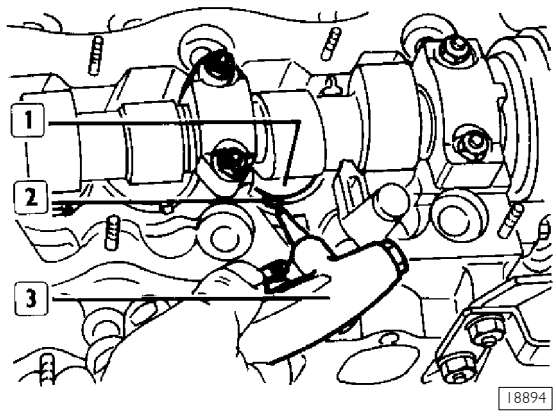

- ❑ with gun (3), address a compressed air jet in milling (2) so as to lift adjusting cap (1) to be replaced;
- ❑ remove adjusting cap with pliers 99380701.

Figure 159

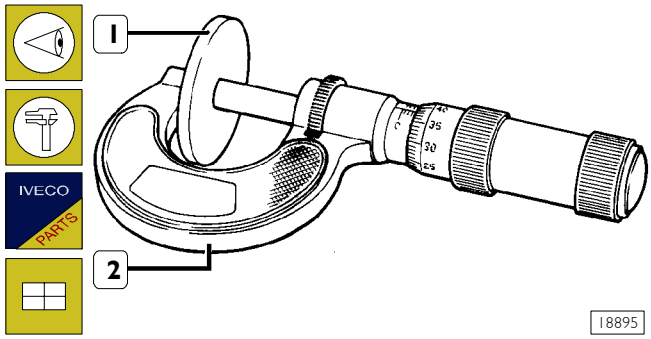

The thickness value of adjusting caps (1) is printed on one of their two surfaces. Should this value be illegible, measure it with a micrometer (2).

On fitting adjusting cap, printed value must be oriented towards valve tappets.

Valve tappet clearance adjusting caps are supplied as spare parts with the following thickness: 3,25 - 3,30 - 3,35 - 3,40 -3,45 - 3,50 - 3,55 - 3,60 - 3,65 - 3,70 - 3,72 - 3,75 - 3,77 - 3,80 - 3,82 - 3,85 - 3,87 - 3,90 - 3,92 - 3,95 - 3,97 - 4,00 - 4,05 - 4,10 - 4,15 - 4,20 - 4,25 - 4,30 - 4,35 - 4,40 - 4,45 mm.

Having to adjust valve tappet clearance with cylinder heads installed on engine, before compressing valve tappet with tool 99360309 (1, Figure 157), rotate engine with special tool, so as to set intake valve cam of the cylinder involved in valve tappet adjusting, turned approximately upward; in these conditions piston will be 10-13 mm from T.D.C., thus avoiding piston crawling with valves.

Refitting cylinder head

Figure 160

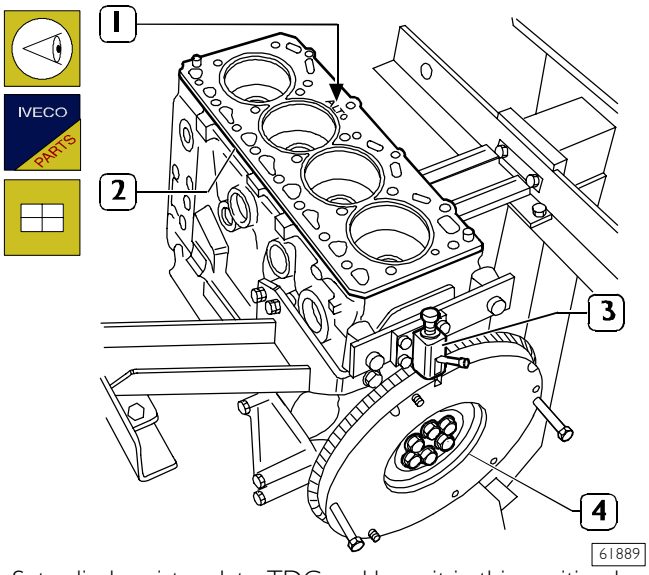

Set cylinder piston 1 to TDC and keep it in this position by locking engine flywheel (4) rotation and applying tool 99392214 (3) to block.
This condition is required to set timing.
Check that joining surface of cylinder heads and that on crankcase are clean.
Do not soil cylinder head gasket.
Place cylinder head gasket (2), according to thickness specified in paragraph "Checking piston protrusion", with inscription "ALTO" [top] (1) oriented towards head.
Arrow indicates the point where fitted gasket thickness is specified.

It is absolutely necessary to keep gasket sealed in its packing and to remove it from envelope only a short time before fitting it.

Figure 161

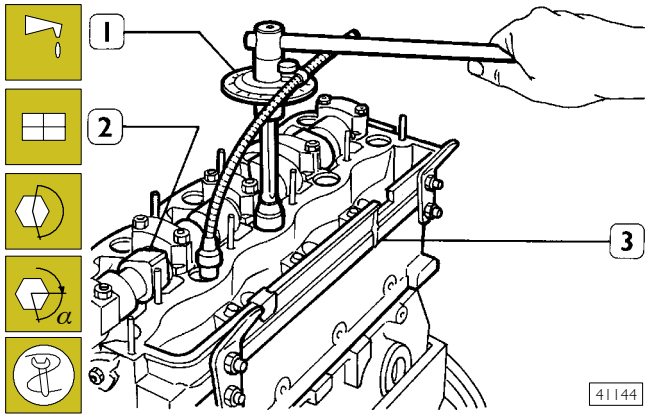

Turn camshaft (2) to close cylinder 1 valves.
Refit cylinder head (3).

Before reusing cylinder head fixing screws, check by micrometer whether screw thread diameter, measured at any point, is higher than 11.5 mm, otherwise replace screws.

Screw and tighten screws in three consecutive stages according to the sequence and procedure shown in the following figure.

Angle closing is carried out by means of tool 99395216 (1).

Figure 162

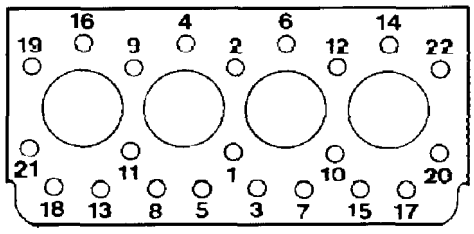

Tightening order diagram for cylinder heads fastening screws:

- ❑ 1st step: pre-tightening with torque wrench to torque of 60 ± 5 Nm;
- ❑ 2nd step: return to torque of 60 ± 5 Nm;
- ❑ 3rd step: closing with 180° ± 10° angle.

Figure 163

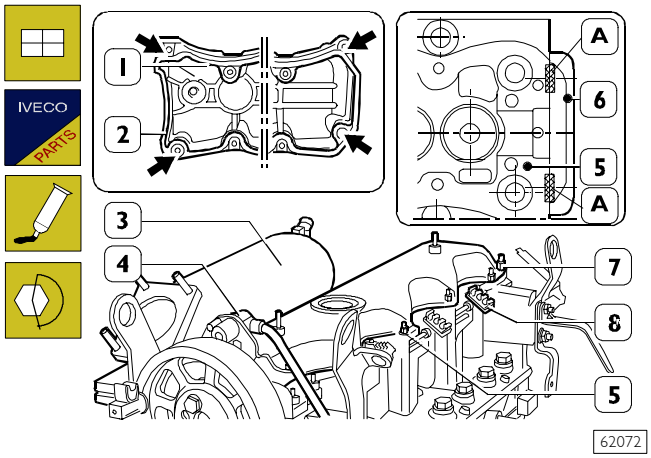

Fill spaces **A** between rear cover (6) and cylinder head (5) with Silastic 732 RTV sealant.
Fit seal (2) on tappet cover (1). Smear tappet cover corners (⇒) with SILASTIC 732 RTV (approx. 10g). Refit tappet cover (1) on cylinder head and tighten fixing nuts (7) to the specified torque.
Fit pipe and electric cable locking clamps (8) and tighten fixing nuts (5) to the specified torque.
Fit sensor (4) and support on tappet cover and check air gap as described in the relevant chapter.
Fit intake manifold (3).

543050 AUXILIARY MEMBER ASSEMBLY

Figure 164

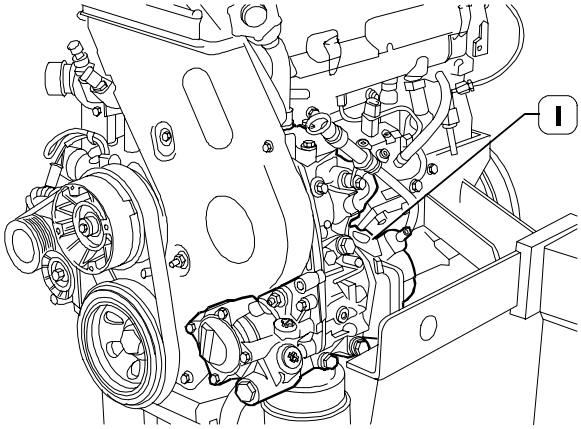

50677

Auxiliary components are collected into one support (1) fixed to engine upper block side and operated by the timing belt which controls the camshaft.
On the mounting there are oil ducts, for lubricating the various components.
The following components are fitted on said support: injection pump, oil pump and control valve, servo brake vacuum pump and power steering pump, double-action oil filter and heat exchanger.

Dismantling auxiliary member assembly

Figure 165

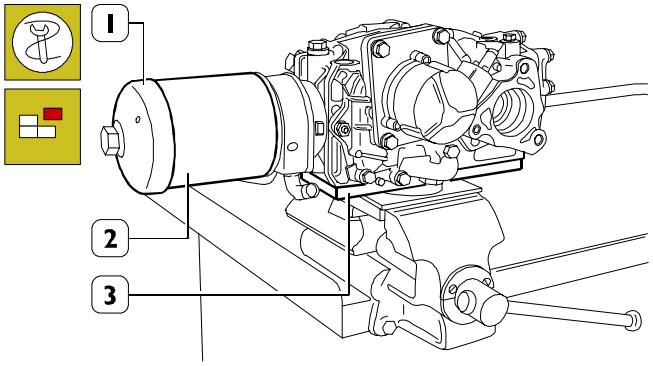

50677

Fit accessory equipments group with screws on support 99360363 (3) previously clamped in a vice.
Unscrew oil filter (2) with tool 99360091 (1).

Figure 166

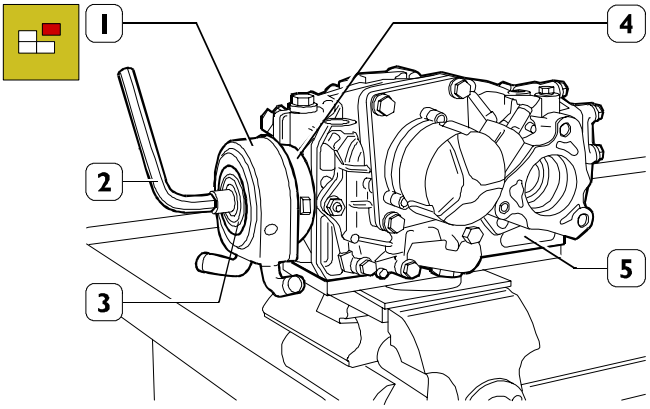

50678

With a socket head wrench (2) unscrew fittings (3) fastening heat exchanger (1) to the accessory equipments group (5) and mounting (4).

Figure 167

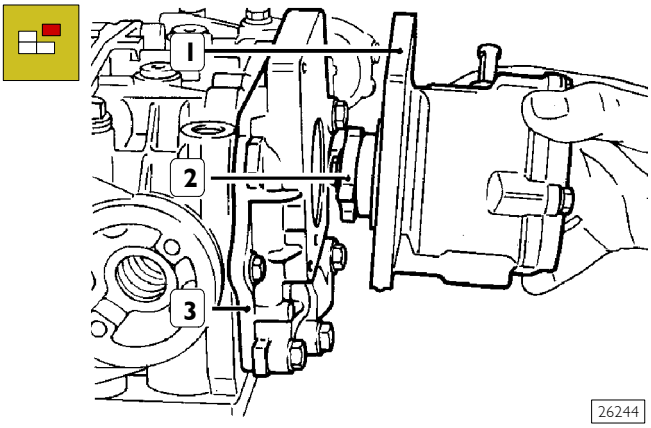

26244

Remove vacuum pump (1) complete with drive joint (2) and gasket.
Remove oil pump rear cover (3) complete with oil pressure control valve.

Figure 168

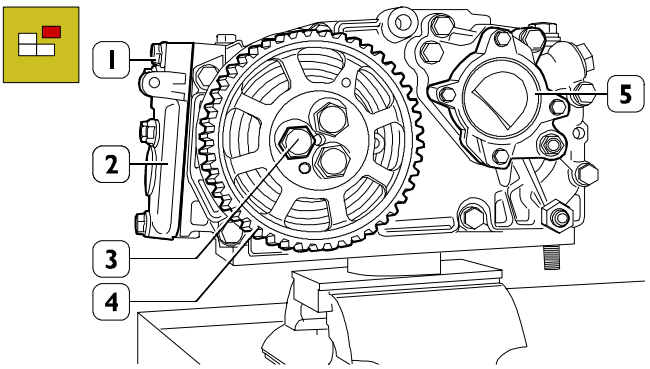

50679

Remove the power steering pump (5). Take out the screws (3) and extract the oil pump control gear (4). Take out the screws (1) and remove the top cover (2).

543075 Oil pressure control valve

Figure 169

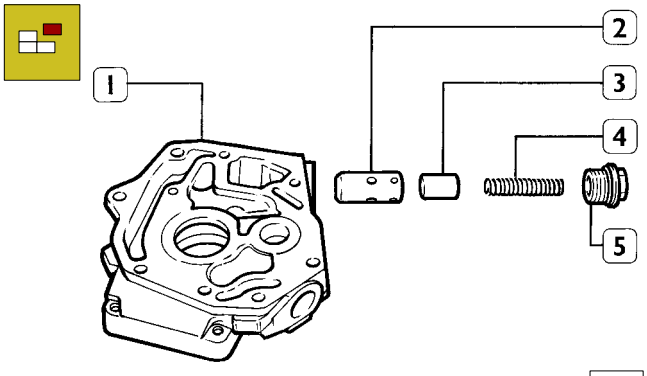

41812

Unscrew plug (5), remove spring (4) and control valve consisting of piston (3) and barrel (2) from the cover (1).
Check that: piston (3) slides freely into barrel (2) and does not show any traces of scoring and that spring (4) is not broken or yielded.

Pressure adjusting calibration to oil temperature of 100°C:
– minimum rpm: 0.8 bars
– maximum rpm: 3.8 bars

Figure 170

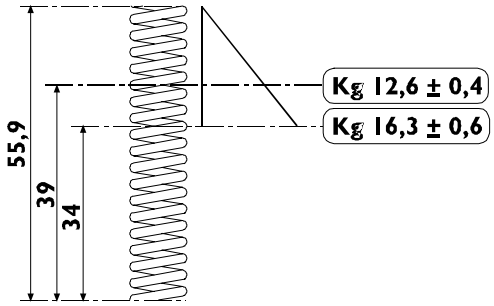

74971

MAIN DATA FOR ADJUSTING OIL PRESSURE CONTROL VALVE SPRING

543010 OIL PUMP

Figure 171

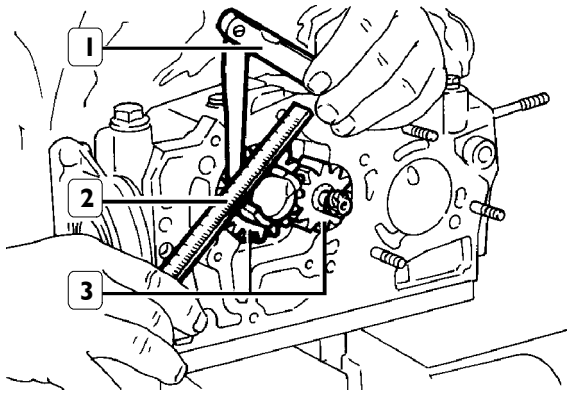

18908

With a rule (2) and a thickness gauge (1) check clearance between upper surface of gears (3) and cover supporting surface that must be 0.065 ÷ 0.131 mm; otherwise replace worn parts.

Figure 172

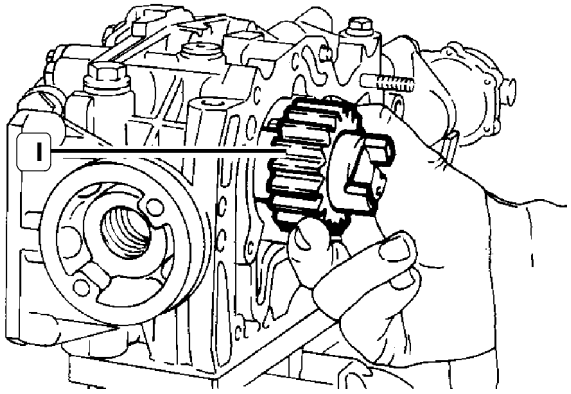

26245

Remove oil pump driven gear (1).

Figure 173

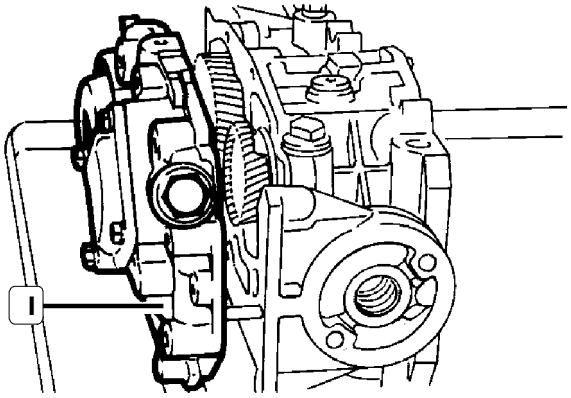

26246

Remove screws and front cover (1).

Figure 174

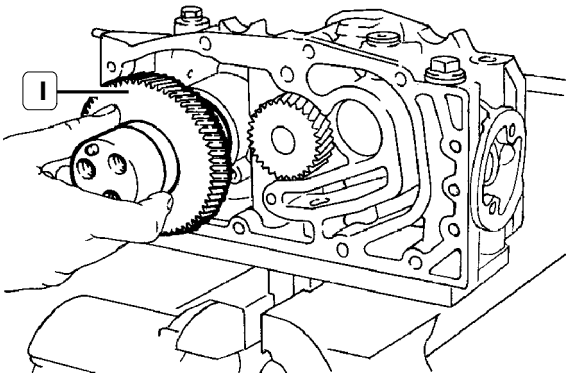

26247

Remove oil pump driving gear (1).

Figure 175

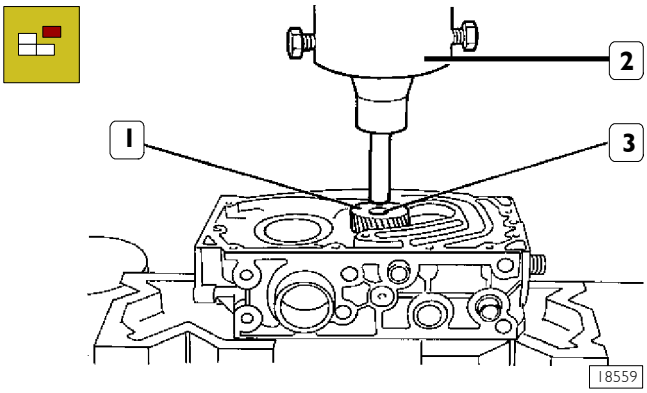

Remove driven gear (1) only if an excessive wear of said gear or of entire driving gear (3) is detected; this operation must be carried out under a hydraulic press (2).

Fitting auxiliary member assembly

Figure 176

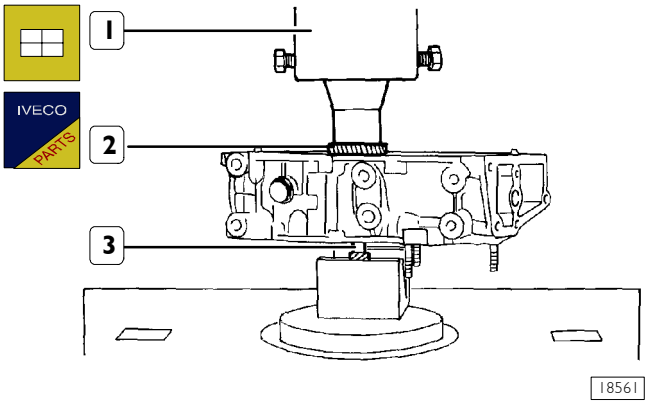

For assembling accessory equipments group, invert operations described for dismantling it observing the instructions described and illustrated here below.
Fitting operation of driven gear (2) on driving shaft (3) is to be performed with a hydraulic press (1), by heating gear and cooling shaft, so as a temperature difference of ~ 270°C between the two parts is found. Once fitting is completed, check that a space of 88 - 0.2 mm exist between outer surfaces of gears.

Figure 177

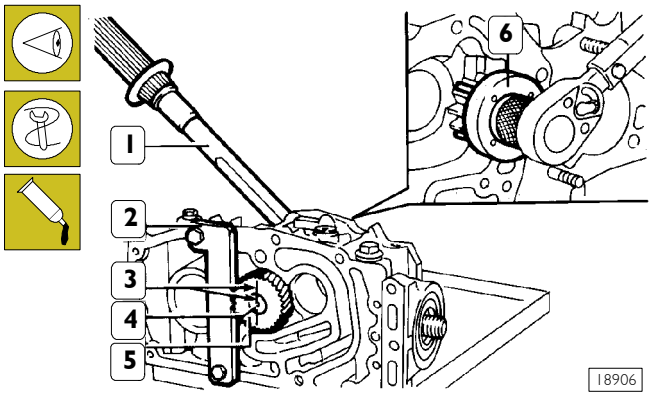

Check the torque resisting rotation between the driven gear and the oil pump driving shaft, proceeding as follows:

- ❑ apply tool 99360607 (2) to block rotation of gear (5);
- ❑ trace two reference marks (3) on shaft (4) and on gear (5);
- ❑ operate on the driving shaft with a torque wrench (1) calibrated at 64 Nm and tool 99360607;
- ❑ make sure the reference marks are perfectly aligned; replace the parts if they are not.

Figure 178

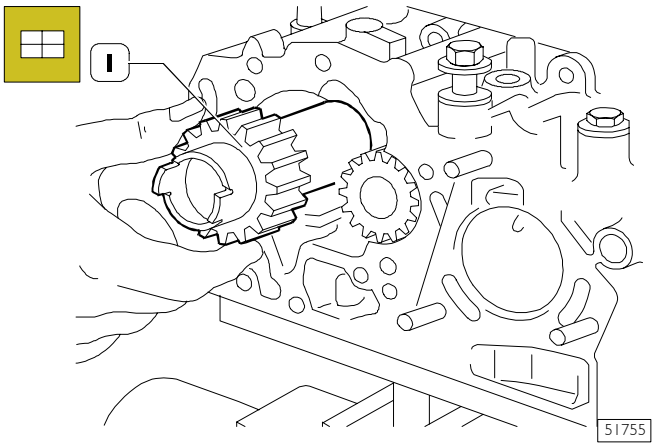

Fit the shaft (1) with the oil pump driven gear.

Figure 179

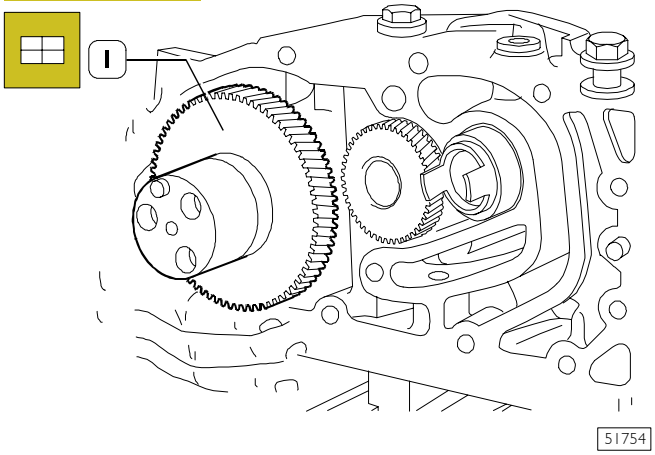

Fit the shaft (1) with the drive gear.

Figure 180

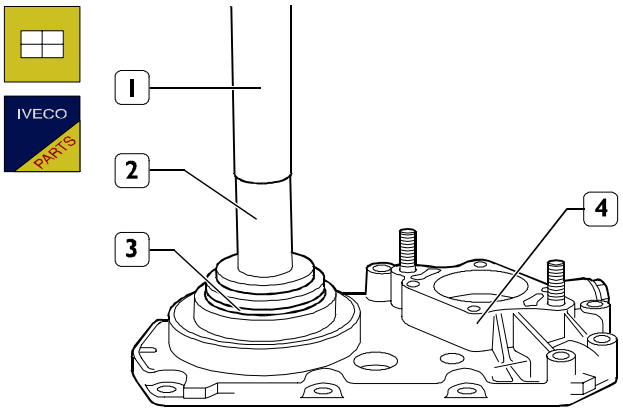

Using the keying device 99374336 (2) and the grip 99370006 (1), fit the gasket (3) onto the front cover (4).

Figure 181

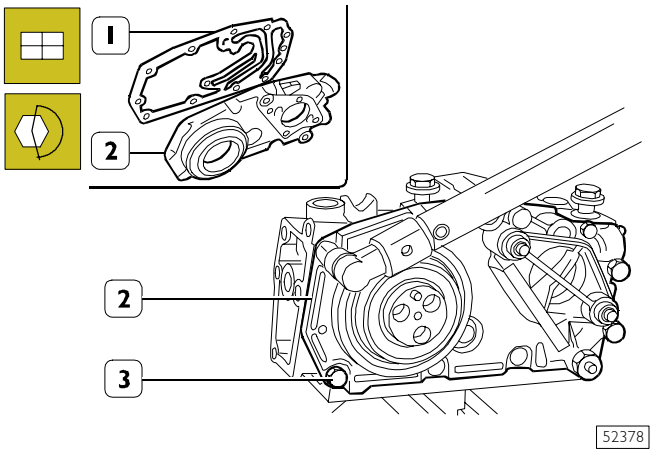

Fit the front cover (2) with the gasket (1) on the auxiliary member support box and tighten the relative screws (3) to the required torque.

Figure 182

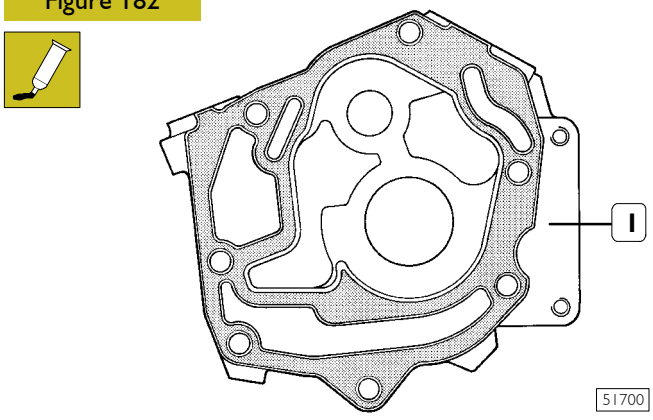

Clean and degrease the mating surfaces of the cover (1) and the box supporting the auxiliary parts.

Spread IVECO 1905685 sealant on the sealing surface of the rear cover (1), indicated by the darker area, evenly and without any breaks.

Figure 183

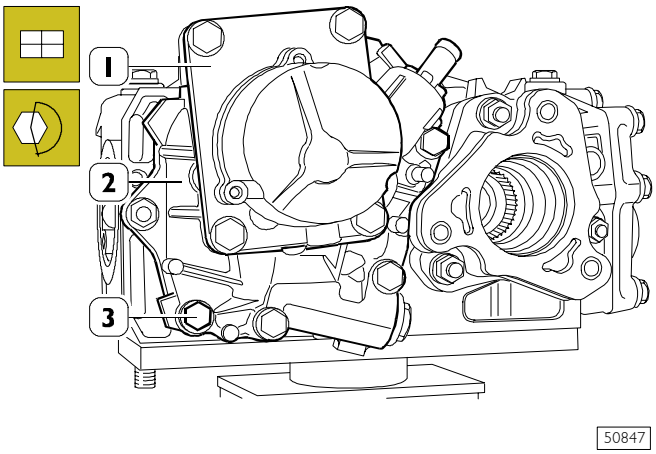

Fit the rear cover (2) and tighten the screws (3) and the fixing nuts to the required torque.

The rear cover (2) must be fitted within 10 minutes of applying the sealant.

Fit the vacuum pump (1).

Figure 184

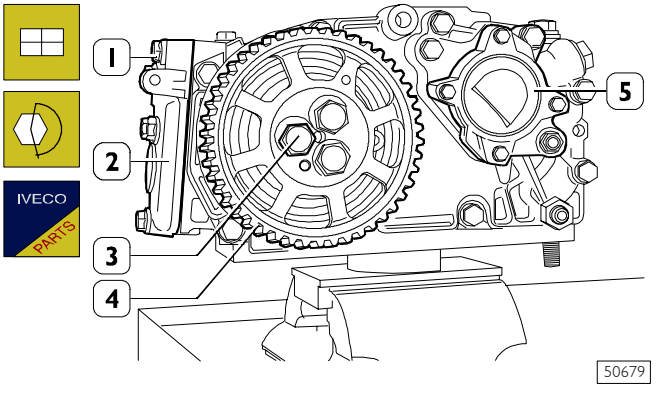

Fit the top cover (2) with the relative gasket and tighten the screws (1) to the required torque.

Fit the gear (4) and tighten the screws (3) to the required torque.

Fit the power steering pump (5).

543110 6-element heat exchanger

Figure 185

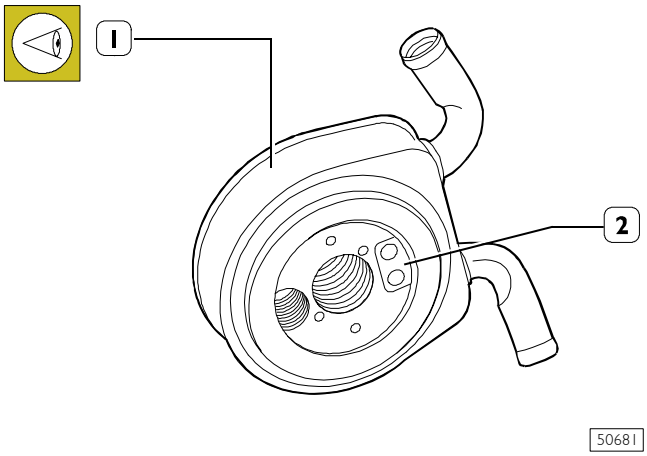

On supplying heat exchanger (1) with air at 1 bar pressure, verify that no leaks exist from oil flow side (2) and also from water flow side.

Test conditions:

Oil type	SAE 30
Oil temperature at heat exchanger inlet	115°C
Oil delivery	30 litres/min
Water temperature at heat exchanger inlet	85°C
Water delivery	20 litres/min
PERFORMANCE	
Exchanged heat quantity	4.0 kW
Oil pressure drop	0.85 bar
Built-in safety valve (2)	
Opening pressure	0.82÷1.03 bars

Figure 186

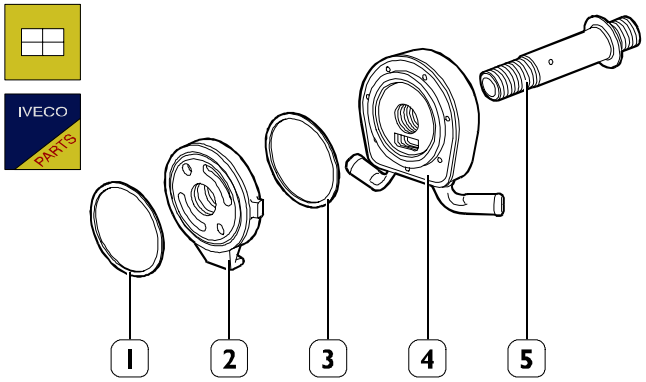

Carefully clean support (2), heat exchanger (4) and fitting (5) and particularly their oil ways.

Always replace seal rings (1 and 3).

Figure 187

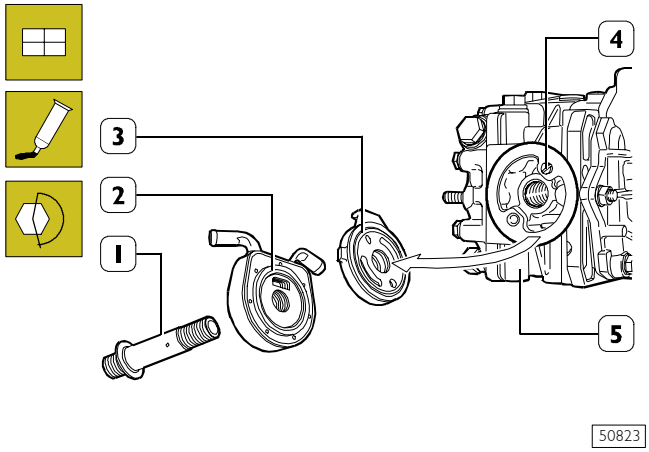

Position the mounting (3) on the auxiliary member assembly (5) so that the hole (→) coincides with the centring pin (4). Position the heat exchanger (2) on the mounting (3) and constrain it to the auxiliary member assembly (5) with the fitting (1).
Tighten the fitting (1) to the required torque.

Before mounting the fitting (1), spread IVECO sealant 1905683 onto its thread.

Figure 188

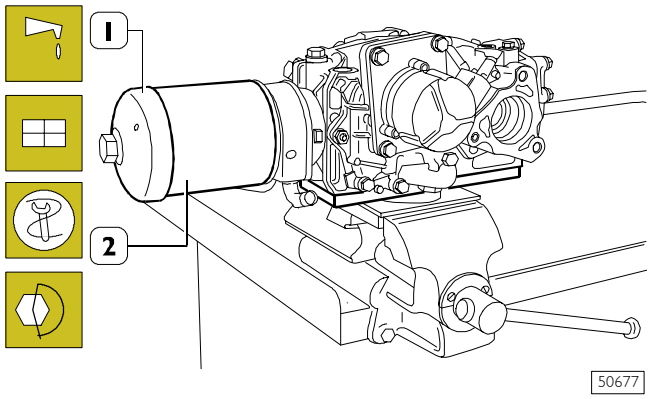

Lubricate sealing rings with engine oil and place them on oil filter (2).

Screw oil filter on fittings (1, Figure 187) and tighten it with tool 99360091 (1) to 25 Nm torque.

Figure 189

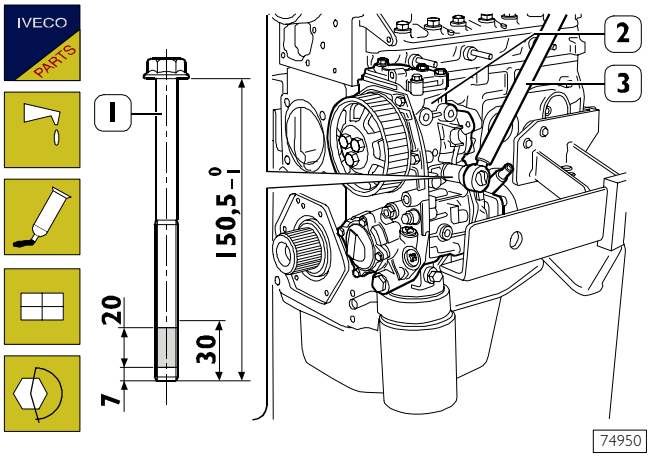

Mount the auxiliary element assembly (2) fitting the gasket in between. Tighten the fixing screws with a torque wrench (3) to the prescribed torque.

As spares, the screws (1) are supplied with the thread pre-treated with LOCTITE 506 sealant.
If they are reused, clean the thread thoroughly and apply IVECO 1905683 sealant at the section shown in the figure.

5050 LUBRICATION

General

Engine lubrication is forced circulation type and its is performed by the following components:

- gear oil pump built in accessory equipments group, a pressure control valve built in rear cover of accessory equipments group;
- a Modine type heat exchanger with built-in safety valve;
- a double-action oil filter with built-in safety valve.

Operation (see Figure 191)
Engine oil is sucked from sump by oil pump (8) through suction strainer (9) and sent under pressure to heat exchanger (4) where it is cooled.
Oil passes through oil filter (5) and conveyed to lubricate concerned components through ducts or pipes.
Once lubrication cycle is achieved, oil returns to sump by gravity. Oil filter can be cut out by built-in safety valve, in case it is clogged. Also heat exchanger ,in case of clogging, is cut out by a safety valve.

To remove-check and refit the parts forming the oil pump and oil pressure adjustment valve, see "AUXILIARY MEMBER ASSEMBLY".

540480 Oil vapour recycling system

Figure 190

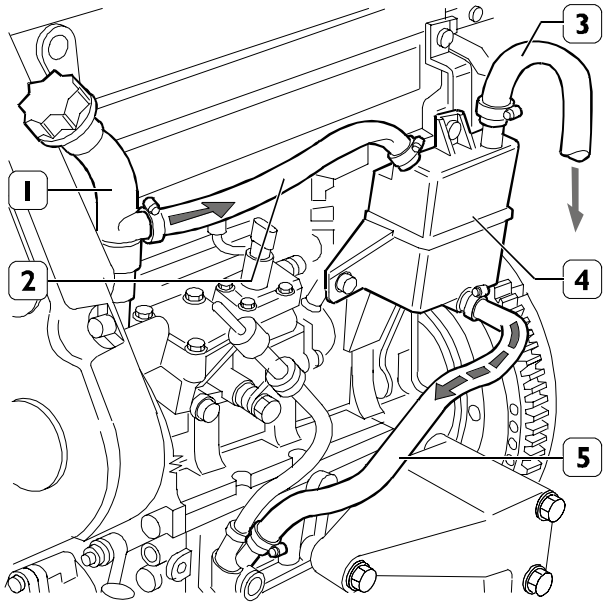

OIL VAPOUR RECYCLING SYSTEM DIAGRAM

Oil vapours formed into oil sump during engine running, pass through oil filler (1), are ducted into pipe (2) and then collected into condenser (4) where condensed vapours are drained into oil sump through pipe (5) and put into circulation again.
Exceeding vapours, if any, are discharged into atmosphere through pipe (3).

Figure 191

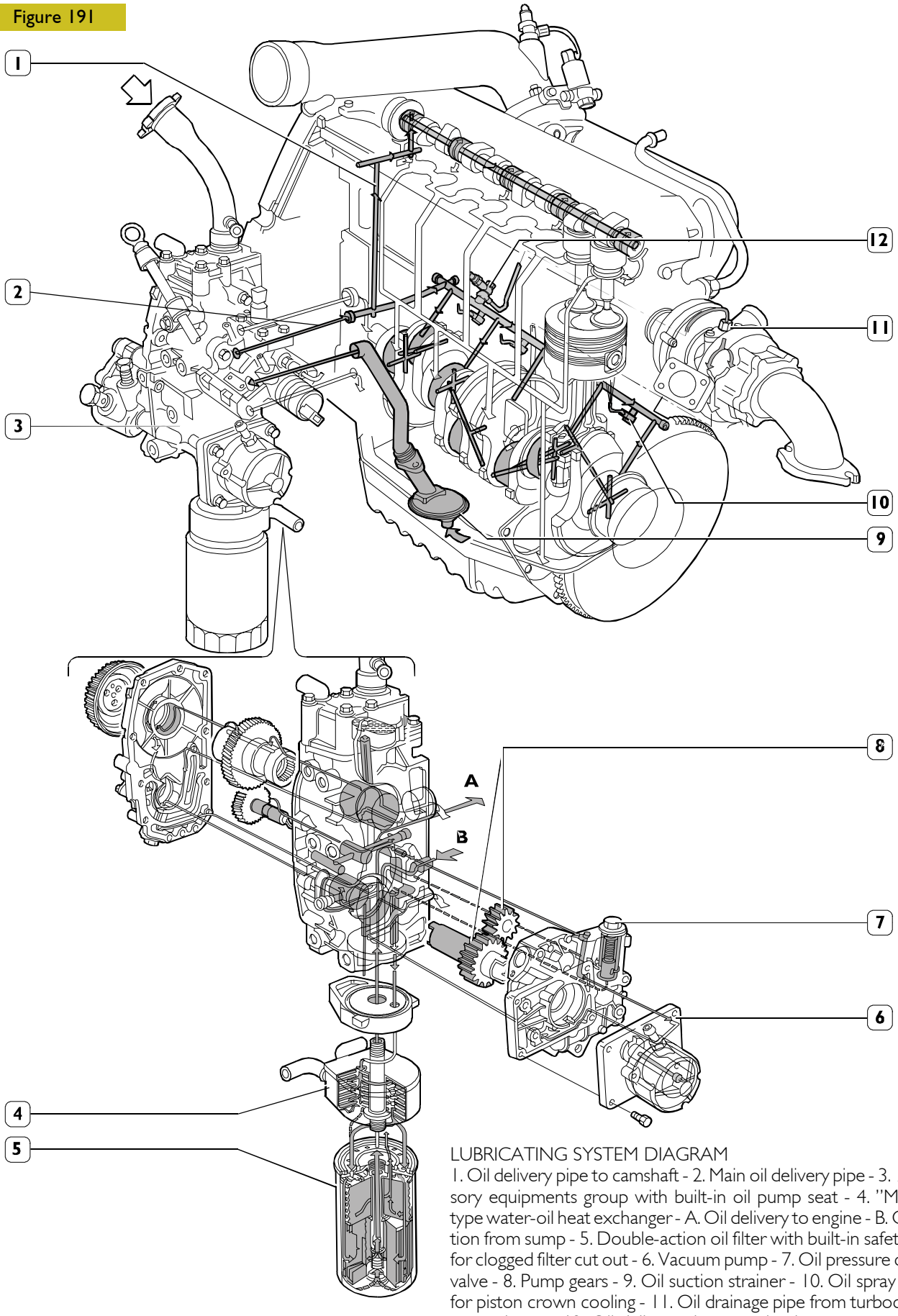

LUBRICATING SYSTEM DIAGRAM
1. Oil delivery pipe to camshaft - 2. Main oil delivery pipe - 3. Accessory equipments group with built-in oil pump seat - 4. "Modine" type water-oil heat exchanger - A. Oil delivery to engine - B. Oil suction from sump - 5. Double-action oil filter with built-in safety valve for clogged filter cut out - 6. Vacuum pump - 7. Oil pressure control valve - 8. Pump gears - 9. Oil suction strainer - 10. Oil spray nozzle for piston crown cooling - 11. Oil drainage pipe from turbocharger to crankcase - 12. Oil delivery pipe to turbocharger.

5432 COOLING

Figure 192

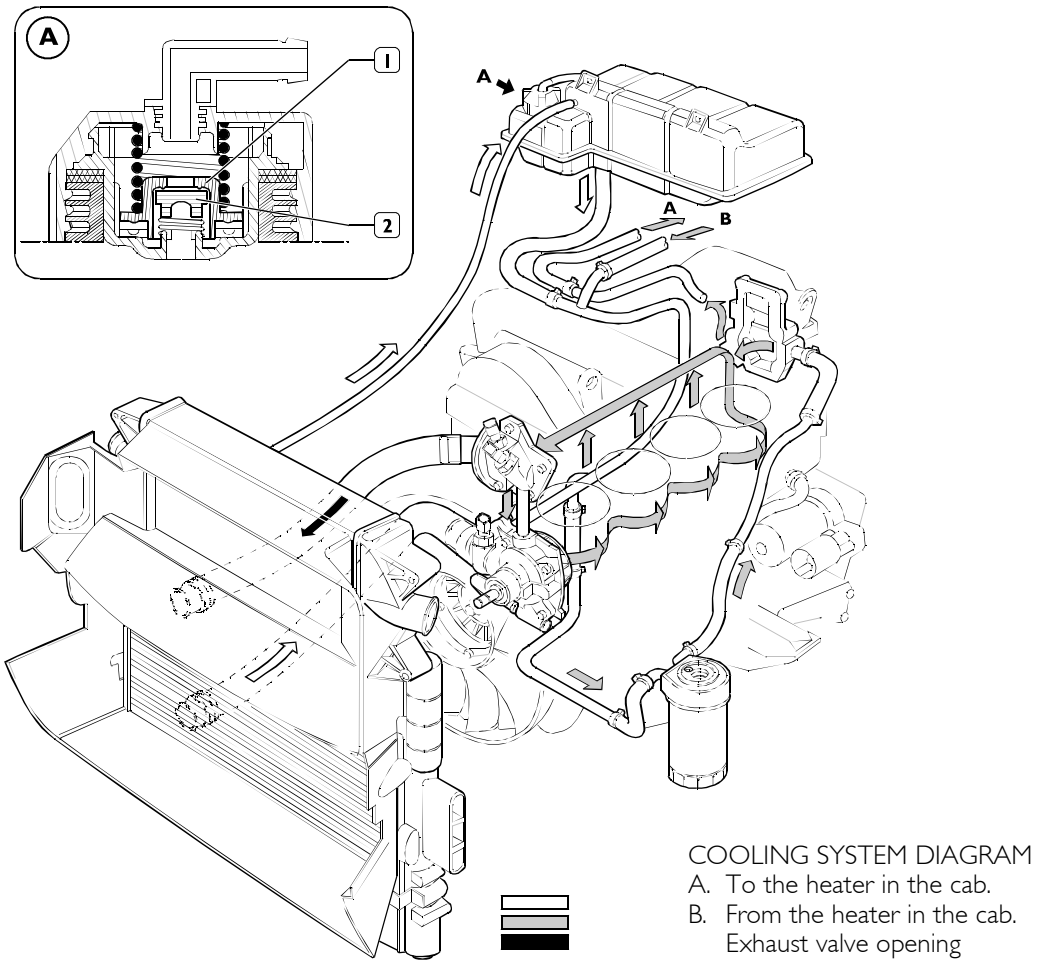

COOLING SYSTEM DIAGRAM
A. To the heater in the cab.
B. From the heater in the cab.
Exhaust valve opening

52172

Description

The engine's cooling system is the closed-circuit, forced circulation type and comprises the following parts:

- an expansion tank whose plug has two valves incorporated in it: an outlet (2) and an inlet (1) that govern the pressure in the system;
- a coolant level sensor at the base of the expansion tank;
- an engine cooling module to dissipate the heat taken from the engine by the coolant with the heat exchanger for the intercooler;
- a heat exchanger to cool the lubricating oil;
- a centrifugal-type water pump built into the crankcase onto which the electric fan is keyed;
- an electric fan comprising an electromagnetic coupling on whose shaft turns an idle hub fitted with a mobile metal plate and on which is mounted the fan.

Coolant temperature for:

- turning on the fan: 94°C ± 2°C;
- turning off the fan: 80°C ± 2°C;
- a 3-way thermostat governing coolant circulation.

Operation

The water pump driven by a the crankshaft via a poly-V belt sends the coolant into the crankcase and with a greater head into the cylinder head.
When the coolant temperature reaches and exceeds the working temperature it causes the thermostat to open and from here the coolant is sent to the radiator and cooled by the fan.
The pressure inside the system due to the change in temperature is governed by the outlet (2) and inlet valves built into the expansion tank filler cap (detail A).

The outlet valve (2) has a twofold function:

- to keep the system slightly under pressure so as to raise the boiling point of the coolant;
- to discharge into the atmosphere the excess pressure generated in case of high temperature of the coolant.

The function of the inlet valve (1) is to permit transferring the coolant from the expansion tank to the radiator when, inside the system, a low pressure is produced due to the decrease in volume of coolant as a result of its temperature lowering.
Outlet valve opening 1 ± 0.1 kg/cm^2.
Inlet valve opening 0.005 B 0.02 kg/cm^2.

543212 Electromagnetic pulley

Figure 193

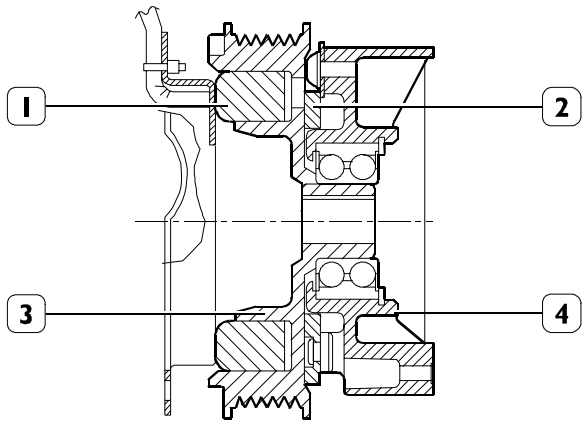

50685

ELECTROMAGNETIC PULLEY SECTION

Specifications

*	Torque that can be entered at 1000 rpm and at 20°C	23 Nm
*	Torque that can be transmitted at 20°C with the clutch run in	43 Nm
	Voltage	12 Volt
	Consumption	24 W

When cooling fluid temperature reaches the value of 94° ± 2°C, thermometric switch allows electromagnet (1) to be supplied and that, becoming magnetized, it attracts movable plate (2) thus causing hub (4) to become integral with electromagnetic joint (3).

543210 Water pump

Figure 194

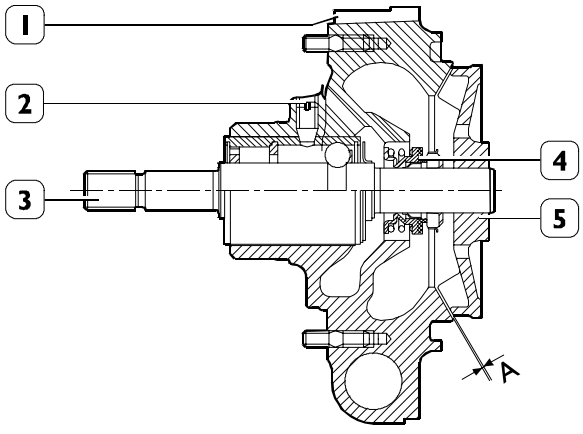

50686

WATER PUMP LONGITUDINAL SECTION
1. Pump body - 2. Bearing locking screw - 3. Pump driving shaft complete with bearing - 4. Sealing ring - 5. Impeller

A = 0.56 ÷ 1.08 mm; assembly clearance between impeller and sealing gasket for water pump body.

Figure 195

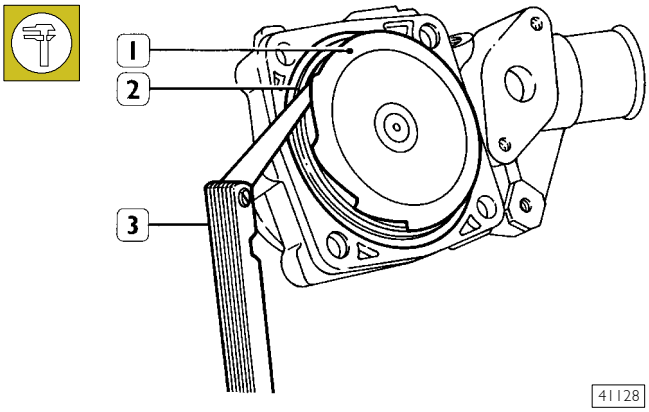

41128

Use a thickness gauge (3) to check that the distance between impeller (1) and sealing ring (2) is 0.56 ÷ 1.08 mm.
Also check that there are no cracks in pump body. If there are, replace the whole water pump.

543250 Thermostat

Figure 196

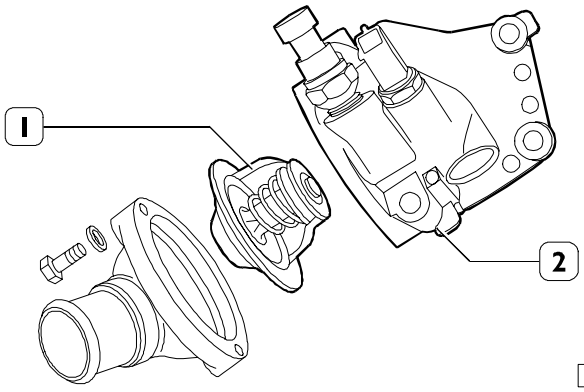

50687

By-pass type thermostat (1) is inserted into the support (2) fixed to cylinder heads and it does not need any adjustment.
If there are any doubts about its serviceability, replace it.
The thermometric switch/transmitter and water temperature sensor are fitted on the thermostat body.

Figure 197

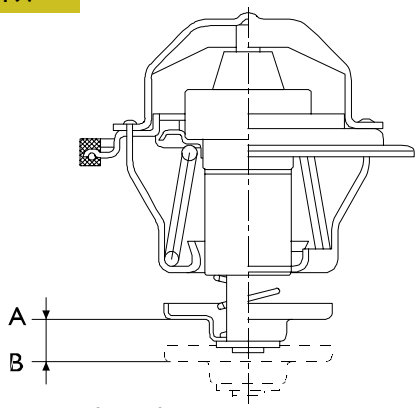

50822

A. Stroke start 82° ± 2 °C.
B. Stroke at 97° ≥ 7 mm
Stroke at 110° ≤ 10.5 mm
The stroke of 7 mm within less than 60"
Water blow-by with thermostat and valve closed
≤ 2 l/h

Figure 198

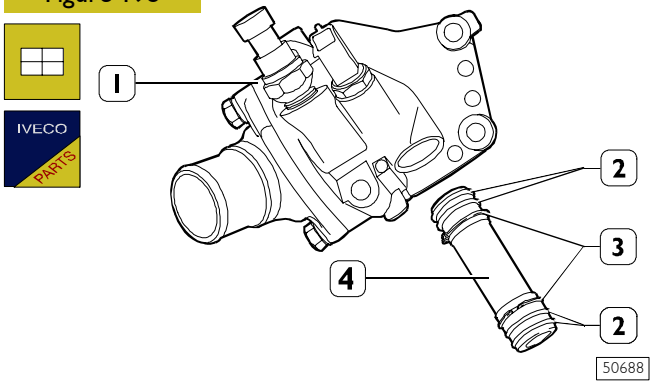

Fit new seal rings (2) and split rings (3) on the connecting pipe (4) and insert this into the thermostat box (1).

Figure 199

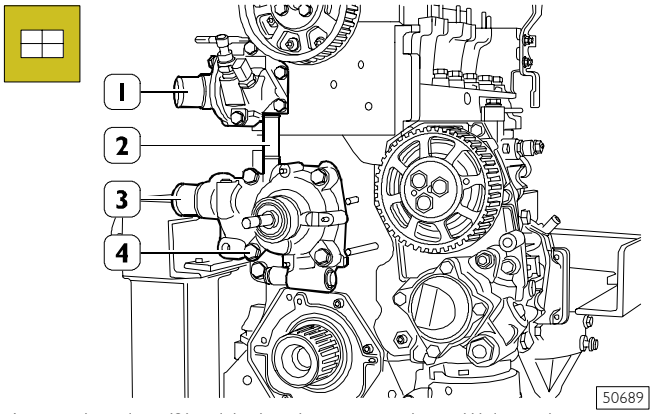

Insert the pipe (2) with the thermostat box (1) into the water pumpe (3) and fit the parts assembled in this manner onto the crankcase and onto the cylinder head.

As spares, the screws (4) are supplied with the thread pre-treated with LOCTITE 506 sealant.
If they are reused, clean the thread thoroughly and apply IVECO 1905683 sealant on the first 15 mm.

TIMING AND AUXILIARY MEMBER CONTROL

Figure 200

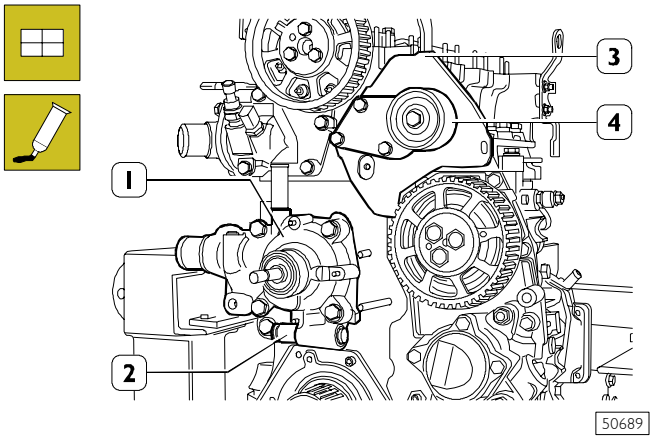

Insert the reaction pin (2) into its seat in the water pumpe (1). Fit the guard (3) and the fixed tightener (4).

Figure 201

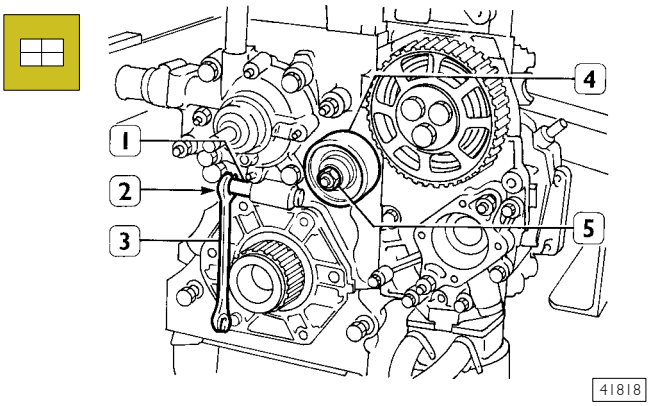

Fit the mobile tightener mounting without locking the nut (5) fixing the roller (4).

Insert, between barrel (1) and push rod (2), a special wrench (3) so as to annul push rod pressure on belt tightener roller (4).

Setting the timing system

Figure 202

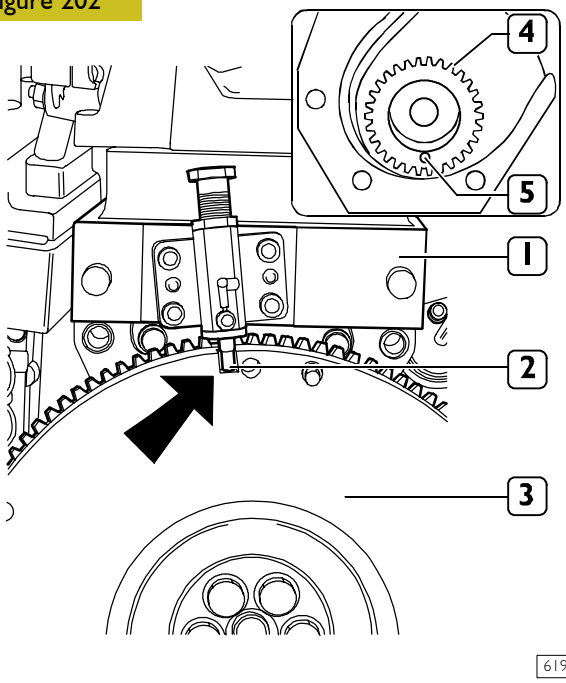

Check whether cylinder 1 piston is at TDC.
This condition takes place when tool 99395214 (1) pin (2) is fitted into engine flywheel (3) slit (⇒) and control gear hole (5) and timing gear (4) are facing downward.

Figure 203

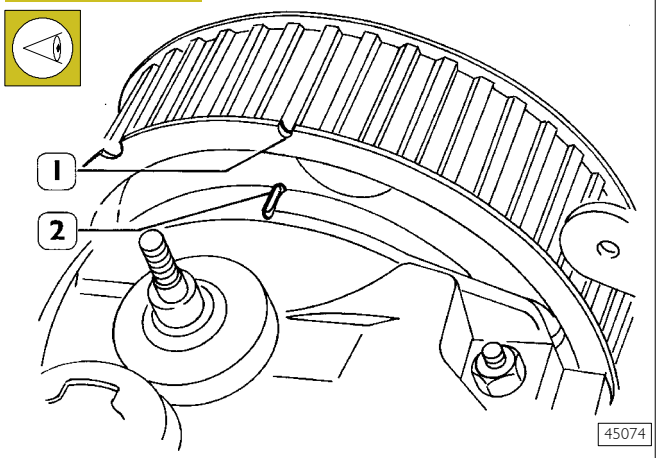

❑ Make coincide notch (1) engraved on camshaft driving toothed pulley, with that (2) engraved on valve tappets cover.

Figure 204

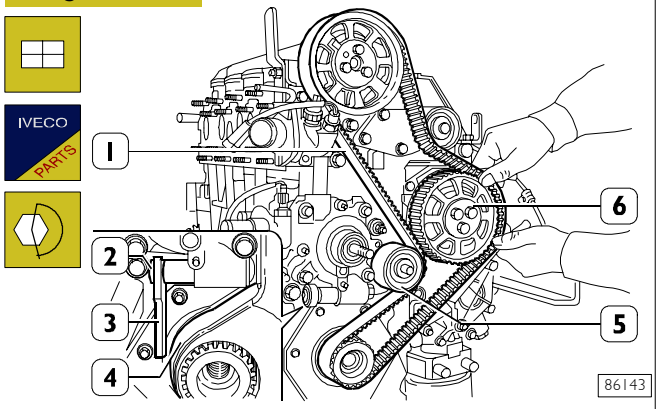

❑ Fit toothed belt (1);

❑ fit lower cover (4) and tighten fastening screws and nuts to prescribed torque;

❑ remove tool (3) so as pushing rod (2), acting on belt tightener (5), makes toothed belt taut (1);

Figure 205

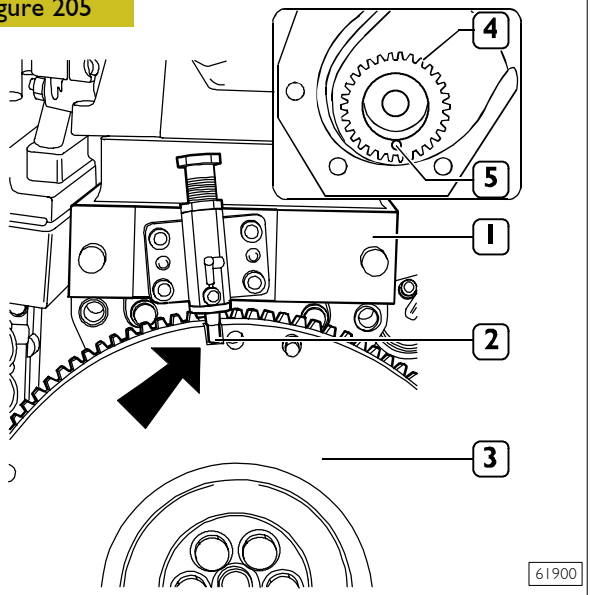

❑ remove engine flywheel (3) slit (⇒) from tool 99395214 (1) pin (2);

❑ Turn the crankshaft slowly in the direction of rotation by two turns and check that hole (5) in gear (4) is facing downwards and that the pin (2) of the tool (1) is inserted in the slot (à) through the flywheel (3) when the timing belt is taut; the notches (1 and 2, Figure 203) must be aligned.

Figure 206

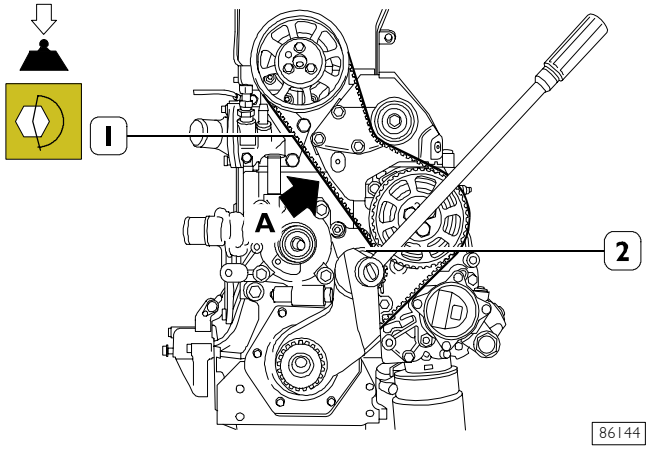

❑ apply a torque of 28 ÷ 30 Nm to the crankshaft (3) to tension the belt (1) slightly;

Use tool 99395849 to check timing belt tension (1) which must be 90 ÷115 Hz in point A.

Figure 207

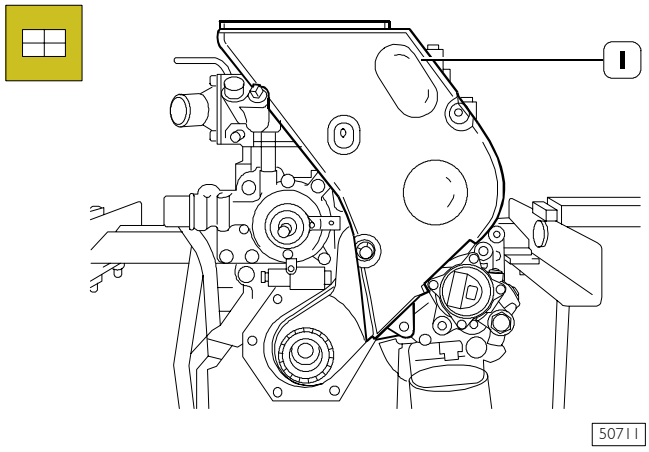

Fit upper cover (1).

Figure 208

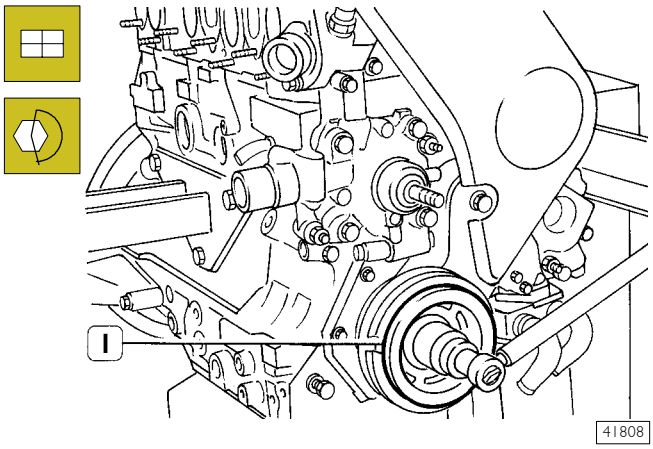

Key the pulley (1) with the spacer, if any, found on disassembly or determined as described in "Checking crankshaft pulley alignment"; block engine flywheel rotation with tool 99360306 and tighten the setscrew with a torque wrench to the required torque.

Figure 209

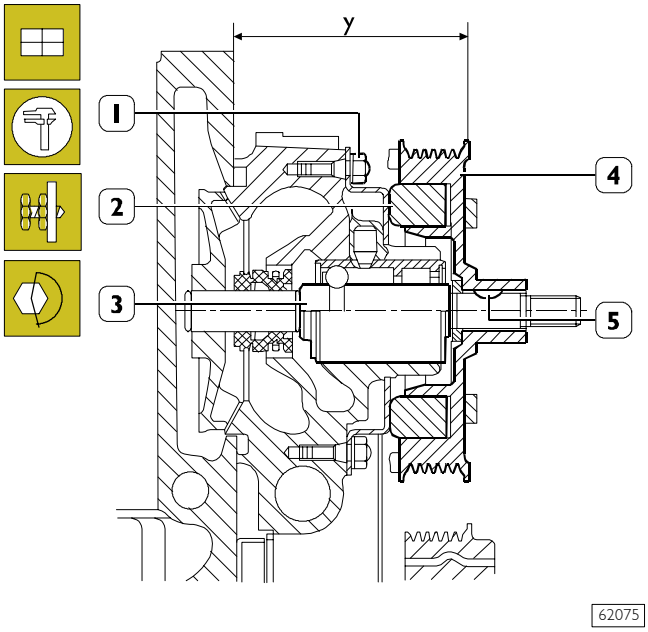

Fit the electromagnetic coupling (2) onto the water pump shaft (3) and tighten the nuts (1) to the required torque.

Checking and aligning electromagnetic coupling pulleys

Fit the puller key (5), puller (4) and measure the distance **Y** about 88.9 to 90.1 mm.

Figure 210

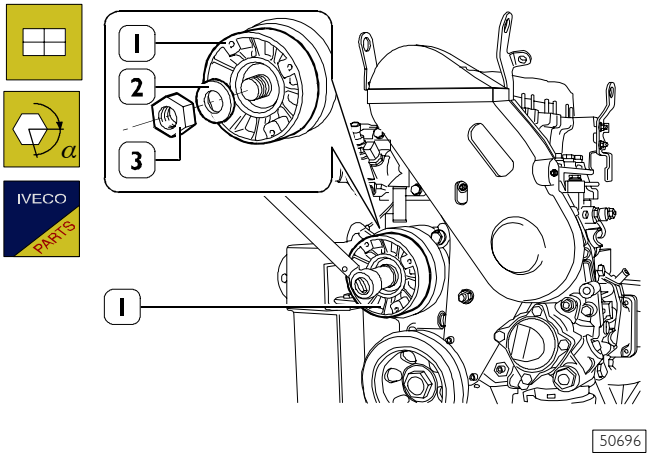

Fit the hub (1), washer (2) and retaining nut (3).
Block rotation of the hub (1) and tighten the nut (3) in two stages.

The hub (2) locking nut is left-handed. This nut (3) must be replaced at every dismantling.

1st step: tightening with torque wrench at 40 Nm torque;

2nd step: closing with 110° ± 10° angle.

Angle closing is performed with tool 99395216.

Figure 211

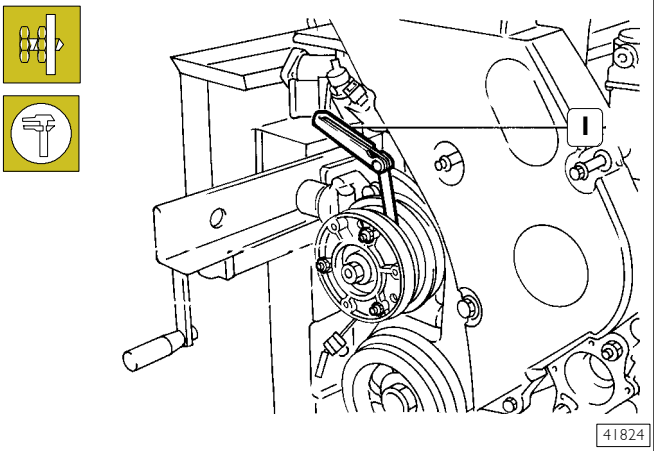

By means of thickness gauge (1) check the air gap that should be of 0.25 ÷ 0.45 mm.

Figure 212

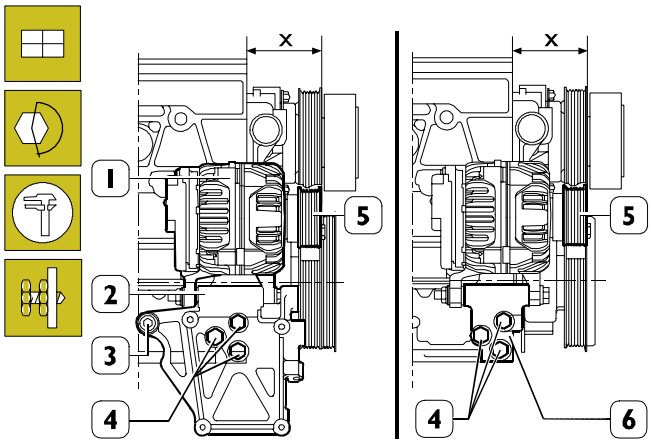

62076

Fit the mounting (2 or 6) complete with alternator (1) back onto the crankcase base:

- ❑ mounting (2), for engines with air-conditioner compressor;
- ❑ mounting (6), for engines without air-conditioner compressor.

Tighten the screw (3) to a torque of 80 ÷ 90 Nm
Tighten the screw (4) to a torque of 40 ÷ 50 Nm.

Checking alternator pulley alignment

Check that the distance **X** between the crankcase and the end of the pulley (5) is 88.7 ÷ 90.1 mm.

Figure 213

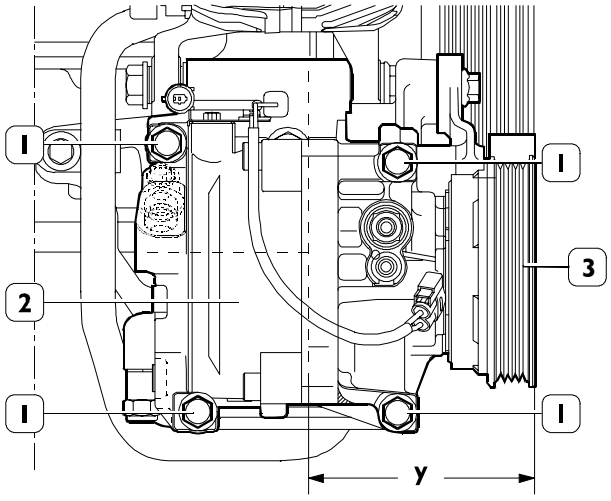

62077

Refit compressor (2) and tighten fixing screws (1) to 25 Nm torque.

Checking compressor pulley alignment

Check whether distance **y** between block and pulley end (3) is 106.96 ÷ 108.56 mm.

544012 Adjusting alternator - water pump drive belt tension

Figure 214

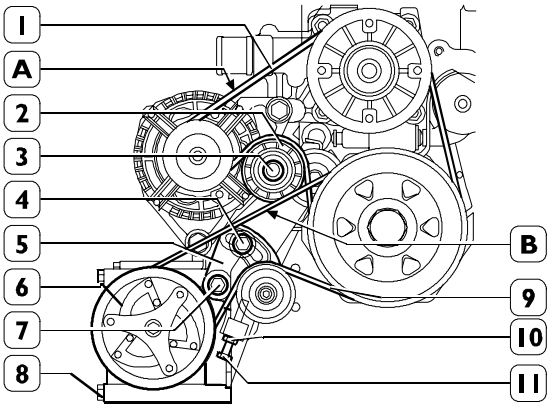

50698

Cancel the action of the automatic tightener (2) with the screw (3).

Fit the drive belt (1) taking care to position its ribs correctly in the respective races of the pulleys.
Release the automatic tightener (2). Turn the crankshaft by 1 turn to settle the belt.
Using appliance 99395849, measure the tension of the belt (1) in section **A** water pump - alternator that must be 140 ± 5 Hz.

544035 Adjusting compressor - air-conditioner drive belt tension (see Figure 214)

Fit compressor (6) and tighten fixing screws (8) to 25 Nm torque.
Fit belt tighteners (5) without tightening screws (4 and 7).
Fit control belt (9) taking care to position its ribs into pulley grooves.
Operate on screw (11) to tension belt (9) and rotate drive shaft by one turn. Use tool 99395849 to check whether frequency in compressor-drive shaft section **B** is equal to 160 ± 10 Hz which corresponds to 500 ± 50 Nm.
Otherwise operate on screw (11).
Tighten screws (4 and 7) to 25 Nm torque.
Unscrew two turns screw (11) and lock nut (10) to 25 Nm torque.

Figure 215

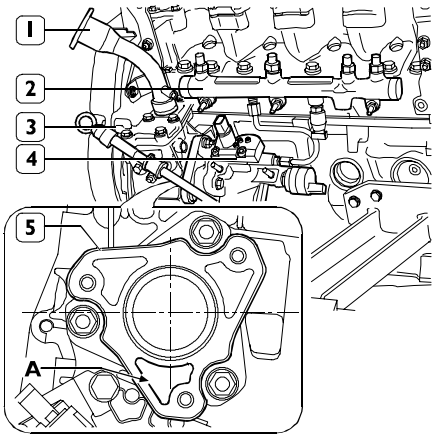

74951

If the pump mount (5) had been removed, when fitting it on you need to insert a new gasket and position the mount (5) so that the hole A faces downwards.

Refit high pressure pump (4), oil dipstick pipe (3), oil filler (1) and rail (2).

Should high pressure pump (4) joint be replaced, use tool 99365143 to lock joint rotation when moving fixing nut and tool 99342138 to remove the joint from high pressure pump shaft.
After fitting the new joint, tighten the fixing nut to the specified torque.

Figure 216

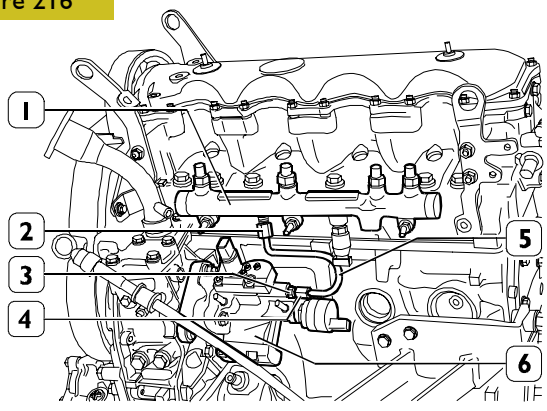

62078

Connect the pipe (5) to the high-pressure pump (6) and to the hydraulic accumulator (1).

Pipe (5) connections (4) shall be tightened to 20 Nm torque using the wrench provided in kit and torque wrench 99389833.
Connection (4) shall be tightened by keeping high pressure pump hexagon (3) stopped at the same time.
Pipes (5) shall always be replaced after removing.

For engine 8140.435 only.

Since engine No. 3089322, a rail with the same configuration but without flow limiters and pressure relief valve has been mounted. The same prescriptions specified for the previous one shall be complied with.

Figure 217

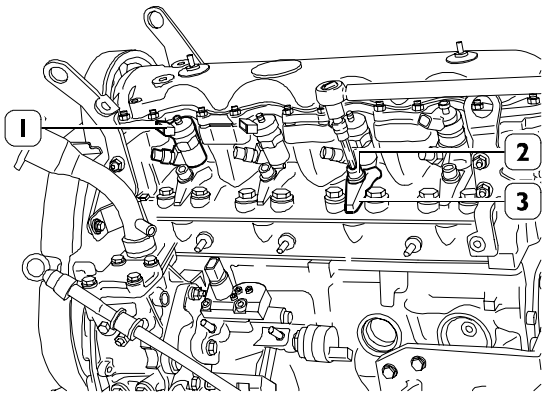

50699

Fit the electro-injectors (1), position the brackets (3) on them and tighten the fixing screws (2) to the required torque.

Figure 218

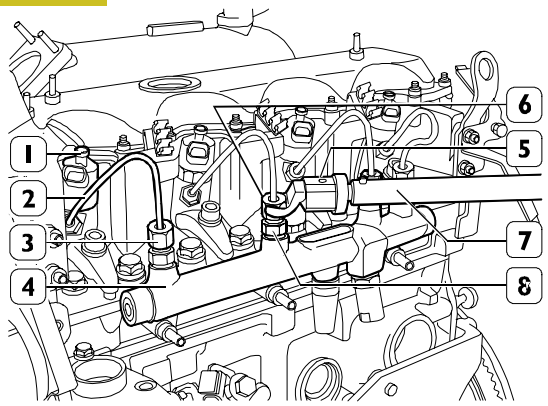

62079

Connect the pipes (2) to the electro-injectors (1) and to the hydraulic accumulator (4).

The couplings (3) of the pipes (2) must be tightened to a torque of 20 Nm, using the wrench 99317915 (5) and the torque wrench 99389833 (7).
The couplings (3) must be tightened with a specific wrench keeping the hexagon (6) of the electro-injectors (1) and, if applicable, the hexagon (8) of the flow limiting valves stationary.
The pipes (2) have to be changed with new ones with each removal.

Figure 219

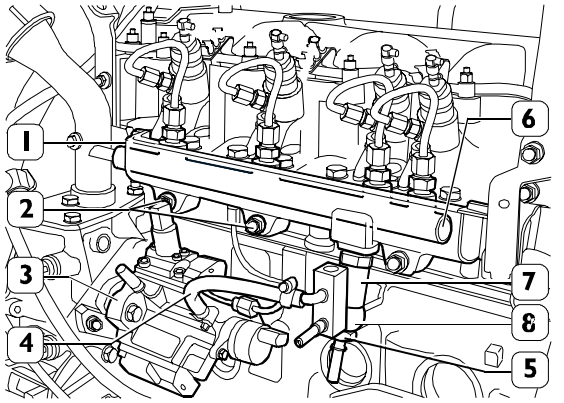

74952

Fit protection (1) on rail (6) and tighten nuts (2) to the required torque. Hold valve (7) and connect fuel drain connection (8) to it with hose (5).
Connect pipe (4) to high pressure pump (3).

Figure 220

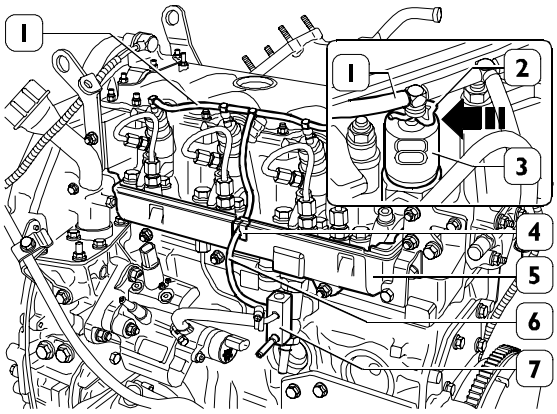

62860

Press clips (2) in the direction shown by the arrow and connect pipe connection (1) to injectors (3).
Fit rubber plug (4) into protection (5) and connect pipe (6) to connection (7).

Figure 221

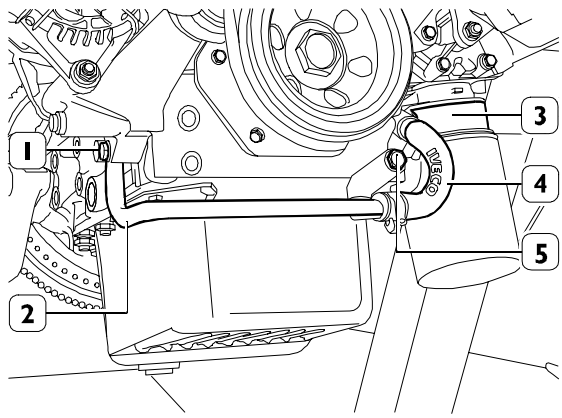

62859

Connect to the heat exchanger (3) the pipe (4) including pipe (1) and fasten the latter to the bedplate by means of screws (1 and 5).

Figure 222

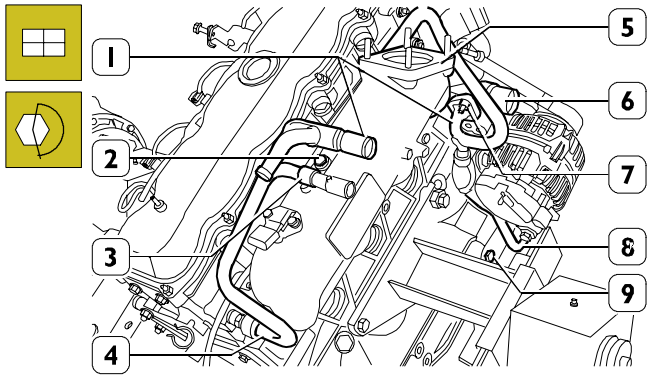

52163

Secure the pipe (8) to the crankcase base with the screw (9). With the nuts (7), secure the pipe (1) to the water pump (6). Connect the pipe (4) to the fitting of the cylinder head. Using the bracket (3), constrain the pipes (1 - 4) to the intake manifold (5), tightening the screw (2) to the required torque.

Figure 223

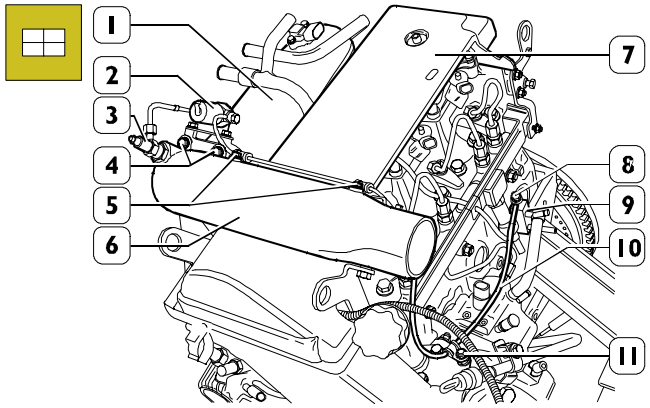

62855

Refit the soundproof cover (7). Refit air duct (6) including: solenoid valve (2), glow plug (3) and pipe (1) to intake manifold (1) and tighten nuts (4) to the required torque. Use connection (8) to connect pipe (10) to connection (9) and secure pipe (10) clamps with screws (5) and nut (11).

Connect the electrical connections of the engine cable, if any, to injectors (and refit the side cover), to air pressure and temperature sensor, to rail pressure sensor, to 3rd pumping element cut-out device, to engine rpm sensor, to revs. sensor and to thermostat box temperature sensor.

Reconnect the cooling fan to the electromagnetic joint. Apply lifting rig 99360549 to engine lifting hooks and hitch the lifting rig to the hoist, then remove engine from the rotary stand. Remove brackets 99361029.

Figure 224

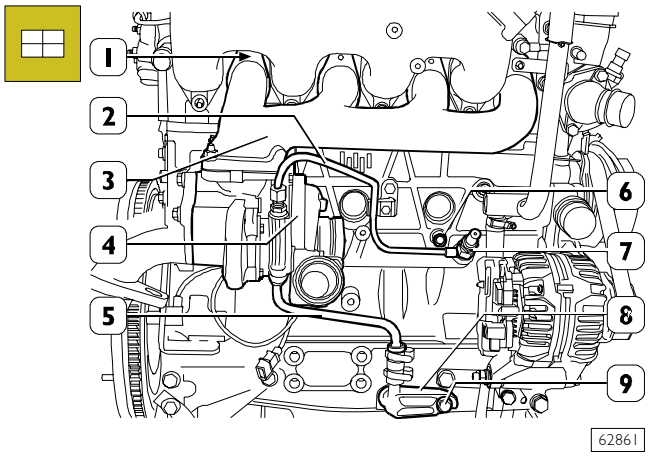

Complete engine assembly.
Place new gaskets (1) on the cylinder head and fit the exhaust manifold (3) complete with turbocharger (4) and oil pipes (2 - 5).
Secure the fitting (8) to the crankcase base with the screw (9).
Secure the pipe (2) to the crankcase with the screw and with the fitting (7) complete with the oil pressure transmitter.
Screw down the threaded plug (6).

Figure 225

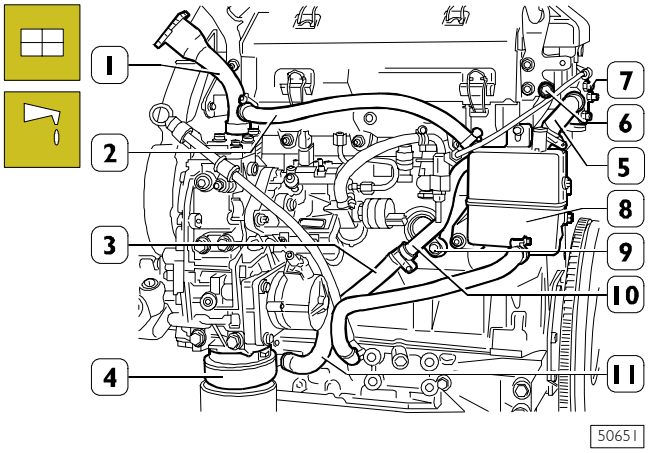

Fit the oil vapour condenser (8) complete with pipes (2 - 11).
Connect the pipe (2) to the fillpipe (1). Connect the pipe (11) to the crankcase fitting.
Connect the pipe (5) to the side cover (7).
Connect the pipe (3) to the heat exchanger (4).
Secure the pipe (10), with the screw (9), to the crankcase and, with the screw (6), to the cylinder head.
Fill the engine with the required amount and grade of lubricating oil.

764264 Timing system speed sensor
764266 Engine speed sensor

Figure 226

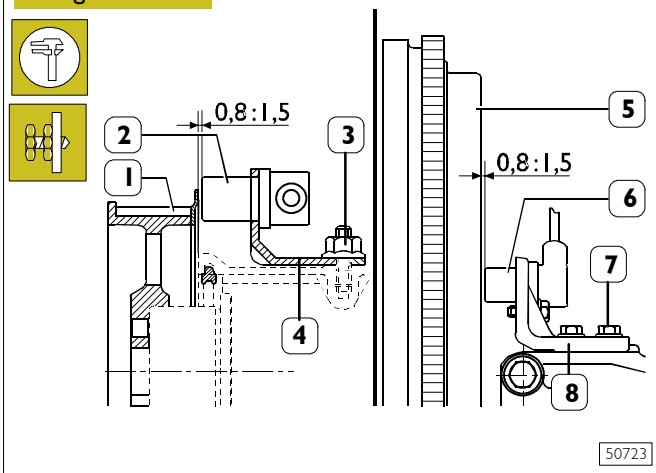

Check the sensor gap. It must be:

- ❑ 0.8 ÷ 1.5 mm, between the camshaft pulley (1) and the sensor (2).

If you find a different value, loosen the nut (3) and act on the mounting (4).

- ❑ 0.8 ÷ 1.5 mm, between the engine flywheel (5) and the sensor (6).

If you find different values, loosen the screws (7) and act on the mounting (8).

SUPERCHARGING

Figure 227

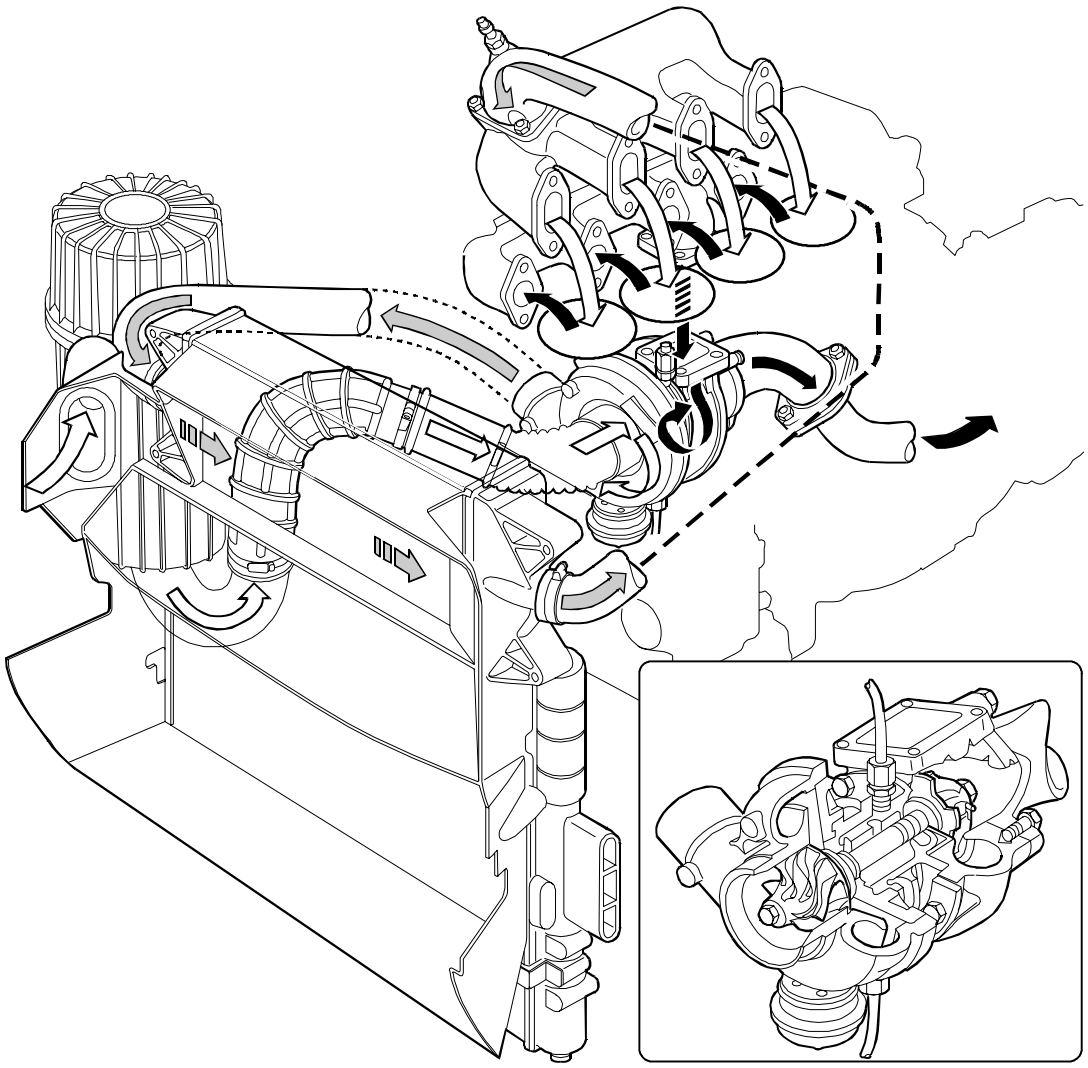

52174

TURBOCHARGING DIAGRAM FOR ENGINES 8140.43.B/R/S

Description

The turbocharging system comprises an air filter, turbocharger and the intercooler.
The air filter is the dry type comprising a filtering cartridge that can be periodically replaced.
The function of the turbocharger is to use the energy of the engine's exhaust gas to send pressurized air to the cylinders.

The intercooler comprises a radiator fitted onto the engine coolant radiator and its function is to lower the temperature of the air leaving the turbocharger to send it to the cylinders.

542410 Turbocharger type KKK K03-2076-CCA 6.68 MITSUBISHI TD 04

The turbocharger fitted on the engines 8140.43.B/R/S is the type with the pressure relief valve.
It is basically composed of:

- a central body housing a shaft supported by bushings at whose opposite ends are fitted the turbine rotor and the compressor rotor;
- a turbine body and a compressor body fitted on the end of the central body;
- an overpressure relief valve fitted on the turbine body. Its function is to choke the exhaust gas outlet, sending a portion of it straight into the exhaust pipe when the turbocharging pressure downstream from the compressor reaches the setting.

REPAIRS

On finding irregular operation of the engine due to the turbocharging system, before checking the turbocharger, it is wise to check the efficiency of the seals and the fastening of the coupling sleeves, checking moreover there are no blockages in the intake sleeves, air filter or radiators. If the turbocharger damage is due to a lack of lubrication, check that the oilways are neither burst nor clogged, in which case change them or remove the trouble.

54249 PRESSURE RELIEF VALVE

Checking and adjusting the pressure relief valve

The following descriptions and illustrations refer to checking a KKK-type turbocharger that, by analogy, unless otherwise stated, hold for the MITSUBISHI type too.

Figure 228

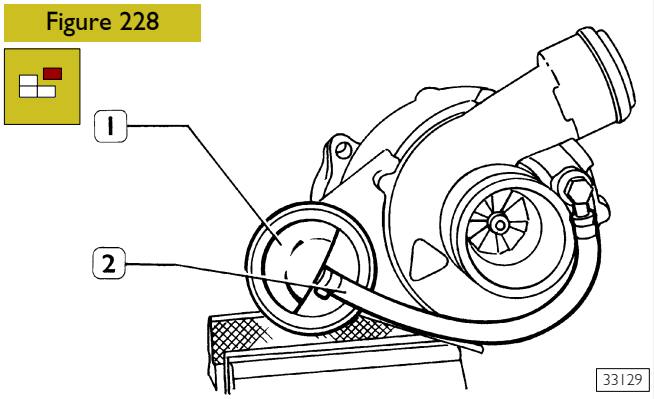

Cover the inlets and outlets of the air, exhaust gas and lubricating oil.
Thoroughly clean the outside of the turbocharger using anticorrosive and antioxidant fluid.
Disconnect the pipe (2) from the union of the pressure relief valve (1) and fit onto it the pipe of appliance 99367121 (1, Figure 229).

Figure 229

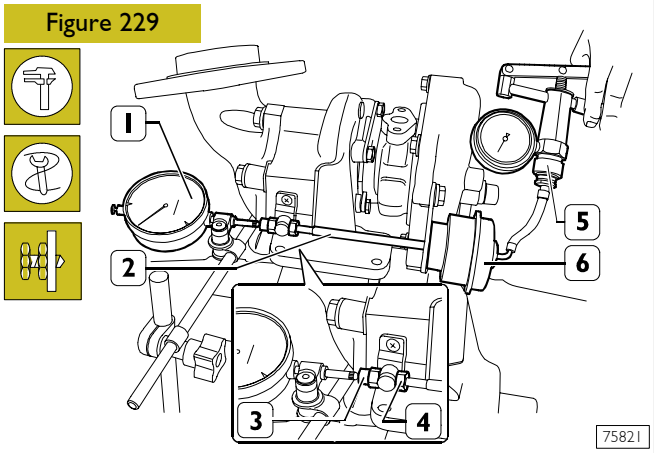

Rest the tip of the dial gauge (1) with a magnetic base on the end of the tie rod (2) and reset it.
Using appliance 99367121 (5), introduce compressed air into the valve body (6) at the prescribed pressure and check this value stays constant throughout the check; if it does not, change the valve.
In the above conditions, the tie rod must have made the prescribed travel.
If you find a different value for the KKK type, take off the clip and turn the nuts (3 and 4) appropriately.

Figure 230

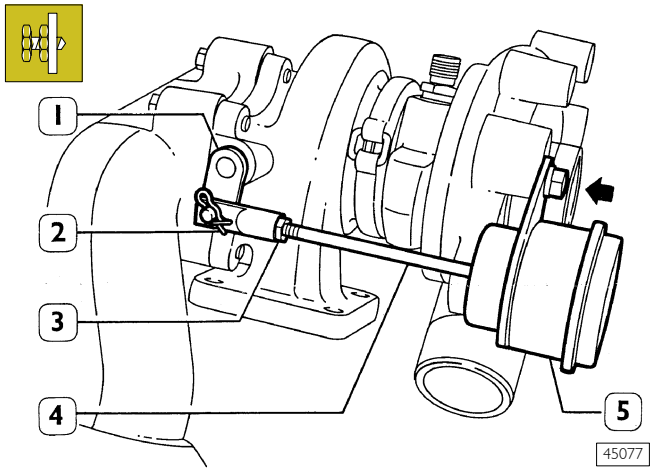

For the MITSUBISHI type, loosen the nut (3) and turn the tie rod (4) appropriately.

Changing the pressure relief valve

For MITSUBISHI turbochargers, it is enough to remove the clip (2) fixing the tie rod to the lever (1) and detach the valve (5) from the turbocharger by taking out the fixing screws (⇒).
Fit the new valve by carrying out the operations for removal in reverse order and adjust the travel of the tie rod as described under the relevant heading.

Figure 231

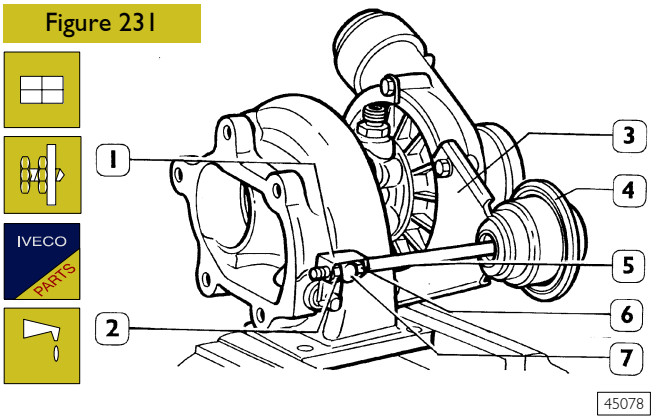

For the KKK turbocharger, proceed as follows:
Take off the clip (1), remove the nut (2). Detach the bracket (3) supporting the relief valve (4) from the turbocharger.
Fit the new valve by carrying out the operations for removal in reverse order and adjust it as follows:
Screw the nut (6) onto the stem (5) of the valve down to the bottom of the thread; mount the lever (7) on the valve stem.
Using appliance 99367121 (5, Figure 229) introduce compressed air into the valve (4) at the prescribed pressure; in this condition, screw down the nut (2) until the butterfly valve governed by the lever (7) goes onto the stop in its seat.
Unscrew the nut (6) to bring it into contact with the lever (7) and at the same time lock the nuts (2 and 6).
Adjust the pressure relief valve as described under the relevant heading.
Afterwards, paint the nuts (2 and 6) with safety paint and fit the clip onto them and connect the pipe (2, Figure 228) to the valve (4), securing it with a new clamp.

Before fitting the turbocharger onto the engine, it is necessary to fill the central body with engine lubricating oil.

542410 GARRET GT 2256 T variable geometry turbosupercharger (engine 8140.43N)

General

The variable geometry turbosupercharger consists of the following:

- centrifugal supercharger (1);
- turbine (2);
- set of mobile blades (3);
- mobile blade control pneumatic actuator (4), vacuum controlled by proportional solenoid valve controlled by EDC MS6.3 ECU.

Variable geometry enables:

- to increase the speed of the exhaust gases running into the turbine at low engine rpm;
- to decrease the speed of the exhaust gases running into the turbine at high engine rpm.

To obtain the max. engine volumetric efficiency also at low rpm (with on-load engine).

Operation at low engine rpm

Figure 232

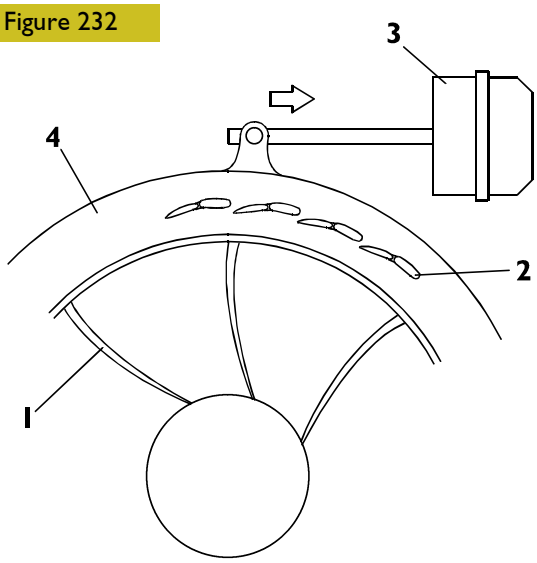

When engine is running at low speed, the exhaust gases show weak kinetic energy; under these conditions a traditional turbine shall rotate slowly, thus providing a limited booster pressure.
In the variable geometry turbine (1), the mobile blades (2) are set to max. closed position and the small through-sections between the blades increase the inlet gas speed. Higher inlet speeds involve higher tip speeds of the turbine and therefore of the turbosupercharger.
Engine speed increase results in a gradual increase of exhaust gas kinetic energy, and also in turbine (1) speed and booster pressure increase.

Figure 233

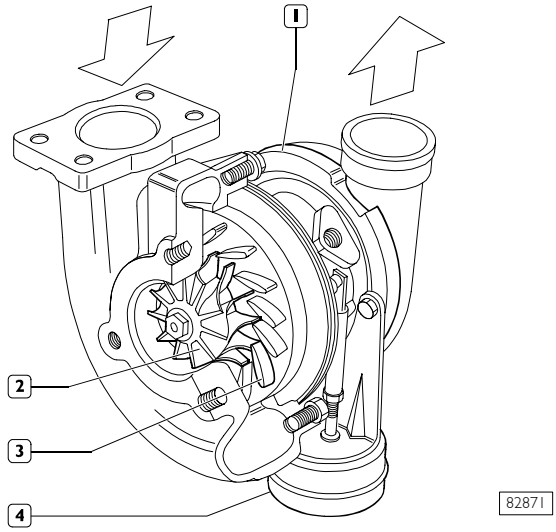

Operation at high engine rpm

Figure 234

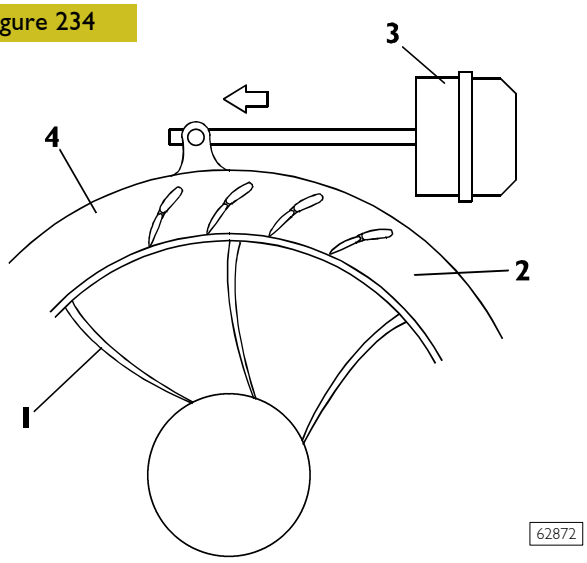

1. TURBINE - 2. MOBILE BLADES - 3. PNEUMATIC ACTUATOR - 4. REVOLVING RING

The ECU, through the actuator control solenoid valve, modulates the vacuum acting on the diaphragm, so actuator (3) controls through the tie rod, the gradual opening of the mobile blades (2) until reaching the max. open position.
Blade through-sections results larger thus producing a speed decrease in exhaust gas flow through the turbine (1) with speeds equal to or lower than those of the low rpm condition.
Turbine (1) speed is therefore adjusted to a proper value enabling suitable engine operation at high speeds.

PROPORTIONAL SOLENOID VALVE CONTROLLING TURBOCHARGER ACTUATOR

Figure 235

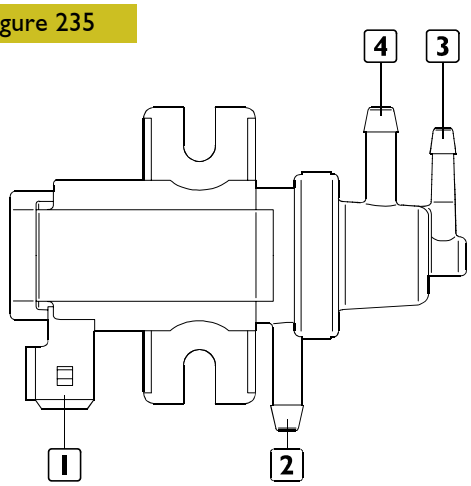

The solenoid valve modulates the low pressure controlling the turbocharger actuator, taken from the air circuit of the servo brake, according to the information exchanged between the electronic control unit and the sensors: engine speed, throttle pedal position and pressure/temperature fitted on the intake manifold.

As a result, the actuator varies the opening of the blades of the turbocharger that adjust the flow of exhaust gases.

Actuator

Figure 237

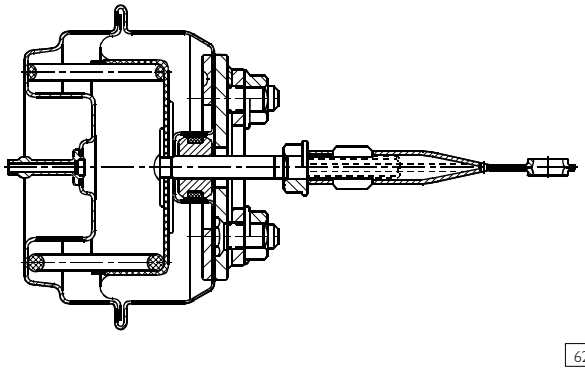

SECTION ON THE ACTUATOR

The actuator diaphragm, connected to the control rod, is governed by the low pressure on the top of the actuator.

The low pressure modulated by the proportional solenoid valve varies the movement of the diaphragm and, as a result, of the rod governing the turbine's mobile blades.

Figure 236

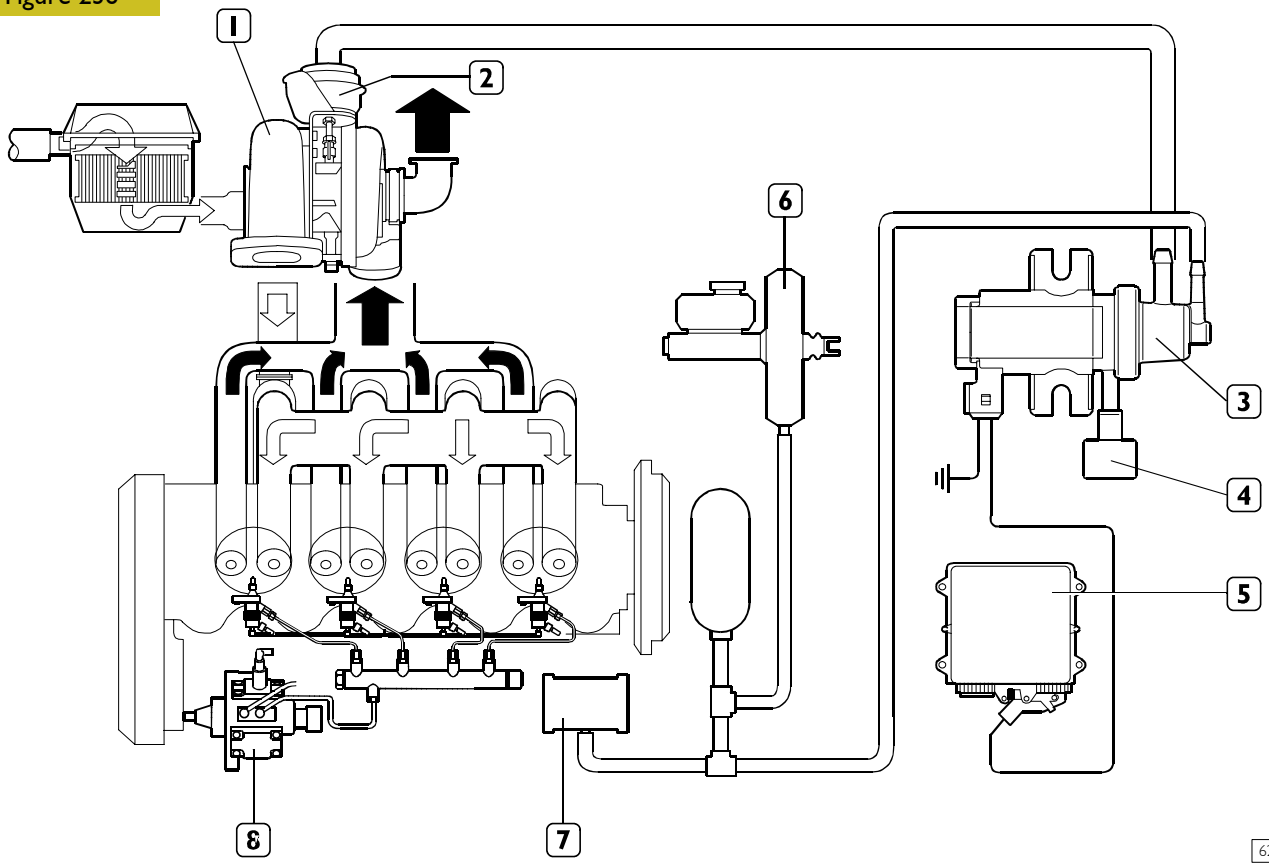

TURBOCHARGING FUNCTIONAL DIAGRAM

1. Variable geometry turbocharger - 2. Pneumatic actuator - 3. Proportional solenoid valve - 4. Air filter - 5. MS6.3 control unit - 6. Servo brake - 7. Vacuum device - 8. High-pressure pump.

REPAIRS

Checking and adjusting the actuator

Figure 238

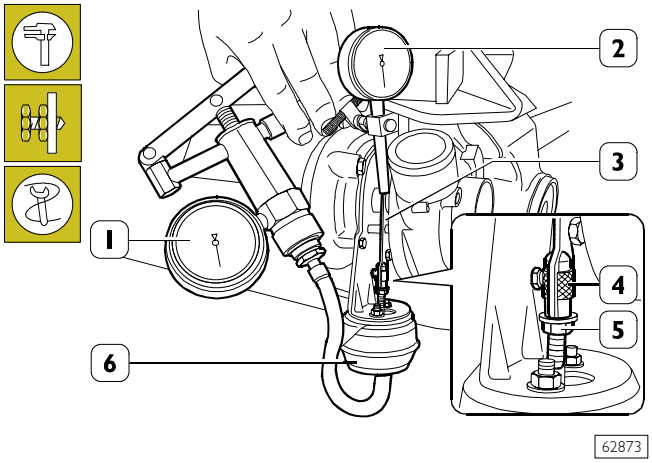

Cover air, exhaust gas and lubricant inlets and outlets.

Clean the turbosupercharger outside accurately using anticorrosive and antioxidant fluid and check the actuator (6).

Clamp the turbosupercharger in a vice.

Apply vacuometer 99367121 (1) pipe to actuator (6) hose.

Apply the magnetic base gauge (2) to exhaust gas inlet flange in the turbine.

Set gauge (2) feeler pin on tie rod (3) end and set gauge (2) to zero.

Operate the vacuum pump and check whether the tie rod (3) stroke values correspond to the vacuum values shown in the following table:

- vacuum 0 mm Hg	Fully open valve
- vacuum 150 mm Hg	Valve stroke 2.3 ÷ 2.7 mm
- vacuum 400 mm Hg	Valve stroke 9.7 ÷ 10.7 mm
- fully closed valve	Valve stroke 11 ÷ 12.4 mm

If a different value is found, loosen nut (5) and operate on the knurled ring nut (4) as required.

During the check the vacuum value shall not fall, otherwise the actuator shall be replaced.

Actuator replacement

Figure 239

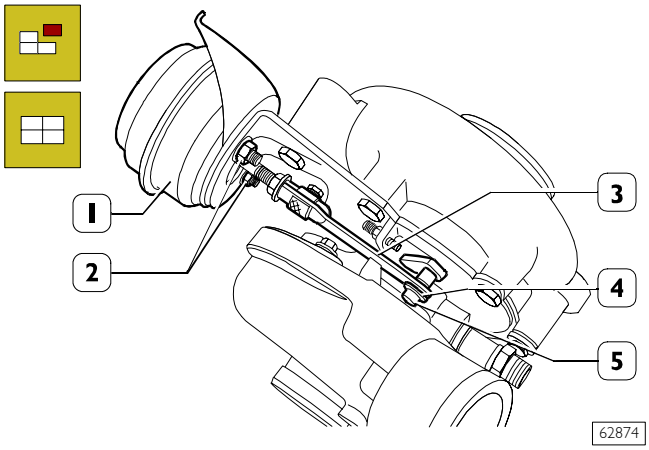

Remove the circlip (4) and withdraw the tie rod (3) from the lever (5).
Remove the nuts (2) and disconnect the actuator (1) from the supporting bracket. Fit the new actuator by reversing the removal operations and refit a new circlip (4). Tighten nuts (2) to 5.6 - 6.8 Nm torque.

Check and adjust the actuator (1), if required, as described in the relevant chapter.

Once these operations are over, paint the nut (5, Figure 238) with safety paint.

Before refitting the turbosupercharger on engine, fill the central body with engine oil.

FUEL SUPPLY
HIGH-PRESSURE ELECTRONIC INJECTION SYSTEM (COMMON RAIL MS 6.3)
General

Common Rail MS6.3 is a high-pressure electronic injection system for fast diesel engines with direct injection.
Its main features comprise:

- high injection pressures available (1350 bar);
- these pressures can be modulated between 150 bar up to the maximum operating pressure of 1350 bar, irrespective of the speed of rotation and engine load;
- capacity to operate at very high speeds (up to 6000 rpm);
- injection control precision (injection duration and advance);
- lower consumption;
- lower emissions.

The main functions of the system are basically as follows:

- checking fuel temperature;
- checking engine coolant temperature;
- checking amount of fuel injected;
- checking idling speed;
- cutting off fuel in release phase;
- checking cylinder balancing when idling;
- checking anti-sawing;
- checking smokiness at exhaust on acceleration;
- checking exhaust gas recirculation (E.G.R. if present);
- checking top speed limit;
- checking thermostart;
- checking activation of air-conditioning system (if any);
- checking auxiliary fuel pump;
- checking position of cylinders;
- checking main and pilot injection advance;
- checking closed cycle of injection pressure;
- checking turbocharging pressure;
- self-diagnosis;
- connection with immobilizer unit.

The system makes pre-injection (pilot injection) possible before T.D.C. with the advantage of decreasing the derivative of the pressure in the combustion chamber, lowering the noise level of combustion, which is typical of direct injection engines.
The control unit checks the amount of fuel injected, adjusting the line pressure and injection times.
The information the control unit processes to regulate the amount of fuel to be injected comprises:

- engine speed;
- coolant temperature;
- turbocharging pressure;
- air temperature;
- intake air quantity;
- battery voltage;
- diesel pressure;
- position of accelerator pedal.

Figure 240

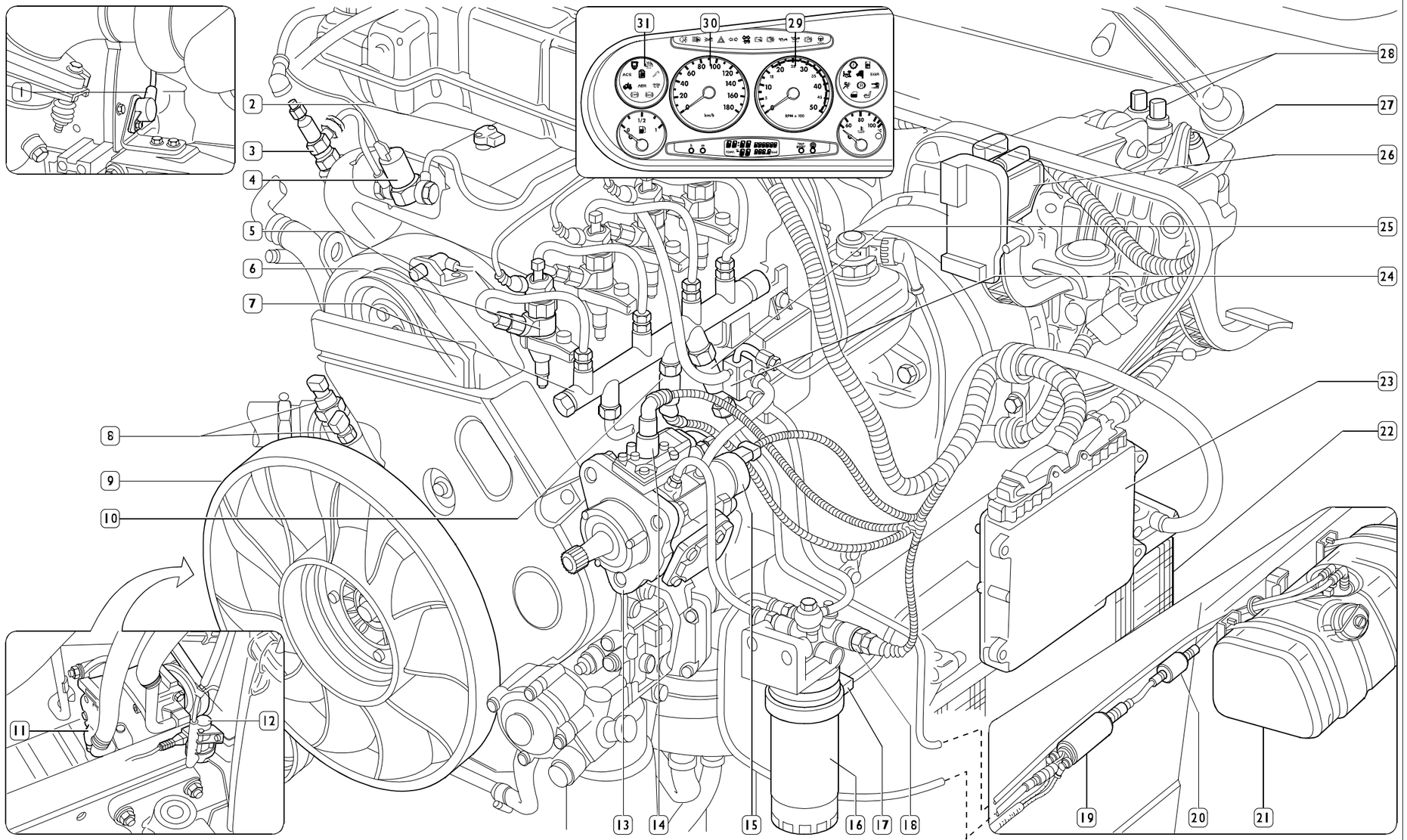

50700

HIGH-PRESSURE ELECTRONIC INJECTION SYSTEM COMPONENTS LAYOUT

1. Engine speed sensor - 2. Air temperature pressure sensor - 3. Thermostart glow plug - 4. Thermostart solenoid valve - 5. Timing phase sensor - 6. Electro-injectors - 7. Hydraulic accumulator (rail) - 8. Coolant temperature sensors - 9. Electromagnetic fan (Baruffaldi) - 10. Hydraulic accumulator (rail) fuel pressure sensor - 11. Compressor (if present) - 12. E.G.R. valve modulator (if present) - 13. High-pressure pump - 14. 3rd pumping element exclusion device - 15. Pressure regulator - 16. Fuel filter - 17. Heater - 18. Fuel temperature sensor - 19. Electric supply pump - 20. Fuel pre-filter - 21. Fuel tank - 22. Battery - 23. Control unit with atmospheric pressure sensor - 24. Fuel outlet assembly with calibrated hole - 25. Hydraulic accumulator (rail) pressure relief device - 26. Accelerator pedal sensor - 27. Clutch pedal sensor - 28. Brake pedal sensor - 29. Engine rev counter - 30. Tachograph - 31. Thermostart warning light.

SYSTEM OPERATION

Self-diagnosis - BLINK CODE

The control unit self-diagnosis system checks the signals from the sensors, comparing them with the admitted limits (see relative heading):

Immobilizer recognition

When the control unit receives the signal of the key on "MAR" it enables starting.

Checking fuel temperature

The control unit, with fuel temperature exceeding 75°C detected by fuel filter sensor, controls the pressure regulator to reduce line pressure (injection not modified). If temperature exceeds 90°C, power is reduced to 60%.

Checking engine coolant temperature

The control unit with the coolant temperature over:

- 98°C, operates the electromagnetic fan (Baruffaldi);
- 105°C, switches on the coolant temperature warning light.

Checking quantity of fuel injected

According to the signals from the sensors and the mapped values, the control unit:

- operates the pressure regulator;
- varies the "pilot" injection time to 2200 rpm;
- varies the "main" injection time.

Checking idling adjustment

The control unit processes the signals from the various sensors and regulates the amount of fuel injected:

- it operates the pressure regulator;
- it varies the injection times of the electro-injectors.

Within certain thresholds the speed takes account of the battery voltage.

Fuel cut-off in release phase

In the phase of releasing the accelerator pedal the control unit actuates the following logic elements:

- it cuts off supply to the electro-injectors;
- it partially reactivates supply to the electro-injectors before reaching idling speed;
- it operates the fuel pressure regulator.

Checking cylinder balancing on idling

According to the signals received from the sensors, the control unit controls the regularity of the torque at idling speed:

- it varies the amount of fuel injected into the single electro-injectors (injection time).

Checking regulator engine rotation (anti-sawing)

It ensures regular engine rotation at a constant rate while increasing revs.

The control unit processes the signals received from the sensors and determines the amount of fuel to be injected via:

- the pressure regulator;
- the electro-injector opening time.

Checking smokiness at exhaust on acceleration

With heavy acceleration, on the basis of the signals received from the debimeter and engine speed, the control unit determines the optimum amount of fuel to inject:

- it operates the pressure regulator;
- it varies the electro-injector injection time.

Checking exhaust gas recirculation (E.G.R. if present)

Depending on the engine load and the signal from the accelerator pedal sensor, the control unit limits the amount of air taken in, actuating partial suction of the exhaust gases.

Checking top speed limit

Depending on the number of revs, the control unit actuates two action strategies:

- at 4250 rpm, the control unit reduces fuel flow by reducing electroinjectors opening time, when 5000 rpm are exceeded it deactivates electroinjectors.

Checking rotation regularity during acceleration

Acceleration regularity is guaranteed under whatever condition by pressure regulator and electroinjectors opening time control.

Checking thermostart

In the phase of:

- starting
- after-starting

the control unit times operation of the thermostart control unit according to engine temperature.

Checking activation of air-conditioning system

The control unit operates the air-conditioning compressor:

- switching it on/off when the relative switch is pressed;
- momentarily turning it off (approximately 6 sec.) in the case of heavy acceleration or demand for full power, or if the engine coolant reaches a temperature of approx. 105°C.

Checking fuel pump

Irrespective of the speed, the control unit:

- supplies the auxiliary fuel pump with the key on MAR;
- cuts off auxiliary pump supply if the engine is not started up within a few seconds.

Checking diesel warming

It times operation of diesel warming in relation to ambient temperature.

Checking cylinder position

During each turn of the engine, the control unit recognizes which cylinder is in the power stroke and operates the injection sequence for the appropriate cylinder.

Checking pilot and main injection timing

According to the signals from the various sensors, including the absolute pressure sensor built into the control unit, the control unit determines the optimum point of injection according to internal mapping.

Checking injection pressure closed cycle

Depending on the engine load, determined by processing the signals from the various sensors, the control unit operates the regulator to obtain optimum line pressure.

Fuel supply

The fuel supply is calculated in relation to:

– accelerator pedal position
– engine speed
– quantity of air introduced.

The outcome may be corrected in relation to:

– the water temperature.

Or to avoid:

– noise
– smoke
– overloading
– overheating
– turbine over-revving.

The delivery can be modified in the case of:

– action of external devices (ABS), ABD, EDB
– serious trouble decreasing the load or stopping the engine.

After determining the mass of air introduced by measuring its volume and temperature, the control unit calculates the corresponding mass of fuel to inject into the relevant cylinder (mg per delivery) also taking into account the temperature of the diesel.
The mass of fuel calculated in this way is first converted into volume (mm^3 per delivery) and then into degrees of throw, or duration of injection.

Correcting flow rate according to water temperature

A cold engine meets with greater resistance during operation: friction is high, the oil is still very viscous, the various clearances are not yet optimized.
In addition, the injected fuel tends to condense on the metal surfaces that are still cold.
The fuel supply for a cold engine is therefore greater than for a warm one.

Correcting flow rate to avoid noise, smoke or overloading

The behaviour that could lead to this kind of trouble is well known.
The designer has therefore included special instructions in the control unit to avoid it.

De-rating

In the event of the engine overheating, injection is modified, decreasing the delivery to a varying degree, in proportion to the temperature reached by the coolant.

Adjusting turbine speed (for variable geometry turbocharger - when present)

Turbine speed is adjusted by varying its geometry and is controlled by ECU through an electric signal which powers the pilot solenoid valve of the pneumatic actuator. ECU, according to signals received from engine rpm sensor, intake manifold pressure/temperature sensor and throttle sensor, processes the feedback signal to properly modulate turbine actuator pilot solenoid valve opening.

Injection timing electronic test

The advance (start of delivery, expressed in degrees) may be different from one injection to the next, also differentiated from one cylinder to another. It is calculated, similarly to the delivery, in relation to the engine load (accelerator position, engine speed and air introduced).
The advance is appropriately corrected:

– in phases of acceleration;
– according to the water temperature.

and also to obtain:

– lower emissions, noise and overloading;
– better vehicle acceleration.

An extremely high advance is set on starting, depending on the water temperature.
Feedback from the start of delivery is supplied by the change in impedance of the injector solenoid valve.

Speed governor

The electronic speed governor has both features of governors:

– idling and top speed
– all speeds

It is stable in ranges where conventional, mechanical governors are imprecise.

Engine starting

During the first few turns of the engine, the stroke and cylinder no. 1 recognition signals (flywheel sensor and camshaft sensor) are synchronized.
The accelerator pedal signal is ignored on starting. Starting delivery is set only according to water temperature, by a special map.
When the control unit detects such speed and acceleration of the flywheel as to be able to consider the engine started up and no longer driven by the starter motor, it re-enables the accelerator pedal.

Cold starting

If even just one of the three temperature sensors (water, air or diesel) records a temperature lower than 10°C, pre-post heating is activated.
When the key makes contact the pre-heating indicator light comes on and stays on for a length of time that varies in relation to the temperature (while the heater at the intake manifold inlet warms the air), then flashes. It is now possible to start up the engine.
When the motor is running this indicator light goes out, while the heater continues to be powered for a certain length of time (variable) for post-heating.
If, with the indicator light flashing, the engine is not started up within 20 ÷ 25 seconds (inattention time), the operation is cancelled so as not to run down the batteries pointlessly.
The pre-heating curve is also variable in relation to the battery voltage.

Warm starting

If the reference temperatures all exceed 10°C, when the key makes contact the indicator light comes on for approximately 2 sec., for a short test, and then goes out. It is now possible to start up the engine.

Run up

When the key makes contact, the control unit transfers the information stored in memory when the engine was last stopped into the main memory (see After run) and makes a diagnosis of the system.

After run

Whenever the engine is switched off with the key, the control unit stays powered for a few seconds by the main relay.
This makes it possible for the microprocessor to transfer some data from the main memory (of the volatile type) to a non-volatile memory, which can be cancelled and written over (EEPROM), so as to make it available at the next start up (see Run Up).
These data basically consist of:

- various settings (engine idling adjustment, etc.);
- settings of some components;
- fault memory.

The process lasts a few seconds, typically from 2 to 7 (depending on the amount of data to save), after which the ECU sends a command to the main relay and makes it disconnect from the battery.



It is extremely important for this procedure not to be broken off, for example by switching off the engine with the battery cut-out, or by disconnecting the battery cut-out before 10 seconds have passed since switching off the engine.
If this happens, the functioning of the system is ensured, but repeated interruptions may damage the control unit.

Cut-off

This function cuts off fuel delivery when the vehicle is decelerating (accelerator pedal released).

Cylinder balancing

Individual cylinder balancing contributes to increasing comfort and handling.
This function permits individual, customized control over the delivery of fuel and the start of delivery for each cylinder, even differently from one cylinder to another, to compensate for the hydraulic tolerances of the injector.

The differences in flow (delivery specifications) between the various injectors cannot be evaluated directly by the control unit. This information is supplied by Modus reading the bar code of each injector at the time of assembly.

Synchronization search

If there is no signal from the camshaft sensor, the control unit is anyhow able to recognize the cylinders into which the fuel is to be injected.
If this occurs when the engine is already running, the combustion sequence has already been acquired, so the control unit continues with the sequence on which it has already been synchronized.
If this occurs when the machine is at a standstill, the control unit energizes a single solenoid valve. Within at most 2 turns of the crankshaft, injection will take place in that cylinder, so the control unit just needs to get synchronized on the order of combustion and to start up the engine.

Operation

A piston pump supplies diesel at a regulated pressure equal to that of injection (up to 1350 bar).

A 2-way solenoid valve taps an adequate amount of fuel from the pump delivery in order to regulate the pressure on the desired value.

The diesel under pressure is accumulated in a hydraulic accumulator (rail) that performs the function of capacity to limit the pressure ripples.

A pressure sensor is fitted on the hydraulic accumulator (rail) with the job of sending a signal (feedback) to the pressure adjustment circuit.

The electro-injectors are supplied by the rail and their operation is determined by the excitation of a fast electromagnetic actuator built into the body of each electro-injector that, by opening a gap, causes a difference in pressure, making it possible for the needle to open.

An electronic control unit, in which the control and power units for operating the electro-injectors are integrated, is enabled to control the entire injection system.

Some sensors, connected to the control unit, make it possible to determine the status of the engine and injection system, as well as the demand for power from the driver, at any moment.

This system is completed by the possibility of operating an EGR actuator and an actuator for a turbocharger equipped with a waste-gate or a turbocharger with variable geometry (if present on the engine).

Figure 241

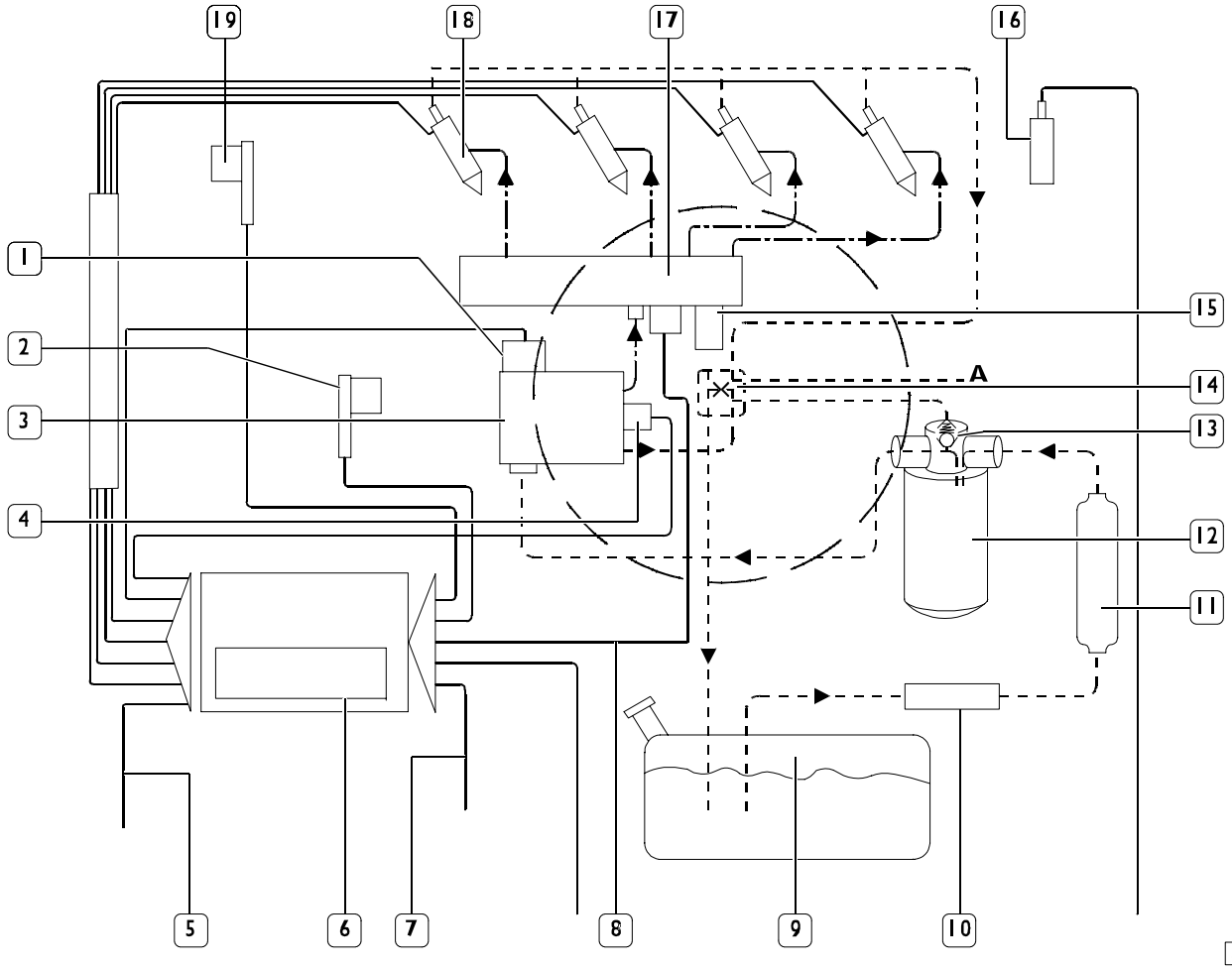

FUNCTIONAL DIAGRAM

1. 3rd pumping element exclusion device - 2. Engine speed sensor on engine flywheel - 3. High-pressure pump - 4. Pressure regulator - 5. Other actuators (thermostart, heated filter, fan control, AC control) - 6. Electronic control unit with atmospheric pressure sensor built in - 7. Other sensors (accelerator, brake, clutch, vehicle speed, water temperature, air temperature) - 8. From the manifold (rail) pressure sensor - 9. Fuel tank - 10. Pre-filter - 11. Motor pump - 12. Fuel filter - 13. Filter overpressure valve - 14. Exhaust assembly with calibrated hole - 15. Pressure relief device of hydraulic accumulator (rail) - 16. Air flow rate meter - 17. Hydraulic accumulator (rail) - 18. Electro-injectors - 19. Stroke sensor on camshaft pulley.

A	To thermostart
———	Electric circuit
- - - - - - -	Fuel at low pressure
—— · ——	Fuel at high pressure

HYDRAULIC SYSTEM

The hydraulic system is composed of:

- tank;
- pre-filter;
- electric supply pump;
- fuel filter;
- high pressure supply pump;
- pressure regulator;
- manifold (rail);
- electro-injectors;
- supply pipes and fuel recirculation.

773010 Fuel pump

This rotary positive displacement pump with integrated by-pass is mounted on the suction pipe, on the left-hand side of the chassis frame.

The fuel pump is the roller-type with positive displacement, a brush motor with energizing by permanent magnets.
The impeller turns, driven by the motor, creating volumes that shift from the inlet port to the delivery port.
These volumes are defined by the rollers that stick to the outer ring when the motor turns.
The pump has two valves, a check valve to prevent the fuel circuit from emptying (with the pump stationary) and an overpressure valve that recirculates the delivery with the inlet when pressures over 5 bar are produced.

Specifications

Delivery pressure:	2,5 bar
Flow rate:	> 155 l/h
Power supply:	13.5 V - < 5A
Coil resistance at 20°C:	28.5 Ohm

Figure 242

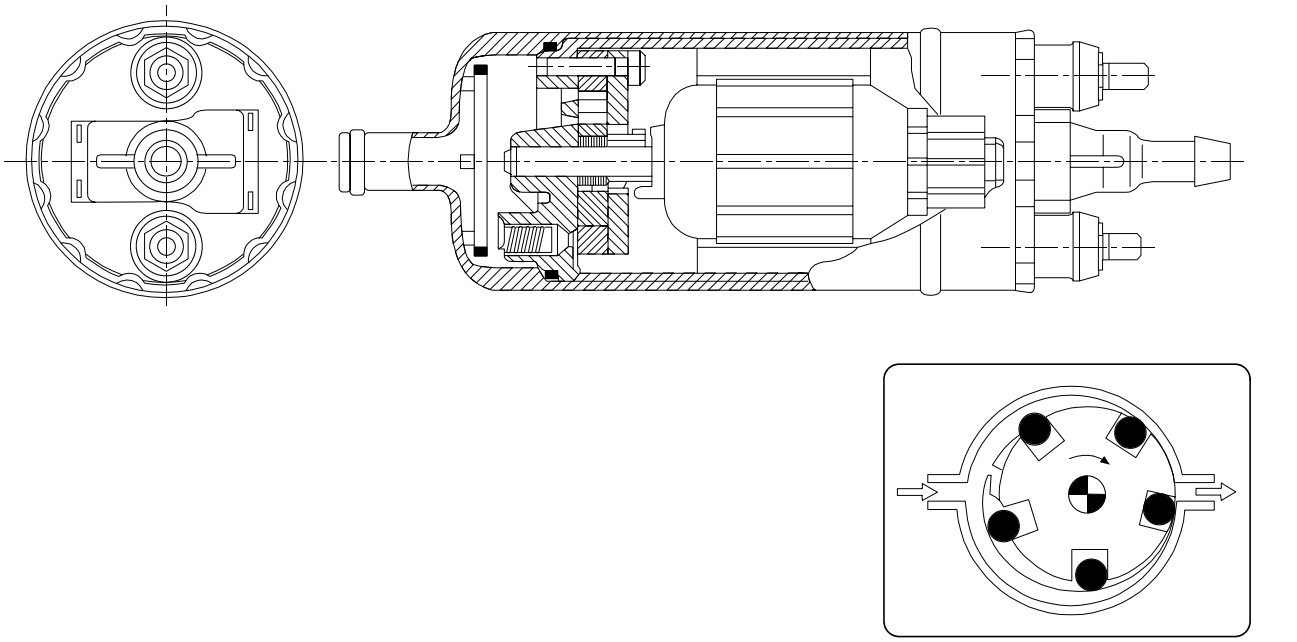

50707

CROSS-SECTION OF FUEL PUMP

542011 Fuel filter

Figure 243

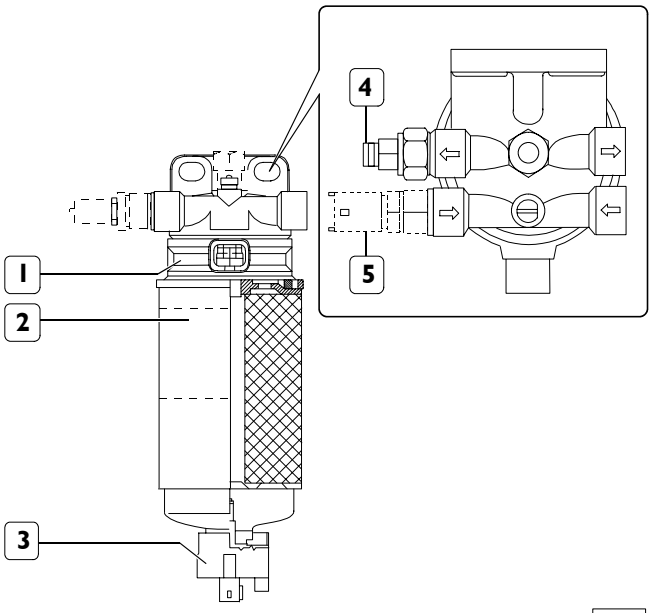

The fuel filter is mounted on a support (1) with a heater and has a water indicator (3).
The clogging indicator (4) and fuel temperature sensor (5) are mounted on the support (1). The control unit adapts the amount of fuel to inject into the cylinders according to the fuel temperature.

775010 High-pressure pump

This is the "radialjet" type with three radial pistons (total displacement 0.7 c.c.). It is operated by the timing belt without any need for timing.
Each pumping assembly is composed of:

- a piston (5) operated by a cam (2) integral with the shaft of the pump (6);
- an inlet plate valve (3);
- a delivery ball valve (4).

The high-pressure pump must be supplied by the motor pump at a pressure of at least 0.5 bar.
The maximum delivery pressure reaches 1350 bar.
The delivery pressure is controlled by a pressure adjustment solenoid valve mounted on the pump.

The high-pressure pump is lubricated and cooled by the diesel through appropriate channelling.
In addition, the pump is equipped with a 3rd pumping element exclusion device.

Specifications:

Type	with radial pumping elements
Number of pumping elements:	3
Total displacement:	0.7 cm^3
Volumetric efficiency:	> 80% at 1000 bar from 500 to 3000 rpm pump
Operating range:	up to 1350 bar
Input power:	3.2 kW at 1000 bar and 3000 rpm pump
Top speed:	3000 giri/min
Supply:	Diesel at a pressure of 0.5 bar, with a minimum flow rate of 0.5 l/min more than the flow rate absorbed by the high pressure.

Figure 244

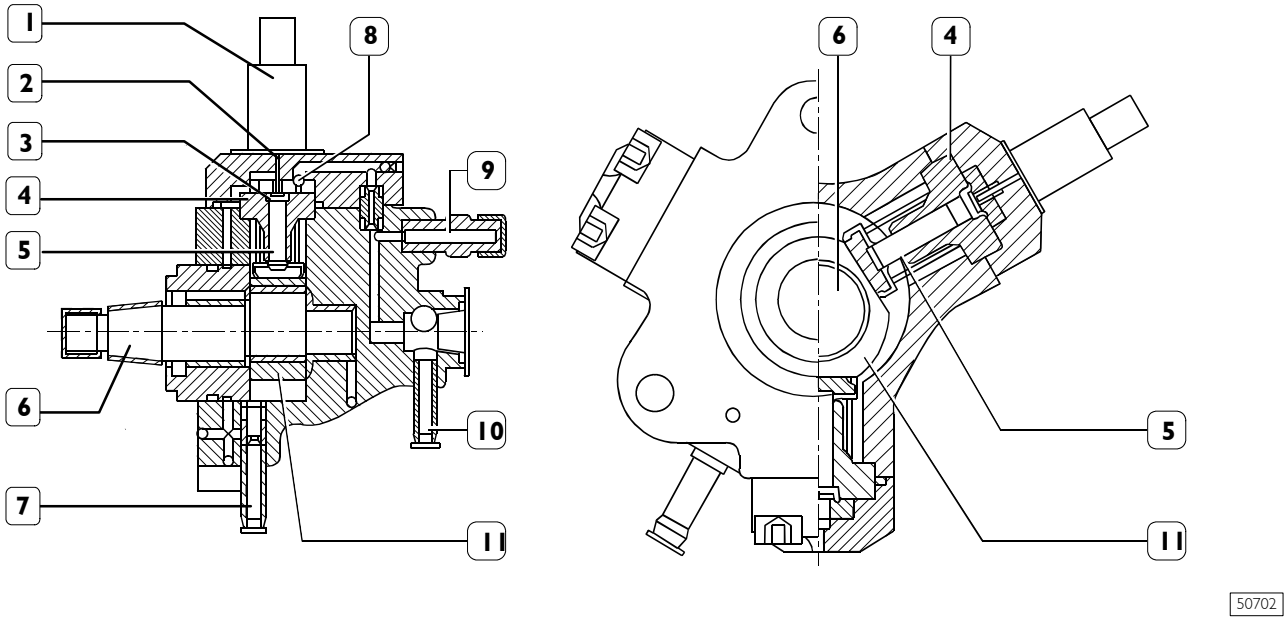

1. 3rd pumping element exclusion solenoid valve - 2. Push rod - 3. Inlet plate valve - 4. Cylinder - 5. Pumping element - 6. Pump shaft - 7. Inlet - low pressure (from diesel filter) - 8. Delivery ball valve - 9. Delivery - high pressure (rail) - 10. Delivery - low pressure (recirculation) - 11. Three-lobe cam

3rd pumping element exclusion device

The 3rd pumping element exclusion device is composed of a solenoid valve (1, Figure 244) that by means of the push rod (2, Figure 244) keeps the inlet valve (3, Figure 244) open during the delivery phase of the 3rd pumping element (5, Figure 244). It is activated by the electronic control unit when the engine, running above 4200 rpm, does not increase the power. The fuel thus discharged (approx. 1/3 of the delivery), before being put into the recirculation circuit, increases the efficiency of the high-pressure pump.

771034 Pressure control valve

Figure 245

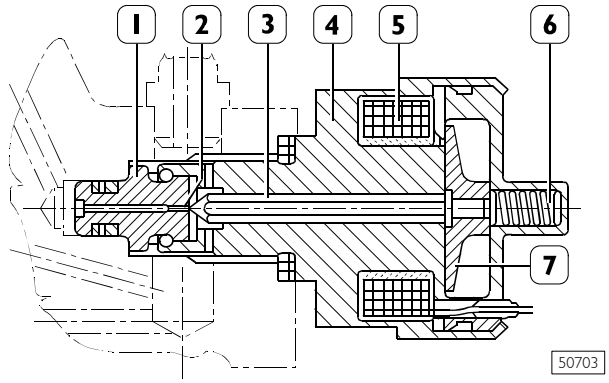

1. Valve - 2. Ball shutter - 3. Pin - 4. Body - 5. Coil - 6. Pre-loading spring - 7. Anchor

It is mounted on the high-pressure pump and operated by the electronic control unit. It regulates the supply pressure of the fuel for the electro-injectors.
The pressure regulator is mainly composed of:

- a ball shutter (2)
- a pin (3) controlling the valve (1)
- a pre-loading spring (6)
- a coil (5).

With the solenoid de-energized, the delivery pressure depends on the pre-load of the spring.
Pressure modulation is obtained by supplying the solenoid coil in PWM (Pulse Width Modulation) and closing the regulation loop by feedback from the pressure sensor, the PWM signal has a carrier of 1000 Hz and the duty cycle can be varied via software from 1% to 95%.

774510 Hydraulic accumulator (rail)

For engine 8140.43S only.
Since engine No. 3089322, a rail with the same configuration but without flow limiters and pressure relief valve has been mounted. Component description given in the following pages stands valid for engines up to this serial No.

Figure 246

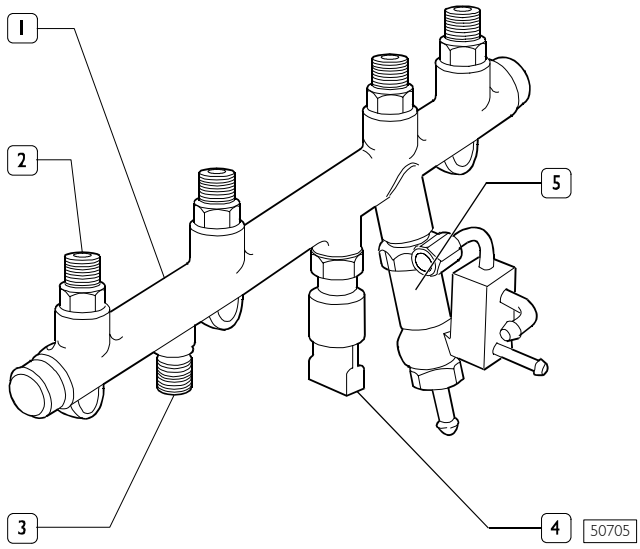

The hydraulic accumulator is mounted on the cylinder head on the opposite side to the intake.
With its volume of approximately 29 cm^3 dampens the pressure ripples of the fuel due to:

- the operation of the high-pressure pump
- the opening of the electro-injectors.

The flow limiters (2) are mounted on the top of the hydraulic accumulator (1).
The fuel pressure sensor (4) and pressure relief valve (5) are mounted on the bottom.

774512 Flow limiters

Figure 247

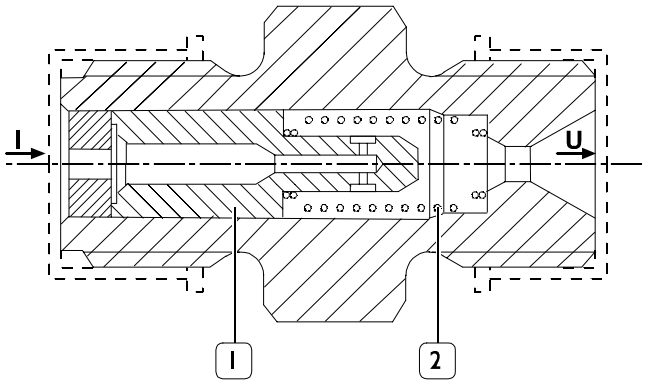

These ensure engine operation protecting the vehicle against the risk of fire in the event of fuel leakage: internal (electro-injector jet jammed open) or external (pipe fittings, loose or damaged electro-injectors under high pressure).
Under regular conditions, piston (1) is kept in open position by spring (2) and fuel pressure that, due to section difference between piston (1) internal and external surface operates highly on the latter one. When there is high pressure loss at limiter outlets, inlet pressure prevails and overcoming spring (2) reaction moves piston (1), closing fuel outlet U.

774511 Pressure relief valve

Figure 248

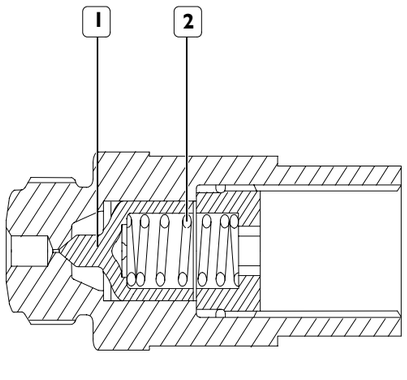

When the pressure of the fuel exceeds the setting of the pressure relief valve (1550 bar) it overcomes the reaction of the spring (2) and, by shifting the plunger (1), discharges the fuel into the low pressure - recovery circuit.

Figure 249

542025 542026 Fuel recirculation and supply system

The supply system is divided into a low-pressure circuit and a high-pressure circuit.
The low-pressure circuit comprises: pre-filter pipes, motor pump, fuel filter, fuel outlets, recirculation pipes, thermostart solenoid valve and thermostart glow plug.
The excess fuel of the high-pressure pump is partly used for lubricating and cooling the pump and with the excess fuel from the electro-injectors supplies the thermostart.
The excess fuel from the hydraulic components flow into the outlets.
The union fixing the outlet coupling and the pressure relief valve of the hydraulic accumulator contains a calibrated hole whose purpose is to keep an overpressure of 0.5 bar in the starter heater circuit.
The system does not require air bleeding.
The low pressure supply pipes, except for the recirculation pipes, are fast coupling ones.

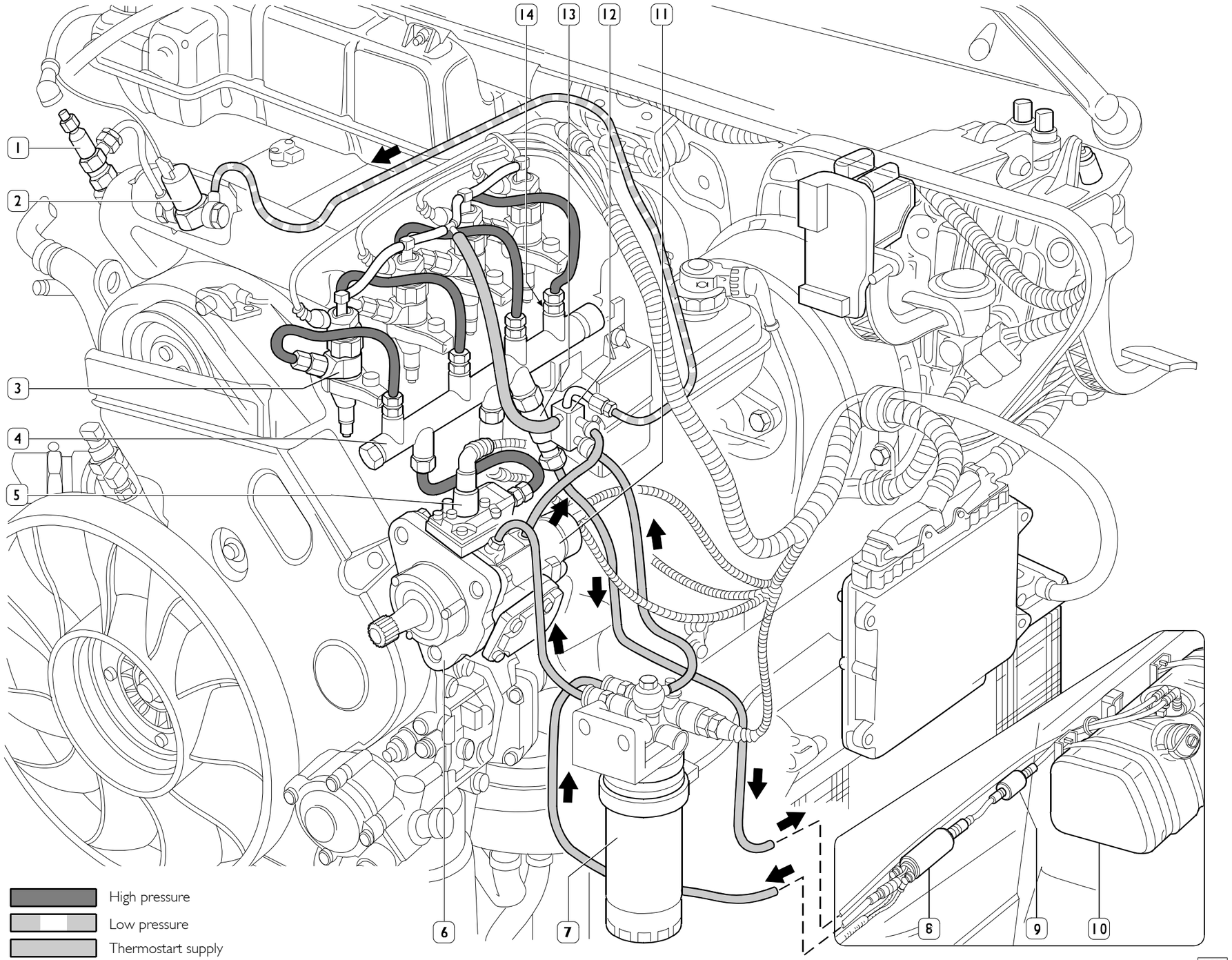

FUEL SUPPLY AND RECIRCULATION SYSTEM DIAGRAM

1. Thermostart glow plug - 2. Thermostart solenoid valve - 3. Electro-injector - 4. Hydraulic accumulator (rail) - 5. 3rd pumping element exclusion solenoid valve - 6. High-pressure pump - 7. Fuel filter - 8. Motor pump - 9. Pre-filter - 10. Tank - 11. Pressure control valve - 12. Fitting - 13. Pressure relief valve - 14. Flow limiters.

775010 ELECTRO-INJECTORS

Figure 250

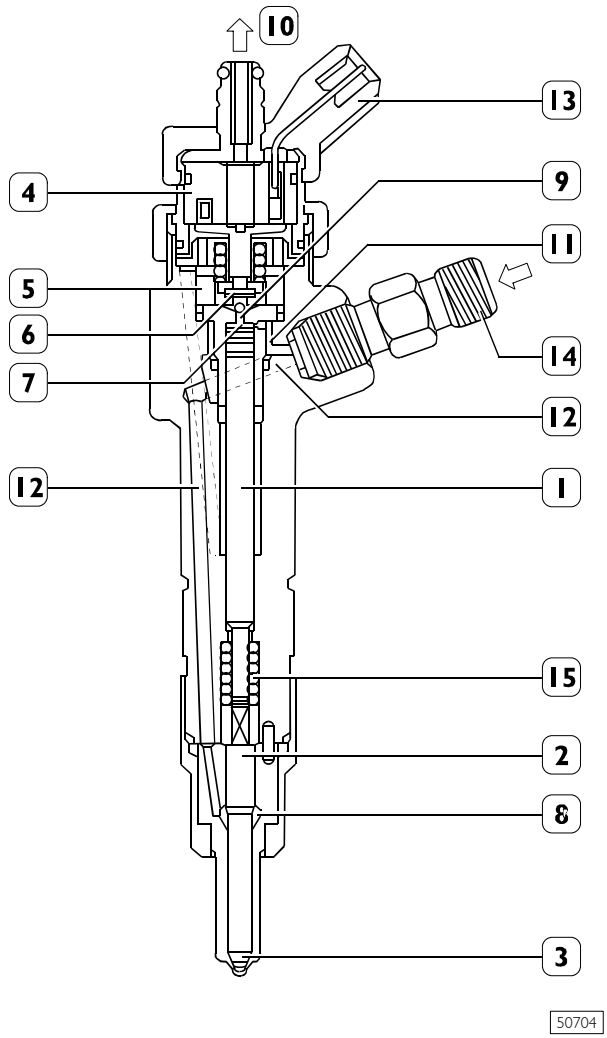

1. Pressure rod - 2. Pin - 3. Nozzle - 4. Coil - 5. Pilot valve - 6. Ball shutter - 7. Control area - 8. Supply volume - 9. Control pipe - 10. Low-pressure fuel return - 11. Control pipe - 12. Supply pipe - 13. Electrical connection - 14. High-pressure fuel inlet fitting - 15. Spring

The electro-injectors have high-pressure supply (up to 1350 bar) and recirculation at atmospheric pressure, necessary for the diesel used to operate the pilot valve.
The temperature of the diesel put back into circulation by the electro-injector can get very high (approximately 120°C).
The head of the electro-injector has a fitting for the electrical connector.
They are mounted on the cylinder head and operated by the injection control unit.
The electro-injector can be divided into two parts:

– actuator/jet composed of pressure rod (1), pin (2) and nozzle (3)
– control solenoid valve composed of coil (4) and pilot valve (5).

Operation

Electro-injector operation can be broken down into three phases:

– "rest position"

The coil (4) is de-energized and the shutter (6) is in its closed position preventing fuel from entering the cylinder Fc > Fa (Fc: due to the line pressure acting on the control area 7 of the rod 1; Fa: due to the line pressure acting in the supply volume 8).

– "start of injection"

The coil (4) is energized and causes the shutter (6) to rise.
The fuel of the control volume (9) flows off towards the return manifold (10) causing a drop in pressure in the control area (7).
At the same time, the line pressure through the supply pipe (12) applies a force Fa > Fc in the supply volume (8) causing the pin (2) to rise and consequently introduce fuel into the cylinders.

– "end of injection"

The coil (4) is de-energized and makes the shutter (6) return to its closed position. This recreates such a balance in the forces as to make the pin (2) return to its closed position and consequently end injection.

Injector level

The injector level is the set of characteristics of the amount of fuel injected in relation to the duration of the electrical signal at different pressures of injection. Accurate knowledge of these characteristics is of fundamental importance in determining the necessary electrical signal to inject the desired quantity of fuel.

Experimental measurements

The injector level can be measured:

– on the injector test bench;
– on the engine on the bench.

In both cases an injection pressure is established and the injectors are actuated (in the case of the test bench it is also possible to measure one injector at a time) with an electrical signal of fixed frequency (NG) and duration (ET).
On the injector test bench, the injected quantity is measured by directly accumulating, for a set time, the fuel in graduated burettes, then dividing the accumulated quantity by the number of injections.
On the engine on the bench, the injected quantity (QCARB) is measured indirectly by the consumption of fuel, generally measured with a gravimeter and expressed in kg/h. The measurement should be made for a sufficiently long time so as to average out errors.
However, it is necessary that throughout the measurement the speed of the engine and the injection pressure remain constant. In addition, all recirculation (pump, pressure regulator, injectors) must be put back into the circuit downstream from the meter so the measurement is not changed.

The quantity injected by each injector in each cycle is therefore:

where $$Q_c = C_n \cdot \frac{1}{60} \cdot \frac{1}{eNG} \cdot \frac{1}{8} \cdot 10^6$$

Qc injected quantity in mm^2/cycle/cylinder
Cn hourly consumption in kg/h
NG speed in rpm
δ fuel density in kg/dm^3
($\delta_{gasolio}$ = 0.835 kg/dm^3).

while

with $$e = \frac{N_c}{N_t} \cdot 2$$

N_c number of cylinders
N_t number of strokes (2 or 4)

It may immediately be seen how in the case of the test bench the delivery is measured for each single injector, whereas with the engine on the bench the delivery is averaged over the number of injectors. In this last case, it is therefore not known whether there are differences between the injectors. It is therefore useful to measure the temperature of the exhaust gas of each cylinder, a fairly reliable index of the torque delivered by each single cylinder and therefore of the amount of fuel introduced with each cycle. On the basis of these measurements it is possible to tell whether the injectors have a similar behaviour to one another.
To do this it is necessary to have thermocouples or thermometers to be placed in contact with each exhaust manifold outlet, in the area close to the cylinder head fixing flange.

ELECTRIC/ELECTRONIC COMPONENTS

766161 Electronic control unit MS6.3

Figure 251

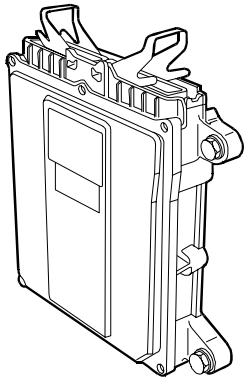

50708

The control unit is a "flash EPROM" and so it can be reprogrammed from outside without changing the hardware. The injection control unit has the absolute pressure sensor built in to further improve the control of the injection system. The control unit is mounted on the left-hand side of the engine bay and is connected to the vehicle's wiring harness by two 43-pin connectors:

– connector **A** for the components on the engine
– connector **B** for the components on the vehicle

In addition to handling the operation of the system described under the relevant heading, the electronic control unit is interfaced with the other electronic systems on the vehicles such as ABS - ABD - EBD cruise control, speed limiting device, immobilizer (IVECO CODE).

SENSORS

Engine speed sensor

This is an inductive sensor and is positioned on the flywheel. It generates signals obtained from lines of magnetic flux that close through holes in the flywheel. There are 58 holes.
The electronic control unit uses this signal to measure the speed of rotation of the engine, its angular position and to operate the electronic rev counter.
If this signal fails the rev counter will not work.

Camshaft timing sensor

This is an inductive sensor positioned on the camshaft pulley. It generates signals obtained from lines of magnetic flux that close through a notch in the pulley.
The signal generated by this sensor is used by the electronic control unit as a redundant signal to measure the different engine speeds.

772655 Air temperature and pressure sensor

Positioned on the intake manifold, it measures the pressure of the turbocharging air introduced into the intake manifold.
This value, together with that of the air temperature sensor, makes it possible for the electronic control unit to calculate the exact quantity of air introduced into the cylinders so as to operate the injectors adjusting the fuel delivery, limiting harmful emissions, improving consumption and performance.
The sensor contains an electronic temperature correction circuit to optimize the pressure measurement in relation to the temperature of the intake air.

772656 Fuel temperature sensor

Integrated in the fuel filter, it measures the fuel temperature and transmits it to the electronic control unit.
When the fuel temperature is too high (ambient temperature, engine at full load and tank in reserve), correct lubrication of the high-pressure pump is no longer assured. On the basis of the values received, the control unit determines the density and volume of the fuel, correcting the delivery limiting engine performance.

774511 Fuel pressure sensor

This is mounted in the middle of the hydraulic accumulator (rail) and it has the task of providing feedback for the injection control unit to:

– adjust injection pressure
– adjust the duration of injection.

766161 Atmospheric pressure sensor

This is integrated in the electronic control unit. It provides a criterion of correction for the measurement of the air flow rate and to calculate the reference air flow rate to check the EGR.

764254 Engine coolant temperature sensor

This provides the control unit with an index of the thermal status of the engine in order to determine corrections for the fuel delivery, injection pressure, EGR injection advance when starting cold (if mounted) and Warm-Up.

505910 Throttle pedal position sensor

The accelerator pedal position sensor provides the control unit with a voltage value in proportion to the angle of operation of the pedal determining fuel delivery.

772641 Clutch pedal position sensor

Mounted on the pedal board, it provides the control unit with a positive signal when the clutch is engaged (pedal released). Every time the clutch is disengaged to change gear, the control unit fails to receive this signal and deactivates the Cruise Control function.

772642 Brake pedal position sensor

There are two of these sensors mounted on the pedal board. With the brake pedal released, they provide the control unit with a positive signal that is used to detect brake operation so as to deactivate the Cruise Control function and stop delivery of fuel.
In addition, a sensor switches on the brake lights.

764261 Vehicle speed sensor

This sensor, mounted on the gearbox by the drive output shaft, transmits the vehicle speed signal, through the electronic tachograph, to the control unit.

ACTUATORS

The injection system comprises three classes of actuators interlocked with the electronic control unit:

- ❑ electro-injectors (see relevant heading);
- ❑ regulators (see relevant headings) requiring PWM control (Pulse Width Modulation):
  - for pressure
  - EGR (if mounted)
  - turbocharger with variable geometry (if mounted);
- ❑ actuators with continuous ON/OFF signal to:
  - engage electromagnetic coupling for radiator cooling fan;
  - turn on/off air-conditioner compressor (if mounted);
  - Cruise Control;
  - thermostart control;
  - fuel filter heating;
  - electric supply pump.



All the power controls are made with relays located in the cab.

PWM (Pulse Width Modulation) controls

A PWM control has an active and an inactive state that alternate within a constant set length of time. During the active state the actuator control circuit is closed, which is thus powered with the control voltage; whereas, during the inactive state the circuit is open.
The duration of the two states may be varied with the condition that the sum of the two times is equal to the length of the modulation delivery.
The duration of the active state determines the duty-cycle, which is normally expressed as a percentage of the total time. Therefore, if the duration of the two active and passive states are the same, the duty-cycle is equal to 50%.
For reasons of diagnostics, the duty-cycle is limited between 1% and 99%; the control resolution is equal to 0.005% (1/20000 of the time).
The time length has been chosen taking account of the dynamic actuator response specifications.
Too low a carrier frequency could cause oscillations in the actuator, while too high a frequency would decrease control resolution.
The E.G.R. and variable geometry turbocharger (if mounted) are controlled through a vacuum modulating valve.

EXHAUST GAS RECIRCULATION SYSTEM E.G.R. (vehicles with homologation MI)

The EGR system is similar to the one made on the 8140.63 engine and covered under the specific heading.

It differs from the version on 8140.63 engines in the control performed by the EDC MS6.3 control unit and in the different settings of the modulating solenoid valve and of the pneumatic one of the EGR.

GUIDE TO TROUBLESHOOTING

INTRODUCTION

Good diagnostic is mainly obtained when using Iveco electronic diagnostic tools (Modus/IWT).

When a vehicle enters the workshop, information given by the driver shall be taken in duly consideration but the first thing to do is to connect Modus/IWT and to perform an accurate and thorough diagnostic analysis:

- failure memory reading;
- parameter reading;
- engine test;
- etc.

Print out results, specially if Help Desk assistance is required.
In this case, take into account that Help Desk can reject assistance requests based only on blink code.

The blink code is a useful instrument (vehicle stop on road, no Modus/IWT) but it shall not replace Iveco diagnostic tools since it provides just general failure information.

Another factor that favours failure solving is experience.
To remove in part the lacking of experience of repair operators on this new electronic system, (since there is no previous system to be used for reference), the following pages contain a GUIDE TO TROUBLESHOOTING drawn up by Training together with the experts that have designed and developed Common Rail MS6.3.

Take into account that "Troubleshooting" cannot replace Modus/IWT, but it is a further aid, a sort of condensed experience derived from the in-depth knowledge of the system.

"Troubleshooting" is divided into two separate sections:

- the first one, organised according to Blink Codes, concerns failures that can be directly detected by MS6.3 ECU. These failures are mainly electric - electronic;
- the second one, organised according to symptoms, describes failures that cannot be directly detected by the ECU. These failures are mainly mechanical - hydraulic.

"Troubleshooting" does not replace diagnostic through Iveco electronic diagnostic tools but is an integration to it.

1st Section
BLINK CODE

Blink code

With the key turned off, press the diagnosis button.

- Two sets of flashes of the EDC warning light with a short pause in between indicate the code number of the first error stored in memory.
- Press the button again to pass on to the next error.
- After reaching the last error, the first one is repeated.
- The list of errors contains all the errors stored in memory and not only the active ones.
- The order of presentation of the errors respects the chronological order in which they appeared.

This table gives the error codes:

To delete the list of errors from the control unit memory, follow this procedure:

- with the key turned off, press the diagnosis button;
- keeping the button pressed, turn the key on;
- keep the button pressed for 5 seconds;
- let go of the button;
- turn the key off.

Blink-Code	Warning light	Failure	Reduction level (*)
VEHICLE			
1.1	On	Vehicle speed	
1.2		(not used)	
1.3	Off	Cruise Control push buttons	
1.4	Blinking	Accelerator pedal	*
1.5	Off	Clutch switch plausibility	
1.6	On	Brake switch plausibility	
1.7	Off	Brake/accelerator plausibility	Idling
1.8	Off	Diagnostic warning light	
1.9	Off	Air conditioner	
ENGINE 1			
2.1	Blinking	Water temperature sensor	*
2.2	Off	Air temperature sensor	
2.3	On	Diesel fuel temperature sensor	
2.4	Blinking	Booster pressure sensor	*
2.5	Off	Atmospheric pressure sensor	
2.7	Blinking	Fuel electric pump	
2.8	Off	Fuel heater	
2.9	On	Fan	
ENGINE 2			
3.1	Blinking	Cylinder 1 balancing	
3.2	Blinking	Cylinder 2 balancing	
3.3	Blinking	Cylinder 3 balancing	
3.4	Blinking	Cylinder 4 balancing	
3.5	Off	Battery voltage	
3.6	Off	Glow plug warning light	
3.7	Off	Glow plug relay	
3.8	Off	Glow plug relay	
3.9	Off	Glow plug control	
VGT			
4.4	Blinking	VGT control	
4.5	On	VGT solenoid valve	

Blink-Code	Warning light	Failure	Reduction level (*)
INJECTORS			
5.1	Blinking	Cylinder 1 injector solenoid valve	
5.2	Blinking	Cylinder 2 injector solenoid valve	
5.3	Blinking	Cylinder 3 injector solenoid valve	
5.4	Blinking	Cylinder 4 injector solenoid valve	
5.7	On	Block 1 (cylinders 1-4)	
5.8	On	Block 2 (cylinders 2-3)	
ENGINE RPM			
6.1	Blinking	Flywheel sensor	*
6.2	Blinking	Timing sensor	*
6.4	Blinking	Runaway speed rate	
FUEL PRESSURE			
8.1	Blinking	Fuel pressure control	* or engine switching off
8.2	Blinking	Fuel pressure sensor	*
8.3	Blinking	Pressure limiter	
8.4	On	3rd pumping element cut-out solenoid valve	
8.5	On	EGR control	
8.6	On	EGR solenoid valve	
8.7	On	Flow meter	
8.8	Off	Air temperature sensor (flow meter)	
ECU			
9.1	Blinking	ECU error (Gate array)	* Engine switching off
9.2	On	ECU error (Eeprom)	
9.3	Blinking	Immobilzer - EDC communication	
9.4	On	Main relay	
9.5	Off	After run stopped repeatedly	
9.6	Blinking	Engine not switched off by key	
9.7	Blinking	Sensor power	* 1 or engine switching off
9.8	Blinking	ECU error (Checksum)	Impossible to start
9.9	Blinking	ECU error (Operating system)	Engine switching off

* Cases in which there is a reduction in power.

BLINK CODE	EDC WARNING LIGHT	POSSIBLE CAUSE	POSSIBLE FAILURES	RECOMMENDED TESTS OR OPERATIONS	REMARKS
1.1	On	Vehicle speed sensor – not plausible or absent signal	Speed indication on speedometer may be failing. Light defect with high speeds.	Road test with IWT–IT2000 Read parameters Check wiring, connections and involved components	If the speed value read on IWT–IT2000 is fixed although the vehicle speed is varying, there is a communication fault between sensor and ECU. Should signal be missing, Cruise Control can be activated also at low speeds (operation according to PTO parameters) since the ECU does not detect that the speed threshold discriminating between PTO and Cruise Control modes have been exceeded.
1.1	On	Vehicle speed signal (section between speedometer and ECU) shorted to positive or to ground	Faulty CRUISE CONTROL/PTO Light defect with high speeds.	Road test with IWT–IT2000 Check plausibility between speedometer indication and speed read by IWT–IT2000 Check wiring, connections between speedometer and ECU and involved components	If the speed value read on IWT–IT2000 is fixed although the vehicle speed is varying, there is a communication fault between speedometer and ECU.
1.3	Off	Non–plausibility of CRUISE CONTROL/PTO push buttons	Faulty CRUISE CONTROL/PTO	Read parameters with IWT–IT2000 to detect the faulty push button Check wiring between steering column stalk and ECU, connections and control push button	
1.4	Blinking	Accelerator pedal potentiometer shorted to positive or to ground, or excessive accelerator pedal voltage or potentiometer failure.	Power reduction. 1500 rpm accelerated idling	Read parameters with IWT–IT2000. Check wiring, connections and components	Should it be impossible to accelerate using the pedal, drive using the Cruise Control push button after disconnecting the speed sensor.

BLINK CODE	EDC WARNING LIGHT	POSSIBLE CAUSE	POSSIBLE FAILURES	RECOMMENDED TESTS OR OPERATIONS	REMARKS
1.5	Off	Clutch switch: not plausible or absent signal	Faulty CRUISE CONTROL/ PTO Or, when depressing the clutch pedal with CRUISE CONTROL/PTO on, engine comes up to peak rpm Light defect at gear shifting.	Depress completely the pedal clutch and read state parameters on IWT–IT2000. If failure persists, check wiring, connections and proper switch assembling	If check is OK, failure could be due to poor clutch activation (it is possible to shift gears without activating the switch) If the clutch signal is absent, Engine test cannot be performed.
1.6	On	Brake switches: not plausible signals between primary and secondary	Possible stop light malfunctioning. Faulty CRUISE CONTROL/ PTO	State parameters Wiring, connections, switches	Check proper pedal switch assembling (they must activate at the same time)
1.7	Off	Brake/accelerator pedal plausibility: brake and accelerator activated at the same time	Engine speed comes down to idling	Read parameters on Modus IWT–IT2000, check whether accelerator pedal potentiometer signal sets to zero when releasing, otherwise it is possible that the driver has depressed brake and accelerator at the same time.	If the brake is activated with the accelerator depressed, engine runs idle until releasing the brake to enable vehicle stop even if the accelerator pedal is locked in intermediate position. It is however possible to accelerate although the brake pedal is depressed without activating safety strategies.
1.8	Off	EDC lamp shorted or with open circuit	The EDC indicator light fails to come on when turning the key ON, or it always stays on even with the key turned OFF	Check component wiring connections	The functionality of the indicator light is of vital importance for the system's operation and integrity. Sensitize the user to verify that the indicator light works properly with every ignition (if there are no faults in memory, it has to turn on for 2 sec. and then go out).

Print 603.43.351

Base – 3rd Ed. – February 2002

BLINK CODE	EDC WARNING LIGHT	POSSIBLE CAUSE	POSSIBLE FAILURES	RECOMMENDED TESTS OR OPERATIONS	REMARKS
1.9	Off	Air–conditioning compressor control contactor coil shorted to conditioning earth or circuit open.	In case of open circuit at 8a pin, also 2.7, 2.8 and 2.9 are recorded Faulty conditioner compressor	Measurable relay parameters Check wiring, connections and relay	
2.1	Blinking	Circuit open, shorted to earth or shorted to positive of water temperature sensor, the fuel temperature is used instead	Difficult starting cold Engine cooling fan always on Power reduction (and noise since pre–injection is not effected)	Reading parameters on Modus IWT–IT2000 Checking wiring and connector of water temp. sensor, sensor replacement	The fan comes on with fuel temperature = 20 °C If the water and diesel temp. are the same, the substitution value is active.
2.1	Blinking	See 2^{S} Section: "The engine fails to start"	See 2^{S} Section: "The engine fails to start"	See 2^{S} Section: "The engine fails to start"	See 2^{S} Section: "The engine fails to start"
2.2	Off	Intake manifold air temperature sensor short to positive or to ground, or circuit open.	Light performance reduction at cold, light smoke when accelerating with warm engine, 3.9 indication at the same time and smoke at starting. Smoke at starting and when accelerating at high speed with warm engine	Read parameters on Modus IWT–IT2000. Check wiring and component.	40°C air temperature fixed substitution value is set; glow plug control as a function of air temperature not operating. Flame start is however performed if water or fuel temperature sensors indicate < 0 °C and is deactivated when reaching 0° C
2.3	On	Fuel temperature sensor short to positive or to ground, or circuit open.	If the electric failure depends on pin 30 see also 2.1 Difficult cold starting.	Read parameters on Modus IWT–IT2000. Check wiring, connections and component.	Water temperature is adopted as substitution value. Should also this signal be missing, 40 °C fixed value is adopted.

BLINK CODE	EDC WARNING LIGHT	POSSIBLE CAUSE	POSSIBLE FAILURES	RECOMMENDED TESTS OR OPERATIONS	REMARKS
2.1	Blinking	Circuit open, shorted to earth or shorted to positive of water temperature sensor, the fuel temperature is used instead	Difficult starting cold Engine cooling fan always on Power reduction (and noise since pre-injection is not effected)	Reading parameters on Modus IWT-IT2000 Checking wiring and connector of water temp. sensor, sensor replacement	The fan comes on with fuel temperature = 20 °C If the water and diesel temp. are the same, the substitution value is active.
2.1	Blinking	See 2^{s} Section: "The engine fails to start"	See 2^{s} Section: "The engine fails to start"	See 2^{s} Section: "The engine fails to start"	See 2^{s} Section: "The engine fails to start"
2.2	Off	Intake manifold air temperature sensor short to positive or to ground, or circuit open.	Light performance reduction at cold, light smoke when accelerating with warm engine, 3.9 indication at the same time and smoke at starting. Smoke at starting and when accelerating at high speed with warm engine	Read parameters on Modus IWT-IT2000. Check wiring and component.	40°C air temperature fixed substitution value is set; glow plug control as a function of air temperature not operating. Flame start is however performed if water or fuel temperature sensors indicate < 0 °C and is deactivated when reaching 0° C
2.3	On	Fuel temperature sensor short to positive or to ground, or circuit open.	If the electric failure depends on pin 30 see also 2.1 Difficult cold starting.	Read parameters on Modus IWT-IT2000. Check wiring, connections and component.	Water temperature is adopted as substitution value. Should also this signal be missing, 40 °C fixed value is adopted.

BLINK CODE	EDC WARNING LIGHT	POSSIBLE CAUSE	POSSIBLE FAILURES	RECOMMENDED TESTS OR OPERATIONS	REMARKS
2.4	Blinking	Air turbocharging pressure sensor on intake manifold shorted to earth, circuit open or shorted to positive or supplied by current exceeding the minimum or maximum limit	Puff of smoke on acceleration VGT: reduced power Smoke on acceleration	Reading parameters on Modus IWT-IT2000. Checking wiring and component	
2.5	Off	ECU built-in atmospheric pressure sensor short to ground or to positive or circuit open.	Black smoke on vehicles with EGR (not excluded in height)	Read parameters on Modus IWT-IT2000. Contact Help Desk and comply with its instructions to replace the ECU, if required	The pressure value being used as substitution value is the last valid value recorded by ECU
2.7	Blinking	Fuel motor pump contactor shorted to positive	Batteries discharge Early deterioration of the motor pump The fuel motor pump is always active even with the engine turned off	Active diagnosis with Modus-IWT-IT2000 Check the wiring, connections and component	It is possible to hear the noise of the pump turning continuously, even with the key off.
2.7	Blinking	Coil of contactor for fuel motor pump shorted to earth or with open circuit	The engine cuts out or fails to start	Active diagnosis with Modus-IWT-IT2000 Check the wiring, connections and component	

Base - 3rd Ed. - February 2002

Print 603.43.351

BLINK CODE	EDC WARNING LIGHT	POSSIBLE CAUSE	POSSIBLE FAILURES	RECOMMENDED TESTS OR OPERATIONS	REMARKS
2.7	Blinking	Fuel motor pump contactor shorted to positive	Early deterioration of the motor pump Battery discharges	Active diagnosis on status parameters with Modus-IWT-IT2000 Status parameters Check wiring, connections and component	It is possible to hear the noise of the pump turning continuously, even with the key off
2.8	Off	Fuel filter heater contactor shorted to positive – the heater is always on even with fuel temperature > 5°C	Battery discharges	Active diagnosis with Modus-IWT-IT2000 Check the wiring, connections and component	
2.9	On	Fan electromagnet shorted to positive	Increased fuel consumption	Active diagnosis with Modus-IWT-IT2000 Check the wiring, connections and component	The fan is always on (with engine running)
2.9	On	Contactor coil shorted to earth or circuit open	Overheating of the engine and consequent possible limitation on power Engine cooling fan doesn't work	Active diagnosis with Modus-IWT-IT2000 Check the wiring, connections and component	
2.9	On	Fan contactor coil shorted to positive	Increased fuel consumption Engine cooling fan always on even with engine cold	Active diagnosis with Modus-IWT-IT2000 Check the wiring, connections and component	

BLINK CODE	EDC WARNING LIGHT	POSSIBLE CAUSE	POSSIBLE FAILURES	RECOMMENDED TESTS OR OPERATIONS	REMARKS
3.1 or 3.2 or 3.3 or 3.4	Blinking	Injector unbalanced	Possible irregular rotation and smokiness. EDC indicator light blinking from idling to approximately 1300 rpm	Engine test with Modus-IWT-IT2000 Replacement of defective injector, if any	The control unit must modify the signal to the relevant injector (Cylinder Balancing) too far past the normally expected value
3.1 or 3.2 or 3.3 or 3.4	Blinking	If not linked to 5.1 - 5.2 - 5.3 - 5.4, flow-limiter intervention due to pressure loss downstream the rail towards the involved cylinder	Engine running with 3 cylinders	Check for leaks outside injector pipes or inside the injector	Do not switch off the engine since it will restart only after having removed the failure
3.5	Off	Battery voltage too low	Accelerated idling up to 1300 rpm with released pedal	Battery test with IWT-IT2000 Perform suitable checks on voltage regulator and batteries	
3.5	Off	Battery voltage too low	Engine switching off or not starting	Battery test. Check battery, terminals, wiring, alternator and voltage regulator	Engine off if battery voltage < 6,5V
3.6	Off	Starter heater indicator lamp shorted to positive or with open circuit	Indicator light always off. Cold starting difficult	Active diagnosis with Modus-IWT-IT2000 Check the wiring and component	The driver doesn't wait for pre-heating, even at low ambient temperatures, as there is no indication from the indicator light
3.6	Off	Starter heater indicator lamp shorted to earth	Starter heater indicator light always on	Active diagnosis with Modus-IWT-IT2000 Check the wiring, connections and component	Pre-heating works, but with cold starting there is no indication on when to start the engine because the lamp stays on.

BLINK CODE	EDC WARNING LIGHT	POSSIBLE CAUSE	POSSIBLE FAILURES	RECOMMENDED TESTS OR OPERATIONS	REMARKS
3.7	Off	Starter heater glow plug contactor shorted to earth	Possible destruction of the starter heater due to overheating because it is always supplied Battery discharges	Active diagnosis with Modus-IWT-IT2000 Check the wiring, connections and component	
3.8	Off	Starter heater solenoid valve contactor coil shorted to earth	3.9, the battery can quickly discharge. Cold starting difficult Smoke on starting	Active diagnosis with Modus-IWT-IT2000 Check the wiring, connections and component	The solenoid valve is always activated, the fuel passes continuously through the glow plug in the intake manifold
3.8	Off	Starter heater solenoid valve contactor coil shorted to positive or with open circuit	If shorted to positive 3.9, smoke 1.5 - 1.6 - 1.3 - 2.1 - 2.2 - 2.3 - 3.6 if the electric trouble is correlated to the common earth of the components involved Cold starting difficult	Active diagnosis of the contactor Check the wiring and component	
3.9	Off	Glow plug solenoid short to ground	Smoke, noise, fuel smell and faulty engine performance Fuel consumption increase	Active diagnostic Check wiring, connections and component.	Solenoid valve always open, with key to ON fuel flows continuously into intake manifold

Print 603.43.351

Base - 3rd Ed. - February 2002

BLINK CODE	EDC WARNING LIGHT	POSSIBLE CAUSE	POSSIBLE FAILURES	RECOMMENDED TESTS OR OPERATIONS	REMARKS
4.4	Blinking	Booster pressure too high, too low or too different from the provided value (for mechanical locking)	4.5 Possible consumption increase due to exhaust back pressure Early turbine wear Power reduction Smoke when accelerating (due to air excess or lack)	VGT test Read parameters on Modus IWT-IT2000. Check VGT mechanism movement Check VGT actuator Check wiring Check VGT pneumatic control circuit	Mechanism locked partially/completely closed or open Or VGT solenoid valve short to positive or to ground
4.5 VGT only	On	VGT actuator short to positive or to ground or circuit open	4.4 and power reduction (and noise since pre-injection is not performed) Smoke when accelerating (due to air excess or lack)	VGT test Check wiring, connections and component.	If wiring to pin 8a short to positive or open, the following are also faulty: - fan control - VGT control - 3rd pumping element cut-out - pressure regulator - EGR - conditioner compressor - fuel motor pump
5.1 5.2 5.3 5.4	Blinking	Corresponding cylinder injector shorted to positive	3.1- 3.2 -3.3 -3.4 The engine runs on 2 cylinders	Engine test Wiring - connections – electrical part of relevant injector	The engine turns only with pairs of cylinders (2 and 3 or 1 and 4) After turning off and back on again the engine turns with 3
5.1 or 5.2 or 5.3 or 5.4	Blinking	Injector electrical part short to ground or circuit open	3.1 - 3.2 - 3.3 - 3.4 Engine running with 3 cylinders	Engine test. Check wiring, connections and component.	

Base - 3rd Ed. - February 2002

Print 603.43.351

BLINK CODE	EDC WARNING LIGHT	POSSIBLE CAUSE	POSSIBLE FAILURES	RECOMMENDED TESTS OR OPERATIONS	REMARKS
5.7 or 5.8	Blinking	Power stage of cylinders 1 and 4 or 2 and 3 (in control unit) defective	3.1 - 3.2 - 3.3 - 3.4 The engine runs on 2 cylinders	Delete fault memory and try again If the error remains, call the Help Desk and follow their instructions to replace the control unit, if necessary.	It might happen if the outer casing of the control unit has been shorted with battery + (accidentally with a spanner, etc.)
6.1	Blinking	Flywheel sensor: signal missing or not plausible	Difficult starting with warm engine, starting impossible with cold engine Power reduction (and noise since pre-injection is not performed)	Read parameters on Modus IWT-IT2000. Check wiring, connections and sensor assembling	Should flywheel signal be missing, camshaft sensor signal is adopted
6.2	Blinking	Camshaft sensor: signal missing or not plausible	Difficult starting with warm engine, starting impossible with cold engine Power reduction	Check wiring, connections and sensor assembling	Should camshaft signal be not good, flywheel sensor timing signal is adopted
6.4	Off	The engine has over-revved, probably driven, or: crankshaft sensor signal (in this case, signalling error 6.1)	If the over-revving occurred when driven, no reaction perceptible by the driver (other than the indicator light blinking)	Data saved, verify the duration and frequency of the over-revving Delete the fault memory	Sensitize the driver about the correct use of the vehicle

BLINK CODE	EDC WARNING LIGHT	POSSIBLE CAUSE	POSSIBLE FAILURES	RECOMMENDED TESTS OR OPERATIONS	REMARKS
8.1	Blinking	Excessive current to regulator - injectors with blow-by at end of lifetime, leaks from pressure relief valve, regulator locked open, 3rd pumping element cut-out always powered, high pressure pump breakage, rail breakage or pipe breakage between injection pump and rail	Engine off if actual pressure is lower than a certain value with respect to target pressure. Power reduction Noise increase since pre-injection is not performed	Visually inspect absence of fuel leaks from high pressure pipes and rail. Check pressure relief valve tightness. Check wiring and regulator coil resistance. If also 8.4 is displayed or injector and pressure relief valve malfunctioning can be excluded. Check 3rd pumping element cut-out wiring and connections and replace high pressure pump if required.	If ECU detects a pressure value significantly lower than the calculated value, engine is switched off NOTE: injectors must not show blow-by with < 200.000 km covered WARNING! If failure memory is deleted, engine will not start but failure is no longer indicated For this reason, before deleting the fault memory it is advisable to print out its content.
8.1	Blinking	Pressure regulator locked closed	8.3 - 8.4 Power reduction Noise increase since pre-injection is not performed	If 8.3 blink code is not displayed, replace rail pressure sensor; otherwise check regulator resistance. Replace pump and regulator if required. If also 8.3 + 8.4 are displayed, contact Help Desk and comply with its instructions to replace the ECU, if required	
8.2	Blinking	Rail pressure sensor short to positive or to ground or circuit open	Power reduction Noise increase since pre-injection is not performed	Read parameters on Modus IWT-IT2000. Check wiring, and replace sensor	
8.3	Blinking	Pressure regulator short to ground or to positive or circuit open	8.1 and 8.4 could be present Engine switching off or not starting	Check wiring, connections and regulator. Replace high pressure pump if 8.1 - 8.3 are displayed. Replace ECU if 8.3 - 8.4 are displayed, if required.	Restarting impossible

Base - 3rd Ed. - February 2002

Print 603.43.351

BLINK CODE	EDC WARNING LIGHT	POSSIBLE CAUSE	POSSIBLE FAILURES	RECOMMENDED TESTS OR OPERATIONS	REMARKS
8.4	Off	3rd pumping element cut-out solenoid valve control short to ground or circuit open	8.1 Error in ECU memory	Active diagnostic with Engine test to check pump operation Check wiring, connections and component	3rd pumping element not cut-out when expected, pump can therefore be poor lubricated when motoring over (long downhill with warm engine and exhaust brake on over peak rpm). CAUTION NEVER RUN DOWNHILL WITH ENGINE OFF AND GEAR ENGAGED.
8.5	On	EGR monitoring: incorrect implementation of the EGR percentage calculated by the control unit	EGR is turned off Emissions not in conformity with legislation Smoke at high speed - reduced performance	Check that the EGR pneumatic valve is not jammed shut or open (or intentionally tampered with) Check that the pipe between the solenoid valve and the EGR pneumatic valve is not crushed, punctured or detached Check wiring - connectors and solenoid valve	In case of any defect with the wiring of pin 8A, the errors related to all the devices connected to this pin will be stored in memory
8.6	On	EGR solenoid valve short-circuited or with open circuit	EGR fails to work or works constantly Emissions not in conformity with legislation Smoke at high speed - reduced performance	Check the EGR solenoid valve works properly (diagnosis active with the diagnostic tool) Using a multimeter, check the integrity of the solenoid valve	In case of any defect with the wiring of the EDC connector pin 8A, the errors related to all the devices connected to this pin will be stored in memory

Print 603.43.351

Base - 3rd Ed. - February 2002

BLINK CODE	EDC WARNING LIGHT	POSSIBLE CAUSE	POSSIBLE FAILURES	RECOMMENDED TESTS OR OPERATIONS	REMARKS
8.7	Blinking	Debimeter or air flow-rate meter (EGR version only) shorted to +Batt., shorted to earth or with open circuit, on the supply or measuring circuit Airflow signal not plausible	EGR not working Power reduction Increase in noise since pre-injection is not effected	Measurable parameters Check wiring and replace flow-meter, if required Check air circuit (loss due to too low air mass, waste-gate valve operation for too high air mass found max. power and high speed), replace flow-meter	
8.8	Off	Intake air pressure sensor for EGR shorted or with open circuit	No reaction perceivable by the driver	Check the sensor and associated wiring work properly	

Base - 3rd Ed. - February 2002

Print 603.43.351

BLINK CODE	EDC WARNING LIGHT	POSSIBLE CAUSE	POSSIBLE FAILURES	RECOMMENDED TESTS OR OPERATIONS	REMARKS
9.1	Blinking	ECU internal failure First switching off after replacing with new ECU not performed through key (+15), but by disconnecting the battery positive with engine on	Engine switching off or not starting. In certain cases it could not switch off and going to power reduction level	If failure persists, contact Help Desk and comply with its instructions to replace the ECU, if required	In this case ECU cannot perform switching off diagnostic and it is impossible to restart. If ECU was already being initialised, an improper engine switching off procedure (or current cut-off from alternator with engine running) results in storing of many system failures, under ambient conditions of low battery voltage and engine speed below idling. No failure could be stored, it depends on ECU damages
9.1	Blinking	ECU internal failure	Engine could switch off without being possible to restart it Power reduction (and noise increase since pre-injection is not performed)	If failure persists, contact Help Desk and comply with its instructions to replace the ECU, if required	This can take place when ECU power is cut out not by the key No failure could be stored, it depends on ECU damages
9.2	On	Control unit EEPROM fault	The data are not saved on switching off the engine. The fault memory is lost, it is possible to read solely the current faults and not the intermittent ones The curb idle speed that may have been set with the Cruise Control is not saved	Delete fault memory If the error remains, call the Help Desk and follow their instructions to replace the control unit, if necessary	
9.3	Blinking	Communication problems with Immobilizer in short or circuit open to CAN line	Engine switching off or not starting.	Check wiring, connections and component Perform Immobilizer diagnostic	

BLINK CODE	EDC WARNING LIGHT	POSSIBLE CAUSE	POSSIBLE FAILURES	RECOMMENDED TESTS OR OPERATIONS	REMARKS
9.4	On	Main contactor fails to disconnect	3.5 battery discharges	Status parameters Check wiring, connections and component	The control unit stays supplied and the EDC indicator light on even with the key off
9.5	Off	After Run interrupted several times	Fault memory and other operational data are not correctly stored in EEPROM	Check the control unit supply wiring to find any intermittent false contacts If the wiring is in order, change the main contact	Investigate any incorrect use of the vehicle
9.6	Blinking	Failure of the internal test procedure that takes place in the control unit each time the engine stops	The engine fails to stop in the preset time when the +15 key is turned OFF	Delete the fault memory: if the error remains, in normal conditions of switching off the engine, call the Help Desk to replace the control unit, if necessary	
9.7	Blinking	ECU internal failure in sensor power circuit	1.4 - 2.4 - 8.2 and 8.7 can be displayed at the same time Power reduction (and noise increase since pre-injection is not performed)	If failure persists, contact Help Desk and comply with its instructions to replace the ECU, if required	

Base - 3rd Ed. - February 2002

Print 603.43.351

BLINK CODE	EDC WARNING LIGHT	POSSIBLE CAUSE	POSSIBLE FAILURES	RECOMMENDED TESTS OR OPERATIONS	REMARKS
9.8	Blinking	ECU software internal failure due to the attempt of tampering with ECU data-set	Engine switching off or not starting.	If failure persists, contact Help Desk and comply with its instructions to replace the ECU, if required	In certain cases engine could not be re-started now and then
9.9	Blinking	ECU software internal failure or attempt to tamper with ECU data-set	Possible short injection cut-off, indication of other failures with ambient parameters not consistent Impossible to restart engine Light defect at gear shifting	If failure persists, contact Help Desk and comply with its instructions to replace the ECU, if required	

Print 603.43.351

Base - 3rd Ed. - February 2002

2nd Section
SYMPTOMS

Main engine operating trouble:
1 – The engine fails to start or cuts out;
2 – The engine overheats;
3 – The engine lacks power;
4 – The engine produces black or dark grey smoke;
5 – The engine produces grey (tending to white) smoke;
6 – The engine produces blue smoke;
7 – The engine produces white or black smoke;
8 – The engine knocks abnormally;
9 – The engine stops;
10 – Fuel consumption too high;
11 – Oil pressure low or too high.

1 THE ENGINE FAILS TO START OR CUTS OUT

Connections to battery terminals efficient.	– NO →	Clean, check, tighten the nuts of the clamps or change them.
YES ↓		
Batteries efficient.	– NO →	Perform the checks described in the "Electrical System" Repair Manual.
YES ↓		
Starter motor efficient.	– NO →	Perform the checks described in the "Electrical System" Repair Manual.
YES ↓		
No air infiltration in the low-pressure supply circuit.	– NO →	Extend the starting procedure. Self-bleeding system.
YES ↓		
No moisture in the supply circuit.	– NO →	Eliminate the causes of infiltration. Clean the supply circuit including the tank.
YES ↓		
Fuel pre-filter efficient.	– NO →	Analyse and replace if necessary.

(continues)

Pre-post heating system efficient.	– NO →	Diagnosis with Modus – IT2000 – IWT.
YES ↓		
High-pressure pump efficient.	– NO →	Engine Test with Modus IWT – IT 2000.
YES ↓		
Injector efficient.	– NO →	Engine Test with Modus IWT – IT 2000. Check O-ring seal.
YES ↓		
Compression ratio correct.	– NO →	Overhaul the engine or limit repairs to the parts concerned (valves, rings, etc.).
YES ↓		
Motor pump efficient.	– NO →	Pump not supplied. Check wiring and fuse. Buzzing is a sign it is working.
YES ↓		
Motor pump efficient.	– NO →	Insert a pressure gauge between the motor pump and filter, with the panel on the pressure must be no less than 2 bars, otherwise change the motor pump.
YES ↓		
Low-pressure supply pipes efficient.	– NO →	Visual analysis to exclude leaks and constrictions.
YES ↓		
Fuel return pipes to tank efficient	– NO →	Visual analysis to exclude constrictions.

(continues)

Fuel filter efficient.	– NO →	Insert a pressure gauge between the filter and the high-pressure pump, with the panel on the pressure must be greater than 1.8 bars, otherwise change the filtering cartridge and repeat.
YES ↓		
Fuel filter clogging sensor efficient.	– NO →	Insert a pressure gauge between the filter and the high-pressure pump, with the panel on the pressure must be greater than 1.8 bars, otherwise change the filtering cartridge and repeat.
YES ↓		
Starter heater solenoid valve efficient.	– NO →	Plug the fuel delivery pipe and try starting again. If the engine starts, check the supply and replace the solenoid valve if necessary.
YES ↓		
Fuel return pipes to the tank upstream of the outlet assembly or outlet assembly efficient.	– NO →	Insert a pressure gauge upstream of the starter heater valve, with the panel on the pressure must be greater than 0.4 bars, otherwise search for leaks and tighten the connections properly.
YES ↓		
Fuel return pipes to the tank upstream of the recirculation outlet assembly efficient.	– NO →	Insert a pressure gauge upstream of the starter heater, with the panel on the pressure must be less than 0.9 bars, otherwise remove and clean the recirculation nozzle.
YES ↓		
By-pass valve downstream of fuel filter efficient.	– NO →	Insert a pressure gauge between the filter and the high-pressure pump, with the panel on the pressure must be greater than 1.8 bars, otherwise change the filter base and repeat.
YES ↓		
Rail overpressure valve efficient.	– NO →	If the pressure gauge inserted upstream of the high-pressure pump indicates at least 1.8 bars and the pressure gauge upstream of the starter heater valve at most 0.9 bars, check the parameters with IWT-IT2000.

(continues)

Rail overpressure valve efficient.	– NO →	If when cranking the rail pressure is less than 150 bars, remove the recirculation assembly, plug the ring connecting to the rail and inspect the seal of the overpressure valve. If there is any blow-by, change the valve. Repeat the test with IWT-IT2000.
YES ↓		
Electro-injector efficient.	– NO →	If after the above test, the rail pressure is still less than 150 bars, change the injector.
YES ↓		
High-pressure pump and shut-off valve efficient.	– NO →	If after the above tests, the rail pressure is still less than 150 bars, change the pump-regulator assembly.
YES ↓		
Engine flywheel with correct timing.	– NO →	Check the timing is correct; do the timing if necessary.
YES ↓		
Timing sensor on flywheel efficient.	– NO →	Check the sensor is in the right position. Position it correctly.
YES ↓		
EDC control unit efficient.	– NO →	Change the control unit.

2 THE ENGINE OVERHEATS

Correct coolant level.	– NO →	Check for leaks and restore the level.

(continues)

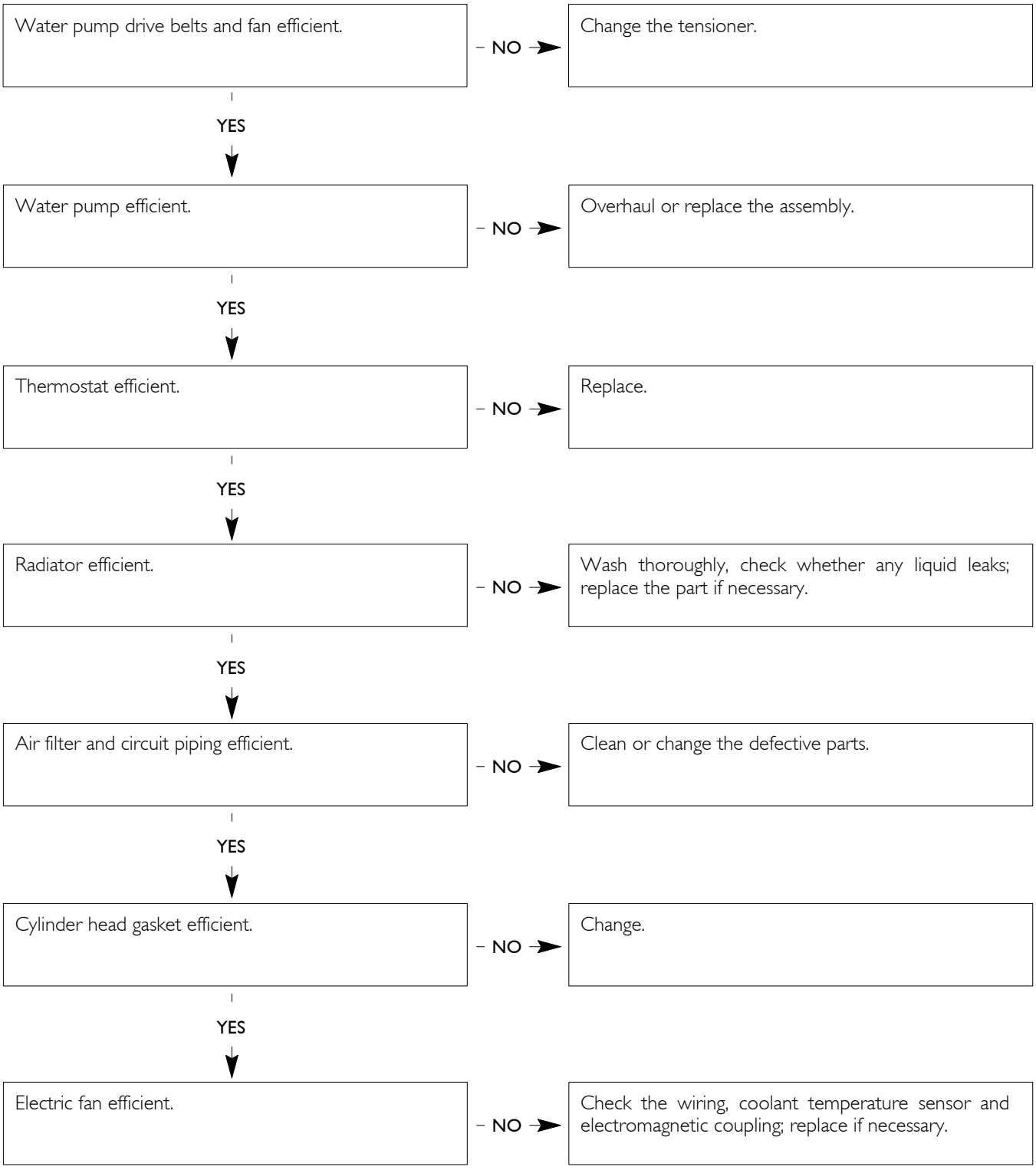
Water pump drive belts and fan efficient.
– NO →
Change the tensioner.
YES
Water pump efficient.
– NO →
Overhaul or replace the assembly.
YES
Thermostat efficient.
– NO →
Replace.
YES
Radiator efficient.
– NO →
Wash thoroughly, check whether any liquid leaks; replace the part if necessary.
YES
Air filter and circuit piping efficient.
– NO →
Clean or change the defective parts.
YES
Cylinder head gasket efficient.
– NO →
Change.
YES
Electric fan efficient.
– NO →
Check the wiring, coolant temperature sensor and electromagnetic coupling; replace if necessary.

3 THE ENGINE LACKS POWER

Fuel filters efficient.
– NO → Change, proceeding as described in the "Operation and Maintenance" booklet.

YES

High and low pressure, supply circuit efficient.
– NO → Check system coupling seal.

YES

Thermostat efficient.
– NO → Change.

YES

Fuel in tank.
– NO → Check the fuel level.

YES

Drawing element of fuel in tank efficient.
– NO → Check the priming pump and clean the drawing element of any debris.

YES

High-pressure pump efficient.
– NO → Engine Test with Modus – IWT – IT2000, replace if necessary.

YES

Injectors efficient and flow limiters (if applicable) work correctly
– NO → Engine Test with Modus – IWT – IT2000, replace if necessary.
Check O-ring seal.

(continues)

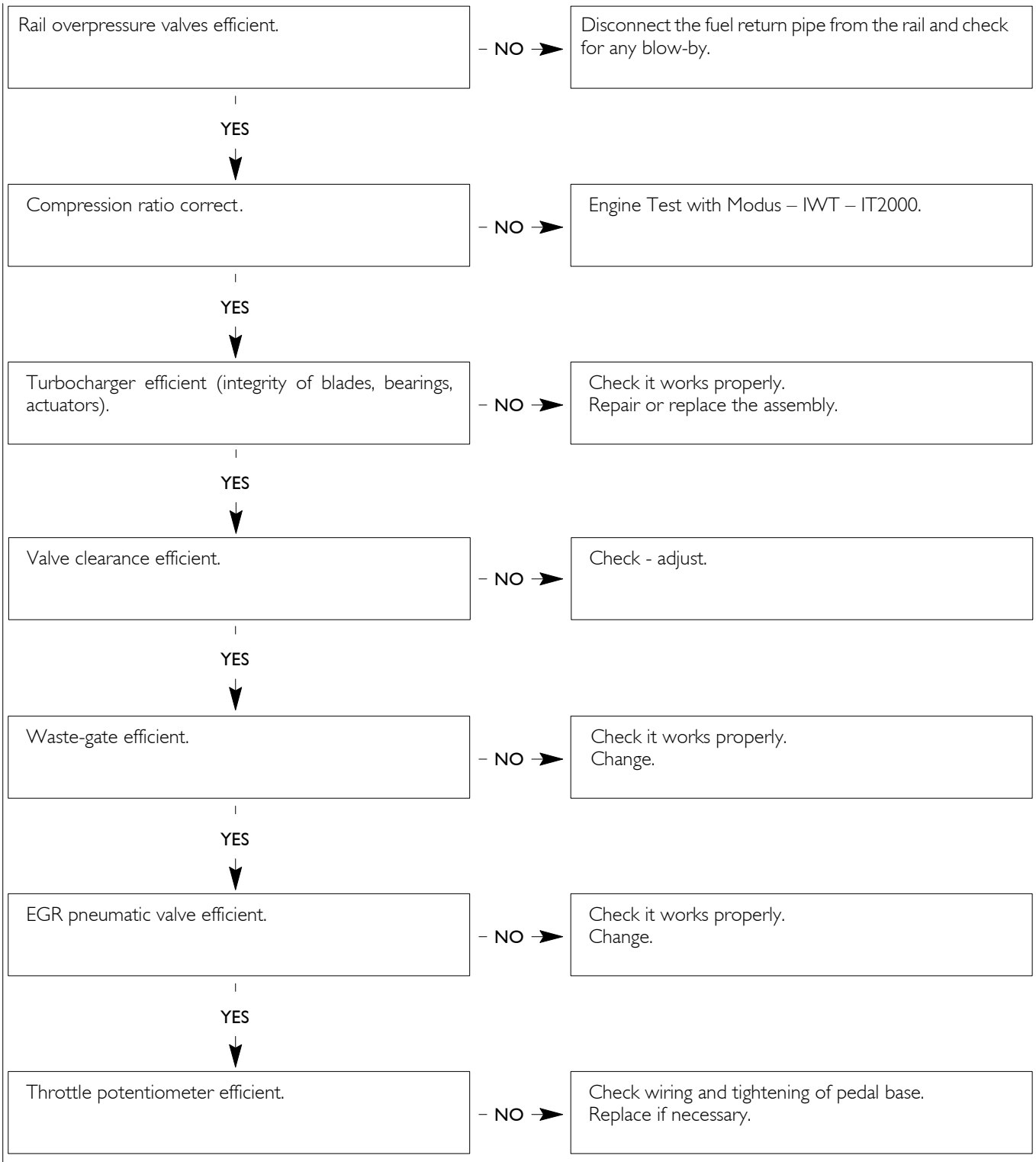
Rail overpressure valves efficient.
– NO →
Disconnect the fuel return pipe from the rail and check for any blow-by.
YES
Compression ratio correct.
– NO →
Engine Test with Modus – IWT – IT2000.
YES
Turbocharger efficient (integrity of blades, bearings, actuators).
– NO →
Check it works properly.
Repair or replace the assembly.
YES
Valve clearance efficient.
– NO →
Check - adjust.
YES
Waste-gate efficient.
– NO →
Check it works properly.
Change.
YES
EGR pneumatic valve efficient.
– NO →
Check it works properly.
Change.
YES
Throttle potentiometer efficient.
– NO →
Check wiring and tightening of pedal base.
Replace if necessary.

4 THE ENGINE PRODUCES BLACK OR DARK GREY SMOKE

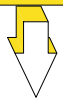

Air filter efficient.
– NO → Change.

YES

Injectors efficient.
– NO → Engine Test with Modus – IWT – IT2000.
Check O-ring seal.

YES

Cylinder compression correct.
– NO → Engine Test with Modus – IWT – IT2000.

YES

Starter heater solenoid valve efficient.
– NO → Plug the fuel delivery pipe and try starting again.
If the engine starts, check the supply and replace the solenoid valve if necessary.

YES

Turbocharger efficient.
– NO → Check it works properly.
Repair or replace.

YES

Waste-gate efficient.
– NO → Check it works properly.
Change.

YES

EGR pneumatic valve efficient.
– NO → Check it works properly.
Change.

5 THE ENGINE PRODUCES GREY SMOKE, TENDING TO WHITE

Injectors efficient.
– NO → Engine Test with Modus – IWT IT 2000. Check O-ring seal.

YES

Coolant level correct.
– NO → Probable passage of coolant into the combustion chambers. Change the cylinder head gasket or overhaul the engine.

6 THE ENGINE PRODUCES BLUE SMOKE

Oil in the cylinders.
– YES → Too much oil consumption. Turbine oil blow-by. Blow-by from valve guide.

7 THE ENGINE PRODUCES WHITE OR BLACK SMOKE

Timing sensor on flywheel efficient.
– YES → Check the sensor is correctly positioned. Position it correctly.

YES

Engine flywheel timing correct.
– YES → Check the timing is correct; do the timing if necessary.

8 THE ENGINE KNOCKS ABNORMALLY

Knocking identified on the crankshaft.
– YES → Check the clearance and ovalization of the main journals, the fixing of the screws for the main bearing caps and engine flywheel, and the oil pressure. Replace the parts or overhaul the engine.

NO

Knocking identified on the connecting rods.
– YES → Check the clearance and ovalization of the crankpins, the fixing of the screws for the connecting rod caps and for distortion of the connecting rods. Replace the parts or overhaul the engine.

NO

Knocking identified on the pistons.
– YES → Check the clearance between the pistons and cylinder liners, the integrity of the piston rings and the clearance between the piston bosses and pins. Replace the parts or overhaul the engine.

NO

Knocking identified in the cylinder head.
– YES → Check the working clearance between the rocker arms and valves for the timing. Adjust.

NO

Knocking identified in the timing system.
– YES → Check and if necessary replace the gears.

YES

Knocking identified in the air compressor.
– YES → Overhaul or replace the air compressor.

NO

Knocking identified in the injectors.
– YES → Replace.

(continues)

Starter heater solenoid valve efficient.	– NO →	Plug the fuel delivery pipe and try starting again. If the engine starts, check the supply and replace the solenoid valve if necessary.

YES ↓

Timing sensor on flywheel efficient.	– NO →	Check the sensor works properly. Position it correctly.

YES ↓

Engine flywheel timing correct.	– NO →	Check timing is correct; do the timing if necessary.

9 THE ENGINE STOPS

Fuel in the tank.	– NO →	Refuel and, if necessary, bleed.

YES ↓

Fuel filters efficient.	– NO →	Replace.

YES ↓

Fuel circuit efficient.	– NO →	Check the circuit and bleed it.

10 FUEL CONSUMPTION TOO HIGH

Fuel pipes and tank efficient.
– NO → Eliminate any leaks and replace the deteriorated parts.

YES

Air filter efficient
– NO → Replace.

11 OIL PRESSURE LOW OR TOO HIGH

Pressure adjustment valve trips correctly.
– NO → Check and replace if necessary.

YES

Oil pump and delivery pipes efficient.
– NO → Check and replace if necessary.

YES

Main and big end bearings efficient.
– NO → Replace the bearings and if necessary grind the crankshaft.

YES

Engine oil SAE viscosity correct.
– NO → Replace the engine oil with one of suitable viscosity.

ENGINES WITH ROTARY MECHANICAL INJECTION PUMP

ENGINE 8140.43C.43XX

ENGINE 8140.63.40XX

Engines with rotary mechanical injection pump

	Page
TROUBLESHOOTING	171
❑ Engine 8140.43C.43XX	181
❑ Engine 8140.63.40XX	209

TROUBLESHOOTING

Main engine operating faults with mechanical injection pump:

1 - engine will not start;
2 - engine overheats;
3 - engine lacks power;
4 - engine emits black or dark grey smoke;
5 - engine emits grey (whitish) smoke;
6 - engine emits blue smoke;
7 - abnormal knocking from the engine;
8 - engine stops;
9 - engine exceeds maximum rpm;
10 - oil pressure too high or too low;
11 - excessive fuel consumption.

1 ENGINE WILL NOT START

Battery terminal connections serviceable.	– NO →	Clean, check, tighten clamp nuts or replace.
YES ↓		
Battery serviceable.	– NO →	Carry out the checks described in the "Electrical Equipment" repair manual.
YES ↓		
Starter motor serviceable.	– NO →	Carry out the checks described in the "Electrical System" repair manual.
YES ↓		
Starter heater serviceable.	– NO →	Replace.
YES ↓		
Injection pump timing correct.	– NO →	Check correct timing as described in the relevant chapter.
YES ↓		
Fuel pump operating correctly.	– NO →	Check and replace if necessary.

(continued)

Injectors serviceable. – NO → Check operation and adjust.

YES

No air infiltration in fuel circuit or injection pump. – NO → Remove the causes of infiltration. Bleed.

YES

No water in fuel circuit or injection pump. – NO → Remove the causes of infiltration. Clean supply circuit, including tank

YES

Compression ratio as specified. – NO → Overhaul the engine or limit repairs to the parts concerned (valves, piston rings etc.).

YES

Fuel filters serviceable. – NO → Replace.

YES

Automatic advance regulator and electric STOP valve serviceable. – NO → Check and replace the parts concerned.

2 ENGINE OVERHEATS

Coolant level correct. – NO → Check for leaks and top up.

YES

Water pump and fan driving belts serviceable. – NO → Check, adjust tension and replace parts if necessary.

(continued)

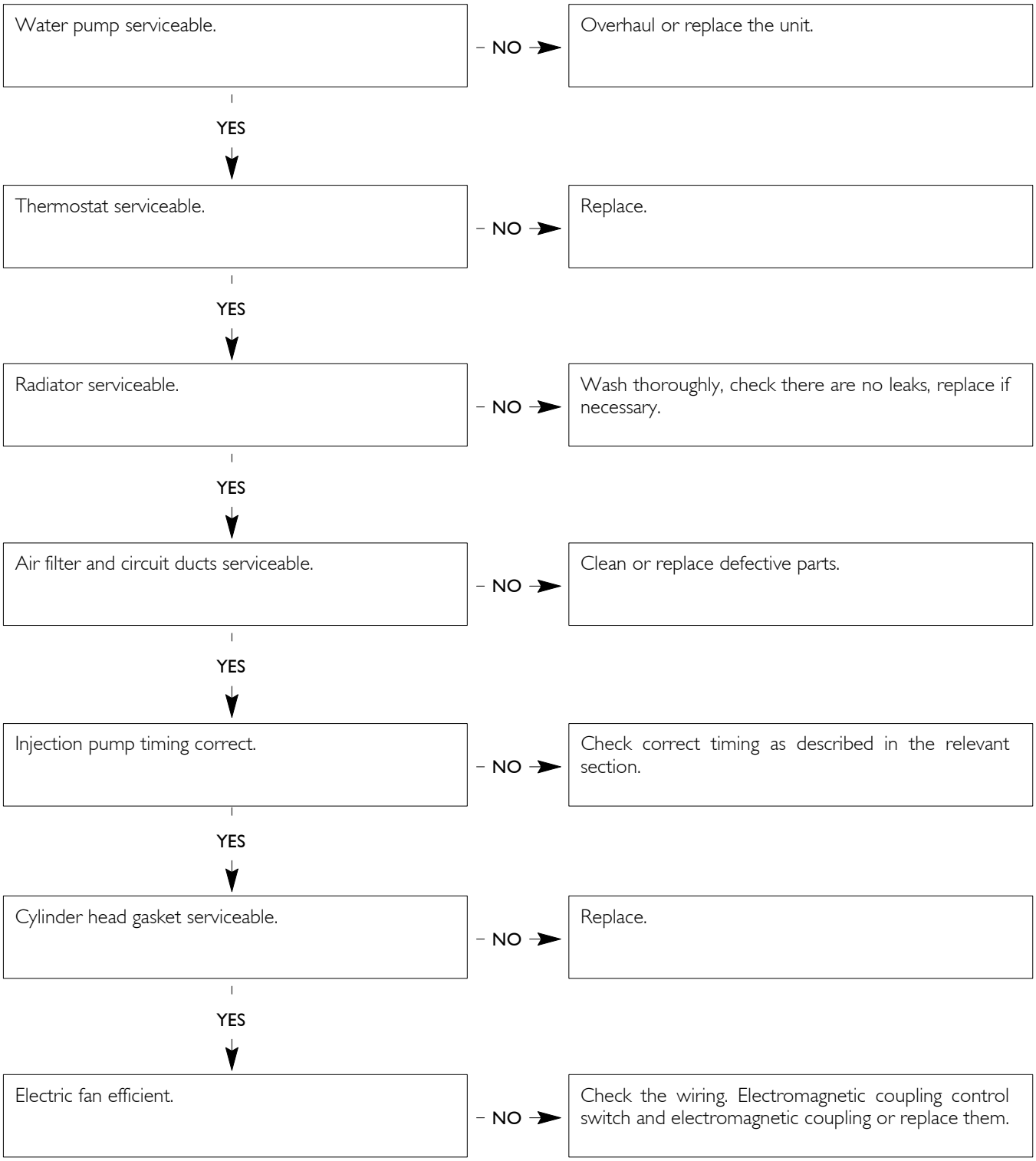
Water pump serviceable.
– NO →
Overhaul or replace the unit.
YES
Thermostat serviceable.
– NO →
Replace.
YES
Radiator serviceable.
– NO →
Wash thoroughly, check there are no leaks, replace if necessary.
YES
Air filter and circuit ducts serviceable.
– NO →
Clean or replace defective parts.
YES
Injection pump timing correct.
– NO →
Check correct timing as described in the relevant section.
YES
Cylinder head gasket serviceable.
– NO →
Replace.
YES
Electric fan efficient.
– NO →
Check the wiring. Electromagnetic coupling control switch and electromagnetic coupling or replace them.

3 ENGINE LACKS POWER

Fuel filters serviceable.
– NO → Replace, proceeding as described in the "Use and maintenance" booklet.

YES

Fuel circuit serviceable.
– NO → Check and repair as required.

YES

Thermostat serviceable.
– NO → Replace.

YES

Feed pump serviceable.
– NO → Replace.

YES

Injectors serviceable.
– NO → Check operating and adjust.

YES

Injection pump timing correct.
– NO → Check correct timing as described in the relevant section.

YES

Injection pump adjusted as specified.
– NO → Check and adjust the injection pump on the bench.

(continued)

Compression ratio as specified.	– NO →	Using tool 99395682 Motometer, check the specific coupling and make the necessary repairs.
YES ↓		
Turbocharger efficient (engine 8140.43C.4..).	– NO →	Repair or replace the unit.
YES ↓		
L.D.A. device and circuit efficient (engine 8140.43C.4..)	– NO →	Check.

4 ENGINE EMITS BLACK OR DARK GREY SMOKE

Air filter serviceable.	– NO →	Replace.
YES ↓		
Starter heater serviceable.	– NO →	Replace.
YES ↓		
Automatic boost device cutting in.	– NO →	Check and replace if necessary.
YES ↓		
Injectors serviceable.	– NO →	Check their operation and set them or replace them.
YES ↓		
Injection pump timing correct.	– NO →	Check correct timing as described in the relevant section.

(continued)

L.D.A. device efficient (engine 8140.43C.4..) – NO → Adjust the L.D.A. device using tool 99309002.

YES

Injection pump adjusted as specified. – NO → Check injection pump and adjust on bench.

YES

Compression ratio as specified. – NO → Using tool 99395682 Motometer, check the specific coupling and do the necessary work.

YES

Good quality diesel fuel. – NO → Clean the tank and replace the diesel filters.

5 ENGINE EMITS GREY (WHITISH) SMOKE

Thermostat operating correctly. – NO → Replace.

YES

Injectors serviceable. – NO → Check their operation and set them or replace them.

YES

Injection pump timing correct. – NO → Check correct timing as described in the relevant section.

YES

Coolant level correct. – NO → Coolant probably entering combustion chamber; replace cylinder head gasket or overhaul the engine.

(continued)

Good quality diesel fuel.	– NO →	Clean the tank and replace the diesel filters.

6 ENGINE EMITS BLUE SMOKE

Excessive oil consumption.	– YES →	Check oil breather, cylinder compressions. If necessary, overhaul the cylinder head or engine.

7 ABNORMAL KNOCKING FROM THE ENGINE

Knocking coming from crankshaft.	– YES →	Check main journals for clearance and ovality, tightness of main bearing cap bolts and flywheel bolts, oil pressure. Replace parts or overhaul the engine.

NO ↓

Knocking coming from connecting rods.	– YES →	Check crankpins for clearance and ovality, tightness of connecting rod cap bolts, connecting rods for distortion. Replace parts or overhaul the engine.

NO ↓

Knocking coming from pistons.	– YES →	Check clearance between pistons and cylinder liners, piston rings for breaks, gudgeon pin to piston boss clearances. Replace parts or overhaul the engine.

NO ↓

Knocking coming from cylinder head.	– YES →	Check operating clearance between rocker arms and valves, injection pump timing, valve timing. Adjust.

NO ↓

Knocking coming from timing gears.	– YES →	Check gears and replace if necessary.

(continued)

Knocking coming from air compressor. – YES → Overhaul or replace the air compressor.

NO

Knocking coming from injectors. – YES → Check their operation and set them or replace them.

8 **ENGINE STOPS**

Fuel in tank. – NO → Replenish and bleed if necessary.

YES

Fuel filters serviceable. – NO → Replace.

YES

Feed circuit serviceable. – NO → Check circuit and bleed.

YES

Idling speed correct. – NO → Adjust.

YES

Injector pump delivery correct. – NO → Check delivery on bench.

(continued)

Injector pump controls serviceable.	– NO →	Replace parts showing deterioration and adjust.

9 ENGINE EXCEEDS MAXIMUM RPM

Speed governor operating correctly.	– NO →	Check and replace worn parts if necessary.

10 OIL PRESSURE TOO LOW OR TOO HIGH

Pressure relief valve operating.	– NO →	Check and replace if necessary.

YES ↓

Oil pump and delivery pipes serviceable.	– NO →	Check and replace if necessary.

YES ↓

Main and big end bearings serviceable.	– NO →	Replace bearings and if necessary recondition crankshaft.

YES ↓

Engine oil viscosity SAE correct.	– NO →	Replace engine oil with one of suitable viscosity.

11 EXCESSIVE FUEL CONSUMPTION

Fuel tank and pipes serviceable.	– NO →	Eliminate any leaks and replace parts showing deterioration.

(continued)

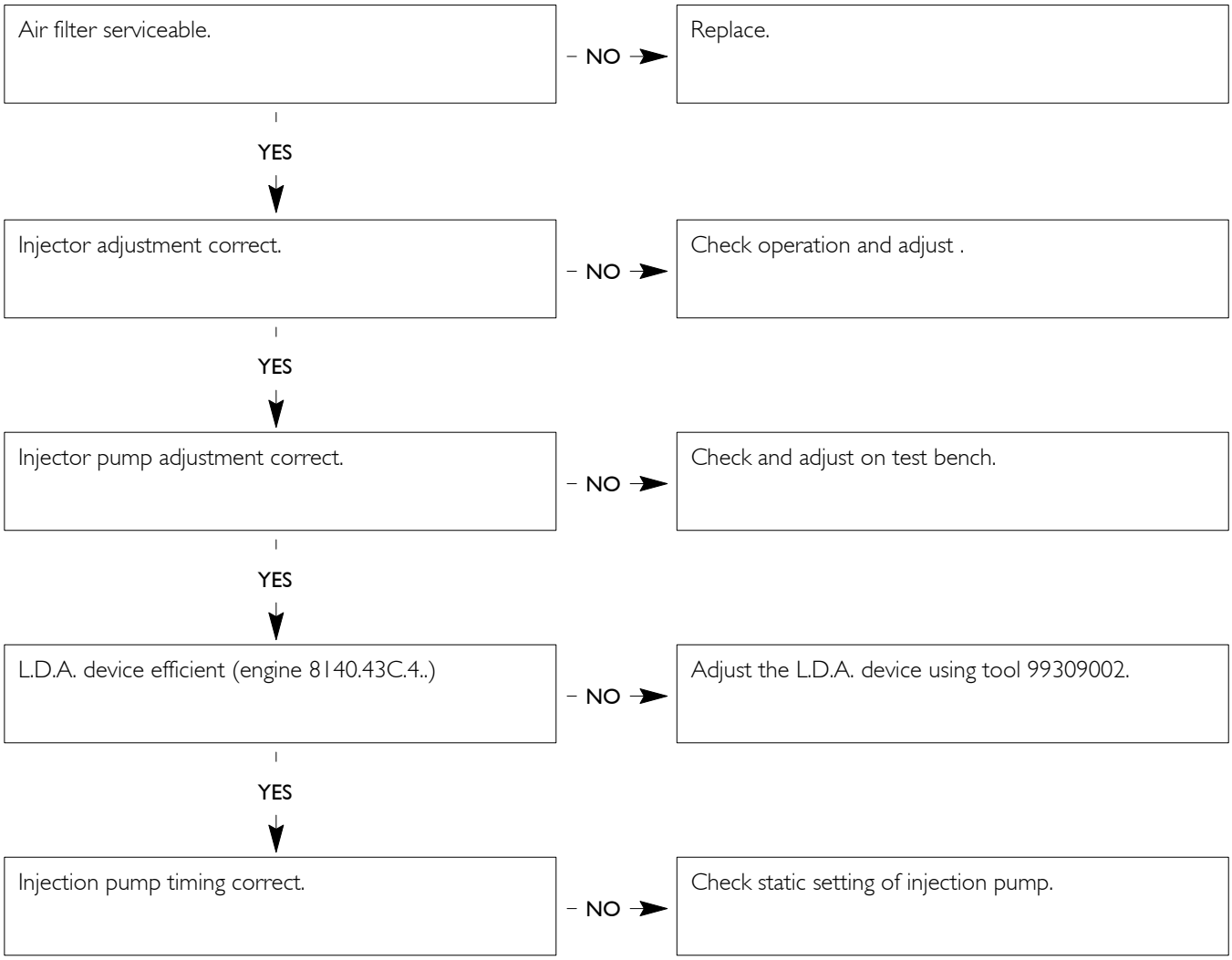
Air filter serviceable.
NO
Replace.
YES
Injector adjustment correct.
NO
Check operation and adjust .
YES
Injector pump adjustment correct.
NO
Check and adjust on test bench.
YES
L.D.A. device efficient (engine 8140.43C.4..)
NO
Adjust the L.D.A. device using tool 99309002.
YES
Injection pump timing correct.
NO
Check static setting of injection pump.

ENGINE 8140.43C

5401 Engine 8140.43C.43XX

	Page
❑ Gas emissions	185
❑ Smokiness	185
❑ Noise emissions	185
GENERAL SPECIFICATIONS	188
ASSEMBLY DATA - CLEARANCES	191
TIGHTENING TORQUE	196
TOOLS	197
ENGINE OVERHAUL	198
❑ Dismantling engine on bench	198
CYLINDER HEAD	199
❑ Engine assembling at the bench	199
❑ Injection pump assembling and timing	199
COOLING	200/1
FEEDING	201

Figure 1

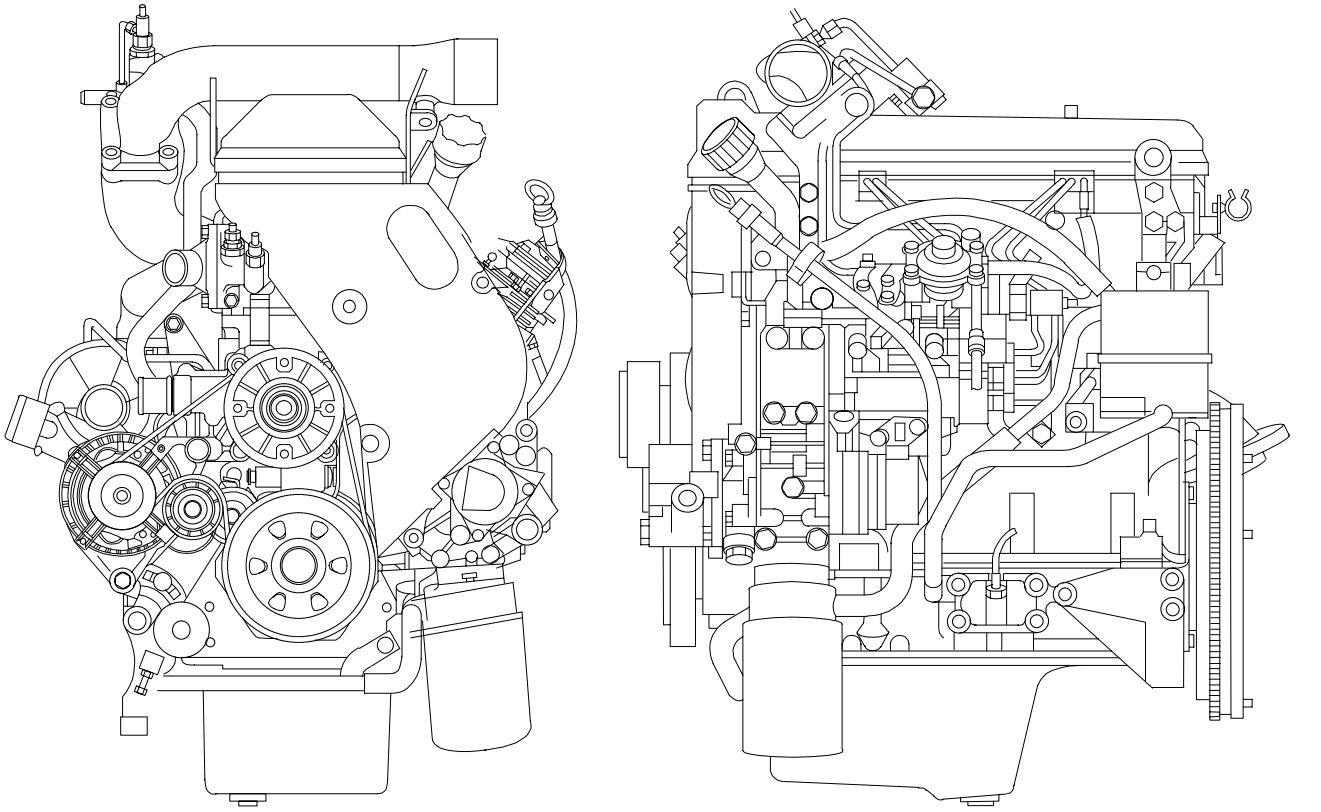

Gas emissions

Engine 8140.43C conforms with the Euro2 standards on gas emissions (measurement on engine bench according to R 49 cycle), with the following limits fixed by EEC 91/542 standards:

- CO (carbon monoxide) < 4.0 g/kWh
- NOx (nitrogen oxide) < 7.0 g/kWh
- HC (hydrocarbons) < 1.10 g/kWh
- Particulate < 0.15 g/kWh

Test fuel: CEC RFT 73 - T - 90 - S ≤ 0.05 %.

Smokiness

Engine 8140.43C conforms with the limits of smokiness required by EEC standards 72/306 and R 24-03 with the following exhaust smokiness values:

Maximum power (Bosch BSU opacimeter degrees)	2.0
Maximum torque (Bosch BSU opacimeter degrees)	2.5
Full load at 1000 rpm (Bosch BSU opacimeter degrees)	3.5

Noise emissions

Maximum mean noise level, Lpa, of the standard engines measured according to ISO Std. 3745 (microphones at 1 m from the engine surfaces):

Idling	(800 rpm)	dB A 79
Full power	(3600 rpm)	dB A 99

Figure 2

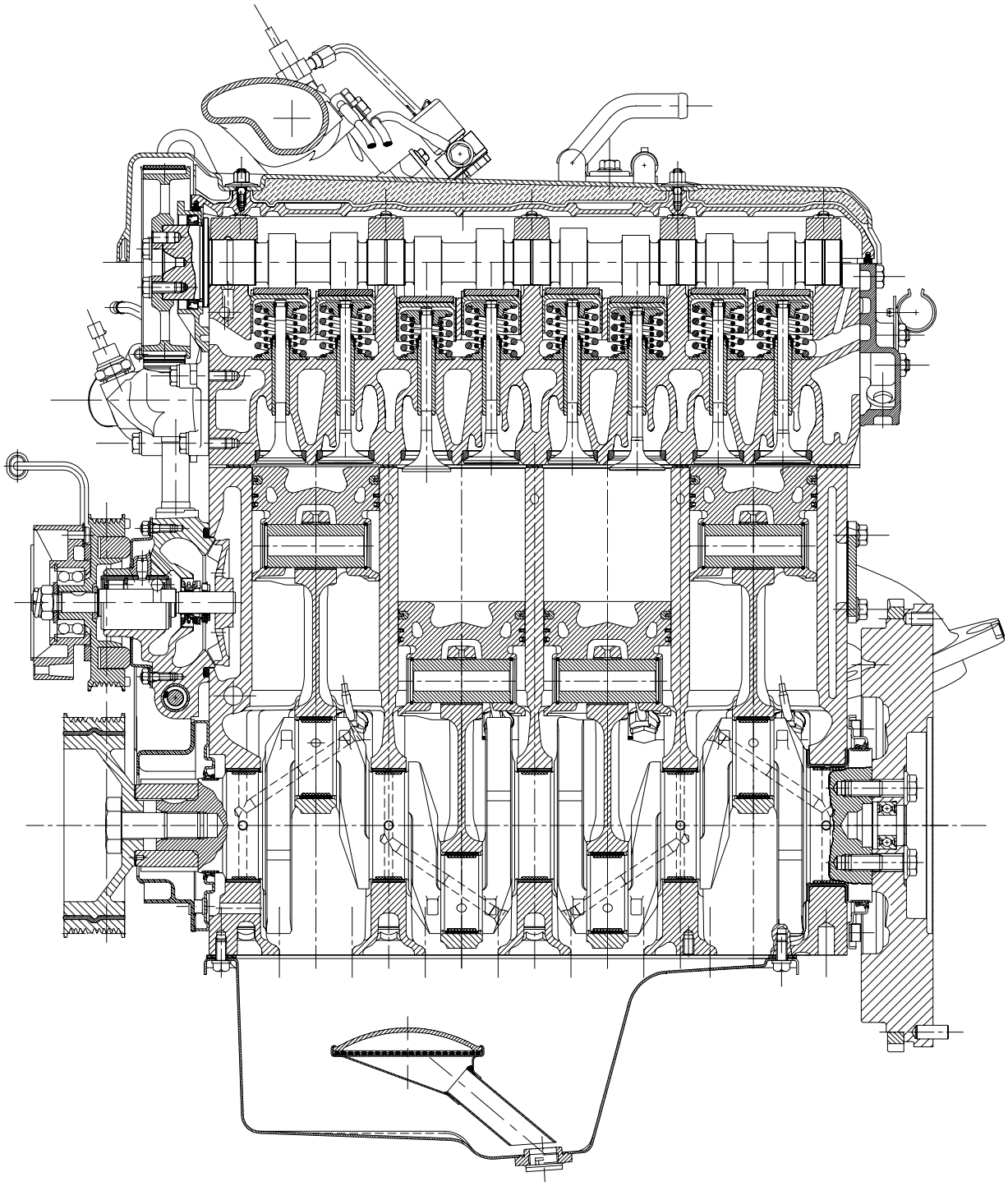

8140.43C.4... ENGINE LONGITUDINAL SECTION

Figure 3

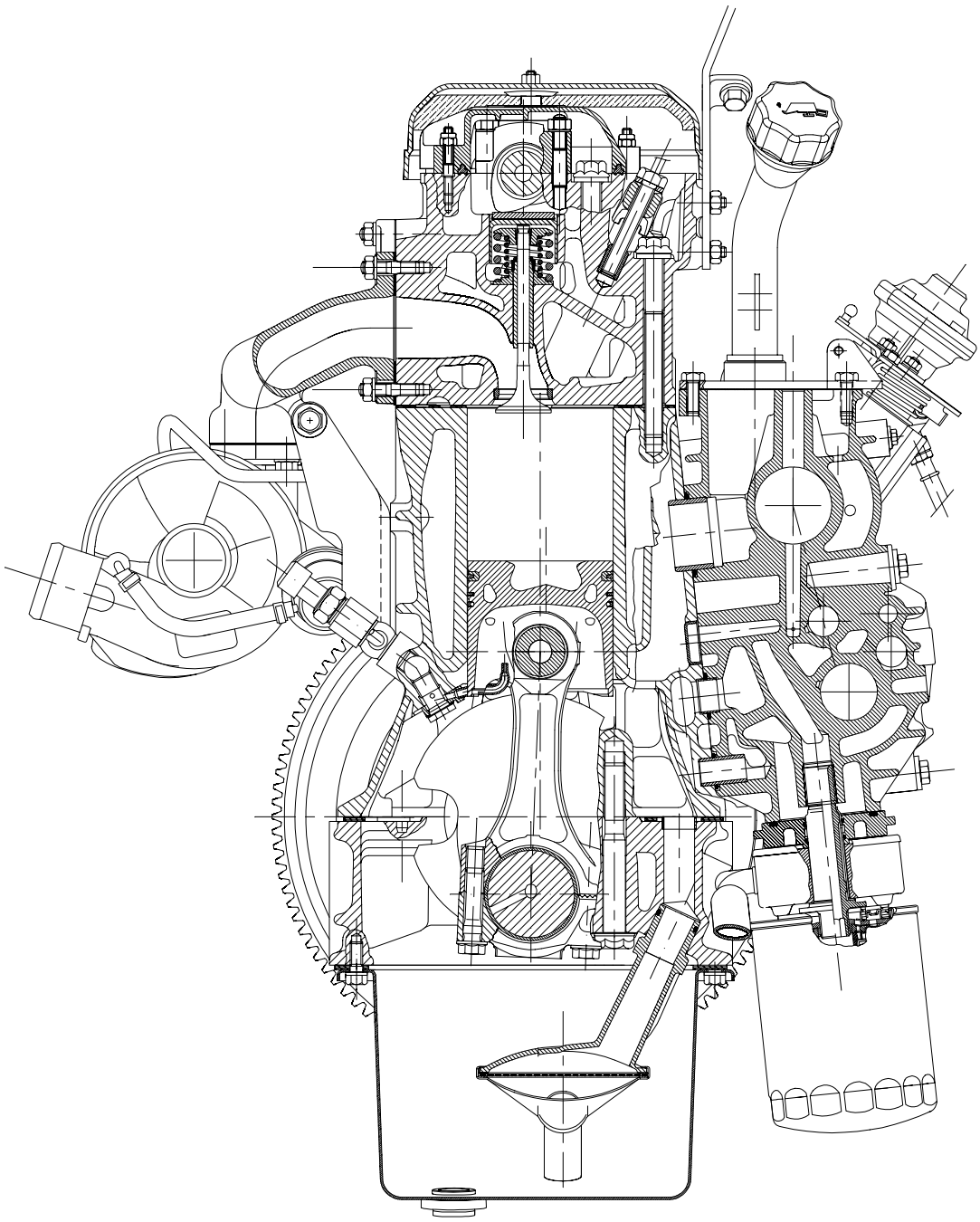

52179

8140.43C.4... ENGINE CROSS SECTION

GENERAL SPECIFICATIONS

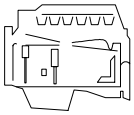	Type	**8140.43C.4.. ID/TCA**
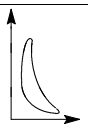	Cycle	Diesel 4 strokes
	Feeding	Supercharged
	Injection	Direct
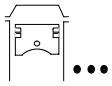	No. of cylinders	4 on-line
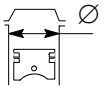	Diameter mm	94.4
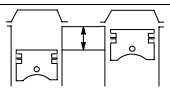	Stroke mm	100
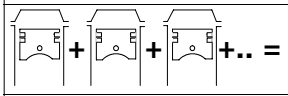	Total displacement cm^3	2800
	Compression ratio	18.5
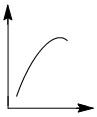 	Max. power kW (HP) rpm	73.8 ÷ 78.6 100.4 ÷ 106.9 3600
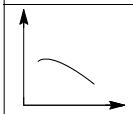 	Max. torque Nm (kgm) rpm	245.8 ÷ 268.6 25.1 ÷ 27.4 1800
	Engine idling speed, no load rpm	800 ± 25
	Maximum engine speed, no load rpm	4200 ± 50
	Pressure at T.D.C. *bar	20 ÷ 26
	Minimum permissible pressure at T.D.C. *bar	16

(*) The pressure value is recorded by turning the engine over with the electric starter motor, with oil temperature at 40°- 50°C and the injection pump in the stop condition.

ID = Direct injection
PC = Indirect injection (pre-chamber)
TCA = Supercharging with intercooler

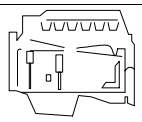	Type	**8140.43C.4..** **ID/TCA**
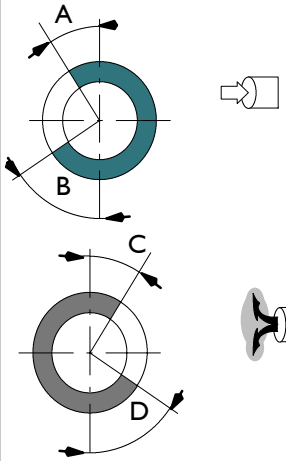	VALVE TIMING opens before T.D.C. A closes after B.D.C. B opens before B.D.C. D closes after T.D.C. C	 8° 37° 48° 8°
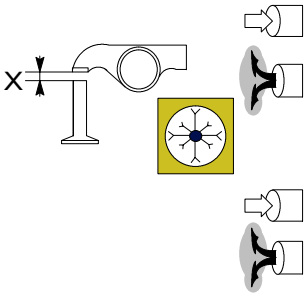	For timing check X mm mm Running X mm mm	 0.5 ± 0.05 0.5 ± 0.05 0.5 ± 0.05 0.5 ± 0.05
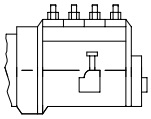	FUEL SUPPLY Bosch type injection pump - with immobilizer - without immobilizer Speed governor Cold start	 rotating distributor VER 824 VER 824-1 all speeds K.S.B. electrical, mechanical
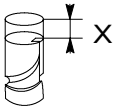	Pump arrangement With piston n. 1 at T.D.C. Start of delivery mm	 1.10 ± 0.05
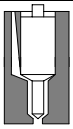	BOSCH injector nozzle type	SACLESS DSLA 134 P 604
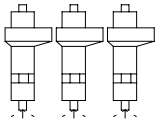	Injection order - injection pump - engine	 A - B - C - D 1 - 3 - 4 - 2
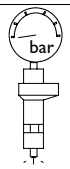	Injection pressure bar	240 + 12 *

* When checking, for any values of less than 200 bars, calibrate the injectors at 230 + 8 bar.

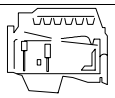	Type		**8140.43C.4.. ID/TCA**
	SUPERCHARGING		With intercooler
	Turbocharger type		KKK K03-2076-CCA 6.68
	marked with colour		pink
Turbocharger shaft radial clearance			-
Turbocharger shaft axial clearance			-
Minimum opening stroke of pressure relief valve		mm	-
Maximum opening stroke of pressure relief valve		mm	3.5 ± 0.2
Pressure corresponding to the minimum stroke		bar	-
Pressure corresponding to the maximum stroke		bar	1.3 ± 0.002
	Turbocharger type		MITSUBISHI TD04
	marked with colour		pink
Turbocharger shaft radial clearance			0.396 ÷ 0.602
Turbocharger shaft axial clearance			0.034 ÷ 0.106
Minimum opening stroke of pressure relief valve		mm	1
Maximum opening stroke of pressure relief valve		mm	5
Pressure corresponding to the minimum stroke		bar	1.11 ± 0.0026
Pressure corresponding to the maximum stroke		bar	1.35 ± 0.0039
	LUBRICATION		Forced feed by gear pump, relief valve, dual action oil filter
 	Oil pressure, engine hot		
	at idling speed	bar	⩾ 0.8
	at maximum speed	bar	⩾3.5
COOLING			With a centrifuge pump, driven by the crankshaft via a poly-V belt, thermostat, fan with electro-magnetic clutch, radiator, heat exchanger. "Intercooler"
	Thermostat:		
	starts to open:		82° C ± 2° C
	fully open:		110° C
	OIL REPLENISHMENT		
	Total capacity at 1st filling		
		liters	6.9
		kg	6.1
 Urania[c] Urania Turbo Urania Turbo LD	Quantity at periodical replacements: - engine sump		
		liters	5.2
		kg	4.6
 Urania[c] Urania Turbo Urania Turbo LD	- engine sump		
		liters	6.3
		kg	5.7

ASSEMBLY DATA - CLEARANCES

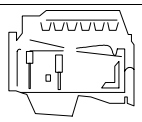	Type	**8140.43C.4.. ID/TCA**
CYLINDER BLOCK AND CRANK MECHANISM COMPONENTS		
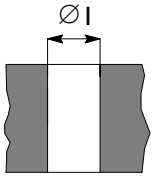	Bores for cylinder liners Ø 1	97.39 ÷ 97.45*
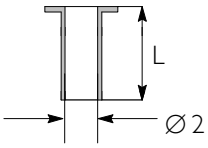	Cylinder liners: outside diameter Ø 2 length L	** 97.47 ÷ 97.50 167.00 ÷ 167.30
	Cylinder liners - crankcase bores (negative allowance)	0.02 ÷ 0.11
	Outside diameter Ø 2	0.2
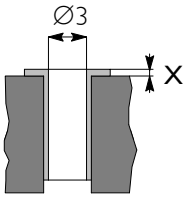	Cylinder barrels: (protrusion from engine block bottom) inside diameter Ø 3	** 0.005 max 94.402 ÷ 94.432
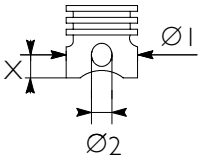	Pistons: supplied as spare parts type: measuring dimension X outside diameter Ø 1 pin bore Ø 2	MONDIAL PISTON 10 94.306 ÷ 94.320 32.003 ÷ 32.009
	Piston - cylinder sleeve	0.082 ÷ 0.126
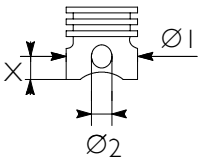	Pistons: supplied as spare parts type: measuring dimension X outside diameter Ø 1 pin bore Ø 2	KS 10 94.306 ÷ 94.320 32.003 ÷ 32.009
	Piston - cylinder sleeve	0.082 ÷ 0.126
	Piston diameter Ø 1	0.4
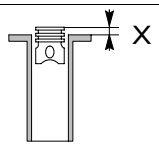	Pistons protrusion X	> 0.40 ÷ ≤ 0.80
	Gudgeon pin Ø 3	31.990 ÷ 31.996
	Gudgeon pin - pin housing	0.003 ÷ 0.015

* Diameter to be obtained at servicing when fitting spare cylinder barrels.
** Supplied as spare parts.

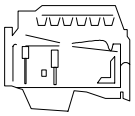	Type	**8140.43C.4..** **ID/TCA**
CYLINDER BLOCK AND CRANK MECHANISM COMPONENTS		
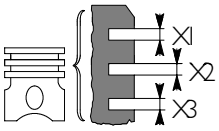	Piston type	MONDIAL PISTON - KS
	Piston ring grooves X1*	2.200 ÷ 2.230
	X 2	2.050 ÷ 2.070
	X3	2.540 ÷ 2.560
	* measured on Ø of 91.4 mm	
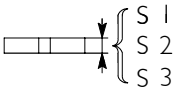	S 1*	2.068 ÷ 2.097
	Piston rings S 2	1.970 ÷ 1.995
	S 3	2.470 ÷ 2.490
	* measured on Ø of 91.4 mm	
	1	0.103 ÷ 0.162
	Piston rings - grooves 2	0.55 ÷ 0.100
	3	0.05 ÷ 0.09
IVECO PARTS 	Piston rings	0.4
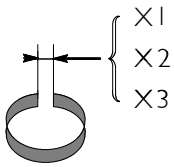	Piston ring end gap in cylinder liners	
	X1	0.20 ÷ 0.35
	X2	0.30 ÷ 0.50
	X3	0.30 ÷ 0.55
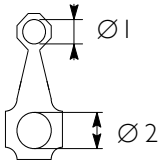	Small end bush housing Ø 1	35.460 ÷ 35.490
	Big end bearing housing * Ø 2	60.341 ÷ 60.348
	* spare connecting rod supplied	
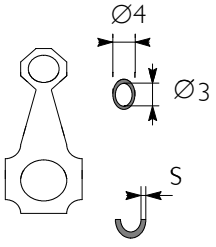	Small end bush diameter	
	outside Ø 4	35.570 ÷ 35.595
	inside Ø 3	32.010 ÷ 32.020
	Big end bearing shell supplied as spare parts S	1.875 ÷ 1.884
	Small end bush - housing	0.08 ÷ 0.135
	Piston pin - bush	0.014 ÷ 0.03
IVECO PARTS 	Piston rings	0.254 ÷ 0.508

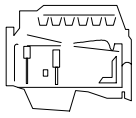	Type	**8140.43C.4..** **ID/TCA**
CYLINDER BLOCK AND CRANK MECHANISM COMPONENTS		
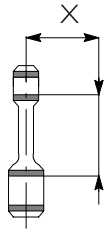	Measuring dimension X Max. connecting rod axis misalignment tolerance =	125 0.07
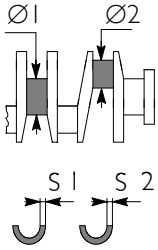	Main journals Ø 1 n° 1 - 2 - 3 - 4 n° 5 Crankpins Ø 2 Main bearing shells S1* Big end bearing shells S2* * supplied as spare parts	 80.182 ÷ 80.208 86.182 ÷ 86.208 56.515 ÷ 56.538 2.165 ÷ 2.174 1.875 ÷ 1.884
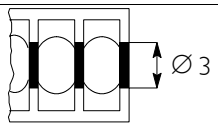	Main bearings Ø 3 n° 1 - 2 - 3 - 4 n° 5	 84.588 ÷ 84.614 90.588 ÷ 90.614
	Bearing shells - main journals	0.032 ÷ 0.102
	Bearing shells - big ends	0.035 ÷ 0.083
	Main bearing shells	0.254 ÷ 0.508
	Big end bearing shells	0.254 ÷ 0.508
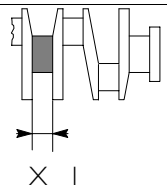	Main journal, thrust bearing X 1	31.000 ÷ 31.100
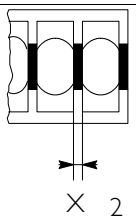	Main bearing housing, thrust bearing X 2	26.500 ÷ 26.550
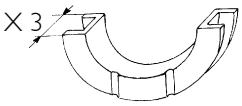	Thrust washer halves X 3	30.900 ÷ 30.950
	Crankshaft end float	0.060 ÷ 0.310

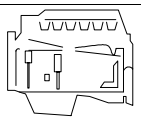	Type	**8140.43C.4..** **ID/TCA**
CYLINDER HEADS - VALVE GEAR		
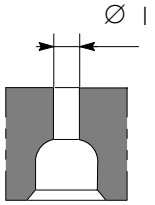	Valve guide housings in the cylinder heads Ø1	12.950 ÷ 12.985
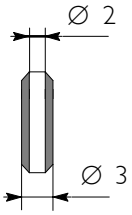	Valve guide Ø2 / Ø3	8.023 ÷ 8.038 13.012 ÷ 13.025
	Valve guides and housings in the cylinder heads	0.027 ÷ 0.075
IVECO PARTS	Valve guide	0.05 - 0.10 - 0.2
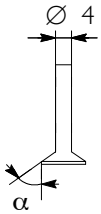	Valves: Ø4 α Ø4 α	7.985 ÷ 8.000 60° 15′ ± 7′ 30″ 7.985 ÷ 8.000 45° 30′ ± 7′ 30″
	Valve stem and its guide	0.023 ÷ 0.053
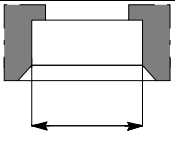	Housing in head for valve seat Ø1 Ø1	42.125 ÷ 42.175 37.380 ÷ 37.415
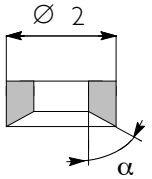	Outside diameter of valve seat; angle of valve seat in cylinder head: Ø2 α Ø2 α	42.245 ÷ 42.260 60° ± 5′ 37.495 ÷ 37.510 45° ± 5′
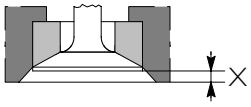	Recessing of valve X X X	1.2 ÷ 1.5 1 ÷ 1.3
	Between valve seat and head	0.070 ÷ 0.145 0.080 ÷ 0.130
IVECO PARTS	Valve seats	-

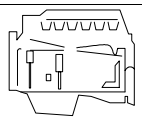	Type	**8140.43C.4.. ID/TCA**
CYLINDER HEADS - VALVE GEAR		
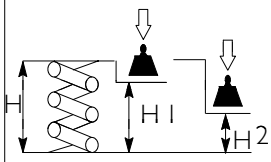	Valve outside spring height: free height H under a load of: kg 43.8 ± 2.5 H1 kg 77.4 ± 4 H2	 52 38.5 28.5
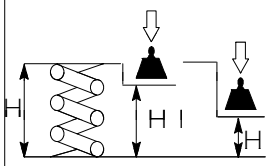	Valve inside spring height: free height H under a load of: kg 16.4 ± 1 H1 kg 30 ± 1.5 H2	 45.5 33.5 23.5
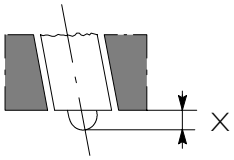	Injector protrusion X	2.23 ÷ 2.69
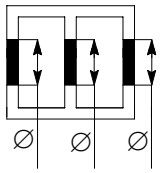	Camshaft bearing housing normal Ø oversized Ø	 33.985 ÷ 34.015 34.185 ÷ 34.215
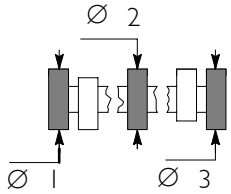	Camshaft bearing journals normal Ø oversized Ø	 33.934 ÷ 33.950 34.134 ÷ 34.150
	Between seats and supporting pins	0.035 ÷ 0.081
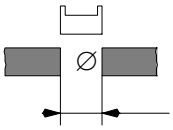	Tappets housing on cylinder heads Ø normal	 44.000 ÷ 44.025
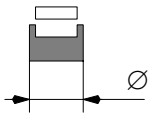	Tappet Ø normal	43.950 ÷ 43.970
	Between tappets and seats	0.030 ÷ 0.075
	Cap	3.25 to 4.45 mm with a progression of 0.05
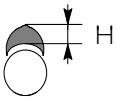	Cam lift: H H	 9.5 10.5

TIGHTENING TORQUE

This differs from the analogous section for 8140.43R/B/S/N engines in the following tightening torques.

PART	TORQUE	
	Nm	kgm
Nut M14 x 1.5 fixing toothed bushing to the injection pump	83	8.3
Nut or screw fixing injection pump	25	2.5
Fastening L.D.A. coupling to the intake manifold and to the injection pump	10	1
Screw fixing injector bracket	40	4
Screw fixing top cover of auxiliary element assembly	18	1.8
Fastening diesel inlet and outlet coupling on injection pump	25	2.5
Fastening diesel pipe fittings to the injection pump and injectors	33	3.3
Fastening "OUT" coupling on injection pump	25	2.5
Fixing diesel recovery pipes from the injectors	7	0.7

TOOLS

This differs from the analogous section for 8140.43R/B/S/N engines in the exclusion of tools 99317915 - 99389833 - 99395603 and the addition of the following tools.

TOOL NO.		DESCRIPTION
99352114	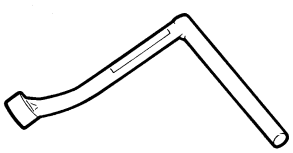	Wrench (13 mm) for nut on crankcase side fixing injection pump (8140.43C engines only)
99360486	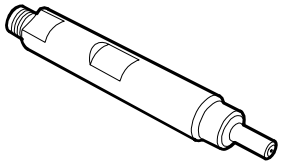	Fitting to check compression in cylinders (use with 99395682)
99395100	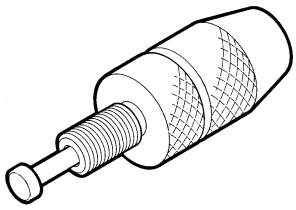	Dial gauge holding tool for injection pump setting
99395682	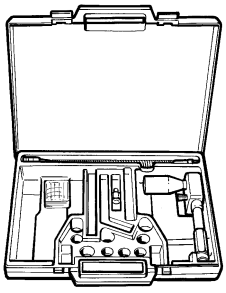	Device for checking diesel engine cylinder compression

ENGINE OVERHAUL

This differs from the overhaul of the 8140.43B/R/S/N engines in the following.

540110 Dismantling engine on bench

Figure 4

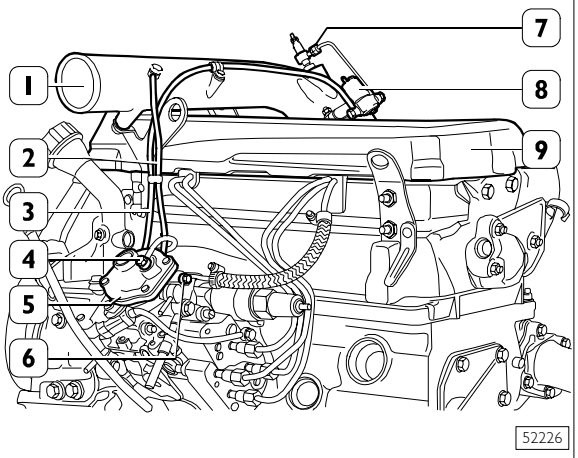

Take out the fitting (4) and disconnect the pipe (3) from the L.D.A. device (5).

Disconnect the pipe (2) from the fuel recirculation fitting (6).

Remove the air duct (1) complete with pipes (2, 3), thermostart glow plug (7) and thermostart solenoid valve (8) from the intake manifold.

Remove the soundproofing cover (9).

Figure 5

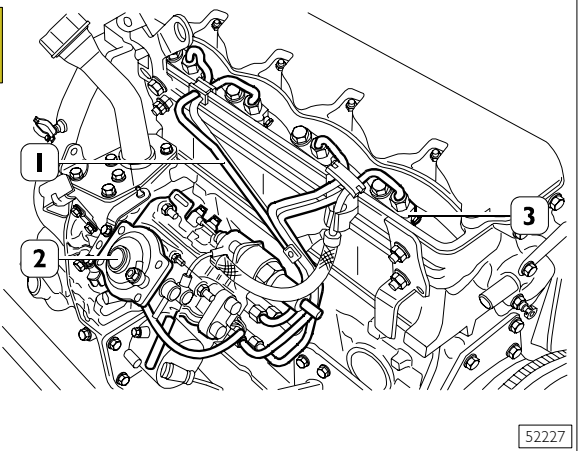

Disconnect the fuel pipes (1) from the injectors (3) and from the injection pump (2).

Figure 6

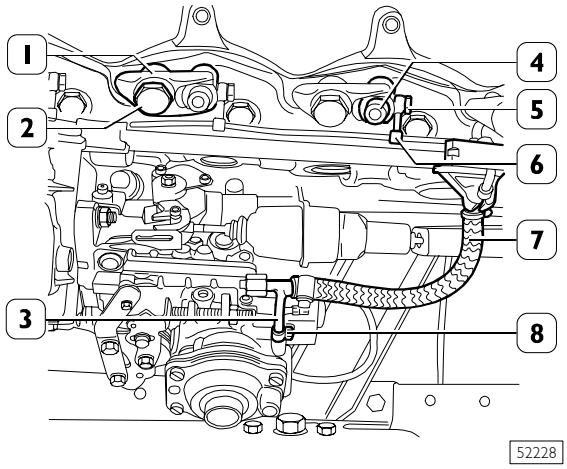

Remove connections (5) and disconnect fuel recovery pipes (6) from injectors (4).
Remove connection (8) and disconnect three-way connection (3) from injection pump including pipes (6-7) and spring plugs.
Remove injector (4) bracket (1) fixing screws (2).
Remove injectors from cylinder head.

Figure 7

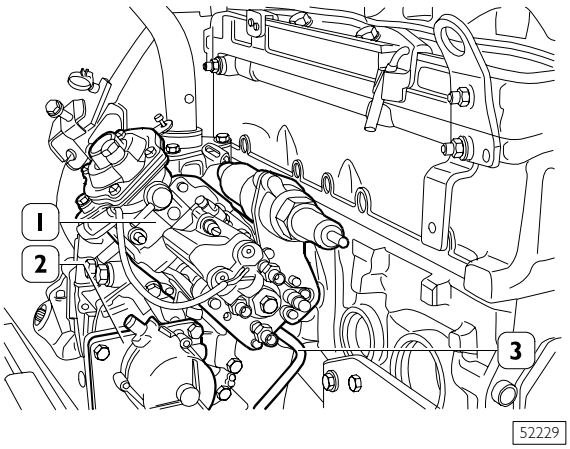

Mark the assembly position of the injection pump (1) on the auxiliary member assembly (2).

Remove the fixing nuts and disconnect the injection pump (1) from the auxiliary member assembly (2).

To remove the bottom fixing nut on the crankcase side, use wrench 99352114 (3).

560610 CYLINDER HEAD

Figure 8

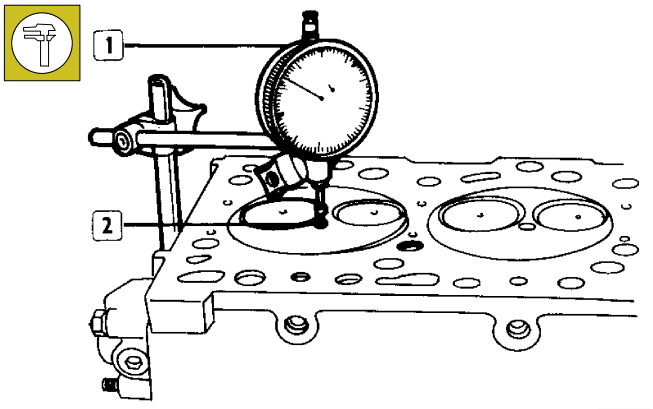

Use dial gauge (1) to check whether valve sunk and injector (2) protrusion from cylinder head surface are falling within the required value.

Engine assembling at the bench
Setting the timing system

Figure 9

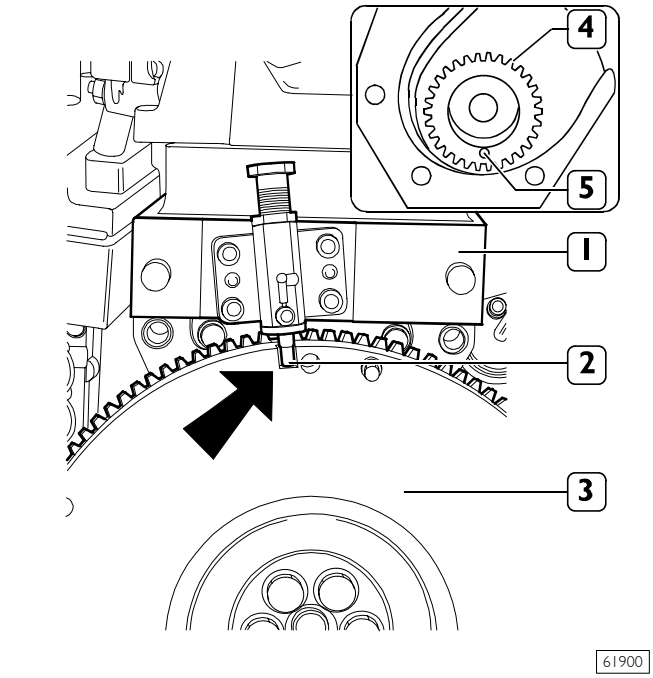

Check whether cylinder 1 piston is at TDC.
This condition takes place when tool 99395214 (1) pin (2) is fitted into engine flywheel (3) slit (⇒) and control gear hole (5) and timing gear (4) are facing downward.

Figure 10

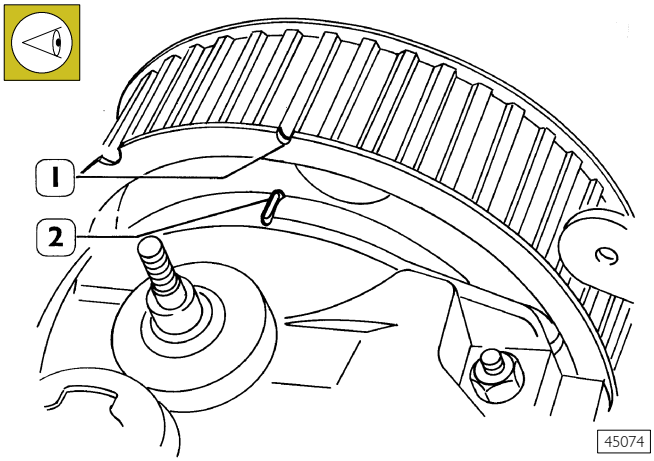

❑ Make coincide notch (1) engraved on camshaft driving toothed pulley, with that (2) engraved on valve tappets cover.

Figure 11

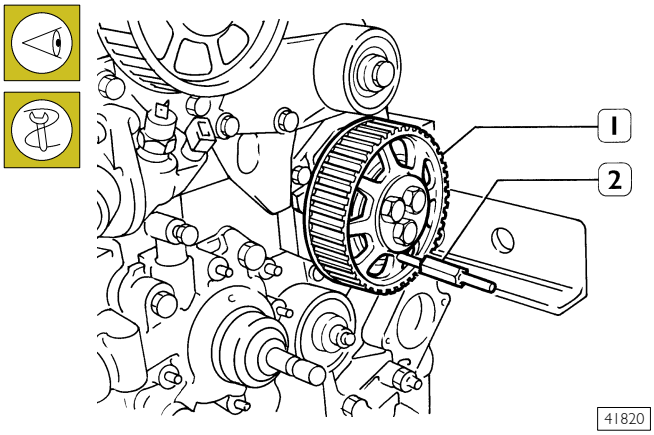

❑ Rotate accessory equipments driving toothed pulley (1) so as to align pulley hole (1) with that of support and lock rotation by inserting tool 99360608 (2).

Figure 12

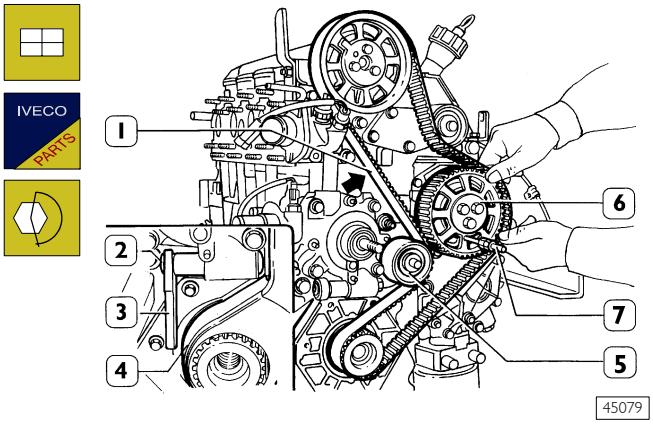

❑ Fit toothed belt (1);

❑ fit lower cover (4) and tighten fastening screws and nuts to prescribed torque;

❑ remove tool (3) so as pushing rod (2), acting on belt tightener (5), makes toothed belt taut (1);

Figure 13

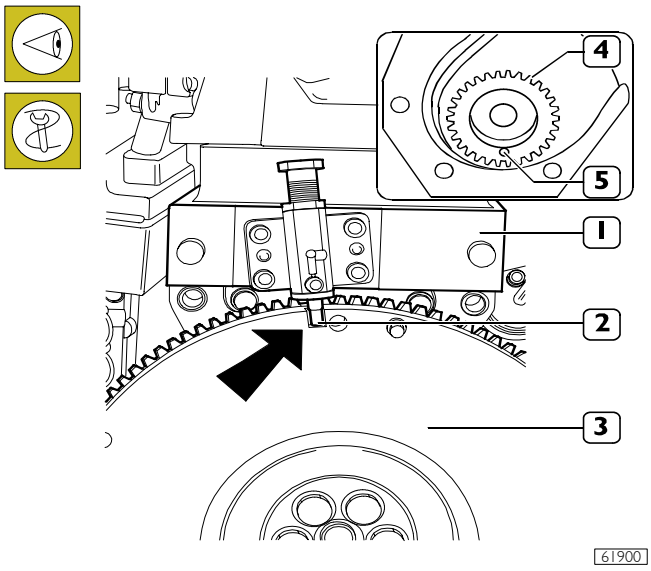

- ❑ remove engine flywheel (3) slit (⇒) from tool 99395214 (1) pin (2);
- ❑ turn the crankshaft slowly in the direction of rotation by two turns and check that hole (5) in gear (4) is facing downwards and that the pin (2) of the tool (1) is inserted in the slot (→) through the flywheel (3) when the timing belt is taut; the notches (1 and 2, Figure 10) must be aligned.

Figure 13/1

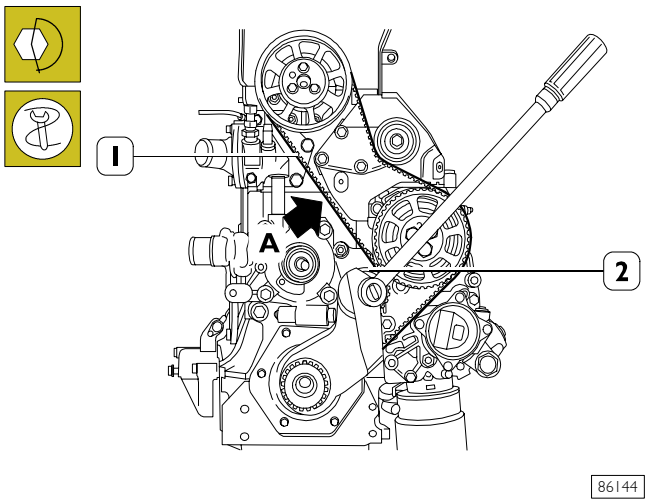

- ❑ lock the tightener (2), tightening the fixing nut at a torque of 37 ÷ 45 Nm;

Use tool 99395849 to check timing belt tension (1) which must be 88 ÷ 112 Hz in point A.

Injection pump assembling and timing

Figure 13/2

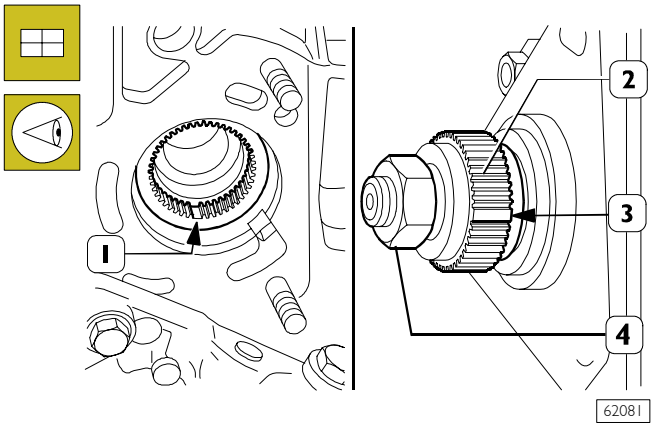

Should joint (2) be replaced, use tool 99365143 to lock joint (2) rotation when moving nut (4) and tool 99342138 to remove the joint from injection pump shaft.

Connect injection pump on accessory equipments group proceeding as follows:

- ❑ check for the exact timing of valve gear;
- ❑ Fit injection pump (2, Figure 13/3) on auxiliary component unit (3, Figure 13/3). The spline (1) obtained inside pump control shaft shall coincide with joint projection (3). Position the injection pump on auxiliary component unit so that marks performed at removal coincide.
- ❑ Screw pump fastening nuts (1, Figure 13/3) without tightening them;

Figure 13/3

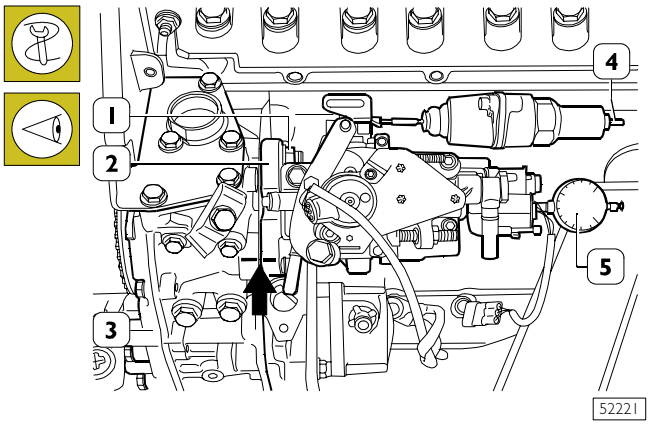

- ❑ Remove the plug, situated on pump closing screw, and screw tool 99395100 (5) with the rod in contact with distributor piston crown;
- ❑ prevaricate dial gauge 99395603 (5) of ~ 3 mm;
- ❑ feed the thermal bulb (4) of K.S.B. device with a 12 V voltage, throughout timing duration; in this way K.S.B. device is cut-out.

K.S.B. device is cut-out when advance changer lever is no more engaged.

- ❑ Reverse engine rotation until dial gauge (5) indicates that pump piston is at BDC.
- ❑ Set dial gauge to zero.

Figure 13/4

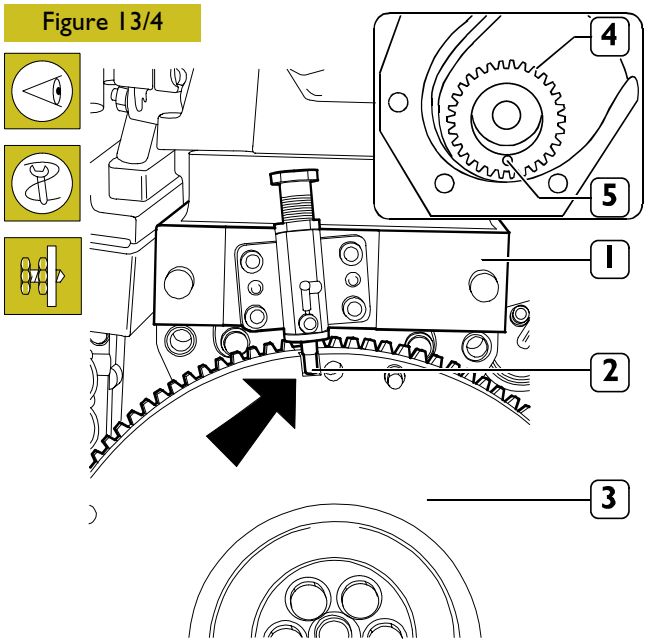

- ❑ Turn the engine flywheel (3) in its direction of rotation so that, when the hole (5) of the gear (4) driving the timing system goes into its lowest position, the pin (2) of tool 99395214 (1) goes into the milled slot (⇒) of the engine flywheel (3).
  In these conditions it is necessary to measure the stroke of the timing system piston on the dial gauge (5, Figure 13/3). If you find the stroke has a different value to the prescribed one, turn the pump casing in its slot to get the prescribed value indicated by the dial gauge.

Figure 13/5

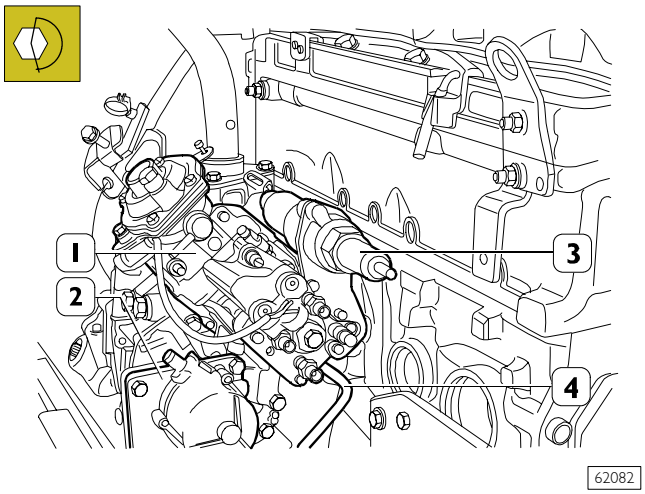

- ❑ Tighten the nuts fixing injection pump (1) to auxiliary component unit (2) to the specified torque.

⚠ To tighten injection pump fastening nut, engine crankcase side, use key 99352114 (4).

- ❑ cut-out feed to K.S.B. device (3);
- ❑ remove tool 99395100 with dial gauge (5, Figure 13/3) and screw again plug on locking screw;
- ❑ remove tool 99395214 (1, Figure 13/3).

⚠ When refitting fuel pipes, do not reuse metallic clamp with spring plug and fixing screw, but replace them with new parts.

Figure 13/6

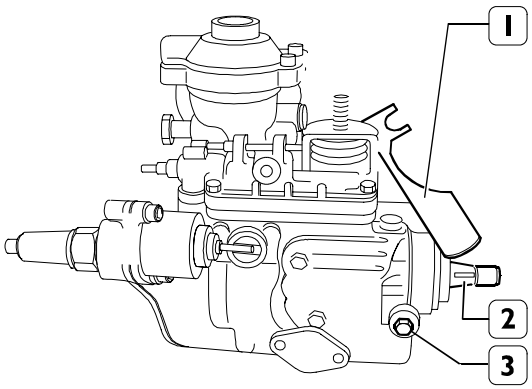

⚠ The injection pump is supplied as a spare part with the start of delivery already set and with the spacer (1).

The screw (3) locks the shaft (2) of the injection pump to keep the above-mentioned setting until the pump is fitted onto the engine.
After assembly, loosen the screw (3), to make it possible to insert the spacer (1) between the screw and the casing of the injection pump, then lock the screw (3), the spacer (1) is used to ensure the shaft of the injection pump turns.
After tightening the screw (3), twist the end of the spacer (1) so as to cause it to break off and then be removed.
After fitting the injection pump, check its timing as described under the relevant heading.

5432 COOLING

Coolant temperature:

- ❑ turning on the fan: 92 ± 2°C;
- ❑ turning off the fan: 87 ± 2°C.

Feeding

Page

INJECTION PUMP TEST VALUES 203

COLD INJECTION ADVANCE AUTOMATIC DEVICE (KSB) [KALT START BETRIEBSEINRICHTUNG] . . . 207

❑ Description 207

❑ Operation 207



The test and adjustment values indicated in the text and summary tables are given as a general indication.

INJECTION PUMP TEST VALUES

IVECO ENGINEERING	No. 500347285	Edit. 1

INJECTION ROTARY PUMP TEST VALUES

Injection pump: VE4/12F1800R824 Speed governor: All speeds	IVECO PART N.: 500329477 BOSCH PART N.: 0460 424 177

Engine : 8140.43C.4000 For: IVECO

Timing:
- Injection pump static advance (Output reference "A") 1.0 ± 0.5 degrees before |X| after | | T.D.C. with I.P. pumping in phase of delivery at 1 mm from B.D.C.
- Or with piston at T.D.C. and injection pump pumping in phase of delivery at 1.10 ± 0.04 mm from B.D.C.
- Engine idling speed without load: 800 ± 25 rpm

TEST BENCH WITH STATIC AND DYNAMIC CHARACTERISTICS
CONFORMING TO STANDARDS ISO 4008/1 -/2

- Rotation direction: Right |X| Left
- Pipes: Ø 6 x Ø 2 x450 mm
- Injectors: 1688 901 027
- Calibrated hole pad: = Ø 0.5 mm
- Injector setting : 250 ± 3 bar
- Backflow chock: Ø 0.75 mm
- Supply pressure: 0.35 ± 0.05 bar
- Burette evacuation time:
- Test fluid conforming to standard: ISO 4113
- Temperature Influx / Defluxion |X|
- Thermometer : 55 ± 1 5C
- Electronic : ± 4 5C

"INJECTION PUMP ADJUSTMENT VALUES"
"THE NUMBERS GIVEN IN BRACKETS SHOULD
BE USED ONLY AS CONTROL VALUES"

1 - START OF DELIVERY

Pre-lift (from B.D.C.)	mm:	0 ± 0.02

2 - ADVANCE CHANGER TRAVEL

Speed	rpm:	900
Overcharging pressure	hPa:	1200
Adjustment values	mm:	1.2 ± 0.1

3 - TRANSFER PUMP PRESSURE

Speed	rpm:	900
Overcharging pressure	hPa:	1200
Adjustment values	bar:	5.9 ± 0.3

4 - DELIVERY AT FULL LOAD WITH OVERCHARGING

Speed	rpm:	1100
Overcharging pressure	hPa:	1200
Delivery per 1000 shots	cm^3:	57.5 ± 0.5
Max difference	cm^3:	4.0 (4.5)

5 - DELIVERY AT FULL LOAD WITHOUT OVERCHARGING

Speed	rpm:	550
Delivery per 1000 shots	cm^3:	28.5 ± 0.5
Max difference	cm^3:	

6 - IDLE SPEED ADJUSTMENT

Speed	rpm:	350
Delivery per 1000 shots	cm^3:	7.0 ± 2.0
Max difference	cm^3:	6.0 (6.5)

7 - ADJUSTING THE RESIDUAL DELIVERY

Speed	rpm:	
Delivery per 1000 shots	cm^3:	

8 - MAXIMUM SPEED ADJUSTMENT

Speed	rpm:	2000
Overcharging pressure	hPa:	1200
Delivery per 1000 shots	cm^3:	43.0 ± 0.5

Date: 17-11-1998

Print 603.43.351 Base - 3rd Ed. - February 2002

IVECO ENGINEERING	No. 500347285	Edit. 1

INJECTION ROTARY PUMP TEST VALUES

9 - START

Speed	rpm:	100
Delivery per 1000 shots	cm^3:	75.0 ± 20
Minimum delivery	cm^3:	55.0

10 - "LFB" SETTING

Speed	rpm:	
Overcharging pressure	hPa:	
.1. Delivery difference per 1000 shots	cm^3:	
.2. Transfer pump pressure difference	bar:	

11 - INJECTION ADVANCE RUN

Overcharging pressure	hPa:	1200
.1 Speed	rpm:	900
Advance travel	mm:	1.2 ± 0.1
	mm:	(± 0.7)
.2 Speed	rpm:	1500
Advance travel	mm:	3.6 ± 0.6
	mm:	(± 0.7)
.3 Speed	rpm:	
Advance travel	mm:	
	mm:	
.4 Speed	rpm:	
Advance travel	mm:	
	mm:	

12 - TRANSFER PRESSURE RUN

Overcharging pressure	hPa:	1200
.1 Speed	rpm:	900
Transfer pump pressure	bar:	5.9 ± 0.3
.2 Speed	rpm:	1800
Transfer pump pressure	bar:	8.3 ± 0.5
.3 Speed	rpm:	600
Transfer pump pressure	bar:	4.9 ± 0.5
.4 Speed	rpm:	
Transfer pump pressure	bar:	

13 - BACKFLOW VOLUME ON VALVE

.1 Speed		rpm:	600
Overcharging pressure		hPa:	1200
Backflow volume	c.c./10s:		113 ÷ 146
	c.c./10s:		(107 ÷ 152)
.2 Speed		rpm:	1800
Overcharging pressure		hPa:	1200
Backflow volume	c.c./10s:		143 ÷ 187
	c.c./10s:		(138 ÷ 193)

14 - DELIVERY RUN AND ADJUSTMENT

.1 Speed		rpm:	500 (*)
Overcharging pressure		hPa:	500
Delivery per 1000 shots		cm^3:	48.5 ± 0.5
		cm^3:	(± 3.5)
.2 Speed		rpm:	2230
Overcharging pressure		hPa:	1200
Delivery per 1000 shots		cm^3:	1.5 ± 1.5
		cm^3:	(± 2.0)
.3 Speed		rpm:	2100
Overcharging pressure		hPa:	1200
Delivery per 1000 shots		cm^3:	21.0 ± 6.0
		cm^3:	(± 8.0)
.4 Speed		rpm:	2000
Overcharging pressure		hPa:	1200
Delivery per 1000 shots		cm^3:	43.0 ± 0.5
		cm^3:	(± 4.5)
.5 Speed		rpm:	1800
Overcharging pressure		hPa:	1200
Delivery per 1000 shots		cm^3:	5.8 ± 2.5
		cm^3:	(±3.5)
.6 Speed		rpm:	1100
Overcharging pressure		hPa:	1200
Delivery per 1000 shots		cm^3:	57.5 ± 0.5
		cm^3:	(± 3.5)
.7 Speed		rpm:	600
Overcharging pressure		hPa:	1200
Delivery per 1000 shots		cm^3:	60.5 ± 4.0
		cm^3:	(± 6.0)
.8 Speed		rpm:	550
Overcharging pressure		hPa:	0
Delivery per 1000 shots		cm^3:	28.5 ± 0.5
		cm^3:	(±3.5)
.9 Speed		rpm:	
Overcharging pressure		hPa:	
Delivery per 1000 shots		cm^3:	
		cm^3:	
.10 Speed		rpm:	
Overcharging pressure		hPa:	
Delivery per 1000 shots		cm^3:	
		cm^3:	

IVECO ENGINEERING	No. 500347285	Edit. 1

INJECTION ROTARY PUMP TEST VALUES

15 -DELIVERY NULL (STOP)

1	Mechanical:		
	Speed	rpm:	425
	Delivery per 1000 shots	cm^3:	1.5 ± 1.5
	Voltage	volt:	12
2	Electrical:		
	Speed	rpm:	350
	Delivery per 1000 shots	cm^3:	1.5 ± 1.5
	Voltage	volt:	0

16 - DELIVERY AT IDLING SPEED

1	Speed	rpm:	350
	Delivery per 1000 shots	cm^3:	7.0 ± 2.0
			(± 4.0)
2	Speed	rpm:	
	Delivery per 1000 shots	cm^3:	
		cm^3:	
3	Speed	rpm:	
	Delivery per 1000 shots	cm^3:	
4	Speed	rpm:	
	Delivery per 1000 shots	cm^3:	
	Residual delivery check		
5	Speed	rpm:	
	Delivery per 1000 shots	cm^3:	

17 - "LFB" CHECK

Speed	rpm:	
Overcharging pressure	hPa:	
1 Delivery difference		
per 1000 shots	cm^3:	
Advance travel diff.	mm:	
2 Delivery per 1000 shots	cm^3:	
Advance travel diff.	mm:	

18 - AUTOMATIC START EXTRA DELIVERY

1	Speed	rpm:	100
	Delivery per 1000 shots	cm^3:	75.0 ± 20.0
		cm^3:	min. 55
2	Speed	rpm:	370
	Delivery per 1000 shots	cm^3:	55.0 ± 20.0
		cm^3:	max 75
3	Speed	rpm:	
	Delivery per 1000 shots	cm^3:	
		cm^3:	

19 - POTENTIOMETER CALIBRATION AND CHECKING

Supply	volt:	
Setting		
Speed	rpm:	
Delivery per 1000 shots	cm^3:	
Potentiometer output voltage	volt:	
Checking:		
Speed	rpm:	
Delivery per 1000 shots	cm^3:	
Potentiometer output voltage	volt:	

20 - EGR MICROSWITCH CALIBRATION

Speed	rpm:	
Overcharging pressure	hPa:	
Delivery per 1000 shots	cm^3:	

21 - GLOW PLUG MICROSWITCH ADJUSTMENT

Contact closed at:
control lever travel
of injection pump
of injection

22 - CUT-OUT ELECTROMAGNET

Operating minimum voltage	volt:	10
Rated voltage	volt:	12

23 - ASSEMBLING AND ADJUSTING DIMENSIONS

Denomination:		
K	mm:	3.6
MS	mm:	0.9
Ya	mm:	34.0 ± 1.0
Yb	mm:	47.0 ± 3.0

Devices		
LDA STROKE	mm:	5.2 + 0.2
KSB LEVER	:	
KSB ADVANCE	mm:	5.71
KSB ADVANCE A.P. DEGREES	:	2.0

IVECO ENGINEERING	No.500347285	Edit. 1

INJECTION ROTARY PUMP TEST VALUES

REMARKS:

1) References for which no letters or numbers are given are reserved for other injection pump designs.

2) For a correct adjustment of injection pumps on the electric bench, conform to the manual IVECO Technical Publications and Training No. XXXXXXXXX

3) Measurements taken on injection pumps equipped with "KSB" must be performed with the same at rest.

4) (*) LDA adjusting point: act on spring pre-loading ring.

5) After every variation of LDA pressure, act on the control lever.

6) For adjusting the starting point (ARF valve) add a 12.0 mm spacer to the third delivery stop.

NOTES: BOSCH SHEET ED. 3 DTD. 10.07.98	C.I.D. 1-114734-006-085	DATE 17-11-1998

COLD INJECTION ADVANCE AUTOMATIC DEVICE (KSB) [KALT START BETRIEBSEINRICHTUNG]

Figure 14

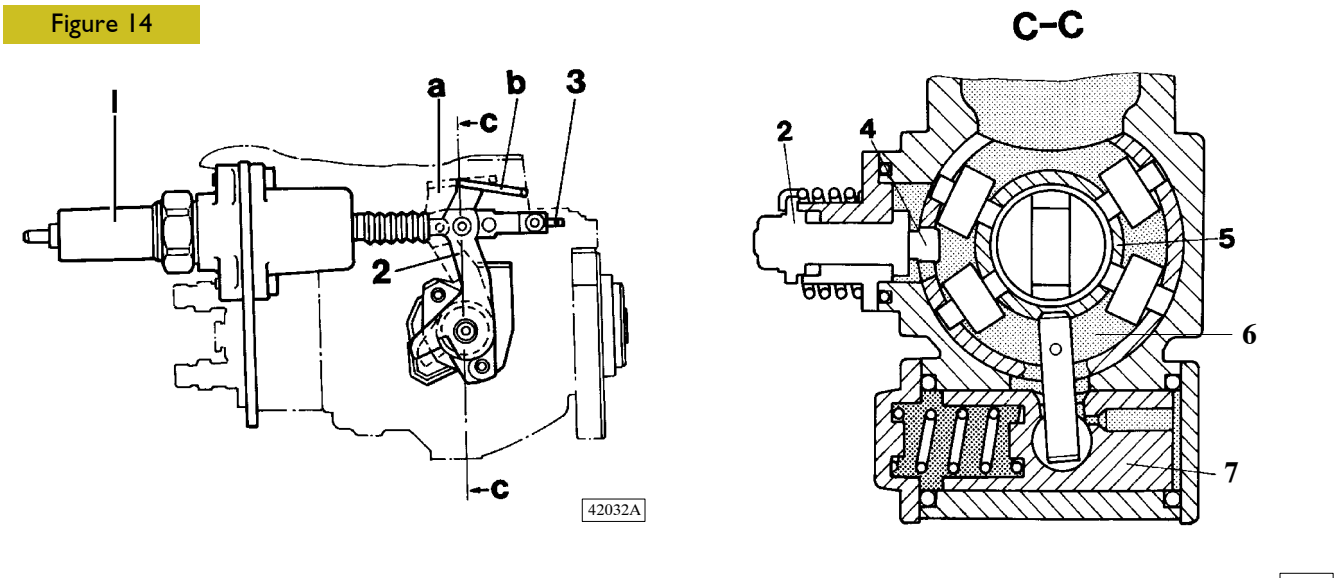

1. Wax thermal bulb - 2. Control lever - 3. Flexible connecting cable - 4. Eccentric pin - 5. Roll-carrier ring - 6. Advance changer piston - a. Lever position (2) in cold start condition - b. Lever position (2) in normal operating condition.

Description

Rotary injection pumps, with mechanical speed governor, that are fitted on the engines dealt with in this publication, are equipped with a cold injection advance automatic device (KSB). This tool has the purpose of setting the injection advance, below a given temperature, to a greater value than that static one of pump fitting to the engine, and to reset it by degrees to the value of this latter, as temperature rises.

Operation

KSB cold injection advance automatic device is a mechanical type electric drive tool that mainly consists of a wax thermal bulb (1) that acts on the advance changer control lever (2), through a pushing rod and a connecting cable (3).

When starting a cold engine, the thermal bulb (1) pushing rod, that operates on the connecting cable (3), is placed at back position; consequently the lever (2) is kept in position "**a**".

In this condition the eccentric pin (4) (which is operated by the lever (2)), changes the position of roll carrier ring (5) with respect to its normal position and, in its turn, it causes piston (6) to move, thus producing an increase of advance with respect to the value of fitting static advance.

At engine start the resistance existing in the thermal bulb (1) is supplied by alternator D^+.

The heat generated by the flow of current, heats the wax that expands and causes pushing rod to come out, resetting the lever (2) to position "**b**" by degrees.

In this way the extra advance is cancelled, since the parts of advance changer come back to their normal operating position.

The full cut-out of KSB device is achieved after about 3-4 minutes of operation.

The check and adjustment, if required, of KSB tool is carried out with the injection pump placed on a test bench.

Coolant temperature values for KSB heat bulb connection

Engine 8140.43C:

- ❑ connection at 45°C ± 2°C
- ❑ disconnection at 30°C ± 2°C

Engines 8140.63 - 8140.43S

- ❑ at altitudes <1000m:
  - connection at 25°C ± 3°C
  - disconnection at 20°C ± 3°C
- ❑ at altitudes >1000m:
  - connection at 55°C ± 4°C
  - disconnection at 50°C ± 4°C

ENGINE 8140.63

5401 Engine 8140.63.40XX

	Page
EMISSIONS VALUES	213
❑ Gas emissions	213
❑ Smokiness	213
❑ Noise emissions	213
GENERAL SPECIFICATIONS	214
ASSEMBLY DATA - CLEARANCES	217
TIGHTENING TORQUES	223
TOOLS	224
8140.63 ENGINE OVERHAUL	227
❑ Dismantling engine on bench	227
PISTONS - PINS - SNAP RINGS	230
❑ Assembling connecting rod-piston assembly	231
❑ Fitting connecting rods-pistons	231
CYLINDER HEADS	231
CAMSHAFT	231
❑ Checking cam lift and journal alignment	231
❑ Checking cylinder head mating surface	232
PRECOMBUSTION CHAMBERS	233
❑ Dismantling	233
❑ Fitting	233
GLOW PLUGS	234
❑ Dismantling	234
❑ Checking glow plugs continuity	234
❑ Fitting	234
LUBRICATION	234
❑ Heat exchanger	234
❑ Oil vapour full recirculation system (Blow-by)	235

Page

COOLING SYSTEM 236

❑ Thermostat 236

EXHAUST GAS RECIRCULATION SYSTEM E.G.R. 237

❑ General Information 237

❑ Operation 237

❑ Modulating solenoid valve 239

❑ Potentiometer on injection pump lever 239

❑ Engine rpm sensor 239

❑ Engine coolant temperature sensor 240

❑ Absolute pressure sensor 240

❑ Vacuum sensor 240

❑ Electronic control unit 240

OPERATION LOGICS 241

❑ Air conditioner interface operation logic 241

❑ Pre-Post Heating Operating Logic 241

❑ Engine Cooling Fan Operating Logic 241

❑ KSB Operating Logic 241

FEEDING 243

EMISSIONS VALUES

Figure 15

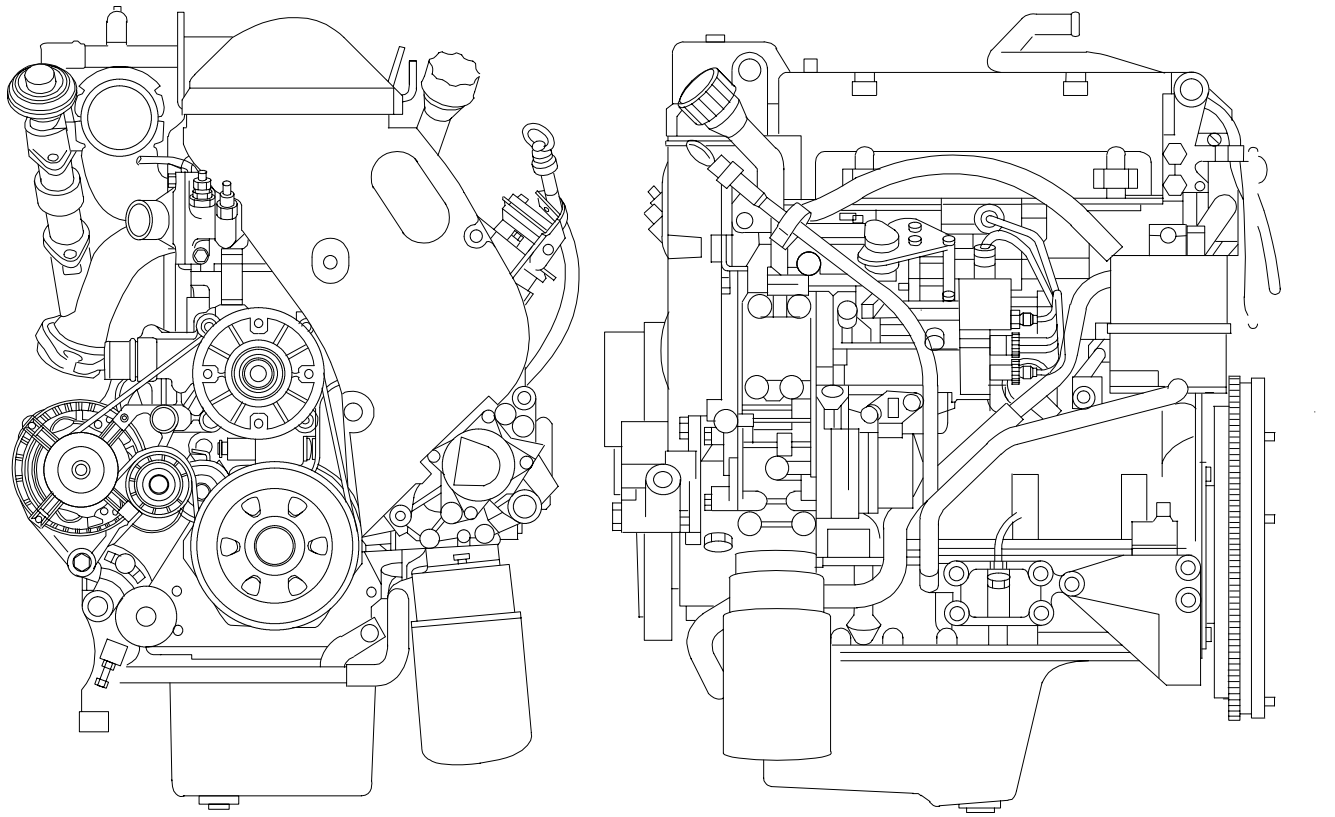

52182

Gas emissions

Engine 8140.63 conforms with the ECE 96/69 standard (measurement with vehicle on roller test bench according to ECE + EUDC cycle), with the following limits:

- CO (carbon monoxide) < 1.36 g/km
- HC+NOx (hydrocarbons + nitrogen oxide) < 1.20 g/km
- Particulate < 0.14 g/km

Test conditions: assigned coast-down 12.7 kW at 80 km/h. Reference weight of vehicle 2270 kg, vehicle equipped with EGR system and oxidation catalyst:

- Degussa 1.5 l-300 cpsl-V50-2g Pt
- Kemira 1.5 l-300 cpsl-7007-1g Pt

Test fuel: CEC RFT 73 - T - 90 - S ≤ 0.05 %.

Smokiness

Engine 8140.63 conforms with the limits of smokiness required by EEC standards 72/306 and R 24-03 with the following exhaust smokiness values:

Maximum power (Bosch BSU opacimeter degrees)	2.0
Maximum torque (Bosch BSU opacimeter degrees)	3.5
Full load at 1000 rpm (Bosch BSU opacimeter degrees)	3.5

Noise emissions

Maximum mean noise level, Lpa, of the standard engines measured according to ISO Std. 3745 (microphones at 1 m from the engine surfaces):

Idling	(800 rpm)	dB A 79
Full power	(3800 rpm)	dB A 99

GENERAL SPECIFICATIONS

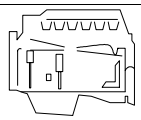	Type	**8140.63.4..** **PC/NA**
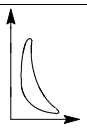	Cycle	Diesel 4 strokes
	Feeding	Aspirated
	Injection	Indirect
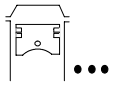	No. of cylinders	4 on-line
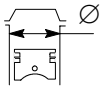	Diameter mm	94.4
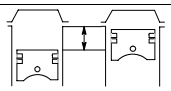	Stroke mm	100
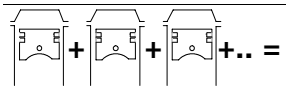	Total displacement cm^3	2800
	Compression ratio	21.7 ± 0.5
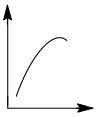	Max. power kW (HP)	58 ÷ 62 (78.9 ÷ 84.3)
	rpm	3800
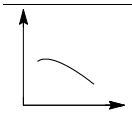	Max. torque Nm (kgm)	179 18.2
	rpm	2000
	Engine idling speed, no load rpm	800 ± 25
	Maximum engine speed, no load rpm	4400 ± 25
	Pressure at T.D.C. *bar	20 ÷ 26
	Minimum permissible pressure at T.D.C. *bar	16

(*) The pressure value is recorded by turning the engine over with the electric starter motor, with oil temperature at 40°- 50°C and the injection pump in the stop condition.

ID = Direct injection
NA = Aspirated
PC = Indirect injection (pre-chamber)
TCA = Supercharging with intercooler

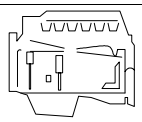	Type	**8140.63.4..** **PC/NA**
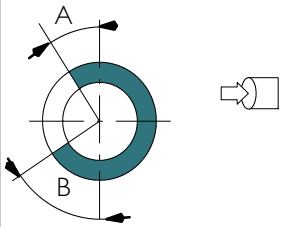	VALVE TIMING opens before T.D.C. A closes after B.D.C. B	 8° 48°
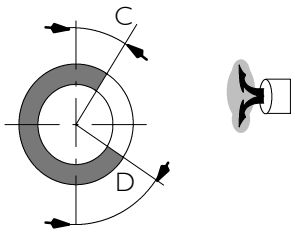	opens before B.D.C. D closes after T.D.C. C	48° 8°
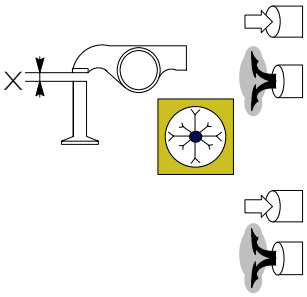	For timing check X mm mm Running X mm mm	 0.5 ± 0.05 0.5 ± 0.05 0.5 ± 0.05 0.5 ± 0.05
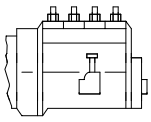	FUEL SUPPLY Bosch type injection pump Speed governor Cold start	 rotating distributor VER 808 - 2 (with immobilizer) min. and max. K.S.B. electrical, mechanical
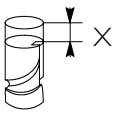	Pump arrangement With piston n. 1 at T.D.C. Start of delivery mm	 0.94 ± 0.05
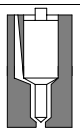	BOSCH injector nozzle type	KGM DNO SACLESS
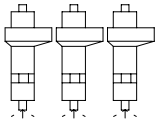	Injection order - injection pump - engine	 A - B - C - D 1 - 3 - 4 - 2
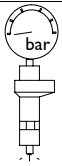	Injection pressure bar	130 + 8

* When checking, for any values of less than 200 bars, calibrate the injectors at 230 + 8 bar.

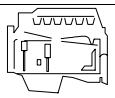	Type		**8140.63.4..** **PC/NA**
	LUBRICATION		Forced feed by gear pump, relief valve, dual action oil filter
 	Oil pressure, engine hot at idling speed at maximum speed	 bar bar	 ⩾ 0.8 ⩾3.5
COOLING			With a centrifuge pump, driven by the crankshaft via a poly-V belt, thermostat for adjustment, fan with electro-magnetic clutch, radiator.
	Thermostat: starts to open: fully open:		 79° C ± 2° C 110° C
 Urania[c] Urania Turbo Urania Turbo LD	OIL REPLENISHMENT Total capacity at 1st filling Quantity at periodical replacements: - engine sump 	 liters kg liters kg	 6.9 6.1 5.2 4.6
 Urania[c] Urania Turbo Urania Turbo LD	- engine sump 	 liters kg	 6.3 5.7

ASSEMBLY DATA - CLEARANCES

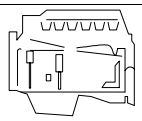	Type	**8140.63.4..** **PC/NA**
CYLINDER BLOCK AND CRANK MECHANISM COMPONENTS		
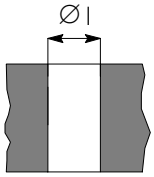	Bores for cylinder liners Ø 1	97.39 ÷ 97.45*
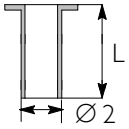	Cylinder liners: outside diameter Ø 2 length L	** 97.47 ÷ 97.50 167.00 ÷ 167.30
	Cylinder liners - crankcase bores (negative allowance)	0.02 ÷ 0.11
	Outside diameter Ø 2	0.2
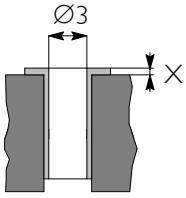	Cylinder barrels: (protrusion from engine block bottom)	0.005 max
	inside diameter Ø 3	94.402 ÷ 94.432
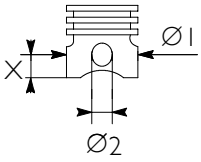	Pistons: supplied as spare parts type: measuring dimension X outside diameter Ø 1 pin bore Ø 2	MONDIAL PISTON 13 94.306 ÷ 94.320 32.000 ÷ 32.005
	Piston - cylinder sleeve	0.082 ÷ 0.126
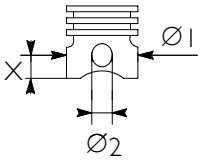	Pistons: supplied as spare parts type: measuring dimension X outside diameter Ø 1 pin bore Ø 2	AE GOETZE 13 94.306 ÷ 94.320 32.000 ÷ 32.005
	Piston - cylinder sleeve	0.082 ÷ 0.126
	Piston diameter Ø 1	0.4
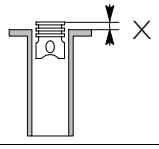	Pistons protrusion X	0.75 ÷ 1.15
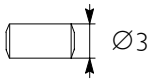	Gudgeon pin Ø 3	31.990 ÷ 31.996
	Gudgeon pin - pin housing	0.004 ÷ 0.015

* Diameter to be obtained at servicing when fitting spare cylinder barrels.
** Supplied as spare parts.

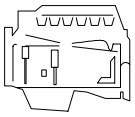	Type	**8140.63.4..** **PC/NA**
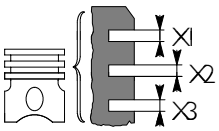	Piston type	MONDIAL PISTON/AE GOETZE
	X1*	2.685 ÷ 2.715
	Piston ring grooves X2	2.050 ÷ 2.070
	X3	2.540 ÷ 2.560
	* measured on Ø of 91.4 mm	
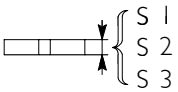	S 1*	2.568 ÷ 2.597
	Piston rings S 2	1.970 ÷ 1.995
	S 3	2.470 ÷ 2.490
	* measured on Ø of 91.4 mm	
	1	0.088 ÷ 0.147
	Piston rings - grooves 2	0.55 ÷ 0.100
	3	0.05 ÷ 0.09
	Piston rings	0.4
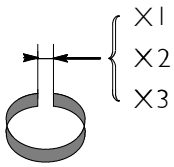	Piston ring end gap in cylinder liners	
	X1	0.20 ÷ 0.35
	X2	0.30 ÷ 0.50
	X3	0.30 ÷ 0.55
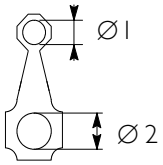	Small end bush housing Ø 1	35.460 ÷ 35.490
	Big end bearing housing * Ø 2	60.341 ÷ 60.348
	* spare connecting rod supplied	
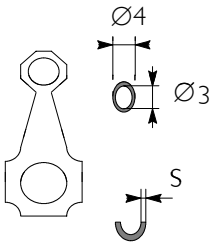	Small end bush diameter	
	outside Ø 4	35.570 ÷ 35.595
	inside Ø 3	32.010 ÷ 32.020
	Big end bearing shell supplied as spare parts S	1.875 ÷ 1.884
	Small end bush - housing	0.08 ÷ 0.135
	Piston pin - bush	0.014 ÷ 0.03
	Piston rings	0.254 ÷ 0.508

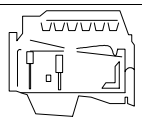	Type	**8140.63.4..** **PC/NA**
CYLINDER HEADS - VALVE GEAR		
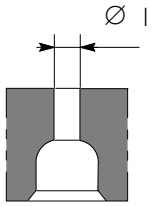	Valve guide housings in the cylinder heads Ø1	12.950 ÷ 12.985
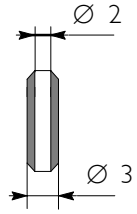	Valve guide Ø2 Ø3	8.023 ÷ 8.038 13.012 ÷ 13.025
	Valve guides and housings in the cylinder heads	0.027 ÷ 0.075
IVECO PARTS >	Valve guide	0.05 - 0.10 - 0.2
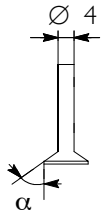	Valves: Ø4 α Ø4 α	7.985 ÷ 8.000 60° 15′ ± 7′ 30″ 7.985 ÷ 8.000 45° 30′ ± 7′ 30″
	Valve stem and its guide	0.023 ÷ 0.053
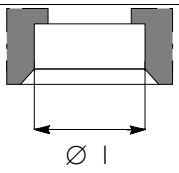	Housing in head for valve seat Ø1 Ø1	44.025 ÷ 44.075 37.380 ÷ 37.415
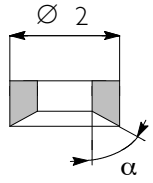	Outside diameter of valve seat; angle of valve seat in cylinder head: Ø2 α Ø2 α	44.145 ÷ 44.160 60° ± 5′ 37.495 ÷ 37.510 45° ± 5′
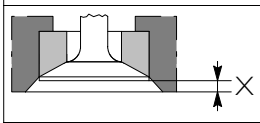	Recessing of valve X	X 1.15 ÷ 1.45 1.0 ÷ 1.3

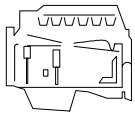	Type	**8140.63.4..** **PC/NA**
CYLINDER BLOCK AND CRANK MECHANISM COMPONENTS		
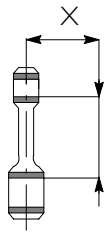	Measuring dimension X Max. connecting rod axis misalignment tolerance =	125 0.07
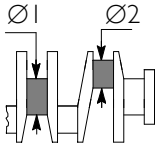 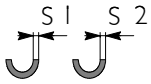	Main journals Ø 1 n° 1 - 2 - 3 - 4 n° 5 Crankpins Ø 2 Main bearing shells S1* Big end bearing shells S2* * supplied as spare parts	 80.182 ÷ 80.208 86.182 ÷ 86.208 56.515 ÷ 56.538 2.165 ÷ 2.174 1.875 ÷ 1.884
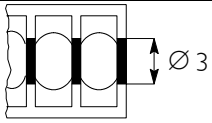	Main bearings Ø 3 n° 1 - 2 - 3 - 4 n° 5	 84.588 ÷ 84.614 90.588 ÷ 90.614
	Bearing shells - main journals	0.032 ÷ 0.102
	Bearing shells - big ends	0.035 ÷ 0.083
 	Main bearing shells Big end bearing shells	0.254 ÷ 0.508 0.254 ÷ 0.508
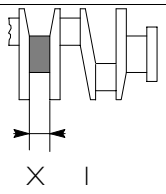	Main journal, thrust bearing X 1	31.000 ÷ 31.100
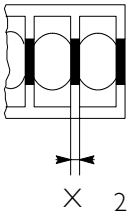	Main bearing housing, thrust bearing X 2	26.500 ÷ 26.550
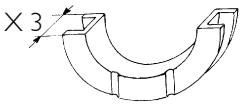	Thrust washer halves X 3	30.900 ÷ 30.950
	Crankshaft end float	0.060 ÷ 0.310

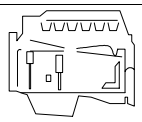	Type	**8140.63.4..** **PC/NA**
CYLINDER HEADS - VALVE GEAR		
	Between valve seat and head 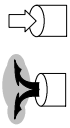	0.070 ÷ 0.145 0.080 ÷ 0.130
IVECO PARTS 	Valve seats	-
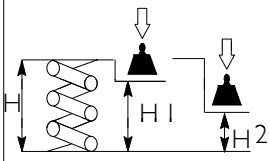	Valve outside spring height: free height H under a load of: kg 43.8 ± 2.5 H1 kg 77.4 ± 4 H2	 52 38.5 28.5
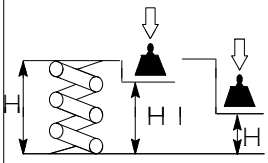	Valve inside spring height: free height H under a load of: kg 16.4 ± 1 H1 kg 30 ± 1.5 H2	 45.5 33.5 23.5
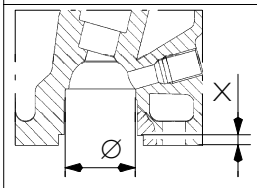	Height of precombustion chamber plug base seat X A B C Precombustion chamber plug seat Ø	5.348 ÷ 5.373 5.373 ÷ 5.398 5.398 ÷ 5.423 32.490 ÷ 32.540
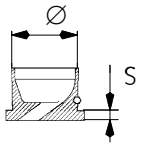	Precombustion chamber plug Ø S A Green B - C Yellow	32.550 ÷ 32.570 5.373 ÷ 5.397 5.398 ÷ 5.422 5.423 ÷ 5.447
	Precombustion chamber plug - Cylinder heads	0.010 ÷ 0.080
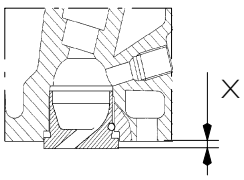	Precombustion chamber position from cylinders heads level surface	-0.000 ÷ +0.049
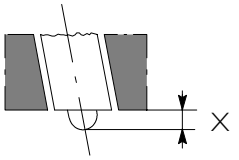	Injector protrusion X	-

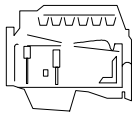	Type	**8140.63.4.3XX** **PC/NA**
CYLINDER HEADS - VALVE GEAR		
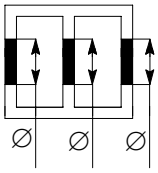	Camshaft bearing housing normal Ø oversized Ø	 33.985 ÷ 34.015 34.185 ÷ 34.215
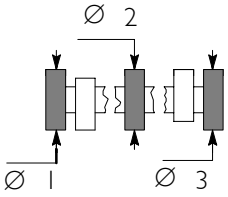	Camshaft bearing journals normal Ø oversized Ø	 33.934 ÷ 33.950 34.134 ÷ 34.150
	Between seats and supporting pins	0.035 ÷ 0.081
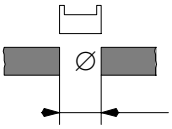	Tappets housing on cylinder heads Ø normal	 44.000 ÷ 44.025
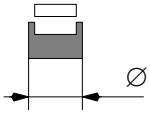	Tappet Ø normal	43.950 ÷ 43.970
	Between tappets and seats	0.030 ÷ 0.075
	Cap	3.25 to 4.45 mm with a progression of 0.05
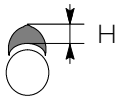 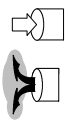	Cam lift: H H	 10.5 10.5

TIGHTENING TORQUES



This differs from the analogous section for the 8140.43C engine in the following tightening torques.

PART	TORQUE	
	Nm	kgm
Nut M12x1.5 fixing toothed bushing to the injection pump	55	5.5
Fixing incandescent glow plugs	25	2.5
Nut fixing electric cable to the glow plug	60	6
Injector fastening	1.5 ÷ 2	0.15 ÷ 0.2

TOOLS

This differs from the analogous section for the 8140.43C engine in the exclusion of tools 99360486 - 99367121 - 99394038 and the addition of the following tools.

TOOL NO.		DESCRIPTION
99360498	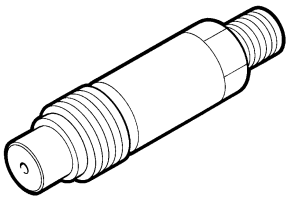	Cylinder compression test coupling (use with 99395682)

Figure 16

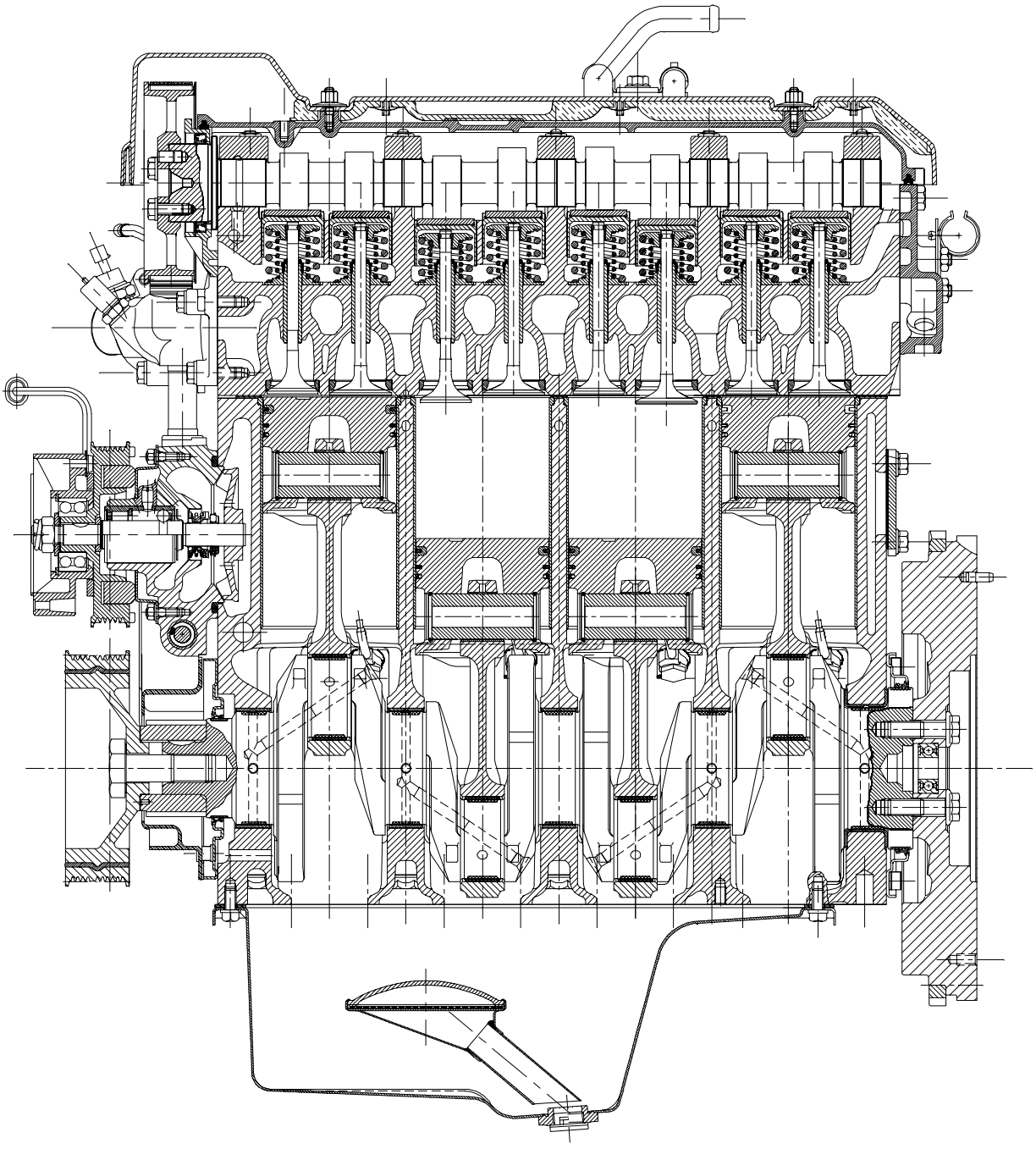

8140.63.4... ENGINE LONGITUDINAL SECTION

Figure 17

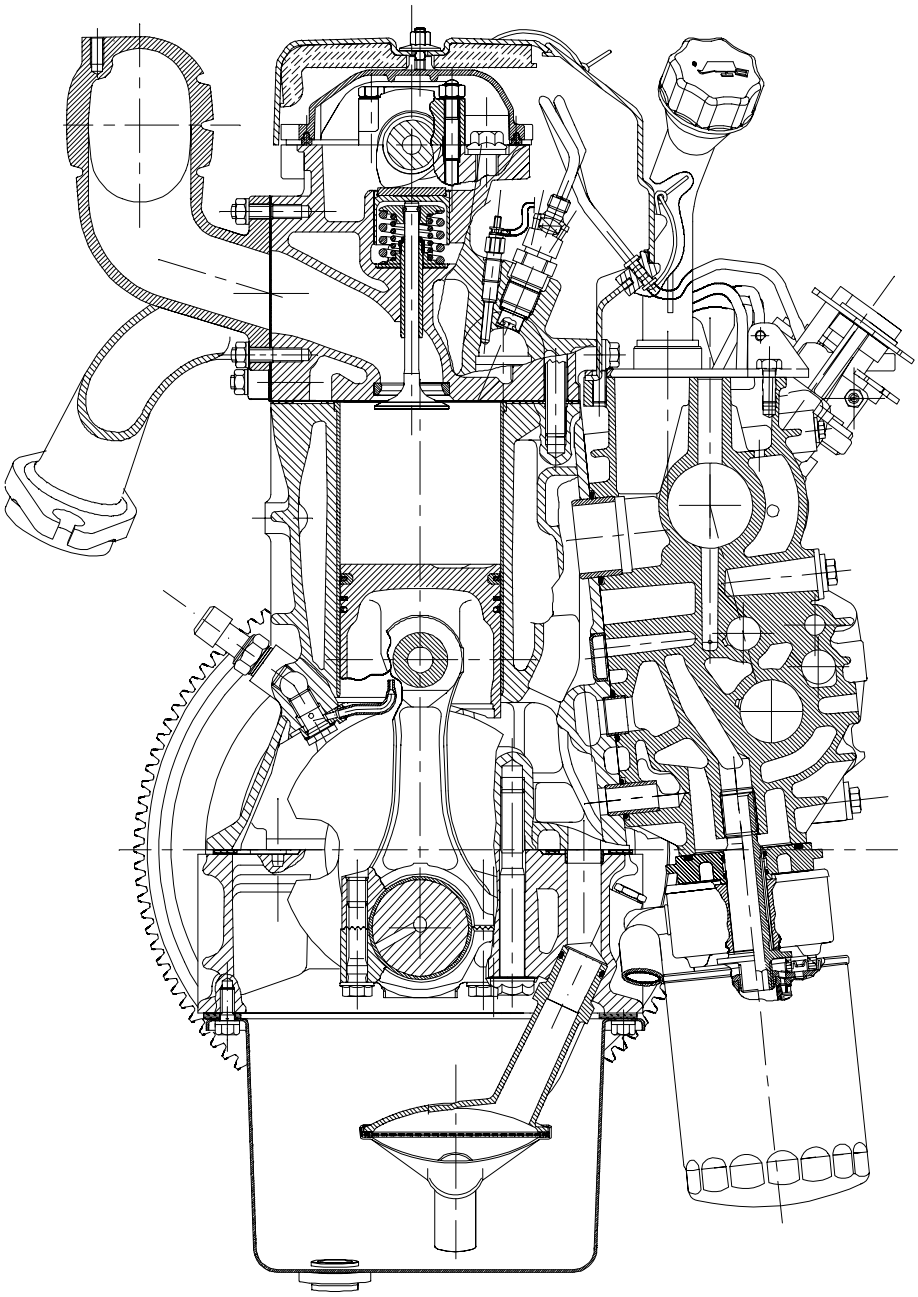

52181

8140.63.4... ENGINE TRANSVERSE SECTION

8140.63 ENGINE OVERHAUL

This differs from overhauling engine 8140.43.C in the following.

Dismantling engine on bench

Figure 18

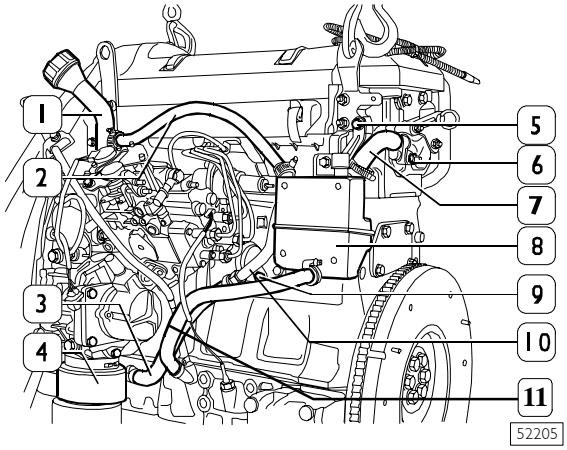

To be able to apply the brackets 99361029 to the crankcase for securing the engine to the stand for overhauling, it is necessary:

on the left-hand side of the engine:

- ❑ to disconnect the pipe (3) from the heat exchanger (4);
- ❑ to disconnect the pipe (7) from the side cover (6);
- ❑ to take out the screws (5 and 9) and remove the pipe (10) complete with pipes (3 and 7);
- ❑ to disconnect the pipe (11) from the crankcase fitting;
- ❑ to disconnect the pipe (2) from the fillpipe (1);
- ❑ to remove the oil vapour condenser (8) complete with pipes (2 - 10 - 11).

Figure 19

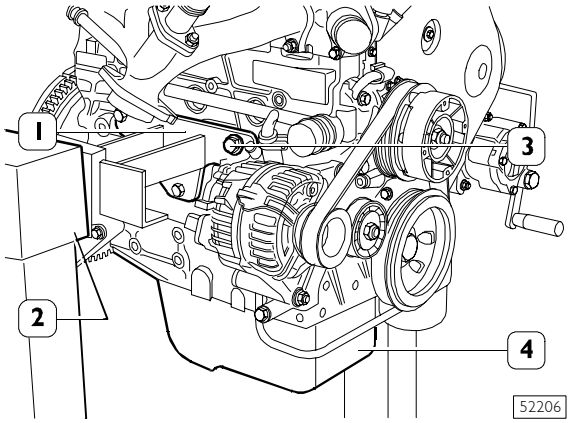

On the right-hand side, take the plug out of the crankcase to be able to screw down the screw (3) fixing the bracket 99361029 (1) and to mount this bracket.
Mount the other bracket on the left-hand side of the crankcase and secure them to the rotary stand 99322230 (2).
Take the plug out of the oil sump (4) and drain off the lubricating oil.

Figure 20

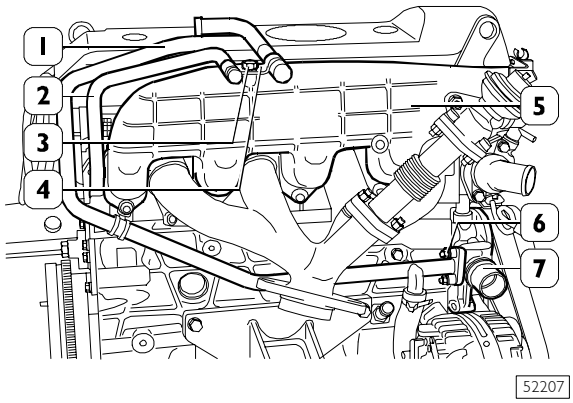

Take out the screw (3) fixing the bracket (4) securing the pipes (1 and 2) to the intake manifold (5).
Disconnect the pipe (2) from the cylinder head.
Take out the nuts (6) securing the pipe (1) to the water pump (7).

Figure 21

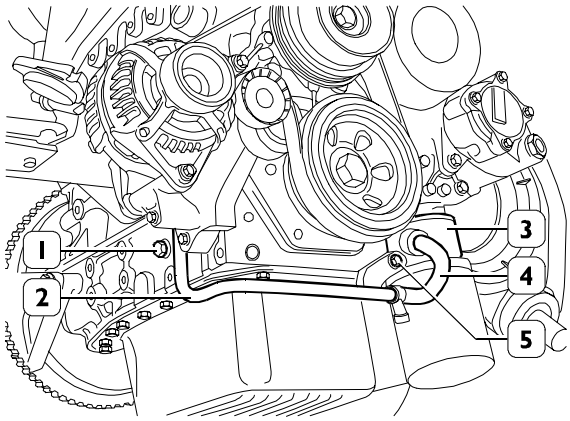

Disconnect the pipe (4) from the heat exchanger (3).
Take out the screws (1 and 5) and remove the pipe (2) from the crankcase complete with pipes (4) and pipes (1, Figure 20).

Figure 22

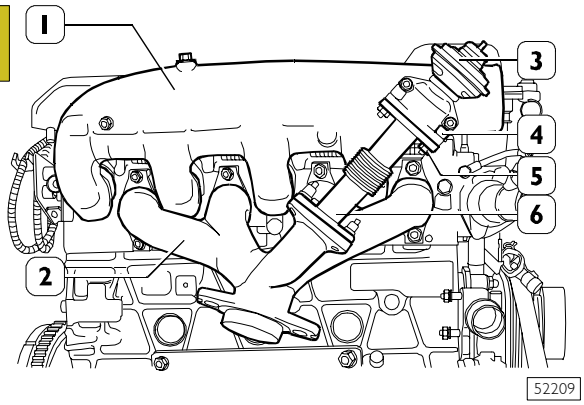

Take out the nuts (5) for the screws (4) and disconnect the EGR valve (3) from the sleeve (6).
Remove the intake manifold (1) and exhaust manifold (2) from the cylinder head.

Figure 23

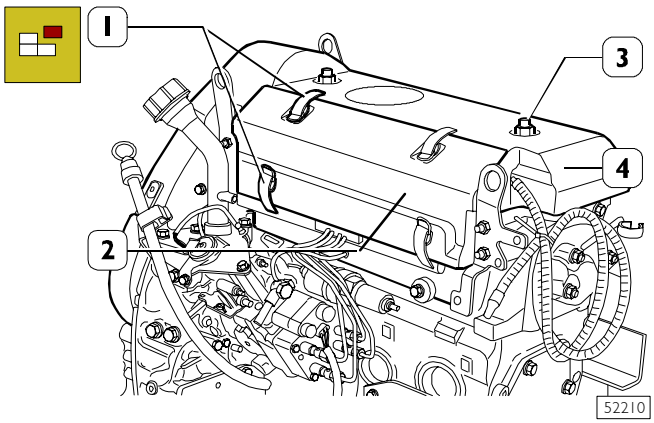

Lift the clips (1) and remove the side soundproofing guard (2).

Take out the nuts (3) and remove the top soundproofing guard (4).

Figure 24

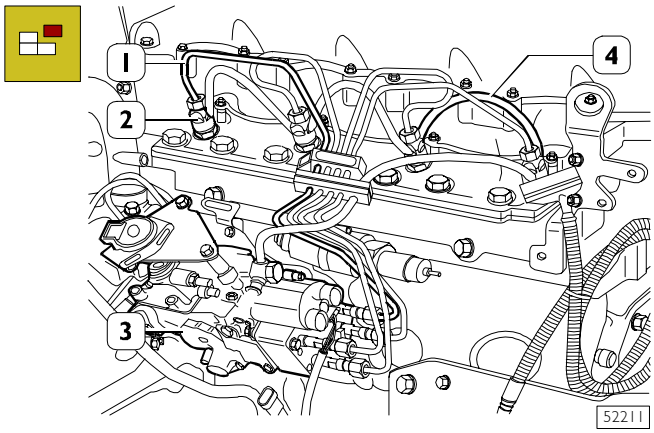

Remove the fuel pipes (1) from the injection pump (3) and from the injectors (2).

Remove the fuel recovery pipes (4) from the injectors (2).

Figure 25

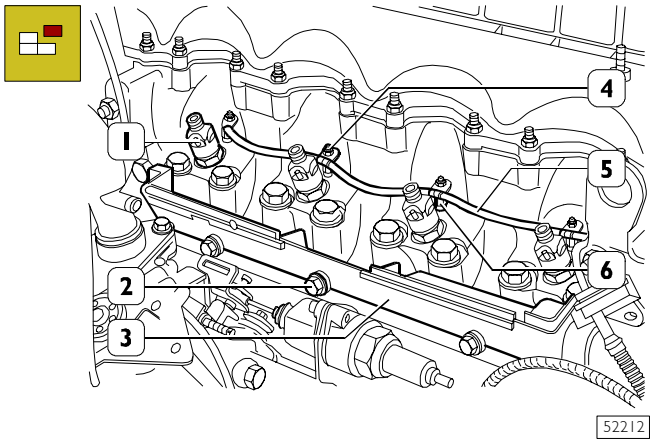

Take out the nuts (4) and disconnect the electric cable (5) from the glow plugs (6).

Unscrew and remove the injectors (1).

Take out the screws (2) and remove the guard (3).

Figure 26

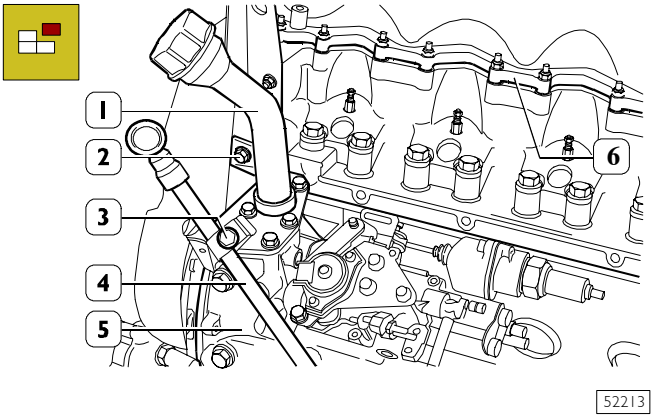

Remove the tappet cover (6) with its relative gasket.

Take out the screw (2) and remove the fillpipe (1) from the auxiliary member assembly (5).

Take out the screw (3) and extract the oil dipstick pipe (4) from the crankcase base.

Figure 27

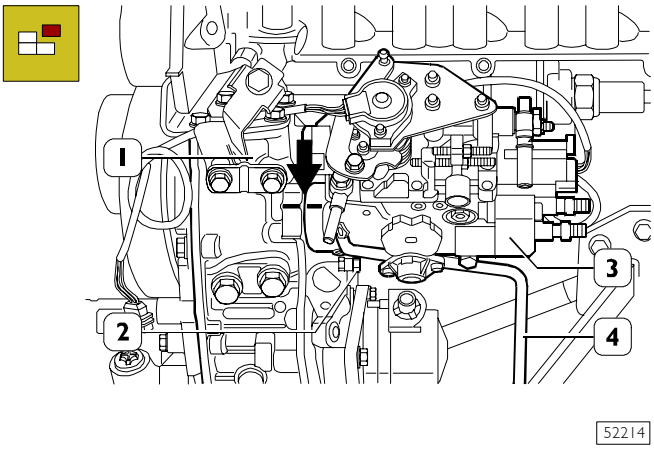

Mark (⇒) the position of assembly of the injection pump (3) on the auxiliary member assembly (1).

Take out the fixing nuts (2) and remove the injection pump (3) from the auxiliary member assembly (1).

To remove the lower fixing nut on the crankcase side, use wrench 99352114 (4).

Figure 28

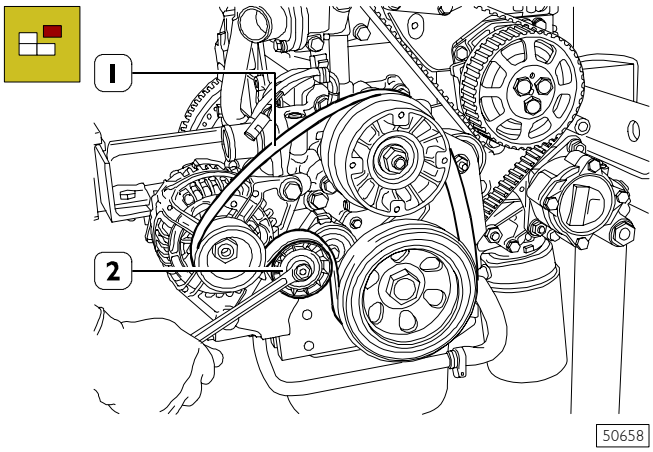

Using the right wrench on the tightener (2), slacken the tension of the belt (1) and remove it.

Figure 29

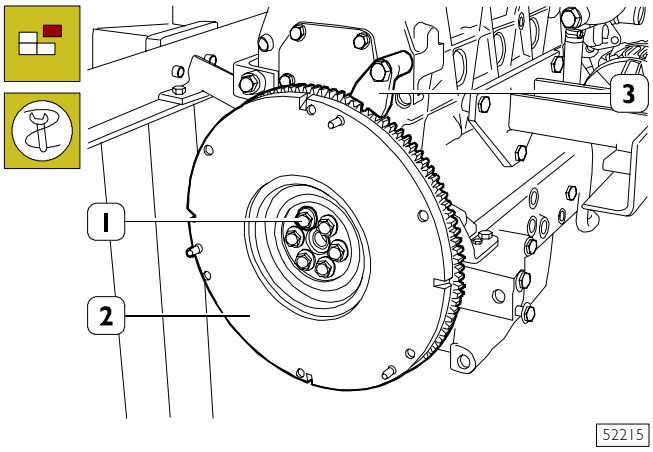

Using tool 99360306 (3) applied as illustrated in the figure, block crankshaft rotation and loosen the screws fixing (1) the flywheel (2).

Figure 30

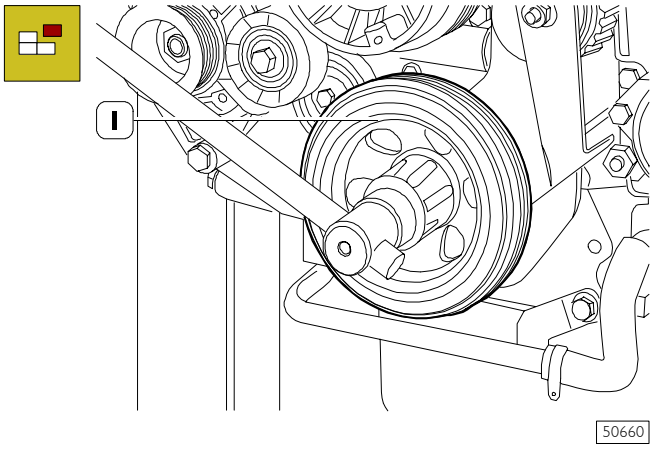

Remove the screw fixing the pulley (1) to the crankshaft.
Remove the pulley (1) from the crankshaft and the spacer, if any.

Figure 31

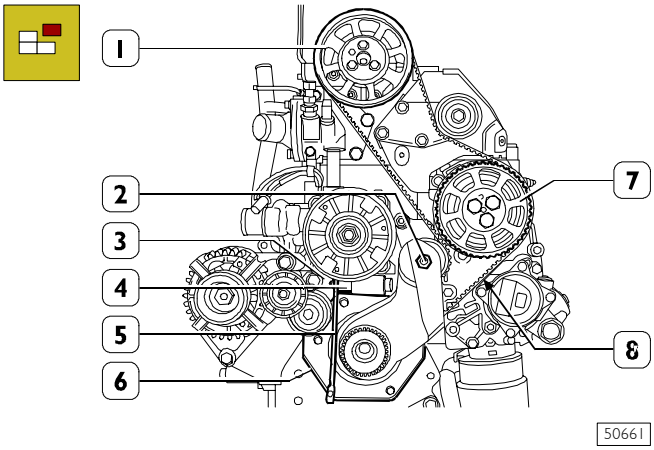

Loosen the screws fixing the gears (1 - 7).
Insert a special wrench between (5) the push rod (3) and the cylinder (4) of the tightener.
Take out the nut (2).
Remove the bottom cover (6).
Remove the cogged belt (8).

Figure 32

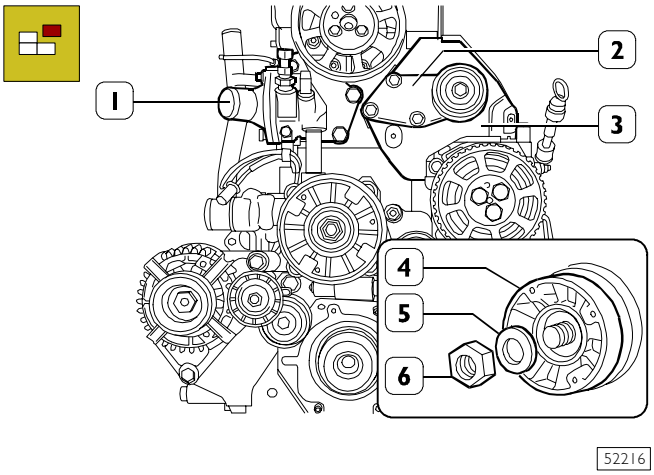

Remove the fixed tightener mounting (2) and the guard (3) beneath.
Remove the screws fixing the thermostat box (1).
Block rotation of the electromagnetic pulley.
Unscrew the nut (6) securing the hub (4) clockwise.
Remove the hub (4) and the washer (5).

The hub fastening nut (6) has a left-hand thread.

Figure 33

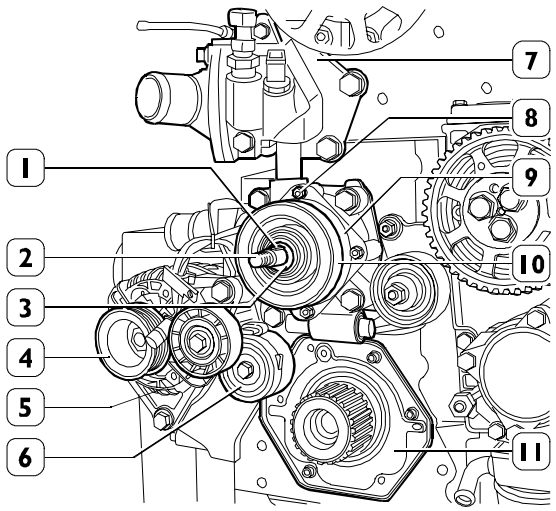

52217

Remove the key (1) and washer (3) from the water pump shaft (2).
Remove the pulley (10) from the water pump shaft (2).
Take out the nuts (8) and extract the electromagnetic coupling (9).
Remove the mounting (5) complete with alternator (4) from the crankcase and from the water pump (2), complete with thermostat box (7).
Remove the adjustable tightener (6).
Remove the front cover (11) of the crankshaft.

Figure 34

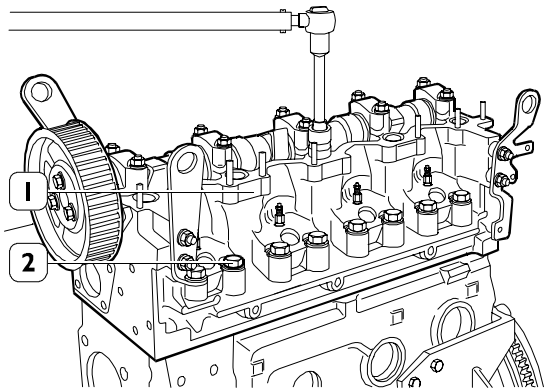

52218

Remove the screws (2) fixing the cylinder head (1) and remove this with the gasket from the crankcase.

Check piston protrusion as described in the relevant paragraph to verify the possibility of crankcase flattening in case it is deformed.

Figure 35

PISTONS - PINS - SNAP RINGS

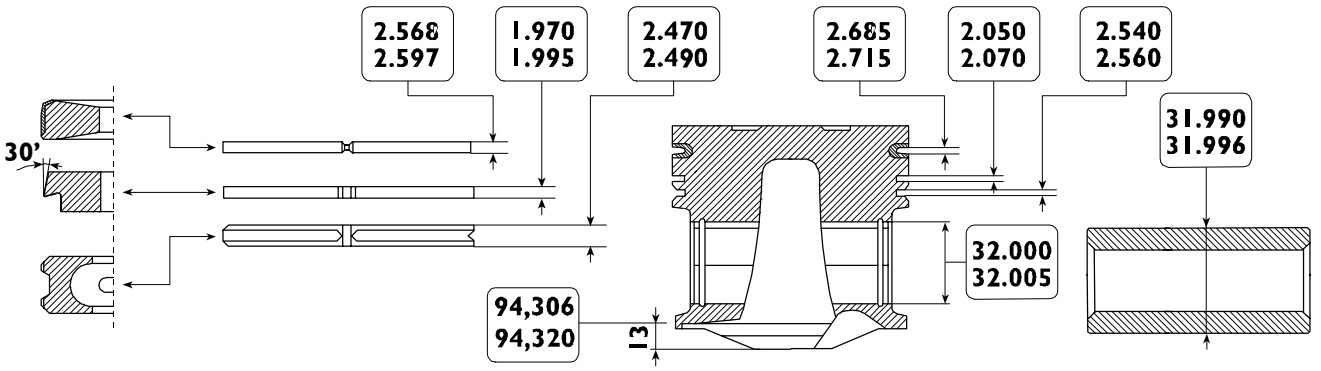

62083

MAIN DATA OF MONDIAL PISTONS FEDERAL MOGUL, PINS AND RINGS OF THE 8140.63... ENGINE

* This dimension is measured on the diameter of 91.4 mm.

Assembling connecting rod-piston assembly

Fitting connecting rods-pistons

Figure 36

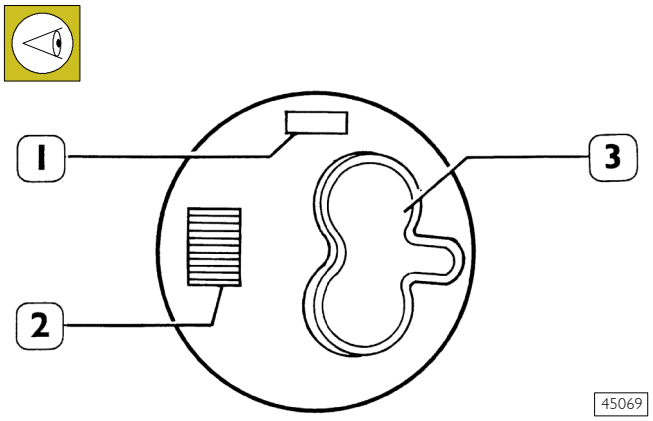

On the crown of the piston, reference (1) indicates the type of engine (7), class selection (A) and supplier (X)*; reference (2) has an adhesive label (on the piston supplied as a spare) with the code number for optical reading of the type of engine and class selection; reference (3); piston crown cavity.

* X = AE GOETZE
Y = MONDIAL PISTON

Figure 37

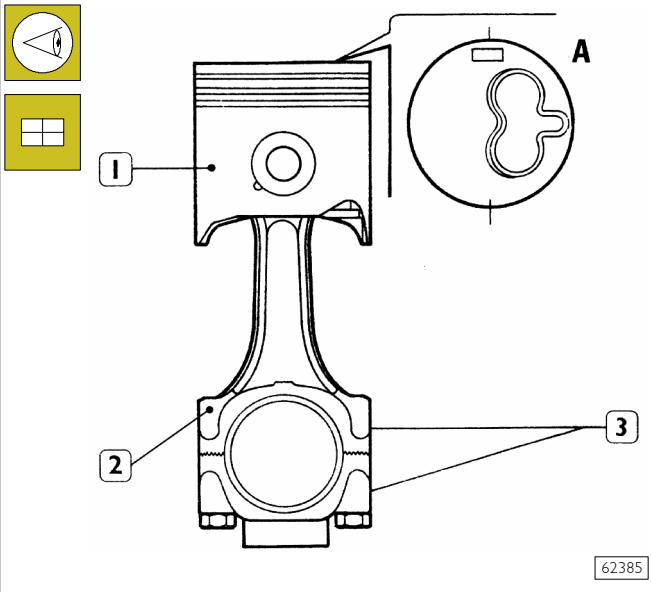

Fit piston (1) to connecting rod (2) so as piston assembly reference and connecting rod numbers (3) can be seen as shown in the figure.

560610 CYLINDER HEADS

541210 CAMSHAFT

541211 Checking cam lift and journal alignment

Figure 38

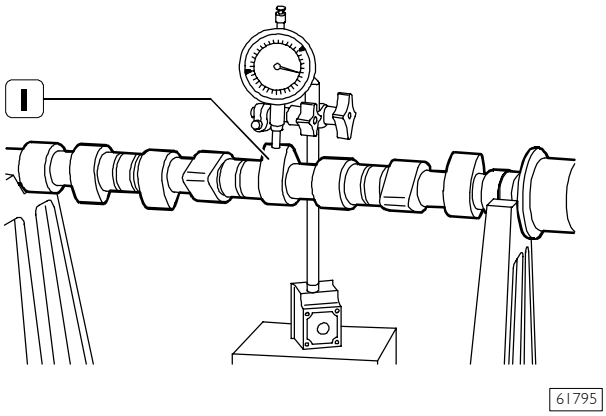

Set shaft on centres and check, with a centesimal dial gauge placed on central support, that alignment error is no greater than 0.04 mm, otherwise replace shaft. Also check cams (1) lift: it should be 10.5 mm; if different values are found replace the shaft.

Figure 39

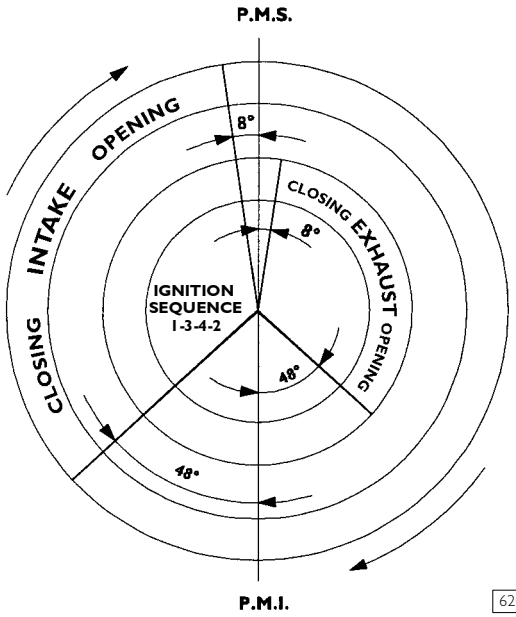

DIAGRAM OPENING-CLOSING VALVE

Figure 40

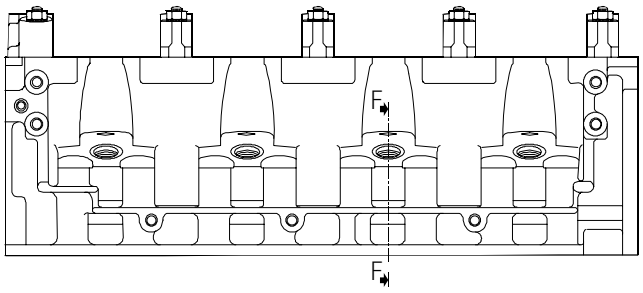

49074

Figure 43

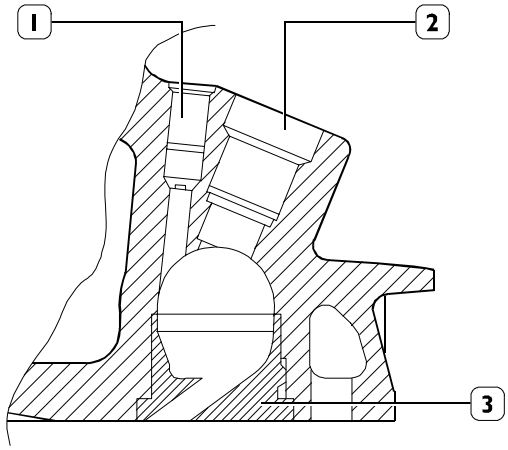

49076

SECTION F-F

1. Glow plug - 2. Injector seat - 3. Combustion prechamber plug

Figure 41

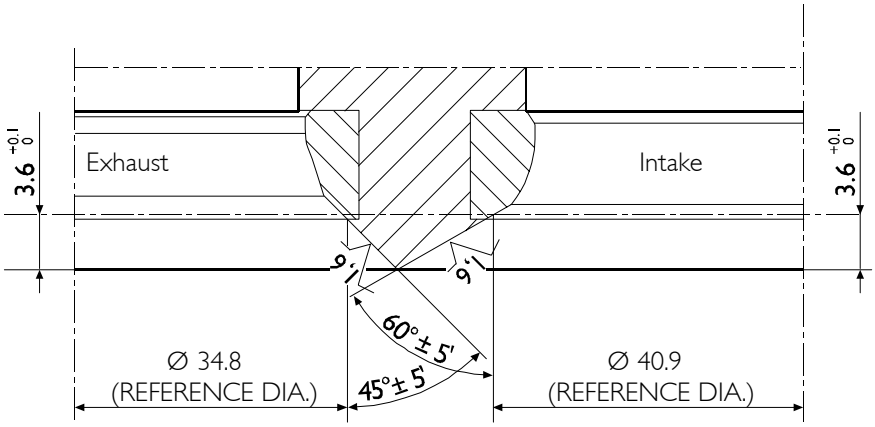

49075

MAIN DATA - VALVE SEATS

Checking cylinder head mating surface

Figure 42

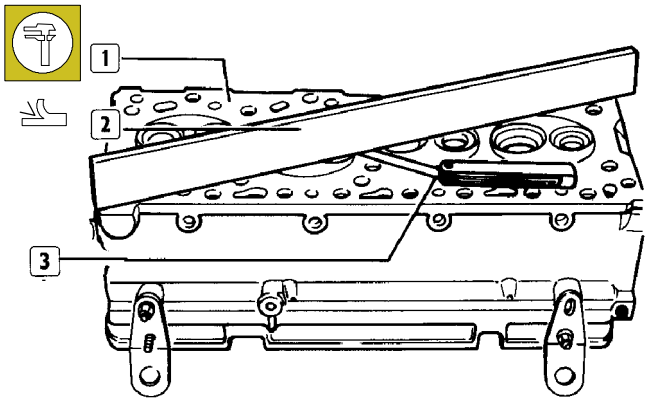

18879

The check of mating surface of the head (1) to cylinder group is performed by means of a rule (2) and a thickness gauge (3). If a deformation is found, measure cylinder head thickness, whose rated value is 150 ± 0.1 mm.

When checking, if the amount of material to be removed for flattening cylinder head is greater than 0.4 mm, replace cylinder head.

If the amount of material to be removed is within 0.2 mm there is no need to dismantle combustion prechamber plugs, otherwise proceed as stated in the following figure.

PRECOMBUSTION CHAMBERS
Dismantling

Figure 44

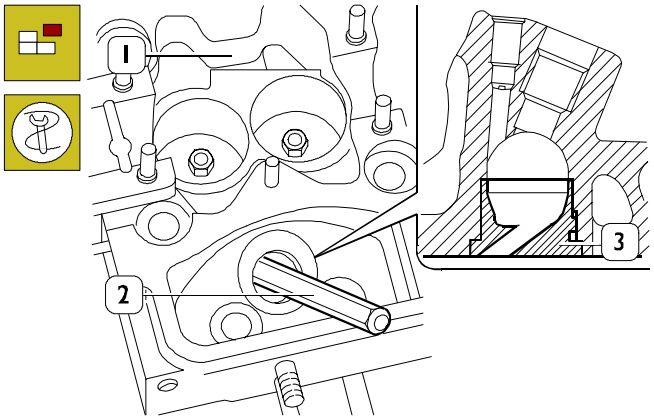

52219

Number the pre-combustion chambers (3) in order to refit them in the same order of disassembly and remove them from the cylinder head (1) taking special care with a suitable punch (2).

Fitting

Figure 45

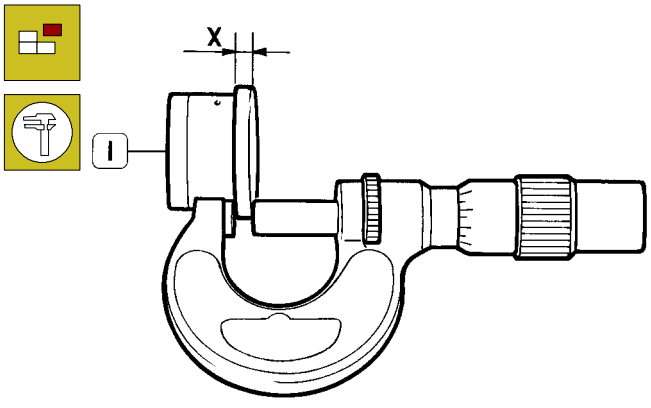

41802

Precombustion chambers (1) are subdivided into classes according to base thickness X and selected as follows:

Class	X mm
A	4.500 ÷ 4.520
B	4.520 ÷ 4.540
C	4.540 ÷ 4.560

Should it be required to replace one or more precombustion chambers (1) (being not necessary to regrind respective seats on cylinder heads), measure thickness X of their base to fit the new part of same class and in the same order found upon dismantling.

Figure 46

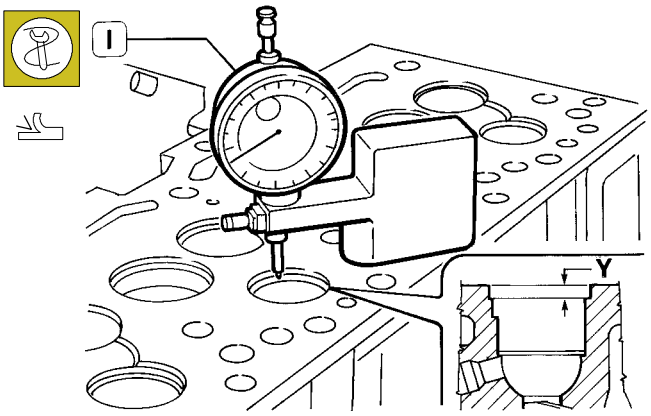

41803

After cylinder heads regrinding, with material removal of more than 0.2 mm thickness, measure with dial gauge (1) the depth Y of pre-combustion chamber seats.
According to the class of the pre-combustion chambers, shown in the previous figure, restore depth Y of respective seats, to the corresponding classes listed here below:

Class	depth Y mm
A	4.480 ÷ 4.505
B	4.505 ÷ 4.530
C	4.530 ÷ 4.555

Figure 47

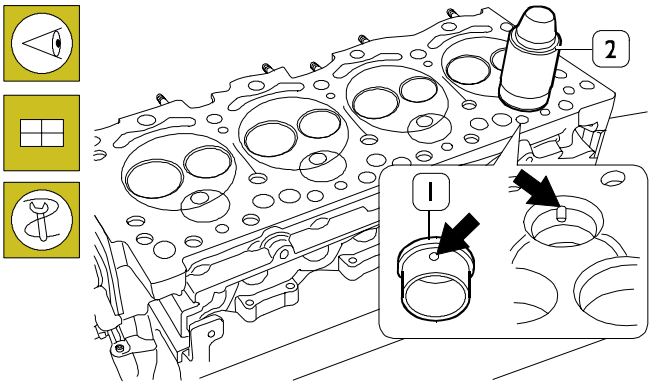

52189

Precombustion chamber (1) plugs driving is carried out with tool 99360356 (2), making their centring balls (←) coincide with the milling (→) of relevant seat on cylinder heads.

GLOW PLUGS
Dismantling

Figure 48

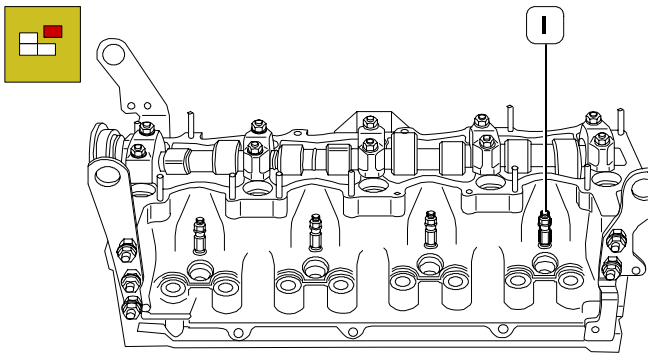

52220

Remove glow plugs (1) from cylinder heads.

Checking glow plugs continuity

Figure 49

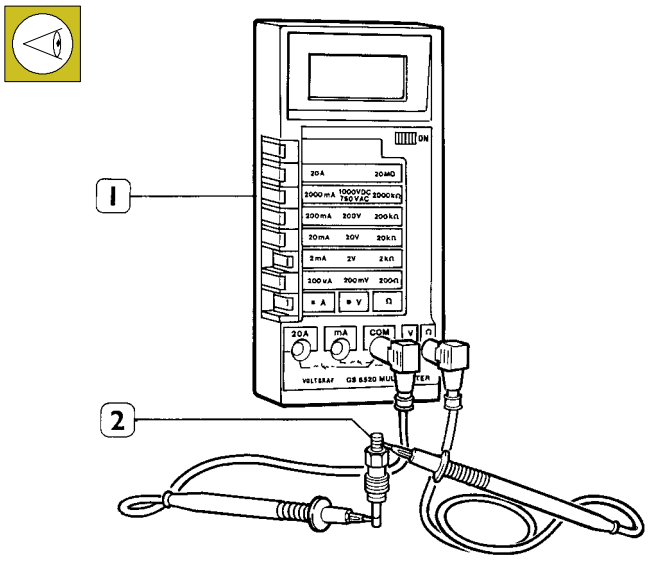

41807

Check the efficiency of each single glow plug (2) by connecting the two tester terminals (1) to glow plug terminals and verify its continuity, otherwise replace glow plug.

Fitting

Fit incandescence plugs to the cylinder head and tighten them to a torque of 15 ÷ 1 Nm (1.5 ÷ 0,1 kgm).

Re-check continuity after fitting glow plugs, since deforming effect, due to assembly pressure, may cause the interruption of said continuity

Figure 50

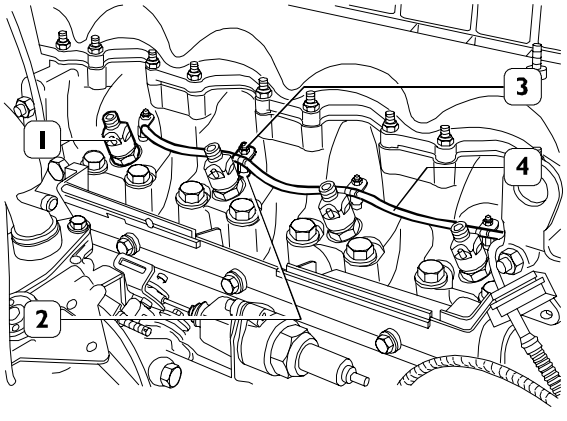

52222

Screw the injectors (1) into the cylinder head and, with the right wrench, tighten them to the required torque.
Fit the glow plugs (2) and electric cable (4), and tighten the fixing nuts (3) to the required torque.

LUBRICATION

543110 Heat exchanger

Figure 51

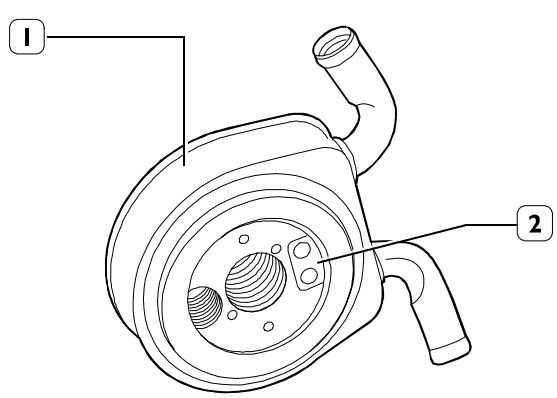

50681

10-element heat exchanger

On supplying heat exchanger (1) with air at 1 bar pressure, verify that no leaks exist from oil flow side (2) and also from water flow side.

Test conditions:

Oil type	SAE 30
Oil temperature at heat exchanger inlet	115°C
Oil delivery	30 litres/minute
Water temperature at heat exchanger inlet	85°C
Water delivery	20 litres/minute
PERFORMANCE	
Exchanged heat quantity	5.0 kW
Oil pressure drop	0.85 bar
Built-in safety valve (2)	
Opening pressure	0.82 ÷ 1.03 bars

540480 Oil vapour full recirculation system (Blow-by)

Figure 52

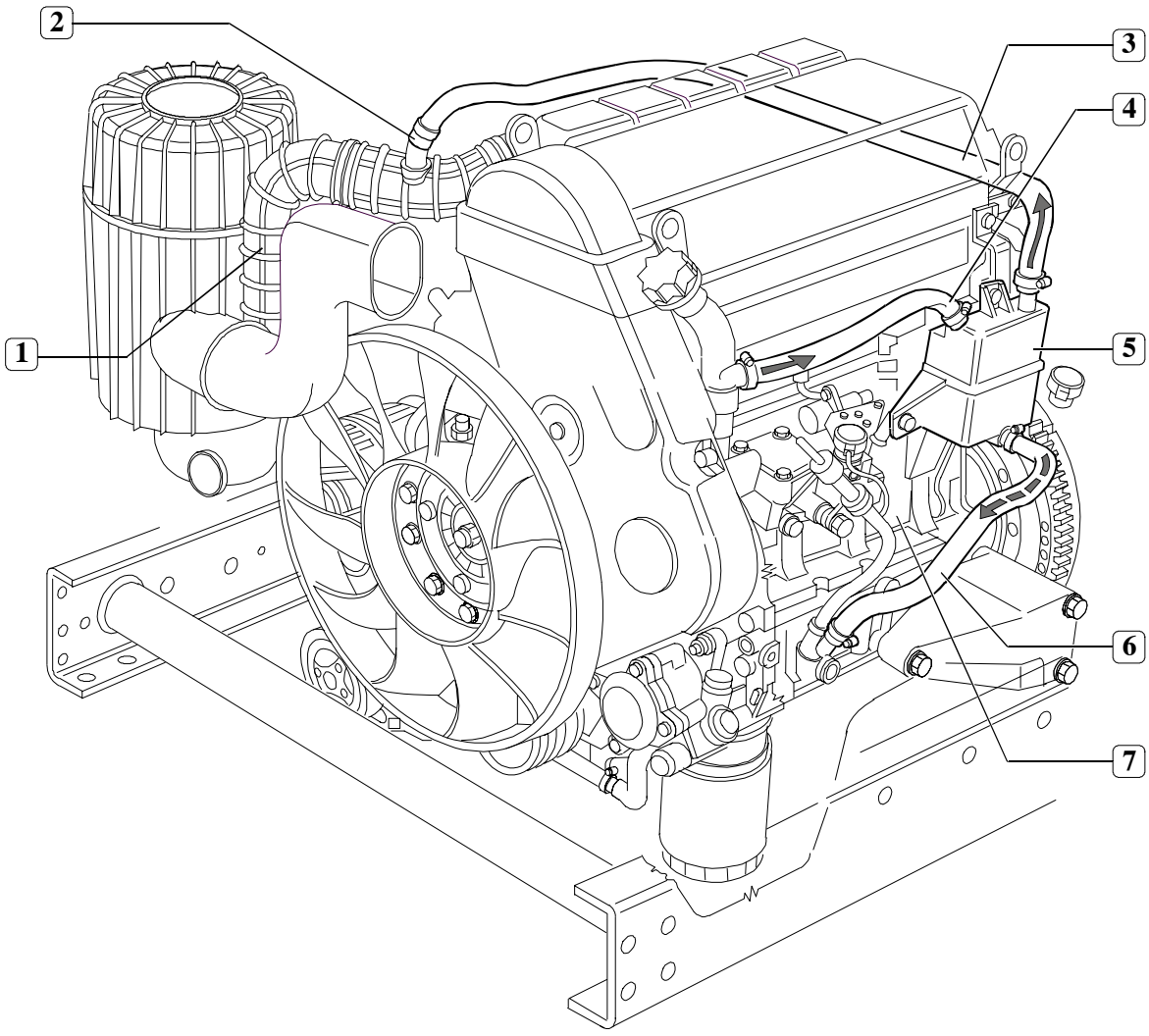

OIL VAPOUR FULL RÉCIRCULATION SYSTEM DIAGRAM (8140.63 engine)
1. Suction conveyer - 2. Flow relief valve - 3. Delivery pipe - 4. Oil vapour outlet pipe - 5. Oil vapour condenser - 6. Oil drainage pipe - 7. Crankcase

The vapours that develop in the sump during engine operation, are collected in a condenser (5).
A portion of such vapours condense and, through pipe (6), return in the sump, while the remaining portion, through pipe (3) is sucked by engine and burnt.
The flow of vapours sucked by engine, is controlled by a relief valve (2).

This valve, applied on pipe (3) in proximity to suction conveyer (1), limits the flow of vapours, by choking flowing section according to the vacuum existing in suction pipe.
In this way most of the vapours will return in the sump.

5432 COOLING SYSTEM
543250 Thermostat

Figure 53

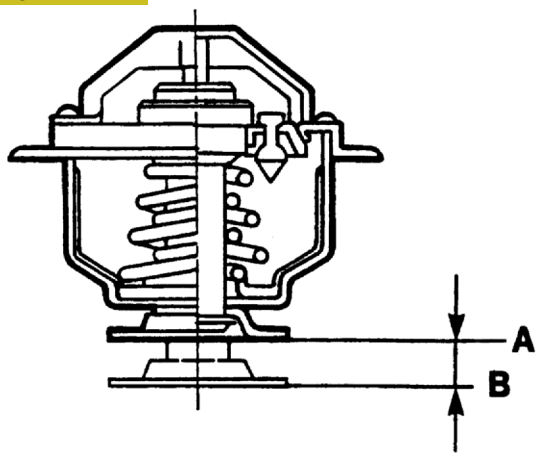

A. Stroke start 79 °C ± 2 °C.
B. Stroke at 94 °C ≥ 7 mm
Stroke at 110 °C ≤ 10.5 mm
7 mm stroke in < 60"

Water blow-by with thermostat closed and valve closed ≤ 2 l/h

7 mm stroke shall take place in ≤ 60 seconds

Coolant temperature for:

- ❑ turning on the fan: 94° ± 2°C;
- ❑ turning off the fan: 80° ± 2°C.

EXHAUST GAS RECIRCULATION SYSTEM E.G.R.

General Information

The system recirculates a portion (max. 30%) of the exhaust gas from the exhaust manifold to the intake manifold of the engine according to characteristics that are permanently stored in the system's electronic control unit.

Recirculation of gas at the intake is only permissible at low loads where the air/fuel ratio is definitely high.

Exhaust gas recirculation is applied solely to permit the engine/vehicle to observe the gas emission limits of nitrogen oxide (NO_x).

Exhaust gas recirculation permits a reduction of as much as 40% of the quantity of nitrogen oxides emitted by the engine against virtually negligible increases in hydrocarbons and particulate.

This is due to an effect of the combustion reaction slowing down due to there being inert gases instead of oxygen, with an according decrease in the maximum temperature of the gas cycle on which the formation of nitrogen oxides closely depends.

Besides the difference in combustion, there is an additional effect of the reduction in the flow rate of gases leaving the vehicle exhaust from which the flow of recirculated gas is taken away.

Operation (see Figure 54)

The electronic control unit (7) processes the information from the atmospheric pressure sensor (2), water temperature sensor (3), engine speed sensor (4), potentiometer on the injection pump control lever (5) and, as programmed in its memory, it uses a PWM signal to control the modulating solenoid valve (7).
This command sets circuits (a) and (b) in communication inside the solenoid valve, modulating a variable vacuum in circuit (b) according to the strength of the command issued by the control unit.
This lower pressure acts on the diaphragm of the EGR pneumatic valve (10) calling up and lifting the shutter that normally closes the passage of exhaust gas toward the intake.
In this way, communication is opened between the exhaust and intake manifolds and the percentage of exhaust gas calculated by the control unit flows into the intake manifold.

Figure 54

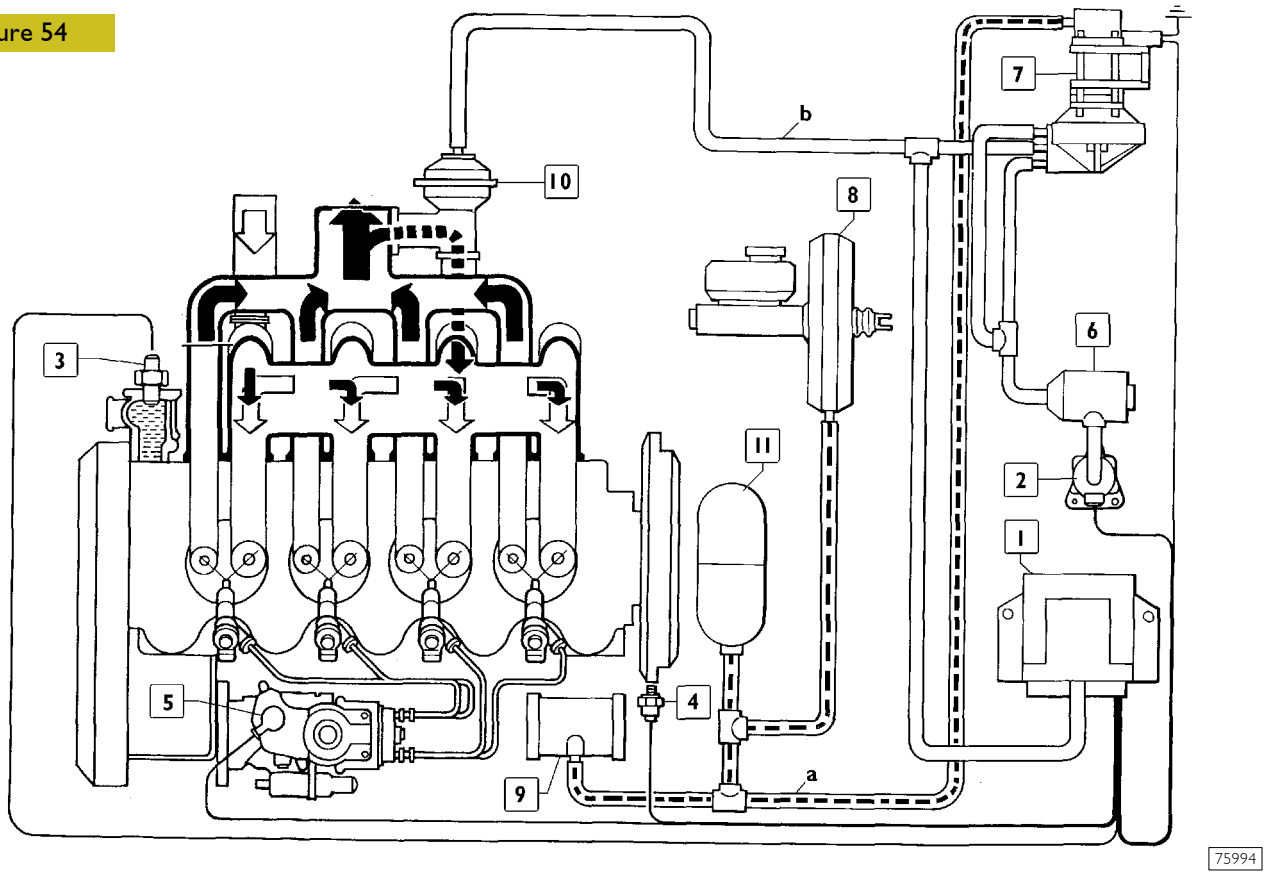

1. Bitron electronic control unit - 2. Atmospheric pressure sensor - 3. Water temperature sensor - 4. Engine speed sensor 5. Potentiometer on injection pump control lever - 6. Vacuum chamber - 6. Air filter - 7. Modulating solenoid valve - 8. Servo brake - 9. Vacuum - 10. EGR pneumatic valve - 11. Vacuum tank.

A — Vacuum circuit for servo brake

B — Modulated vacuum circuit for EGR valve control

Intake air

Exhaust gas outlet

A closed-circuit feedback check is assured by the vacuum sensor inside the control unit that measures the modulated vacuum in the circuit (b). If different from the set value (within certain parameters), the control signal to the solenoid valve is appropriately modified to achieve the calculated vacuum.

In the engine phases that do not require gas recirculation (starting, cold engine, idling, load required, high levels), the control signal of the control unit (1) to the modulating solenoid valve (7) is cancelled. The solenoid valve closes the connection between the implementing circuit (b) and the vacuum circuit (a) while restoring atmospheric pressure in the circuit (b) with the air coming out of the filter (6) of the modulating solenoid valve (7).

The quantity of recirculated gas is adjusted by a poppet valve controlled pneumatically by low pressure taken, via a fitting with a calibrated cross-section, from the pipe connecting the vacuum device to the servo brake.

The governing modulated vacuum from the solenoid valve (7) will reach the pipe (B) and, overcoming the force of the spring, will lift the diaphragm connected to the shutter that will move upwards and permit exhaust gas recirculation towards the intake manifold.

System components
EGR pneumatic valve

Figure 55

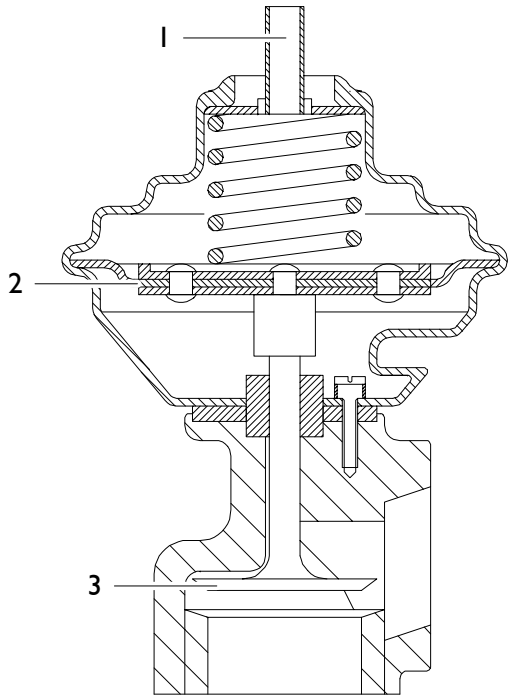

1. PIPE - 2. DIAPHRAGM - 3. SHUTTER

The quantity of recirculated gas is adjusted by a poppet valve controlled pneumatically by low pressure taken, via a fitting with a calibrated cross-section, from the pipe connecting the vacuum device to the servo brake.

The governing modulated vacuum from the solenoid valve will reach the pipe (1) and, overcoming the force of the spring, will lift the diaphragm (2) connected to the shutter (3) that will move upwards and permit exhaust gas recirculation towards the intake manifold.

Modulating solenoid valve

Figure 56

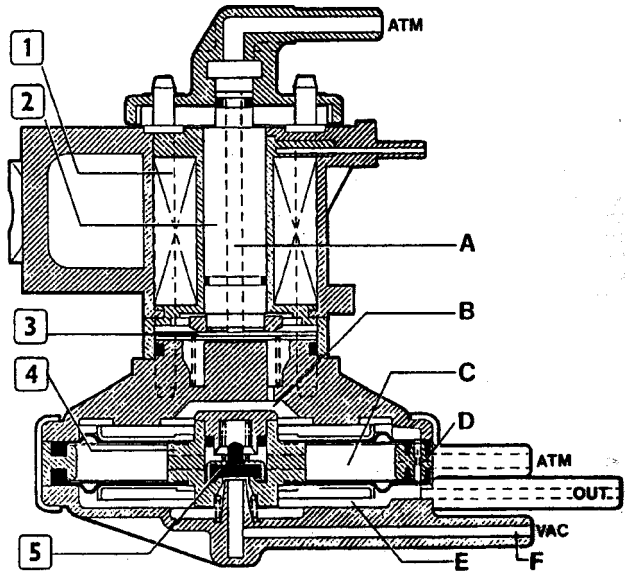

This is a proportional solenoid valve connected on one side to servobrake vacuum circuit (typical ratings 600 mm Hg) and on other it makes it possible to modulate a vacuum variable between 30 and 3,000 mm Hg depending on the command signal generated by electronic control unit.

It is connected to the control unit on pin 19.

It is supplied with a 0 ÷ 12 V signal at a fixed frequency of 140 Hz (duty-cycle). Duty cycle means the ratio between the time the signal is "ON" and the total period of the cycle (1/140 Hz). The vacuum modulated by the solenoid valve depends only on the duty cycle.

Supplying the solenoid (1), the core (2) attracts the mobile plate (3) towards it which obstructs the passage of atmospheric pressure (A) to the chamber (B).

Vacuum is created in chamber (B) the mobile, equipment (4) rises allowing connection between the vacuum source (F) and the outgoing vacuum (E).

When the solenoid valve is not supplied, there will only be atmospheric pressure at the outlet as the mobile pressure (3) falls, atmospheric pressure reaches chamber (B), mobile equipment (4) moves down, valve (5) blocks the inlet of the vacuum source (F) and atmospheric pressure (C) and control pressure (B) communicate with the outlet vacuum (E) through hole (D).

Potentiometer on injection pump lever

Figure 57

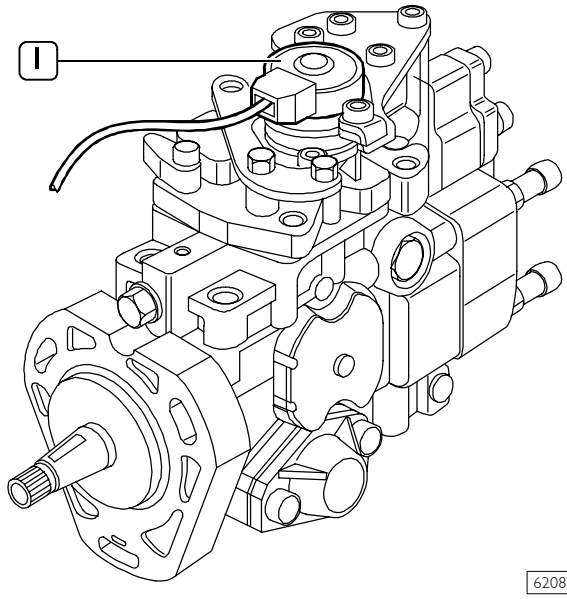

62087

Potentiometer (1) is set on injection pump control lever. Since control unit cannot read exactly the load acting on engine instantaneously, it reads injection pump lever position that is an indication of fuel introduction and therefore of load.

It is supplied with a voltage of 5 V.

It is connected to the control unit on pins 3 - 9 - 11.

It supplies the control unit a signal between 0 ÷ 5 V depending on the angle of rotation of the injection pump lever.

Engine rpm sensor

Figure 58

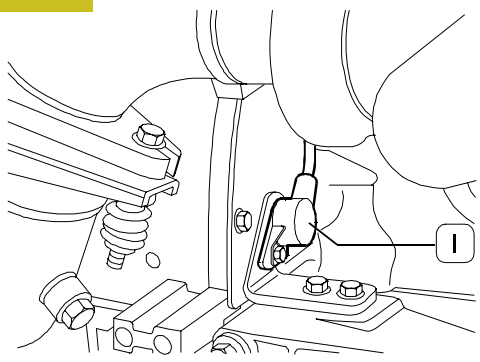

62088

This is an inductive sensor (1) located on the engine flywheel.

It generates signals obtained by the magnetic flux lines which close through the four holes machined on the flywheel.

The electronic control unit uses this signal to detect the different engine speeds.

This signal is also sent to the instrument cluster on pin B2 to drive the electronic rev counter.

It is connected to the control unit on pins 8 - 17.

Engine coolant temperature sensor

Figure 59

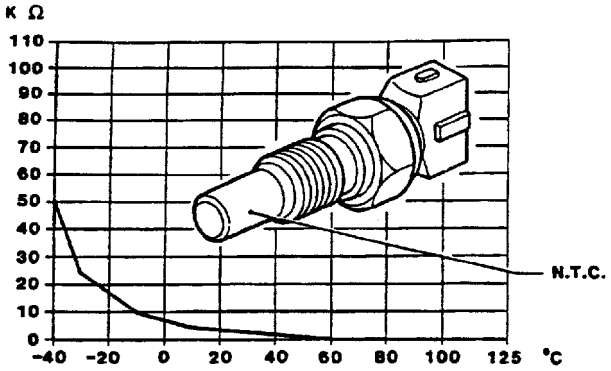

This an NTC sensor located in a boss of the thermostat body.

It detects the temperature of the water in the head and makes it possible to reduce E.G.R. below a temperature of 40 °C until shutting it off completely because when the engine is cold it would cause high smoke and difficulty in starting.

It is connected to the control unit on pins 2 - 11.

Absolute pressure sensor

Figure 60

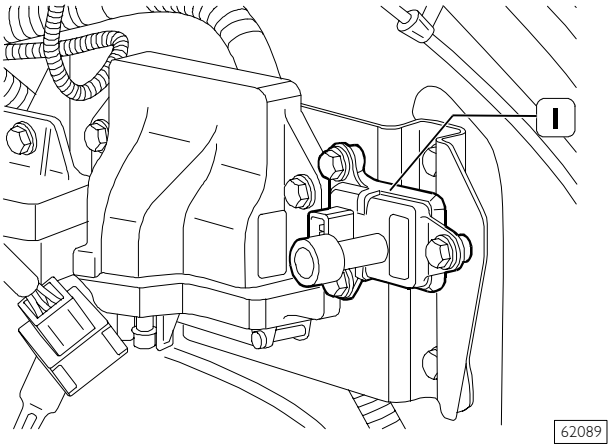

Atmospheric pressure sensor (1), is set on engine compartment right side and detects atmospheric pressure value, thus enabling to reduce E.G.R. above 1,500 m altitude, since the oxygen reduction connected to air density reduction improves smokes in presence of E.G.R.

It is supplied at 5 V.

It is connected to the control unit on pins 9 - 10 - 11.

It supplies the control unit a signal of between 0 ÷ 5V depending on the environment pressure.

Vacuum sensor

Figure 61

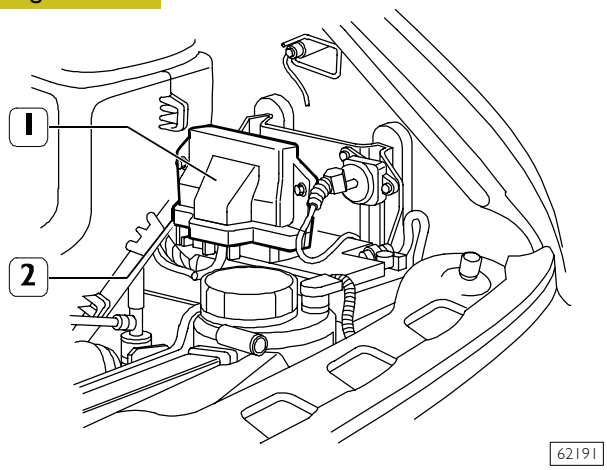

Modulated vacuum sensor (2) is set inside control unit and corrects any error and/or miscalibration of the different components to guarantee the proper vacuum value required by the system.

It also makes it possible to detect any malfunctioning of the E.G.R. system due to blowby or pneumatic failure of the modulating solenoid valve.

Electronic control unit

Control unit (1) is set on engine compartment right side and is connected to wiring by 25-pin connector.

It incorporates the vacuum sensor.

In addition to the E.G.R. it is capable of controlling the before-after heating function, the engine cooling fan electromagnetic joint, the KSB device and, where applicable, it is connected to the climate control unit.

E.G.R. operating logic.

Depending on the position of the injection pump lever, engine rpm, coolant fluid temperature and environment pressure, the control unit decided the re-circulation percentage to be activated and drives the modulating solenoid valve.

Through the vacuum sensor (2) it reads the "actual" vacuum modulated by the modulating solenoid valve, compares it with the theoretical one, and if the two values differ within determinate parameters, it makes the necessary corrections to control the modulating solenoid valve until reaching the required "actual" vacuum rating, otherwise, it does not take account of it and controls the solenoid valve without the reference signal.

OPERATION LOGICS

Figure 62

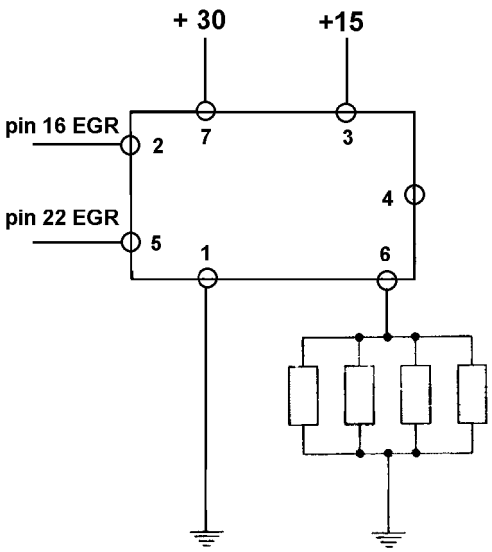

CONNECTIONS OF GLOW PLUG CONTROL RELAY

Air conditioner interface operation logic

EGR control unit controls air conditioning system compressor (load) relay connections and disconnection and obviously compressor activation or deactivation, at starting and according to engine coolant temperature, i.e. engine rpm and acceleration.

NOTE: With load ON, compressor is OFF
With load OFF, compressor is ON

Starting: at starting, EGR control unit activates compressor relay (NC). This load will be disconnected 6 ± 1 sec. after exceeding 700 ± 25 engine rpm, thus enabling if required, to activate compressor. Although engine rpm returns to lower values than threshold ones, load will no longer be connected until next engine starting.

Engine coolant temperature: load is activated at approx. 107°C and deactivated at approx. 101°C. Resistance values for EGR engine coolant temperature sensor are approx. 160Ω at 107°C and approx. 195Ω at 101°C.

Engine rpm: load is disconnected at ≥ 4000 rpm and connected at ≤ 4100 rpm.

Acceleration: load disconnects for approx. 100 m/sec. at > 2500 i.c. engine rpm.

Figure 63

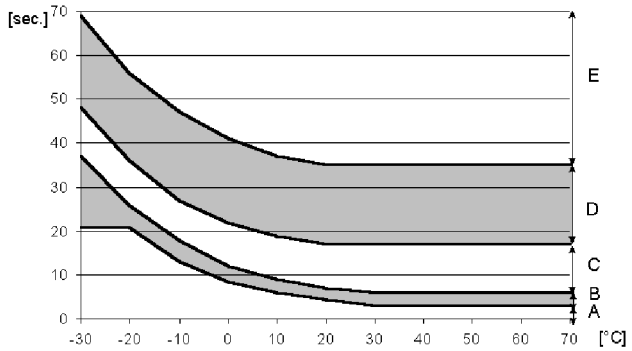

BEFORE-AFTER WARMING DEVICE OPERATING GRAPH
A.WARMING ON AND WARNING LIGHT ON - B. WARMING TIME ON WITH WARNING LIGHT ON - C. DISTRACTION TIME - D. AFTER WARMING TIME - E. AFTER WARMING OFF AND WARNING LIGHT OFF

Pre-Post Heating Operating Logic

The control unit monitors pre-post heating as a function of the engine compartment temperature measured by a sensor located inside the control unit itself.

It activates the remote control switch controlling the plugs (this switch is positioned on the right side of the engine compartment) for a variable time as a function of the above temperature.

Engine Cooling Fan Operating Logic

The control unit can connect/disconnect the electromagnetic coupling of the fan depending on the cooling fluid temperature.

It connects it when ~94°C are reached and disconnects it at ~76°C. (The temperature sensor resistance at these values is equal to ~245Ω at 94°C and ~420Ω at 76°C).

KSB Operating Logic

At approximately 1000 m, the EGR electronic control unit turns on, by activating the relevant remote control switch, the KSB advance variator when the engine cooling fluid temperature is equal to ~25°C and turns it off at ~20°C.

The relevant resistance values of the engine cooling fluid temperature sensor are: 3kΩ ± 100Ω at 25°C and 3.8kΩ ± 100Ω at 20°C.

Instead, at an altitude of approximately 1100 m, the variator is activated at ~55°C and disconnected at ~50°C. In this case the resistance values of the sensor are, respectively, 900±20Ω and 1.08kΩ ± 20Ω.

Feeding

Page

INJECTION PUMP TEST VALUES 245



The test and adjustment values indicated in the text and summary tables are given as a general indication.

INJECTION PUMP TEST VALUES

IVECO ENGINEERING	No. 500338906	Edit. 1

INJECTION ROTARY PUMP TEST VALUES

Injection pump: VE4/9F1900R808-1 Speed governor: MIN/MAX	IVECO PART N.: 500329480 BOSCH PART N.:0460 494 470

Engine : 8140.63.4000 For: IVECO

Timing:
- Injection pump static advance (Output reference "A") 1.0° ± 0.5°
  degrees before | | after |X| T.D.C. with I.P. pumping in phase of delivery at 1 mm from B.D.C.
- Or with piston at T.D.C. and injection pump pumping in phase of delivery at 0.94 ± 0.05 mm from B.D.C.
- Engine idling speed without load: 800 ± 25 rpm

TEST BENCH WITH STATIC AND DYNAMIC CHARACTERISTICS
CONFORMING TO STANDARDS ISO 4008/1 -/2

- Rotation direction: Right |X|
  Left
- Pipes: Ø 6 x Ø 2 x 450 mm
- Injectors: 1688 901 022
- Calibrated hole pad: -
- Injector setting : 130 + 3 bar
- Backflow chock: Ø 0.55 mm
- Supply pressure: 0.35 ± 0.05 bar
- Burette evacuation time: KMM
- Test fluid conforming to standard: ISO 4113
- Temperature Influx
  Defluxion |X|
- Thermometer : 45 ± 1 °C
- Electronic : ± 4 °C

"INJECTION PUMP ADJUSTMENT VALUES"
"THE NUMBERS GIVEN IN BRACKETS SHOULD
BE USED ONLY AS CONTROL VALUES"

1 - START OF DELIVERY

Pre-lift (from B.D.C.)	mm:	0 ± 0.02

2 - ADVANCE CHANGER TRAVEL

Speed	rpm:	1250
Overcharging pressure	hPa:	
Adjustment values	mm:	2.8 ± 0.1

3 - TRANSFER PUMP PRESSURE

Speed	rpm:	1250
Overcharging pressure	hPa:	
Adjustment values	bar:	6.2 ± 0.2

4 - DELIVERY AT FULL LOAD WITH OVERCHARGING

Speed	rpm:	
Overcharging pressure	hPa:	
Delivery per 1000 shots	cm^3:	
Max difference	cm^3:	

5 - DELIVERY AT FULL LOAD WITHOUT OVERCHARGING

Speed	rpm:	1250
Delivery per 1000 shots	cm^3:	53.0 ± 0.5
Max difference	cm^3:	3.0 (3.0)

6 - IDLE SPEED ADJUSTMENT

Speed	rpm:	375
Delivery per 1000 shots	cm^3:	13.0 ± 2.0
Max difference	cm^3:	3.0 (3.50)

7 - ADJUSTING THE RESIDUAL DELIVERY

Speed	rpm:	
Delivery per 1000 shots	cm^3:	

8 - MAXIMUM SPEED ADJUSTMENT

Speed	rpm:	2050
Overcharging pressure	hPa:	
Delivery per 1000 shots	cm^3:	43.0 ± 1.0

IVECO ENGINEERING	No. 500338906	Edit. 1

INJECTION ROTARY PUMP TEST VALUES

9 - START

Speed	rpm:	100
Delivery per 1000 shots	cm^3:	80.0 ± 15
Minimum delivery	cm^3:	65.0

10 - "LFB" SETTING

Speed	rpm:	1250
Overcharging pressure	hPa:	-
1. Delivery difference per 1000 shots	cm^3:	< 12 ± 1.0
2. Transfer pump pressure difference	bar:	0.2 ± 0.1

11 - INJECTION ADVANCE RUN

Overcharging pressure	hPa:	-
.1 Speed	rpm:	1250
Advance travel	mm:	2.8 ± 0.1
	mm:	(± 0.5)
.2 Speed	rpm:	1700
Advance travel	mm:	5.5 ± 0.4
	mm:	(± 0.6)
.3 Speed	rpm:	-
Advance travel	mm:	-
	mm:	-
.4 Speed	rpm:	-
Advance travel	mm:	-
	mm:	-

12 - TRANSFER PRESSURE RUN

Overcharging pressure	hPa:	-
.1 Speed	rpm:	1250
Transfer pump pressure	bar:	6.2 ± 0.2
.2 Speed	rpm:	1900
Transfer pump pressure	bar:	8.5 ± 0.5
.3 Speed	rpm:	-
Transfer pump pressure	bar:	-
.4 Speed	rpm:	-
Transfer pump pressure	bar:	-

13 - BACKFLOW VOLUME ON VALVE

.1 Speed		rpm:	600
Overcharging pressure		hPa:	-
Backflow volume	c.c./10s:		41.4 ÷ 74.52
	c.c./10s:		(41.4 ÷ 74.52)
.2 Speed		rpm:	1900
Overcharging pressure		hPa:	
Backflow volume	c.c./10s:		60.7 ÷ 104.8
	c.c./10s:		(60.7 ÷ 104.8)

14 - DELIVERY RUN AND ADJUSTMENT

.1 Speed	rpm:	(*)
Overcharging pressure	hPa:	-
Delivery per 1000 shots	cm^3:	-
	cm^3:	-
.2 Speed	rpm:	2380
Overcharging pressure	hPa:	
Delivery per 1000 shots	cm^3:	1.5 ± 1.5
	cm^3:	(± 1.5)
.3 Speed	rpm:	2150
Overcharging pressure	hPa:	
Delivery per 1000 shots	cm^3:	23.0 ± 5.0
	cm^3:	(± 6.0)
.4 Speed	rpm:	2050
Overcharging pressure	hPa:	
Delivery per 1000 shots	cm^3:	43.0 ± 1.0
	cm^3:	(± 6.0)
.5 Speed	rpm:	1900
Overcharging pressure	hPa:	
Delivery per 1000 shots	cm^3:	50.0 ± 2.0
	cm^3:	(± 2.5)
.6 Speed	rpm:	1250
Overcharging pressure	hPa:	
Delivery per 1000 shots	cm^3:	53.0 ± 0.5
	cm^3:	(± 2.0)
.7 Speed	rpm:	600
Overcharging pressure	hPa	
Delivery per 1000 shots	cm^3:	52.0 ± 2.5
	cm^3:	(± 3.0)
.8 Speed	rpm:	-
Overcharging pressure	hPa:	-
Delivery per 1000 shots	cm^3:	-
	cm^3:	-
.9 Speed	rpm:	-
Overcharging pressure	hPa:	-
Delivery per 1000 shots	cm^3:	-
	cm^3:	-
.10 Speed	rpm:	-
Overcharging pressure	hPa:	-
Delivery per 1000 shots	cm^3:	-
	cm^3:	-

IVECO ENGINEERING	No. 500338906	Edit. 1

INJECTION ROTARY PUMP TEST VALUES

15 - DELIVERY NULL (STOP)

.1	Mechanical:		
	Speed	rpm:	460
	Delivery per 1000 shots	cm^3:	1.5 ± 1.5
	Voltage	volt:	0
.2	Electrical:		
	Speed	rpm:	375
	Delivery per 1000 shots	cm^3:	1.5 ± 1.5
	Voltage	volt:	0

16 - DELIVERY AT IDLING SPEED

.1	Speed	rpm:	375
	Delivery per 1000 shots	cm^3:	13.0 ± 1.0 (± 5.0)
.2	Speed	rpm:	300
	Delivery per 1000 shots	cm^3:	28.0 ± 6.0 (± 6.0)
.3	Speed	rpm:	460
	Delivery per 1000 shots	cm^3:	1.5 ± 1.5
.4	Speed	rpm:	
	Delivery per 1000 shots	cm^3:	
	Residual delivery check		
.5	Speed	rpm	
	Delivery per 1000 shots	cm^3	

17 - "LFB" CHECK

	Speed	rpm:	1250
	Overcharging pressure	hPa:	
.1	Delivery difference per 1000 shots	cm^3:	17.0 ± 3.0
	Advance travel diff.	mm:	1.0 ± 0.1
.2	Delivery per 1000 shots	cm^3:	5.0 ± 1.0
	Advance travel diff.	mm:	

18 - AUTOMATIC START EXTRA DELIVERY

.1	Speed	rpm:	100
	Delivery per 1000 shots	cm^3:	80.0 ± 15
		cm^3:	65 min.
.2	Speed	rpm:	400
	Delivery per 1000 shots	cm^3:	65.0 ± 8
		cm^3:	73 max.
.3	Speed	rpm:	
	Delivery per 1000 shots	cm^3:	
		cm^3:	

19 - POTENTIOMETER CALIBRATION AND CHECKING

Supply	volt:	5.0
Setting		
Speed	rpm:	1000
Delivery per 1000 shots	cm^3	33.8 ± 0.5
Potentiometer output voltage	volt:	3.25 ± 0..1
Checking:		
Speed	rpm:	
Delivery per 1000 shots	cm^3:	
Potentiometer output voltage	volt:	

20 - EGR MICROSWITCH CALIBRATION

Speed	rpm:	
Overcharging pressure	hPa:	
Delivery per 1000 shots	cm^3:	

21 - GLOW PLUG MICROSWITCH ADJUSTMENT

Contact closed at:
of injection pump
control lever travel

22 - CUT-OUT ELECTROMAGNET

Operating minimum voltage	volt:	10
Rated voltage	volt:	12

23 - ASSEMBLING AND ADJUSTING DIMENSIONS

Denomination:		
K	mm:	3.7
KF	mm:	
MS	mm:	1.6
SVS max.	mm:	
MSI	mm:	
Ya	mm:	38.9 ± 1.0
Yb	mm:	44.5 ± 3.0
TLA-E	mm:	
Devices		
HBA STROKE	mm:	
LDA STROKE	mm:	
KSB LEVER	:	
KSB SPEED R.P.M	:	
KSB TRANSFER	bar:	
KSB SPEED R.P.M	:	
KSB ADVANCE	mm:	2.8
KSB ADVANCE A.P. DEGREES	:	3.5
KSB VOLT EL. VALVE	:	

IVECO ENGINEERING	No. 500338906	Edit. 1

INJECTION ROTARY PUMP TEST VALUES

REMARKS:

1) references for which no letters or numbers are given are reserved for other injection pump designs;

2) for a correct adjustment of injection pumps on the electric bench, conform to the manual IVECO Technical Publications and Training No. XXXXXXXXX;

3) measurements taken on injection pumps equipped with "KSB" must be performed with the same at rest;

4) (*) LDA adjusting point: act on spring pre-loading ring;

5) after every variation of LDA pressure, act on the control lever;

6) for adjusting the starting point (ARF valve) add a 12.0 mm spacer to the third delivery stop.

6b) "MODIFICATION POINT 6" FOR POTENTIOMETER SETTING POINT, PLACE A 12mm SHIM BETWEEN THE THROTTLE LEVER AND THE THIRD STOP.

NOTES: BOSCH SHEET ED. 5 DTD. 24.06.98	C.I.D.	DATE 26-06-98

F1AE0 ENGINE

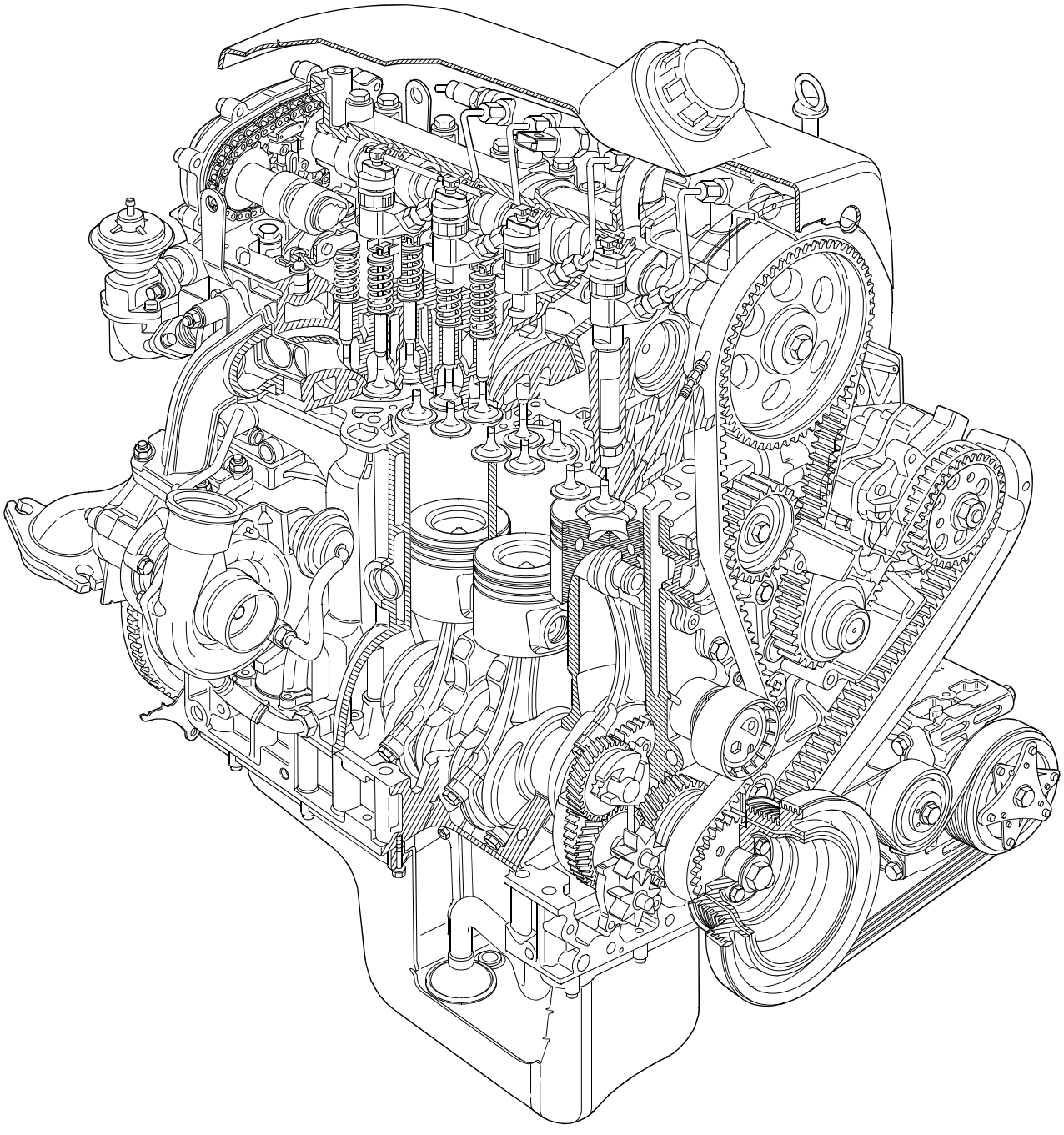

F1AE 0 engine

	Page
MAIN OPERATIONS ON ENGINE MOUNTED ON VEHICLE	255
ENGINE REMOVAL–REFITTING	257
❑ Removal	257
❑ Refitting	261
❑ Checks and tests	261
❑ Power steering system air bleed	261
REPLACING BELTS	262
❑ Replacing air–conditioning compressor drive belt	262
❑ Disassembly	262
❑ Assembly and adjusting belt tension	262
❑ Power steering pump–alternator belt replacement	262
❑ Disassembly	262
❑ Assembly	262
❑ Replacing timing drive belt	262
❑ Disassembly	262
❑ Assembly	264
REPLACING ELECTRO–INJECTORS	265
❑ Disassembly	265
❑ Assembly	265
CYLINDER HEAD REMOVAL AND REFITTING	266
❑ Removal	266
❑ Refitting	268
REPLACING HIGH–PRESSURE PUMP CP3	269
❑ Removal	269
❑ Refitting	269
REPLACING WATER PUMP	269
❑ Removal	269
❑ Refitting	269
EMISSIONS	270
ENGINE IDENTIFICATION CODE	272

Page

GENERAL SPECIFICATIONS 274
ASSEMBLY DATA – CLEARANCES 277
TOOLS 282
EXPERIMENTAL TOOLS 288
TIGHTENING TORQUE 299
OVERHAULING ENGINE F1A 304
DISASSEMBLING THE ENGINE AT THE BENCH 304
REPAIRS 313
CYLINDER BLOCK 313
❑ Checks and measurements 313
❑ Checking head mating surface on cylinder block 314
CRANKSHAFT 314
❑ Measuring main journals and crank pins 314
❑ Checking crankshaft 315
❑ Replacing timing control gear 317
ENGINE ASSEMBLY 317
❑ Fitting main bearings 317
❑ Measuring main journal assembly clearance . . . 317
❑ Checking crankshaft end float 318
❑ Fitting rear seal 319
ENGINE FLYWHEEL 319
❑ Replacing bearing supporting gearbox input shaft 320
❑ Replacing engine flywheel ring gear 320
CONNECTING ROD – PISTON ASSEMBLY 320
❑ Pistons 321
❑ Measuring piston diameter 321
❑ Piston pins 322
❑ Conditions for correct pin–piston coupling . . . 322
❑ Piston rings 322
❑ Connecting rods 323
❑ Bushes 323
❑ Checking connecting rods 323

Page

❑ Checking torsion 324
❑ Checking bending 324
❑ Assembling connecting rod–piston assembly . . 324
❑ Checking for connecting rod – piston distortion 325
❑ Fitting piston rings 325
❑ Fitting connecting rod – piston assemblies in cylinder barrels 325
❑ Measuring crankpin assembly clearance 325
❑ Checking piston protrusion 326
CYLINDER HEAD 327
❑ Disassembly 327
❑ Removing valves 327
❑ Checking cylinder head seal 328
❑ Checking cylinder head mating surface 328
VALVES 328
❑ Removing deposits, refacing and checking valves 328
❑ Checking clearance between valve stem and valve guide and centring valves 329
VALVE GUIDES 329
❑ Replacing valve guides 329
❑ Boring valve guides 329
VALVE SEATS 330
❑ Regrinding – replacing valve seats 330
VALVE SPRINGS 331
ROCKER ARMS – TAPPETS 331
❑ Checks 332
FITTING CYLINDER HEADS 332
❑ Overhead 333
❑ Overhead removal 333
TIMING SYSTEM 334
❑ Description 334
❑ Camshaft 335
❑ Checks 335
❑ Checking cam lift and pin alignment 335

Page

- ❑ Fitting overhead 336
- ❑ Refitting cylinder head 340
- ❑ Adjusting air-conditioner – compressor drive belt tension 343
- ❑ Timing speed sensor 347
- ❑ Engine speed sensor 347

LUBRICATION 349

- ❑ General 349

OIL VACUUM PUMP ASSEMBLY (GPOD) 351

- ❑ Oil pump 351
- ❑ Characteristic data 351
- ❑ Vacuum pump 351
- ❑ Oil pressure control valve 352
- ❑ Oil filter 352
- ❑ Modine heat exchanger 352
- ❑ Oil vapour recirculation system 353
- ❑ Description 353

COOLING 354

- ❑ Description 354
- ❑ Operation 354
- ❑ Electromagnetic pulley 355
- ❑ Water pump 355
- ❑ Thermostat 355

TURBOCHARGING 356

- ❑ Description 356
- ❑ Turbocharger 357

REPAIRS 358

- ❑ Pressure relief valve 358
- ❑ Checking and adjusting pressure relief valve . . . 358
- ❑ Replacing pressure relief valve 358

EXHAUST GAS RECIRCULATION (EGR) SYSTEM 359

FUEL SUPPLY 361

HIGH-PRESSURE ELECTRONIC INJECTION SYSTEM (MS 6.3) 361

- ❑ General 361

Page

SYSTEM OPERATION 363

- ❑ Self-diagnosis – BLINK CODE 363
- ❑ Immobilizer recognition 363
- ❑ Checking fuel temperature 363
- ❑ Checking engine coolant temperature 363
- ❑ Checking quantity of fuel injected 363
- ❑ Checking idling adjustment 363
- ❑ Fuel cut-off in release phase 363
- ❑ Checking cylinder balancing on idling 363
- ❑ Checking regular engine rotation (anti-sawing) . 363
- ❑ Checking smokiness at exhaust on acceleration 363
- ❑ Checking exhaust gas recirculation (E.G.R. if present) 363
- ❑ Checking top speed limit 363
- ❑ Checking regular rotation on acceleration 363
- ❑ Checking glow plug control unit 363
- ❑ Checking activation of air-conditioning system . 363
- ❑ Checking fuel pump 363
- ❑ Checking diesel warming 364
- ❑ Checking cylinder position 364
- ❑ Checking pilot and main injection timing 364
- ❑ Checking injection pressure closed cycle 364
- ❑ Fuel supply 364
- ❑ Correcting flow rate according to water temperature 364
- ❑ Correcting flow rate to avoid noise, smoke or overloading 364
- ❑ De-rating 364
- ❑ Injection timing electronic test 364
- ❑ Speed governor 364
- ❑ Engine starting 364
- ❑ Cold starting 365
- ❑ Warm starting 365
- ❑ Run up 365
- ❑ After run 365

Page

- ❑ Cut-off 365
- ❑ Cylinder balancing 365
- ❑ Synchronization search 365

OPERATION 367

HYDRAULIC SYSTEM 369

- ❑ Fuel pump 369
- ❑ Specifications 369
- ❑ Fuel filter 370
- ❑ Tightening torques 370
- ❑ High-pressure pump 371
- ❑ High-pressure pump internal structure 373
- ❑ Working principle 374
- ❑ Pressure control valve 377

MECHANICAL SUPPLY PUMP 377

- ❑ Hydraulic accumulator (rail) 378
- ❑ Pressure relief valve 378

ELECTRO-INJECTORS 378

- ❑ Operation 379

ELECTRIC/ELECTRONIC COMPONENTS 379

- ❑ Electronic control unit MS6.3 379
- ❑ Glow plug electronic control unit 380
- ❑ Glow plugs 380

SENSORS 380

- ❑ Engine speed sensor 380
- ❑ Camshaft timing sensor 380
- ❑ Air temperature and pressure sensor 380
- ❑ Fuel temperature sensor 380
- ❑ Fuel pressure sensor 380
- ❑ Atmospheric pressure sensor 380
- ❑ Engine coolant temperature sensor 381
- ❑ Throttle pedal position sensor 381
- ❑ Clutch pedal position sensor 381

Page

- ❑ Brake pedal position sensor 381
- ❑ Vehicle speed sensor 381

ACTUATORS 381

- ❑ PWM (Pulse Width Modulation) controls 381

TROUBLESHOOTING 383

MAIN OPERATIONS ON ENGINE MOUNTED ON VEHICLE

Keep to the following instructions before doing any work on the engine involving components of the fuel supply system.

- ❑ Before doing any work on the engine, perform the engine/vehicle fault diagnosis with specific IVECO diagnosis equipment and print out the results.
- ❑ Replacement of the MS6.3 control unit must be authorized by the **Help Desk.**
- ❑ The following components of the fuel system cannot be overhauled, instead they are replaced: flow limiters, pressure relief valve, fuel pressure sensor, hydraulic accumulator, complete CP1 high-pressure supply pump, pressure control valve, electro-injectors.
- ❑ All the parts of the Common Rail system are packaged by the supplier in sheets of oiled paper and are stored in cardboard boxes. They must therefore be protected against moisture and unpacked just prior to assembly.
- ❑ The greatest care must be taken over the cleanliness of parts, making sure that when handling or assembling (starting with straightforward filter and pre-filter replacement) no dirt of foreign bodies can get inside. For this reason, the plugs protecting the hydraulic parts and sensors must be removed just prior to positioning in their seats.
- ❑ Take care over the direction of assembly for all electrical connections.
- ❑ All threaded connections must be tightened to the prescribed torque.
- ❑ All the quick-coupling connectors (on the engine they are found on the high-pressure pump and on the diesel drain manifold) must be fully inserted. To drive them out, press on the tabs at the base of the connectors.

Electro-injector

None of the couplings/unions/nuts on the injector body may be handled. It is neither necessary nor permitted to dismantle the nozzle body or the electromagnet.
If working on the high-pressure pipe, the hexagon on the injector side must be kept stationary with a wrench.
Before working on pipes, make sure the injector is stationary in its seat on the cylinder head.
When assembling/disassembling the injector drain, the retaining spring must not be removed from its seat in the injector: pushing the spring towards the engine and applying a vertical force on the connector frees the recirculation. When assembling, rest the recirculation connector in its seat and apply a vertical force while keeping the retaining spring pressed in the direction of the engine. Fitting in has to be easy.

CP3 High-pressure pump

No work is permissible on the pressure control.
If working on the high-pressure pipe, the hexagon on the pump side must be kept stationary with a wrench.
Before working on the high-pressure pipe, make sure the pump is secured in its seat.

High-pressure pipes

Each high-pressure pipe must be replaced after disassembly operations.
The couplings must be tightened or loosened with the injectors, hydraulic accumulator (rail) and high-pressure pump well secured and taking care to keep the hexagon on the component side stationary, space permitting.

Hydraulic accumulator (rail) and accessories

The pressure sensor and pressure relief valve can undergo 5 successive assemblies, after which it is necessary to change them. They must be lubricated with a film of oil before assembly.
The pressure relief valve must also be lubricated prior to assembly and the seal must be changed.

Toothed timing drive belt

If the engine has run for a period equivalent to over 25,000 km, the toothed timing drive belt must be replaced with a fresh one, no matter what its state of wear, whenever it gets removed or any work is done on its automatic tightener.

540110 ENGINE REMOVAL-REFITTING

Removal

Figure 1

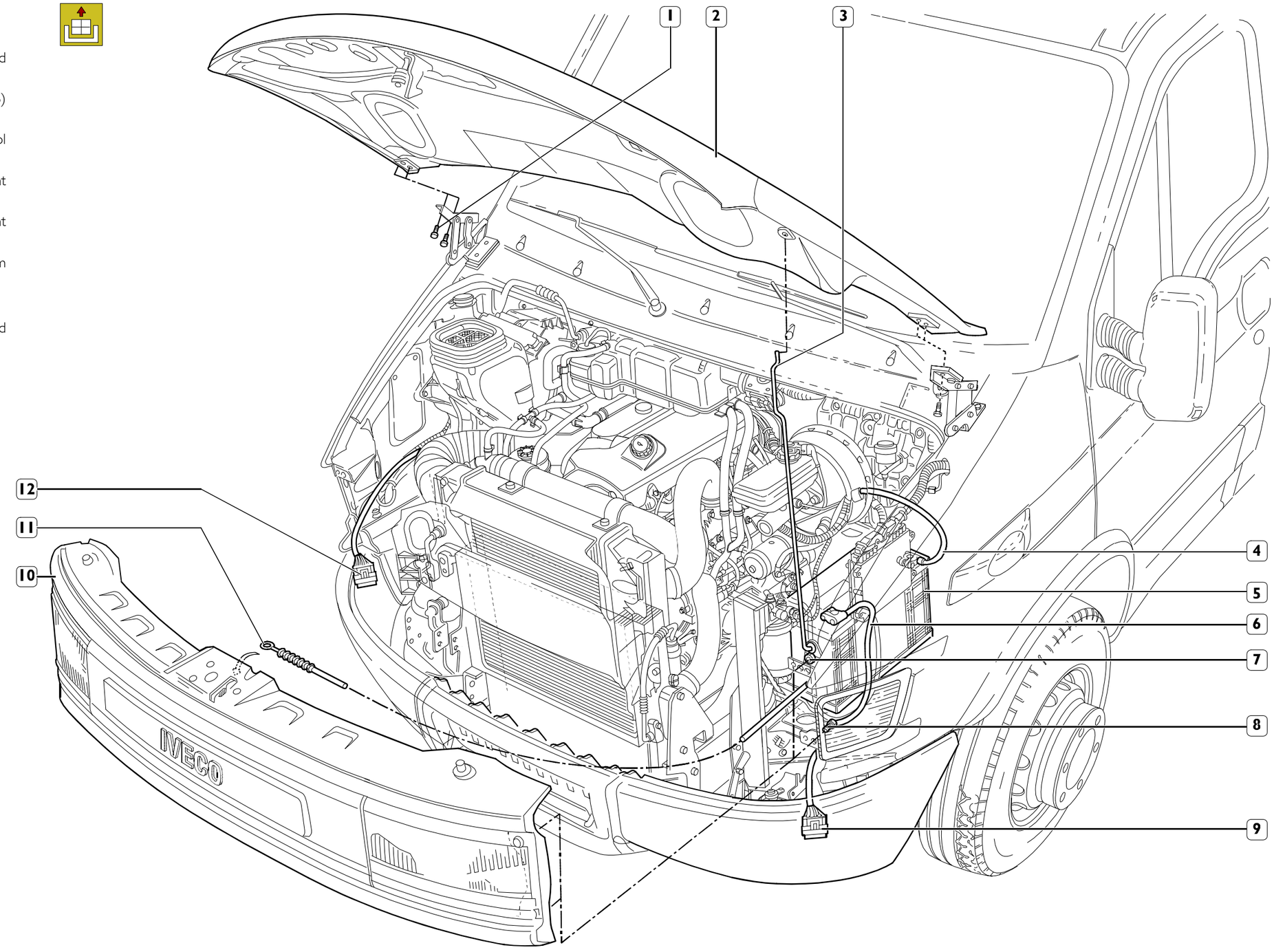

Set the vehicle over the pit or on the lift.

Lift up the bonnet (2), unscrew the screws (1) securing it and take it off. Remove the prop (3).

Disconnect the negative cable (4) and the positive cable (6) from the battery (5) and detach this from the engine bay.

Unhook the cable (11) from the bonnet opening control devices.

Disconnect the electrical connections (12) of the front headlamps.

Unscrew the nuts (7) and screws (8), then remove the front cross member (10) with the light clusters.

Unscrew the screws (10, 12 and 14) and remove the bottom side guards (11 and 13).

Underneath the vehicle (see Figure 4):

- ❑ Unscrew the screws (⇒) and remove the central guard (12).

- ❑ Take the cap (2) off the expansion tank (4).
- ❑ Unscrew the coolant plug (16), under the radiator (17), and drain the cooling system.
- ❑ Disconnect the pipe (25) from the coalescence filter (26) and from the air intake pipe (14).
- ❑ Disconnect the pipes (12) and (13) from the heat exchanger, intake manifold and turbocharger.

Close the turbocharger air outlet appropriately to prevent foreign bodies accidentally getting inside and damaging it.

- ❑ Disconnect the coolant pipes (9 and 10).

Vehicles with an air-conditioner in the cab should have the electrical connection (15) disconnected from the drier filter.

- ❑ Unscrew the air filter bracket fasteners (20) to help extract the air intake pipe (21) from the duct (18) on the radiator assembly.
- ❑ Disconnect the pipe (22) from the duct (19) and (23) from the engine.
- ❑ Disconnect the tube (3) from the expansion tank (4).
- ❑ Unscrew the screws (11) to remove the radiator assembly (17) together with the heat exchanger.

For vehicles with an air-conditioner in the cab:

- ❑ Put the radiator, with condenser and drier filter, back into the engine bay, taking care not to put the air-conditioning system pipes under tension.

- ❑ Disconnect the coolant pipes (8) and (24) from the rigid three-way pipe (27), freeing them from any clamps (7).
- ❑ Disconnect the heater delivery pipe (1).
- ❑ Unscrew the fasteners (6) to remove the expansion tank (4), disconnecting the level sensor's electrical connection.
- ❑ Take the soundproofing cover (5) off the cylinder head after removing the oil filler cap.

Figure 2

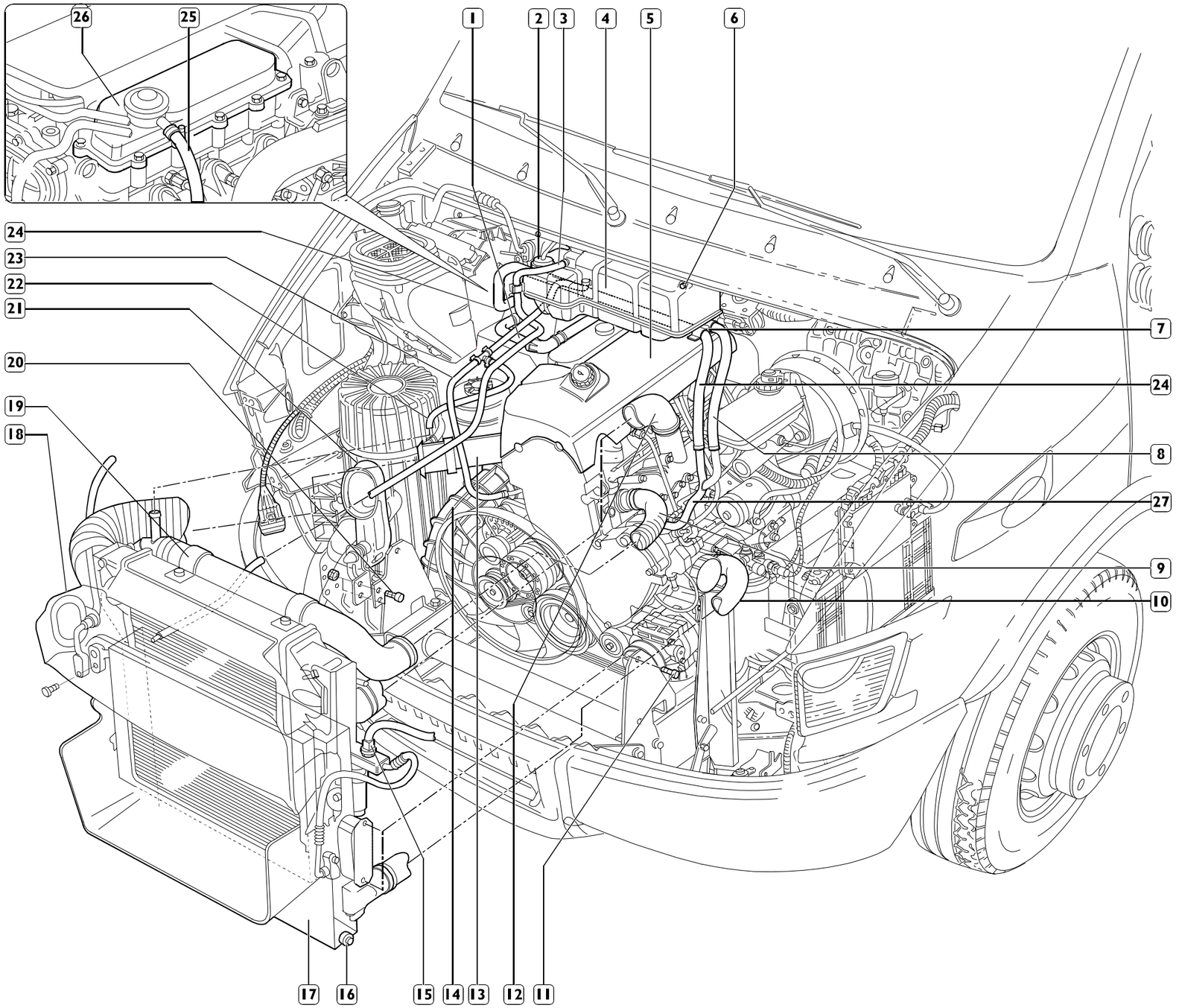

Place a container under the power steering pump to recover the oil from the system. Then disconnect the oil inlet and outlet pipes (16 and 17).

- ❑ Disconnect the pipes (7) recovering diesel from the high-pressure-pump.
- ❑ Disconnect the pipe (8) delivering diesel to the high-pressure-pump.
- ❑ Disconnect the vacuum pipe (23) from the vacuum pump.
- ❑ Disconnect the air intake duct (19).

Close the turbocharger air outlet appropriately to prevent foreign bodies accidentally getting inside.

- ❑ Free the wiring harness of the engine (15) from the clamps (←) on the timing cover, disconnect the connections of the alternator (21) and from the sensors on the thermostat (22), from the electromagnetic coupling of the fan hub (20) and move the wiring to one side so it will not interfere with the disassembly of the engine.
- ❑ Disconnect the wiring (2) from the water temperature and timing sensors, from the injectors, intake air temperature sensor and rail pressure sensor. Move the wiring to one side.
- ❑ Disconnect the high-pressure pump electrical connection (10).
- ❑ Disconnect the engine speed sensor (9).
- ❑ Disconnect the engine earth cable (6).
- ❑ Disconnect the positive cable from the starter motor (5).

The remaining electrical connections of the engine cable are disconnected from the associated electrical components after removing the engine.

- ❑ Disconnect the oil fillpipe by undoing the fastenings (1).
- ❑ Undoing the fastenings (18), remove the fan from the electromagnetic coupling (20).
- ❑ Attach tool 99360544 (4) to the brackets on the engine to extract it from the engine bay and put it slightly under traction.

Vehicles with air-conditioning in the cab should have the compressor (11) disconnected as follows:

- ❑ slacken the tightener using the screw (13) and remove the belt (14);
- ❑ undo the fasteners (12), remove the compressor (11) and put it back into the engine bay without disconnecting it from the system pipes.

Figure 3

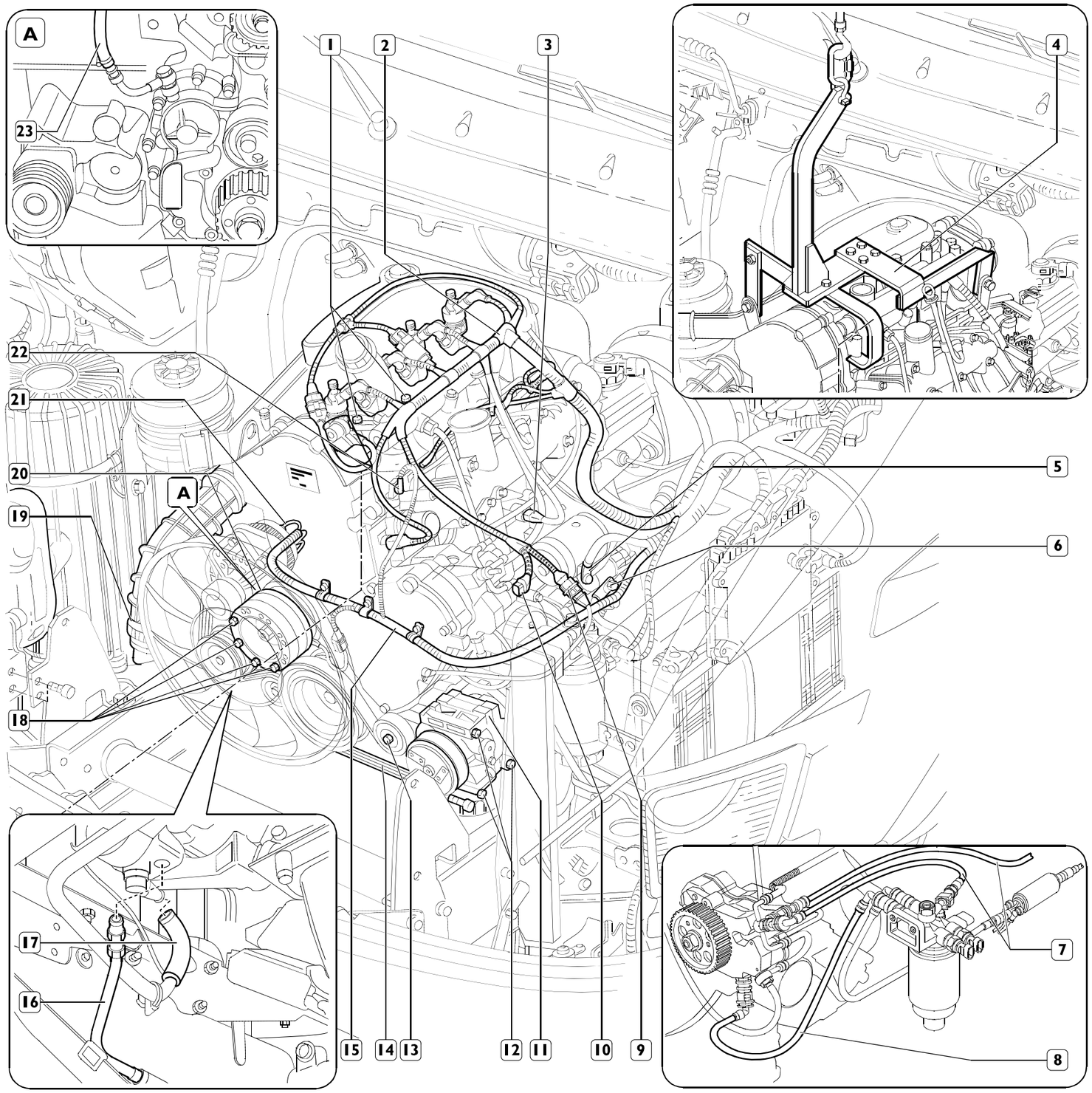

- ❑ Disconnect the screws (16 and 20) securing the brackets (17 and 19) and disconnect the "bowdens" (18 and 21) from the gearbox.
- ❑ Unscrew the fixing screws (22), move the clutch control cylinder (23), with its bracket, and fasten it to the chassis frame appropriately.
- ❑ Remove the sealing from the ring nut (1), unscrew it and disconnect the speedometer control cable.
- ❑ Disconnect the electrical connection (4) from the reversing light switch.
- ❑ Disconnect the exhaust pipe (9) from the turbocharger outlet pipe.
- ❑ Put a jack under the gearbox to support it.
- ❑ Disconnect the bracket supporting the gearbox on the rear crosspiece by undoing the four screws (5).
- ❑ Unscrew the fixing screws (6) and remove the crosspiece (7) supporting the gearbox complete with the gearbox/support bracket.
- ❑ Disconnect the engine mounts (14) by undoing the four screws (13).
- ❑ Disconnect the rubber buffers (14) by undoing the four screws (13).
- ❑ Unscrew the screws (3) securing the propeller shaft (2) to the gearbox. Fasten the propeller shaft to the chassis frame appropriately.
- ❑ Take the jack out from under the gearbox.
- ❑ Lift the engine assembly and take it out of the engine bay.

The engine should be taken out of the engine bay extremely carefully so as not to damage the parts remaining on the vehicle.

If it is necessary to detach the gearbox from the engine, take out the fixing screws and remove the starter motor.

Take out the fixing screws and detach the gearbox from the engine.

Should this prove difficult, take the inspection cover off the front cover of the gearbox.

Using special pliers, open out the circlip retaining the thrust-bearing sleeve to the clutch plate while detaching the gearbox from the engine.

Figure 4

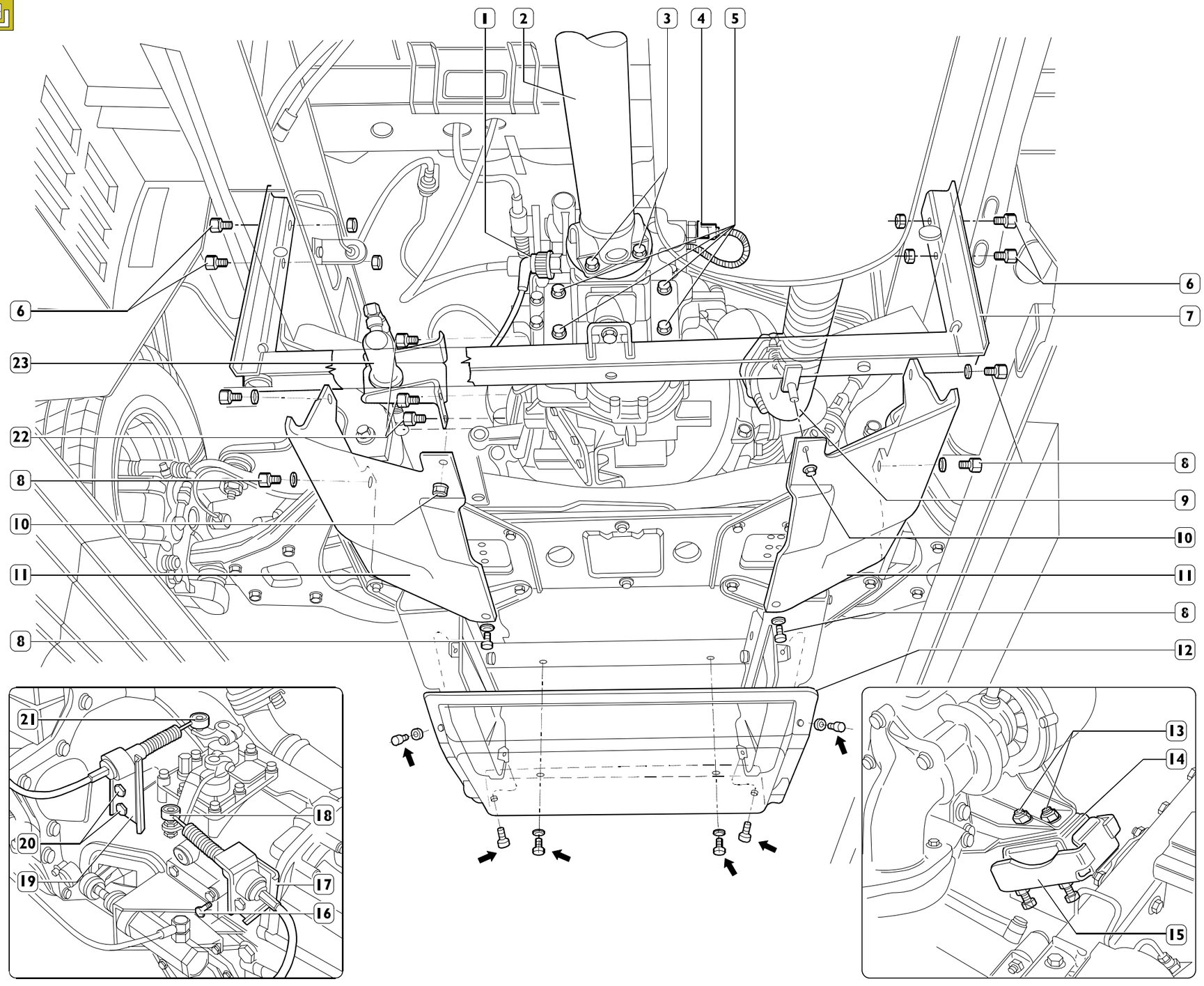

Refitting

To refit the engine assembly, carry out the operations described for removal in reverse order, following these instructions:

- ❑ Before refitting the gearbox to the engine, it is necessary to remove the pressure plate bearing from the diaphragm spring by opening out the retaining circlip.
  Fit the pressure plate bearing on the sleeve of the drive input shaft cover, connecting it to the clutch release lever. Spread the gearbox input shaft with Molikote molybdenum disulphide grease.
  Engage a gear to let the main shaft turn, rotating the propeller shaft connecting flange. Push the gearbox fully in so that the pressure plate bearing couples with the diaphragm spring correctly.
- ❑ Pay special attention to the operations needed to install the engine assembly in the engine bay.
- ❑ Check the conditions of the coolant pipes or sleeves and of the air ducts. Replace them if they show any sign of deterioration.
- ❑ Check the flexible mountings of the assemblies: engine and gearbox. Replace them if they show any sign of deterioration.
- ❑ Check that the exhaust pipe members have not deteriorated and are not about to deteriorate. If this is so, replace them along with the flexible parts for securing them.
- ❑ Tighten the screws or nuts to the required torque.
- ❑ Meticulously check the state of the vacuum pipe. It must show no sign of cracking, cutting, scoring or of being crushed. Replace it if there is any doubt at all about its soundness. When mounting it, make sure the pipe does not come into contact with sharp metal parts or corners or with any particularly hot parts. In addition, after assembly, the pipe must have no bends or constrictions, its radius of curvature should be broad and it must be secured to the vacuum pump fitting with a suitable clamp.
- ❑ Make sure the quick-coupling fittings of the fuel pipes are thoroughly clean and, after connection to the relevant high-pressure pump unions or fuel filter mount, are fully inserted and do not come loose.
- ❑ Fill the cooling system with coolant.
- ❑ Fill the hydraulic power steering circuit and bleed the air as described under the relevant heading.
- ❑ Check the level of oil in the engine and gearbox.
- ❑ Adjust the tension of the drive belt of the compressor for the air-conditioner as described in "Replacing Belts" (if present).

When positioning the engine in the engine bay, take special care not to damage the top pipe of the power steering and the soundproof-heatproof cladding of the engine bay.
Once positioned, meticulously check that the top pipe of the power steering is sound.
Before using it again, check that the power steering oil and coolant contain no impurities. If they do, filter with suitable mesh filters. For any topping up, refer to the REPLENISHING FLUIDS table in the "GENERAL" section.

Checks and tests

Start up the engine, leave it running just a little faster than idling speed and wait for the coolant temperature to reach the value for opening the thermostat, then check that:

- ❑ No water leaks from the connecting sleeves of the engine cooling and cab heating circuit pipes; tighten the collars if necessary.
- ❑ No oil leaks from between the cover and cylinder head, oil sump and crankcase, oil filter and its seat, heat exchanger and crankcase or from between the various pipes of the lubricating circuit.
- ❑ No fuel leaks from injection pump and injector lines. Tighten fittings if necessary.
- ❑ Check the indicator and warning lights on the instrument panel and the devices disconnected on removing the engine all work properly.

501430 Power steering system air bleed

Check the level of oil in the tank and top it up if necessary.
Lift the vehicle at the front, start up the engine and let it idle for some time.
Check there is no oil leakage from the hydraulic circuit and check the level in the tank.
Slowly turn the steering wheel in both directions of steering so that the air in the hydraulic system comes out.
Check the level of oil in the tank again and top up if necessary.

REPLACING BELTS

543910 Replacing air-conditioning compressor drive belt

Disassembly

Figure 5

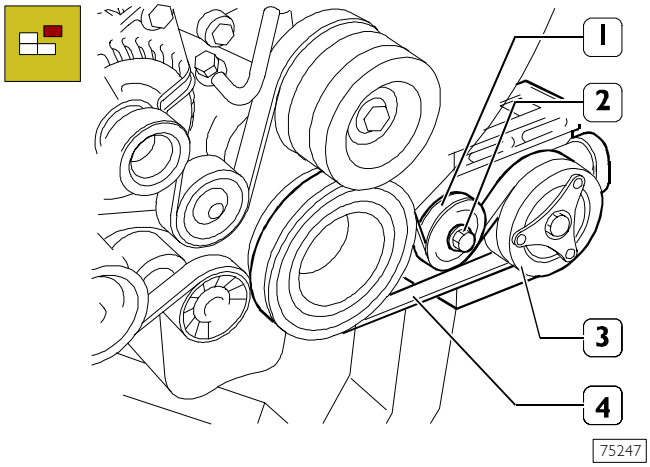

75247

Set the vehicle on a lift or over a pit. From underneath the vehicle, detach the middle soundproofing guard.
Loosen the screw (2) fixing the tightener (1) and remove the belt (4) driving the air-conditioner compressor (3).

Assembly and adjusting belt tension

Figure 6

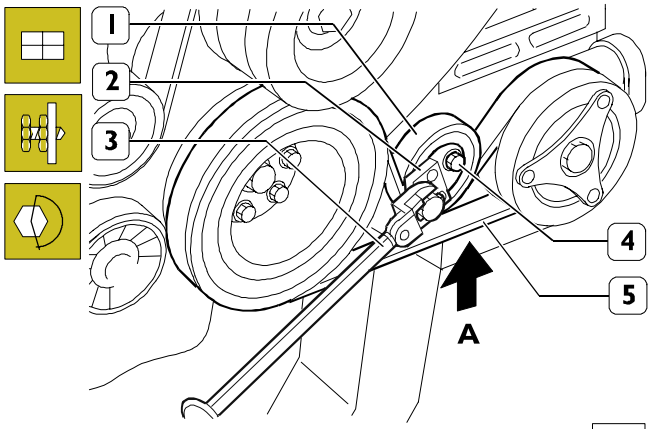

75502

Mount the drive belt, taking care to position its ribs properly in the respective races of the pulleys.
With the tool SP.2341 (2) inserted in the holes of the tightener (1) and a torque wrench (3), turn the tightener (1) with a torque of 8.2-10 Nm; in this condition, tighten the screw (4) to a torque of 25 Nm.
Turn the engine in its direction of rotation to have the belt (5) make two full turns.
Using tool 99395849, measure the tension of the belt (5) in the section **A**, which must be 204 ± 10 Hz, corresponding to a load of 1010 ± 10 N on the tightener.
Fit the middle soundproofing guard back on.

543910 Power steering pump-alternator belt replacement

Disassembly

Figure 7

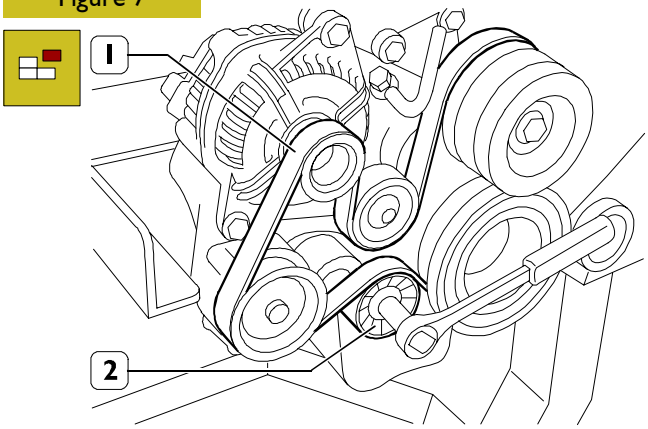

75248

Disassemble the compressor drive belt, if there is one, as described under the relevant heading.
Slacken off the tension of the belt (1) using a specific wrench on the automatic tightener (2) and remove the belt.

Assembly

Mount the drive belt (1) taking care to position its ribs correctly in the respective races of the pulleys.
Release the automatic tightener (2). Turn the crankshaft by one turn to settle the belt.
Mount the compressor drive belt, if there is one, and adjust the tension as described under the relevant heading.
Fit the middle soundproofing guard back on.

541257 Replacing timing drive belt

Disassembly

Following the procedures described for removing the engine, take out the radiator assembly without disconnecting the air-conditioning system pipes from the condenser or from the drier filter and put it appropriately aside in the engine bay.

Remove the air-conditioner compressor drive belt (22) (if there is one) and the water pump / alternator drive belt as described under the relevant headings.
Remove the fan (25) from the electromagnetic coupling (6).
Disconnect the electrical connection (24) from the electromagnetic coupling (6).
Take out the fixing screws (2) and (3) and remove the mounting together with the electromagnetic coupling (6).
Take out the screws and remove the fixed tightener (5) and the automatic tightener (4).
Remove the wiring from the timing cover (23) and dismantle this.
Take off the cap (13) and remove the soundproofing cover (14).
Disconnect the pipes (15) from the pipe (16).
Take out the fixing screws (8) and remove the expansion tank (7); disconnect the electrical connection for the level indicator from the expansion tank and put the tank (8) aside appropriately.
Take out the screws (10) and remove the bracket (11) fixing the soundproofing cover (14).
Remove the plugs (9) from the overhead and the plug (20) from the oil pump – vacuum pump assembly mounting.
Turn the crankshaft clockwise so as to be able to insert the pins 99360614 (12) through the holes in the plugs (9) into the relevant holes of the camshafts and pin 99360615 (19) through the hole in the plug (20) into the crankshaft.
Loosen the screw (17) securing the automatic tightener (18) and remove the timing belt (21).

Figure 8

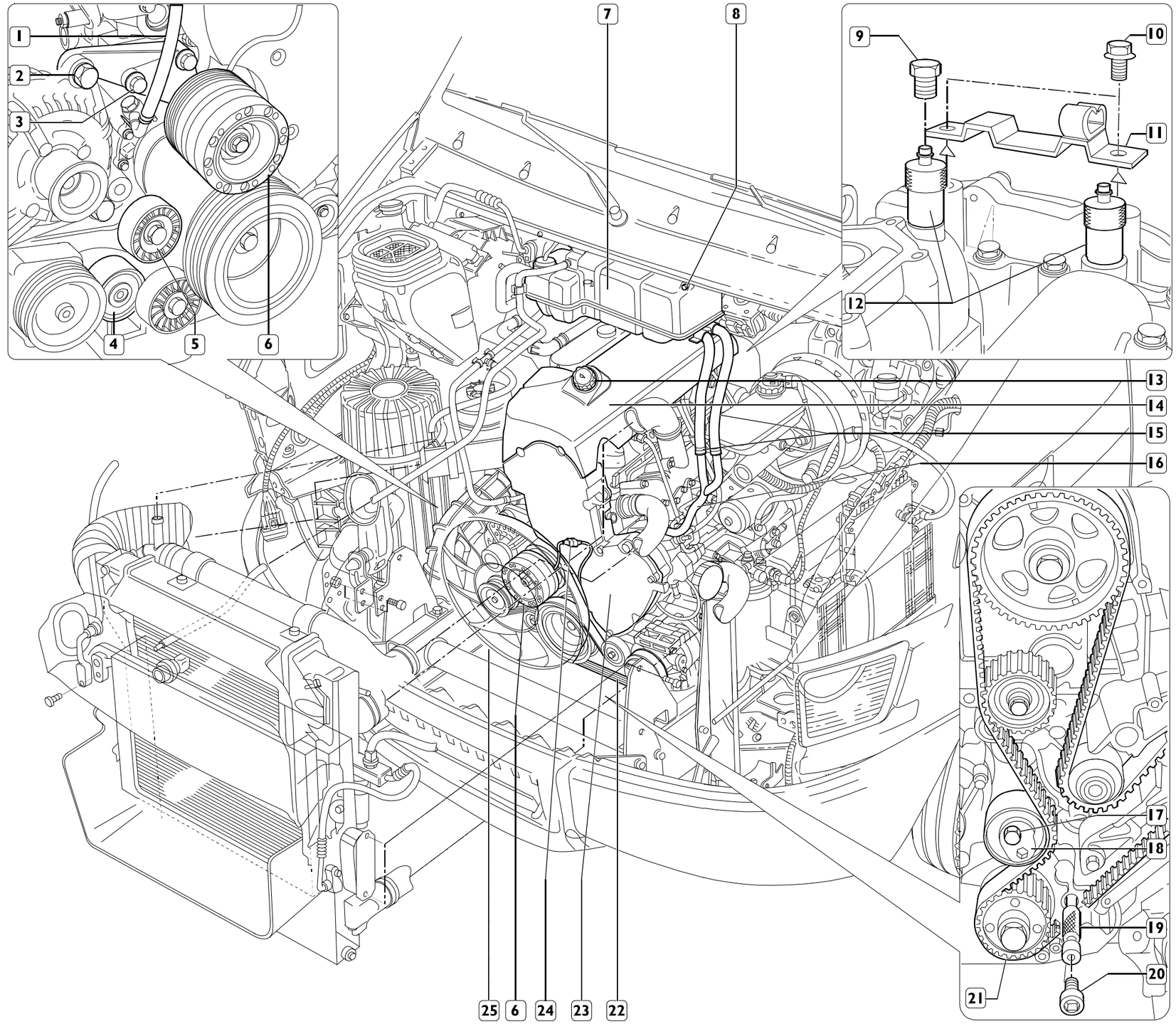

Assembly

Insert tool 99360608 (8) into the hole of the toothed pulley (7) and into the corresponding hole of the overhead to prevent changing the assembly position of the toothed pulley (7) in the following operations.
Loosen the screw (9) fixing the toothed pulley (7) and, using tool 99340028, drive the pulley (7) out of the camshaft.
Turn the automatic tightener (1) clockwise, positioning it as shown in frame **A**.
Turn the timing belt (10) as shown in the figure observing the precautions below.

Do not bend the timing belt. Arrows indicating the direction of assembly of the timing belt on the engine are shown on the back of the belt. The arrows must correspond to the direction of rotation of the belt and the notches must coincide with those on the pulley (7) and the gear (12).
If required to fit the timing belt (10) on the pulley (7), remove tool 99360608 (8) and turn the pulley (7) clockwise by no more than half a pulley tooth.

On completing assembly, adjust the toothed pulley (7) to put the section **X** of the belt under tension and tighten the screw (9) to a torque of 90 Nm.
Keeping the screw (2) stationary and using a suitable wrench on the hexagon of the plate (3) of the tightener, turn it anticlockwise to cover the reference hole (5) located on the fixed portion of the tightener (see frame **B**).
In the above conditions, tighten the fixing screw (2) to a torque of 36 ± 4 Nm.
Remove the tools 99360614 (6) and 99360615 (11) for the timing.
Turn the engine in its direction of rotation by 8 turns to be able to put the tools (6) and (11) back in to do the timing.
In these conditions, the notches of the timing belt (10) must coincide with those of the pulley (7) and the gear (12).

Do not turn the engine in the opposite direction; if, on turning the engine, you pass the point for inserting the tools (6) and (11), turn the engine clockwise by another two turns.

See frame C: holding the tightener plate (3) stationary with the wrench inserted in its hexagon, loosen the fixing screw (2). Keeping the fixing screw (2) stationary, turn the plate (3) clockwise until its reference mark **Λ** (4) coincides with the reference hole (5) of the fixed portion of the tightener.
In the above conditions, tighten the screw (2) to a torque of 30 ± 4 Nm.
Then complete assembly by carrying out the steps described for disassembly in reverse order.
After assembly, the belt (10) tension measured using tool 99395849 must be as follows in the following points: X, 212 ± 12 Hz - X_1, 178 ± 10 Hz.

Figure 9

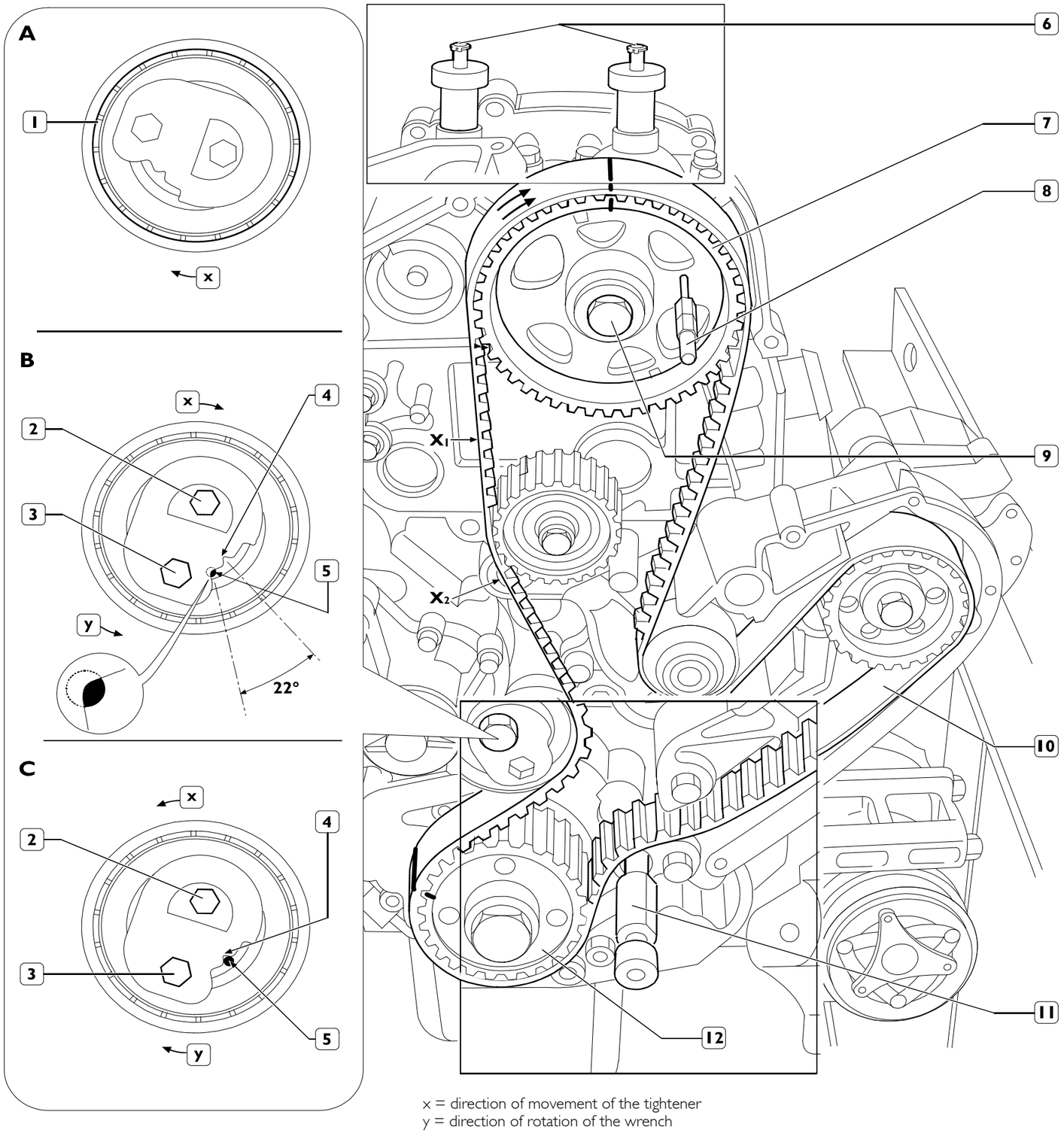

x = direction of movement of the tightener
y = direction of rotation of the wrench

85844

775010 REPLACING ELECTRO-INJECTORS

Figure 10

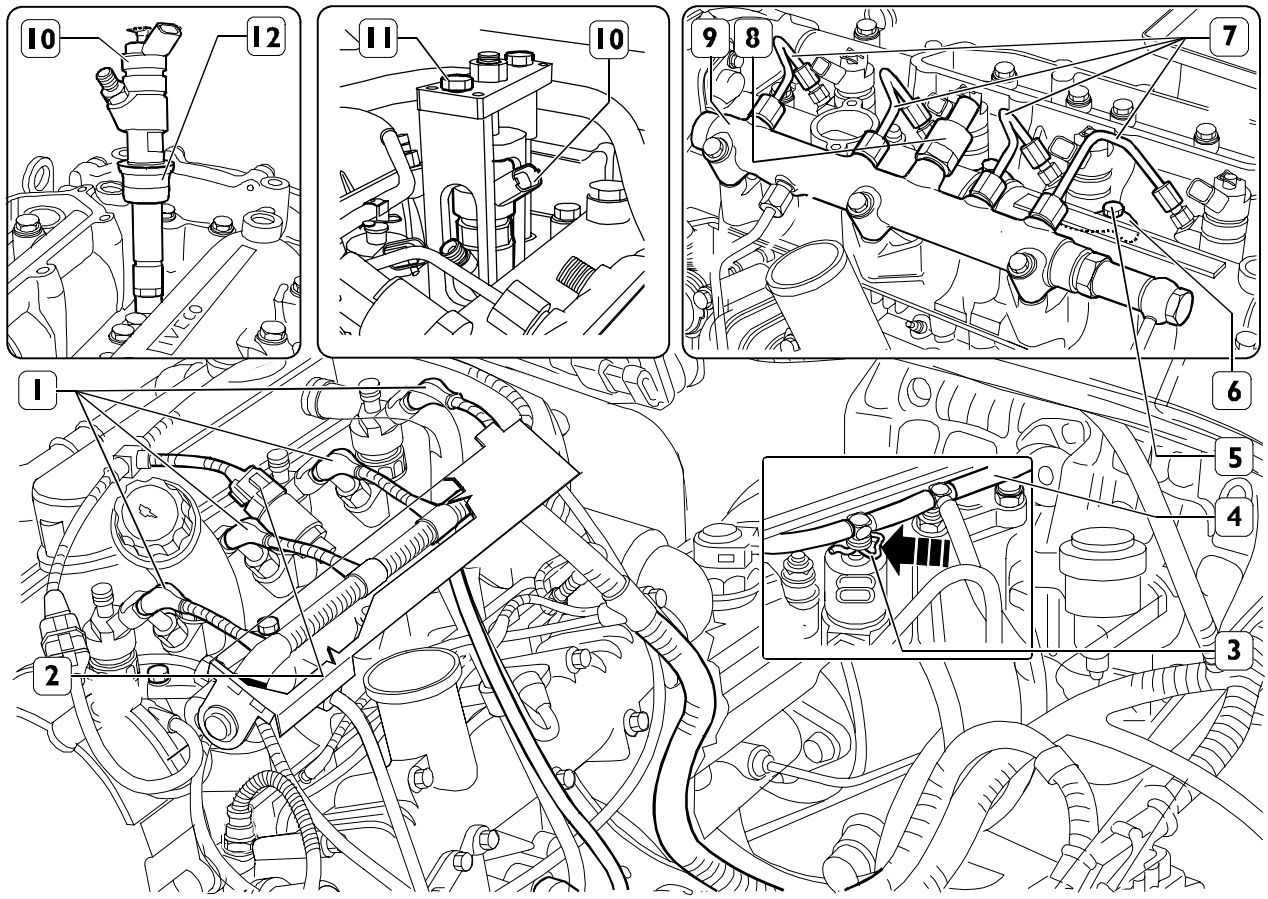

Disassembly

Partly drain the coolant off from the radiator.
Remove the plug (13, Figure 8) and detach the soundproofing cover (14, Figure 8).
Disconnect the pipes (15, Figure 8) from the pipe (16, Figure 8).
Take out the fixing screws (8, Figure 8) and remove the expansion tank (7, Figure 8). Disconnect the level indicator electrical connection from the expansion tank.
Disconnect the pipe (17, Figure 11) from the coalescence filter (2, Figure 11).
Disconnect the electrical connections (1) from the electro-injectors (10) and (2) from the fuel pressure sensor (8).
Press the springs (3) in the direction shown by the arrow and disconnect the fittings of the pipe (4) to recover fuel from the electro-injectors (10).
Disconnect the fuel pipes (7) from the electro-injectors (10) and from the hydraulic accumulator (9).
Take out the screws (6) and the brackets (5) fixing the electro-injectors (10) to the cylinder head.
Using tool 99342153 (11) extract the electro-injectors (10) from the overhead.

Assembly

Thoroughly clean the seat of the electro-injectors, taking care no foreign bodies get into the cylinder barrels.
Fit a fresh gasket (12) onto the electro-injector (10) and fit this in the overhead.

Complete assembly by carrying out the operations described for disassembly in reverse order, taking the following precautions:

- With each disassembly, the fuel pipes must be replaced with fresh ones.
- Tighten the nuts, screws and fittings to the prescribed torque.
- To tighten the fittings of the fuel pipes, use the wrench in the 99317915 series and the torque wrench 99389829.
- After assembly, replenish the coolant as described under the relevant heading.

Check assembly of the timing sensor as described under the relevant heading.

540610 CYLINDER HEAD REMOVAL AND REFITTING

Figure 11

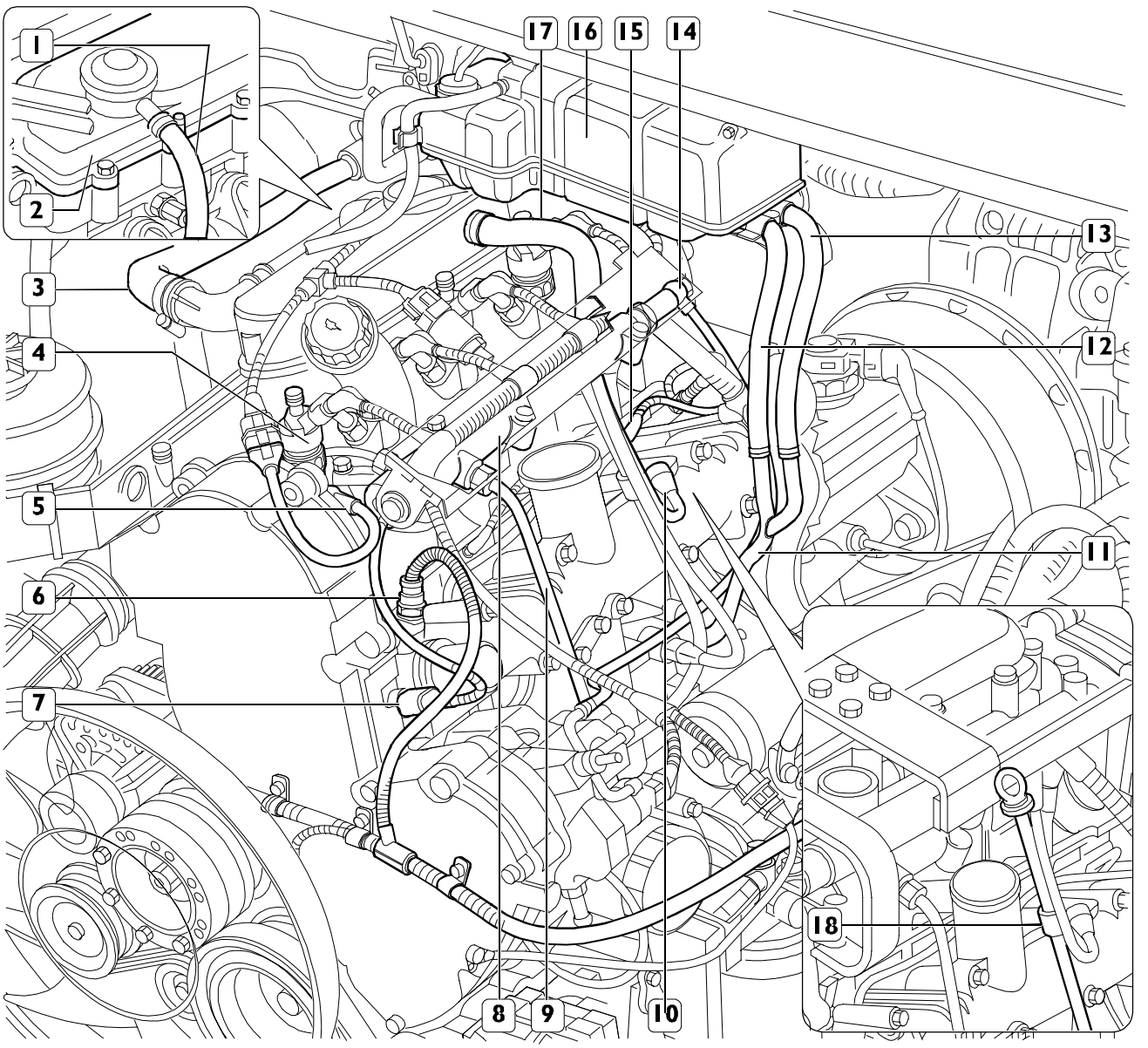

Removal

Remove the timing belt as described under the relevant heading (operation 541257).
Disconnect the coolant pipes (12) and (13) from the pipe (11).
Take out the fixing screws and remove the expansion tank (16), disconnecting the level sensor electrical connection from this.
Remove the pipe (18) for the oil dipstick from the intake manifold.
Disconnect the pipes (1) and (17) from the coalescence filter (2) and detach this from the overhead.

Disconnect the pipe (3) from the fitting.

Remove the electro-injectors (4) as described in "Replacing electro-injectors" (operation 775010).
Disconnect the electrical connections from: timing sensor (5) and remove this from the overhead, water temperature sensors (6) and (7), air pressure and temperature sensor (10), and glow plugs (15).
Detach the fuel pipe (9) from the hydraulic accumulator (8), from the high-pressure pump and from the intake manifold.
Disconnect the fuel return pipe (14) from the pressure relief valve of the hydraulic accumulator (8).

Figure 12

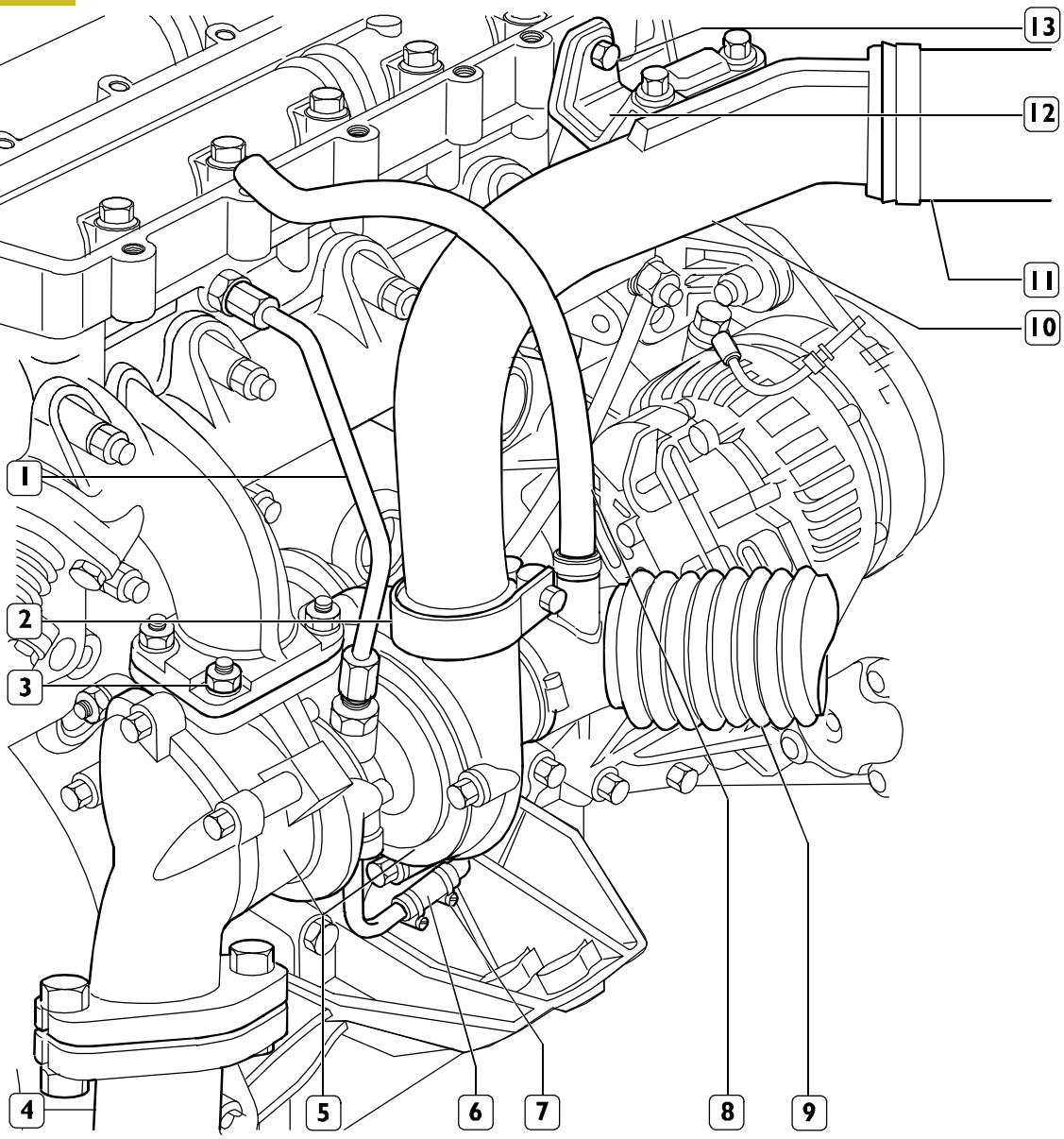

Loosen the clamp and disconnect the sleeve (11) from the air duct (10).
Loosen the collar (2), take out the screw (13) fixing the bracket (12) and detach the air duct (10).
Disconnect the oil vapour recirculation pipe (8) from the air intake sleeve (9) and disconnect this from the turbocharger (5).
Disconnect the oil pipe (1) from the cylinder head and from the turbocharger (5).
Loosen the clamp (7) and disconnect the oil pipe (6) from the crankcase union.
Take out the screws and disconnect the exhaust pipe (4) from the turbocharger (5).
Take off the nuts (3) and remove the turbocharger (5) with its gasket from the exhaust manifold.

Close the turbocharger air outlet/inlet appropriately to prevent foreign bodies accidentally getting inside and damaging it.

Take out the screws and remove the overhead together with the pins 99360614.

The pins 99360614 applied so as not to alter the timing after removing the timing belt must be removed from the overhead only if this is to be removed.

Take off the overhead gasket.
Take out the tappets and carefully put them aside.
Using the bushing 99355041, take out the glow plugs.
Take out the screws fixing the cylinder head and detach this from the crankcase.
Remove the cylinder head gasket.

Refitting

Refitting requires carrying out the operations for removal in reverse order, while taking the following precautions:
Check that the timing tools:

- 99360614 (6, Figure 9) and 99360608 (8, Figure 9) are inserted in the overhead;
- 99360615 (11, Figure 9) is inserted in the crankcase as described in "Replacing timing belt."

Check that the mating surfaces of the cylinder head and crankcase are clean.
Keep the cylinder head gasket clean.
Position the cylinder head gasket with the lettering "TOP" facing the cylinder head.

It is essential to keep the gasket sealed in its package until just before assembly.

Mount the cylinder head. Insert the screws and tighten them, in three successive stages, following the order and method shown in the following figure.

The angle closure is done with tool 99395216.

Figure 13

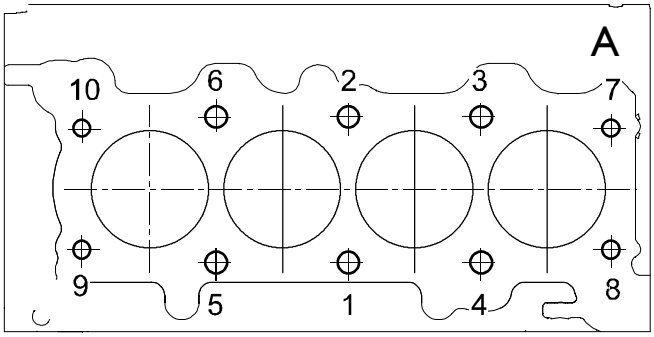

75494

Diagram of the tightening sequence for the cylinder head fixing screws:

- ❑ 1st phase: pre-tightening with torque wrench
  - screws 1-2-3-4-5-6 to a torque of 100 ±5 Nm;
  - screws 7-8-9-10 to a torque of 50 ±2.5 Nm.
- ❑ 2nd phase: angle closing
  - screws 1-2-3-4-5-6 90° ±5°;
  - screws 7-8-9-10 60° ±3°.
- ❑ 3rd phase: angle closing
  - screws 1-2-3-4-5-6 90° ±5°;
  - screws 7-8-9-10 60° ±3°.

A = flywheel side.

- Tighten the screws and nuts to the prescribed torque.
- The seals and gaskets must not be reused, but replaced with new ones.

If the engine has run for a period equivalent to = 25,000 km, the toothed timing drive belt must be replaced with a fresh one, no matter what its state of wear.

To tighten the glow plugs, use the bushing 99355041 and torque wrench 99389819.

771010 REPLACING HIGH-PRESSURE PUMP CP3

Removal

Remove the timing belt as described under the relevant heading (operation 541257).

Figure 14

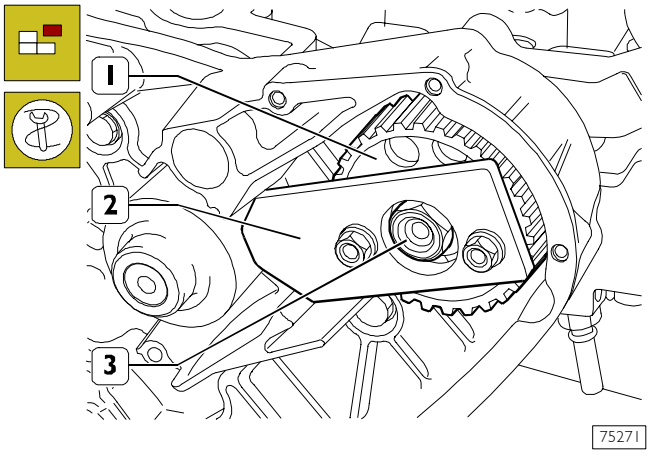

Lock rotation of the high-pressure pump gear (1) by applying tool SP. 2263 (2) as illustrated in the figure. Remove the nut (3) and take out the tool (2).

Figure 15

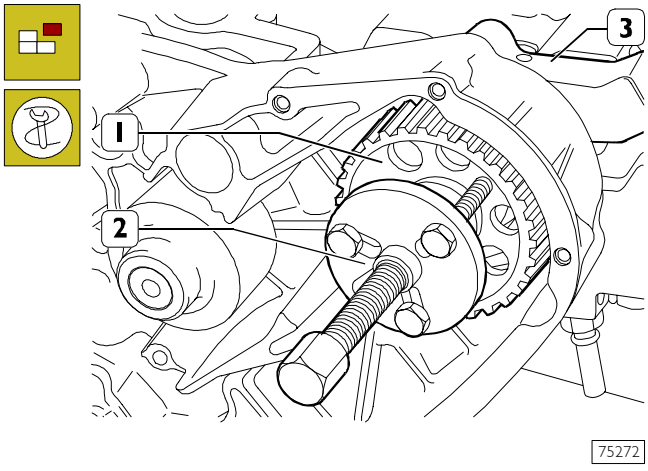

Using tool 99340035 (2) applied as shown in the figure, extract the gear (1) from the shaft of the high-pressure pump (3).

Figure 16

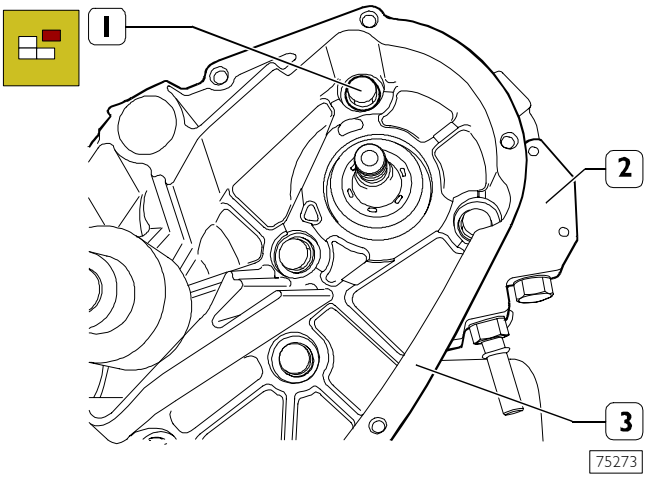

Take out the screws (1) and remove the high-pressure pump (2) from the water pump mounting (3).

Refitting

For refitting, carry out the steps described for removal in reverse order and tighten the screws and nuts to the prescribed torque.

If the engine has run for a period equivalent to = 25,000 km, the toothed timing drive belt must be replaced with a fresh one, no matter what its state of wear.

543210 REPLACING WATER PUMP

Removal

Remove the high-pressure pump as described under the relevant heading.

Figure 17

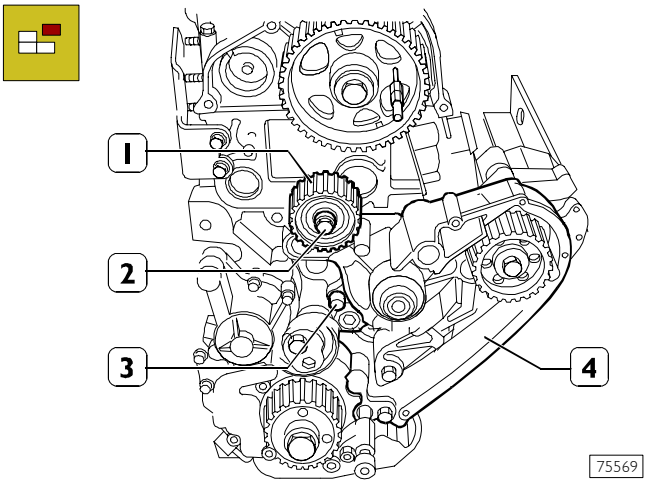

Take out the screw (2) and remove the fixed tightener (1). Take out the screws (3) and remove the water pump mounting (4).

Refitting

Fit two new seals on the water pump and fit it back on the crankcase, carrying out the operations described for removal in reverse order and tightening the screws or nuts to the prescribed torque.

EMISSIONS
Engine F1AE0481A*A (96 HP) – Engine F1AE0481B*A (116 HP)

Figure 18

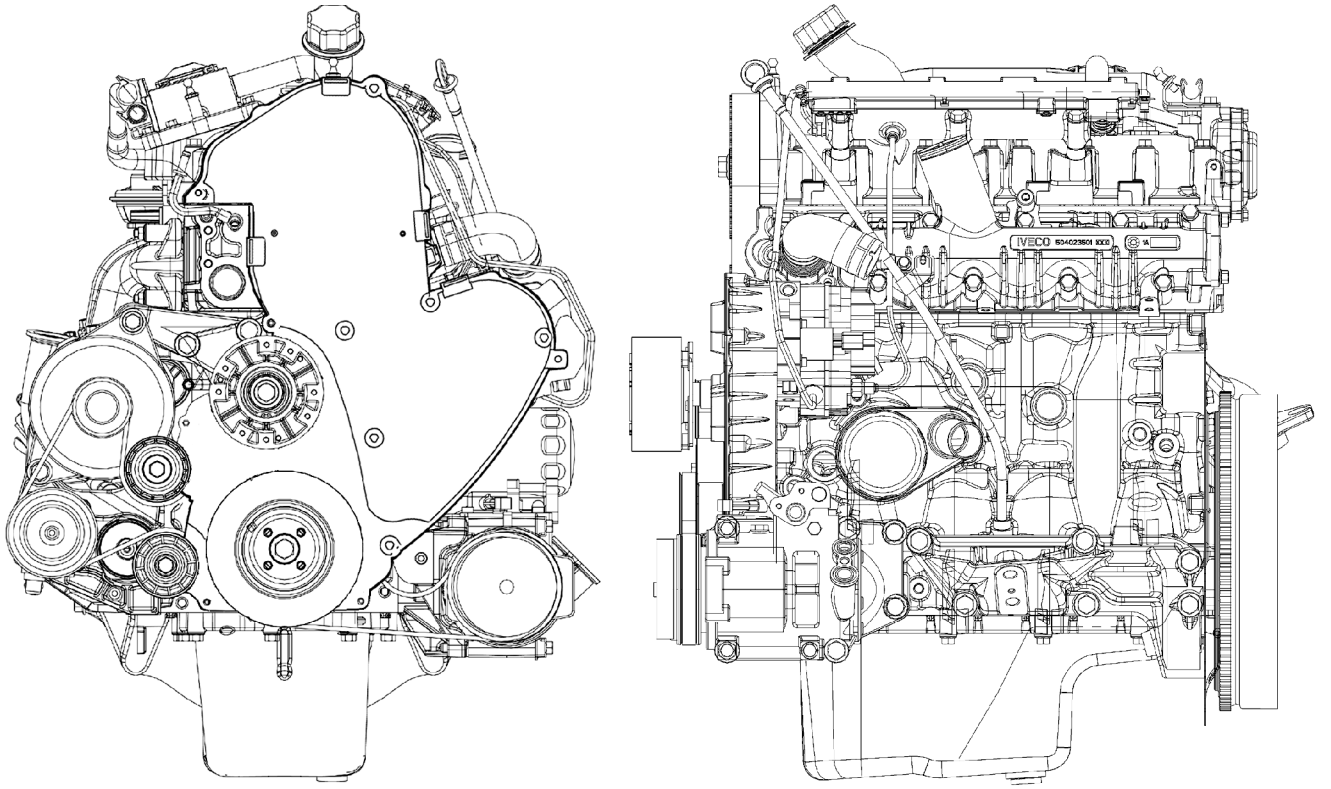

75570

Gas emissions

The engines conform to the Euro3 standards on gas emissions (measurement on engine bench according to OICA cycle), with the following limits fixed by the ESC and ELR 1999/96-2001/27 standards:

ESC:

- CO (carbon monoxide) < 2.1 g/kWh
- NOx (nitrogen oxide) < 5.0 g/kWh
- HC (unburnt hydrocarbons) < 0.66 g/kWh
- Particulate < 0.13 g/kWh

ELR: 0.8 l/m (opacity)

Test fuel: CEC RF03A084 – S ≤ 0.03%

Smokiness

The engines conform to the limits of smokiness required by EEC standards 72/306, updated 97/20 EC: 1.49 l/m with the following exhaust smoke values:

Maximum power (Bosch BSU opacimeter degrees)	1.5
Maximum torque (Bosch BSU opacimeter degrees)	1.5

Noise emissions

Maximum mean noise level, Lpa, of the standard engines measured according to ISO Std. 3745 (microphones at 1 m from the engine surfaces):

Idling	(800 rpm)	76 dBA
Full power	(3800 rpm)	96 dBA.

Engine F1AE0481B*B (116 HP with EGR)

Figure 19

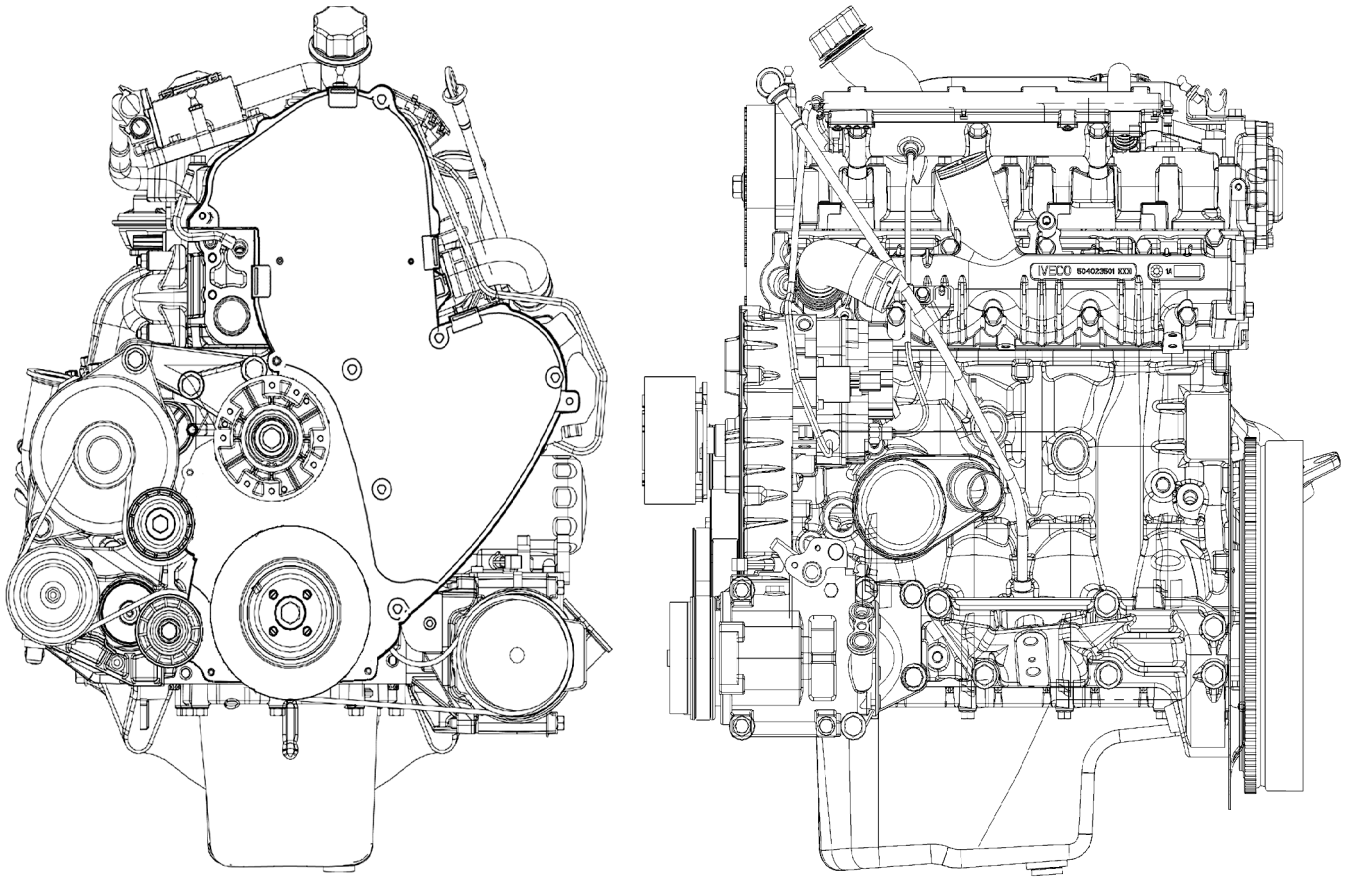

Gas emissions

The engine conforms to the Euro3 standards on gas emissions (measurement on engine bench according to OICA cycle), with the following limits fixed by the ESC and ELR 1999/96-2001/27 standards:

ESC:

- CO (carbon monoxide) < 0.95 g/kWh
- NOx (nitrogen oxide) < 0.78 g/kWh
- HC + NOx (unburnt hydrocarbons) < 0.86 g/kWh
- Particulate < 0.1 g/kWh

ELR: 0.8 l/m (opacity)

Test fuel: CEC RF03A084 – S ≤ 0.03%

Smokiness

The engine conforms to the limits of smokiness required by EEC standards 72/306, updated 97/20 EC: 1.49 l/m with the following exhaust smoke values:

Maximum power (Bosch BSU opacimeter degrees)	1.5
Maximum torque (Bosch BSU opacimeter degrees)	2.5
Full load at 1000 rpm (Bosch BSU opacimeter degrees)	3.5

Noise emissions

Maximum mean noise level, Lpa, of the standard engines measured according to ISO Std. 3745 (microphones at 1 m from the engine surfaces):

Idling	(800 rpm)	76 dBA
Full power	(3800 rpm)	96 dBA.

ENGINE IDENTIFICATION CODE

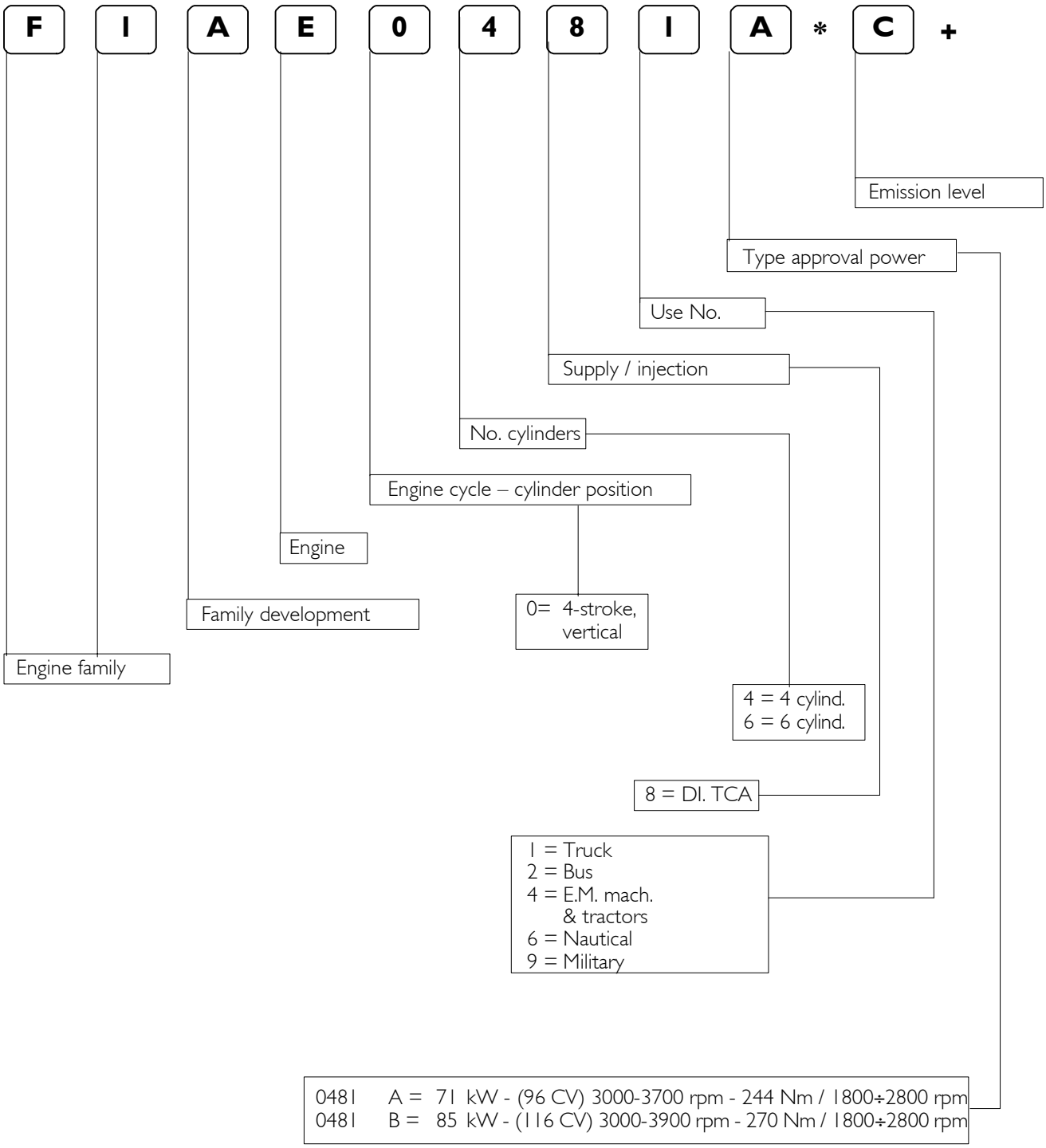

Figure 20

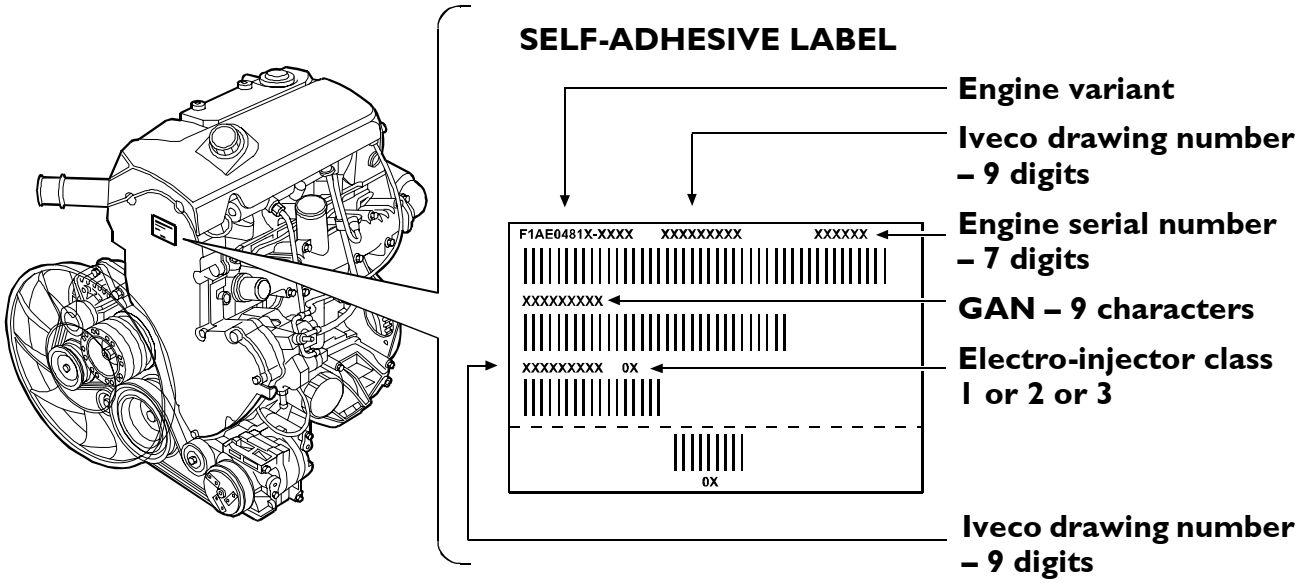

75243

Figure 21

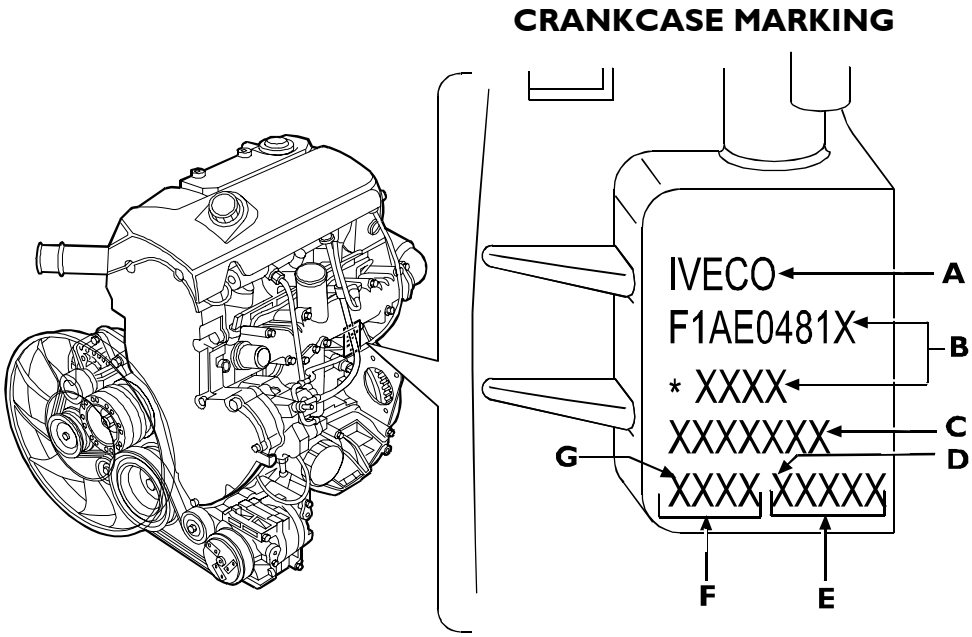

75244

	EXAMPLE
A = IVECO trademark	IVECO
B = IVECO name of engine variant **	F1AE0481A * A001
C = Engine serial number	1359862
D = 1st digit, main journal no. 1 (engine front)	
E = Main bearing selection diameters	12345
F = Barrel selection diameters	1234
G = 1st digit, cylinder no. 1 (engine front)	

(**) Data obtainable from "XZ" engine ordering number information

GENERAL SPECIFICATIONS

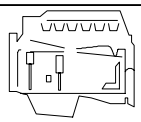	Type		F1AE0481 A	F1AE0481 B
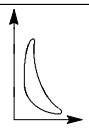	Cycle		Diesel 4 strokes	
	Supply		Turbocharged with intercooler	
	Injection		Direct	
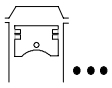	Number of cylinders		4 in line	
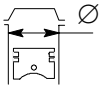	Bore	mm	88	
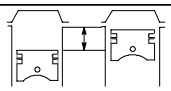	Stroke	mm	94	
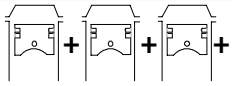	Total displacement	cm^3	2300	
Q	Compression ratio		18	
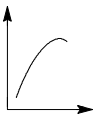 	Maximum power	kW (HP) rpm	71 (96) 3000 ÷ 3700	85 (116) 3000 ÷ 3900
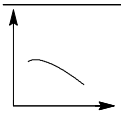 	Maximum torque	kW (HP) rpm	240 (24.4) 1800 ÷ 2800	270 (27.5) 1800 ÷ 2800
	Slow running of engine with no load	rpm	800	
	Fast idling speed of engine with no load	rpm	4600	
	Pressure at T.D.C.	*bar	20 ÷ 26	
	Minimum permissible pressure at T.D.C.	*bar	16	

(*) The pressure is measured by setting the engine turning with the aid of just the starter motor, with an oil temperature of 40 – 50°C.

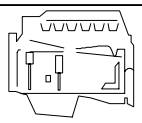	Type	F1AE0481 A	F1AE0481 B
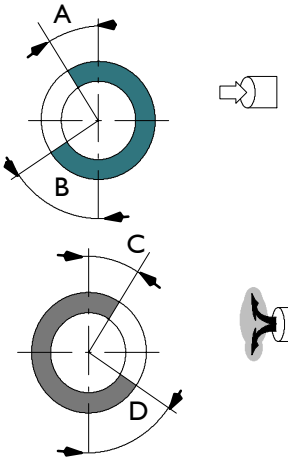	TIMING SYSTEM Start before T.D.C. A end after B.D.C. B Start before T.D.C. D end after B.D.C. C	 10° 27° 50° 10°	
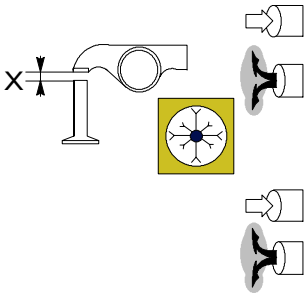	For timing check X mm mm Operation X mm mm	 - - - -	
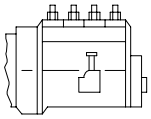	SUPPLY	High pressure electronic fuel feed system BOSCH MS6.3 to chassis number (...) and BOSCH EDC16 from chassis number (...). Composed of CP3 high-pressure pump, electro-injectors, hydraulic accumulator (rail), EDC control unit, pressure and temperature sensors	
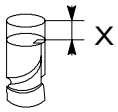	Pump setting With piston no.1 at T.D.C. Start of delivery mm	- -	
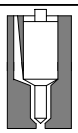	Electro-injectors type	BOSCH	
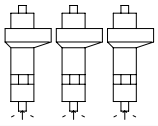	Injection sequence	1- 3 - 4 - 2	
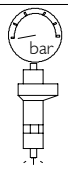	Injection pressure bar	1350	

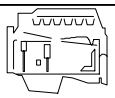	Type	F1AE0481 A	F1AE0481 B
	TURBOCHARGING	With intercooler	
	Turbocharger type	KKK K03-2072-EDC 5.68	
	Turbocharger shaft radial play	-	
	Turbocharger shaft end float	-	
	Maximum stroke of pressure relief valve opening mm	3.5 ±0.5	
	Pressure corresponding to maximum stroke: bar	1.5 ±0.002	
	LUBRICATION	forced by gear pump, pressure relief valve, oil filter with integral cartridge with total filtering	
 	Oil pressure with engine hot (100°C ±5°C):		
	at idling speed bar	≥0.6	
	at top speed bar	4	
	COOLING	by centrifugal pump, thermostat for adjustment, coolant temperature, fan with electromagnetic coupling, radiator, heat exchanger	
	Water pump control:	by belt	
	Thermostat:	N. I.	
	start of opening:	82 ±2°C	
	FLUIDS		
	Capacity:		
	engine sump		
	at minimum level liters	3	
	kg	2.65	
	engine sump		
	at maximum level litres	4.5	
 **ACEA B3 5 W 30**	kg	3.95	
	quantity in circulation in cartridge filter and heat exchanger		
	litres	1	
	kg	0.85	
	quantity of oil for first filling liters	5.5	
	kg	4.85	

ASSEMBLY DATA – CLEARANCES

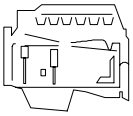	Type	F1AE0481 A	F1AE0481 B
CYLINDER ASSEMBLY AND CRANK MEMBERS		mm	
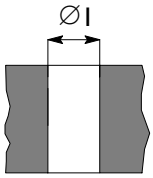	Cylinder liners:		
	Ø 1	88.002 ÷ 88.022	
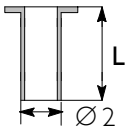	Cylinder liners:	-	
	outside diameter Ø	-	
	length L	-	
	Cylinder liners – crankcase seats (interference)	-	
	Outside diameter Ø 2	-	
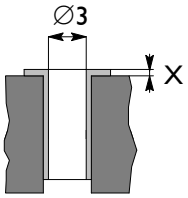	Cylinder liners: (protrusion from bottom of crankcase)	-	
	inside diameter Ø 3	-	
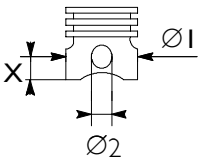	Pistons: supplied as spares type	-	
	measurement X	8	
	outside diameter Ø 1	87.832 ÷ 87.846	
	seat for pin Ø 2	31.003 ÷ 31.009	
	Piston – cylinder liners	0.156 ÷ 0.190	
	Piston diameter Ø 1	0.4	
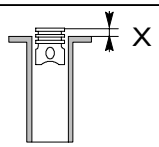	Piston protrusion from crankcase X	0.3 ÷ 0.6	
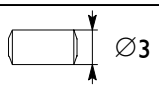	Piston gudgeon pin Ø 3	30.990 ÷ 30.996	
	Piston gudgeon pin – pin seat	0.07 ÷ 0.019	

	Type	F1AE0481 A	F1AE0481 B
	CYLINDER ASSEMBLY AND CRANK MEMBERS	mm	
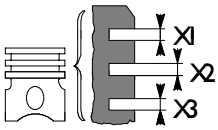	Type of piston	-	
	Piston ring slots X1*	2.200 ÷ 2.230	
	Piston ring slots X2	2.050 ÷ 2.070	
	Piston ring slots X3	2.540 ÷ 2.560	
	* measured on ∅ of 85 mm		
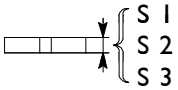	Piston rings: S 1*	2.068 ÷ 2.097	
	Piston rings: S 2	1.970 ÷ 1.990	
	Piston rings: S 3	2.470 ÷ 2.490	
	* measured on ∅ 85 mm		
	Piston rings – slots 1	0.103 ÷ 0.162	
	Piston rings – slots 2	0,060 ÷ 0.100	
	Piston rings – slots 3	0.050 ÷ 0.090	
	Piston rings	0.4	
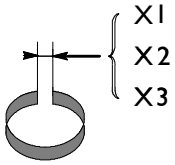	Piston ring end opening in cylinder liner:		
	X1	0.20 ÷ 0.35	
	X2	0.60 ÷ 0.80	
	X3	0.25 ÷ 0.50	
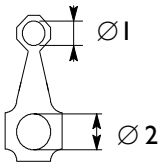	Small end bushing seat ∅ 1	34.460 ÷ 34.490	
	Connecting rod bearing seat* ∅ 2	62.833 ÷ 62.841	
	* connecting rod supplied as spare part		
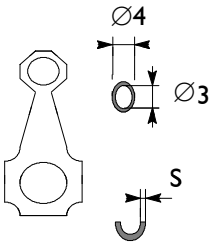	Small end bushing diameter		
	outside ∅ 4	34.560 ÷ 34.585	
	inside ∅ 3	31.010 ÷ 31.020	
	Big end bearing shells supplied as spare part S	-	
	Small end bushing – seat (interference)	0.07 ÷ 0.125	
	Piston gudgeon pin – bushing	0.014 ÷ 0.030	
	Big end bearing shells	0.254 - 0.508	

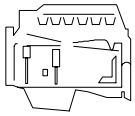	Type	F1AE0481 A	F1AE0481 B
CYLINDER ASSEMBLY AND CRANK MEMBERS		mm	
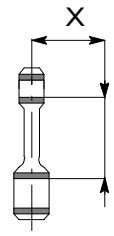	Measurement X	125	
	Maximum error on alignment of connecting rod axes =	0.09	
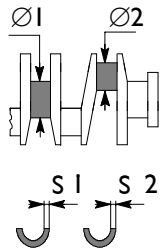	Main journals Ø 1 No. 1-2-3-4 No. 5	71.182 ÷ 71.208 76.182 ÷ 76.208	
	Crankpins Ø 2	59.015 ÷ 59.038	
	Main bearing shells S1*	2.165 ÷ 2.174	
	Big end bearing shells S2*	1.883 ÷ 1.892	
	* supplied as spare parts		
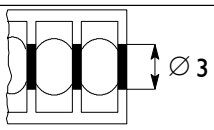	Main bearing housings Ø 3 No. 1-2-3-4 No. 5	75.588 ÷ 75.614 80.588 ÷ 80.614	
	Bearing shells - main journals	0.032 ÷ 0.102	
	Bearing shells – crankpins	0.035 ÷ 0.083	
	Main bearing shells	0.254 ÷ 0.508	
	Big end bearing shells	0.254 ÷ 0.508	
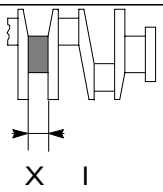	Main journal for shoulder X 1	31.020 ÷ 31.170	
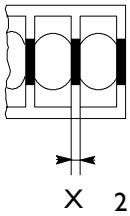	Main bearing housing for shoulder X 2	25.790 ÷ 25.840	
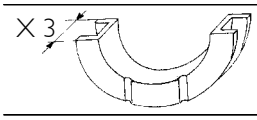	Half thrust washers X 3	30.810 ÷ 30.960	
	Crankshaft shoulder	0.060 ÷ 0.260	

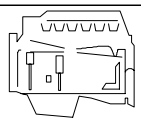 Type	F1AE0481 A	F1AE0481 B
CYLINDER HEAD – TIMING SYSTEM		
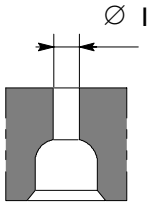 Guide valve seats on cylinder head Ø1	9.980 ÷ 10.000	
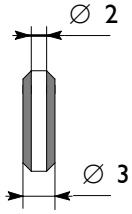 Valve guides Ø 2 Ø 3	6.023 ÷ 6.038 10.028 ÷ 10.039	
Valve guides and seats on head (interference)	0.028 ÷ 0.059	
IVECO PARTS Valve guides	0.05 - 0.10 - 0.25	
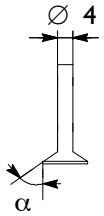 Valves: Ø 4 α Ø 4 α	5.975 ÷ 5.990 44°45' ± 7.5' 5.975 ÷ 5.990 44°45' ± 7.5'	
Valve stem and relevant guide	0.033 ÷ 0.063	
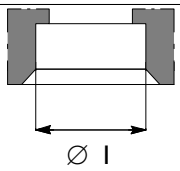 Seat on head for valve seat: Ø1 Ø1	31.390 ÷ 31.415 31.390 ÷ 31.415	
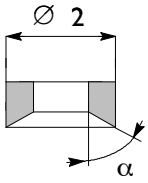 Outside diameter of valve seats; angle of valve seats on cylinder head: Ø 2 α Ø 2 α	31.495 ÷ 31.510 44.5° ± 5' 31.495 ÷ 31.510 44.5° ± 5'	
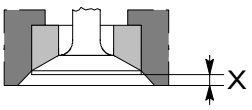 Recessing X X	0.5 ÷ 0.8 0.5 ÷ 0.8	
Between valve seat and head	0.08 - 0.12 0.08 - 0.12	
IVECO PARTS Valve seats	-	

	Type	F1AE0481 A	F1AE0481 B
CYLINDER HEAD – TIMING SYSTEM		mm	
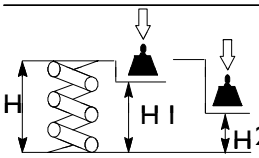	Valve spring height: free spring H under a load of: N243 ± 12 H1 N533 ± 24 H2	 54 45 35	
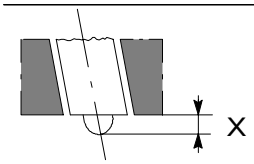	Injector protrusion X	2.77 ÷ 3.23	
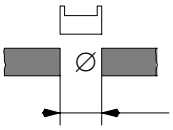	Seats for tappets on cylinder head normal Ø	12.016 ÷ 12.034	
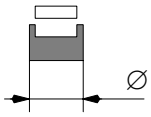	Normal diameter tappets	11.988 ÷ 12.000	
	Between tappets and seats	0.016 ÷ 0.046	
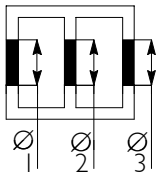	Camshaft pin seats in cylinder overhead 1 ⇒ 7 Ø 1 Ø 2 Ø 3	 48.987 ÷ 49.013 46.987 ÷ 47.013 35.987 ÷ 36.013	
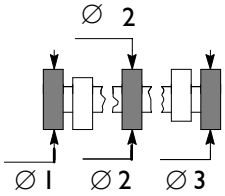	Camshaft supporting pins: Ø 1 Ø 2 Ø 3	 48.925 ÷ 48.950 46.925 ÷ 46.950 35.925 ÷ 35.950	
	Supporting pins and seats	0.037 ÷ 0.088	
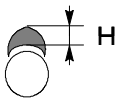	Useful cam height H H	 3.77 4.203	

TOOLS

TOOL No.		DESCRIPTION
99305047	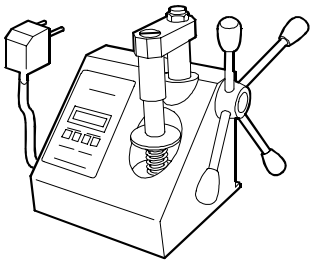	Appliance to check spring loads
99317915	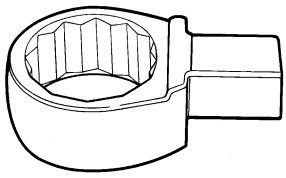	Set of six box-type wrenches (14-17-19 mm)
99322205	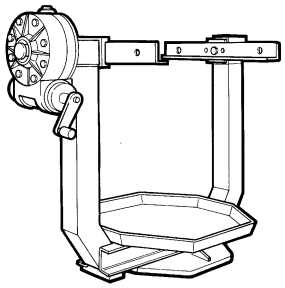	Rotary telescopic stand for overhauling assemblies (capacity 700 daN, torque 120 daN/m)
99340028	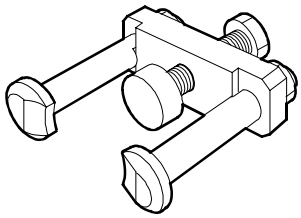	Extractor for camshaft pulley
99340035	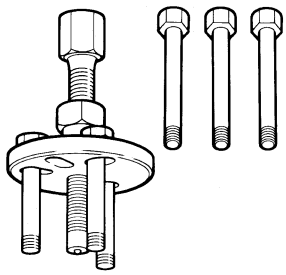	High-pressure pump toothed pulley extractor
99340057	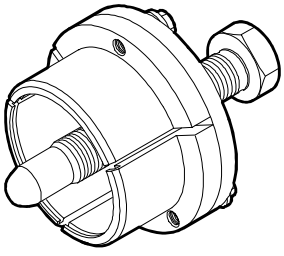	Tool to remove crankshaft front gasket

TOOLS

TOOL No.		DESCRIPTION
99340058	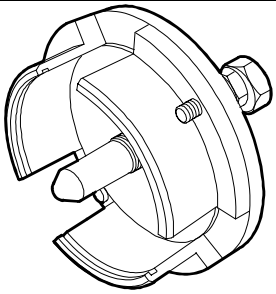	Tool to remove crankshaft rear gasket
99342153	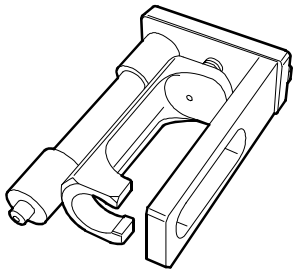	Tool to extract injectors
99346254	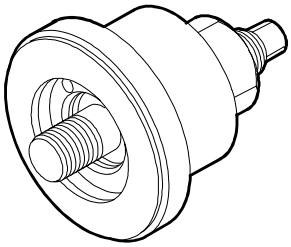	Keying device for mounting crankshaft front gasket
99346255	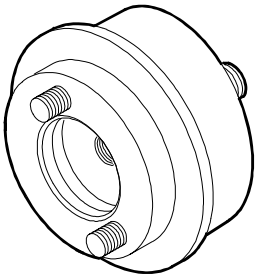	Keying device for mounting crankshaft rear gasket
99360076	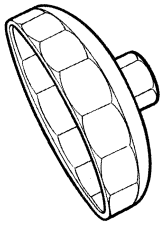	Tool to remove cartridge filters
99360183	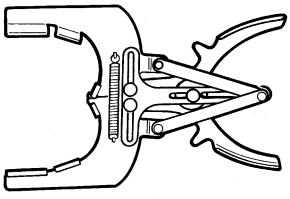	Pliers for mounting rings on engine pistons

TOOLS

TOOL No.		DESCRIPTION
99360260	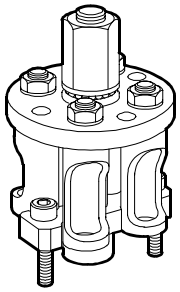	Tool for removing and refitting engine valves
99360306	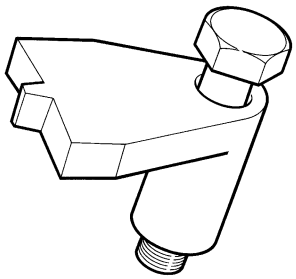	Tool to retain engine flywheel
99360544	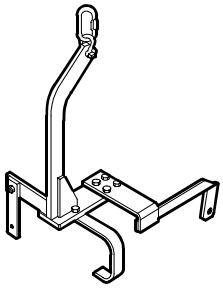	Arm for removing and refitting engine
99360605	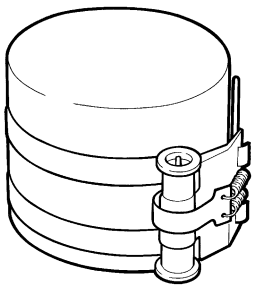	Band to insert standard and oversized pistons into the cylinders
99360608	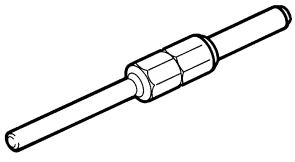	Tool for positioning timing gear
99360614	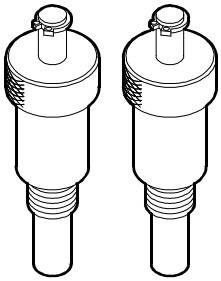	Tool (2) for camshaft timing

TOOLS

TOOL No.		DESCRIPTION
99360615	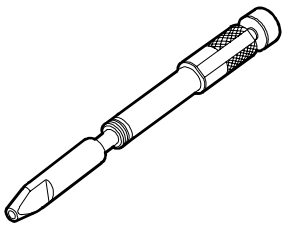	Tool for crankshaft timing
99361038	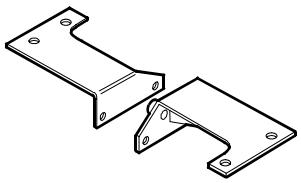	Brackets securing engine to rotary stand 99322205
99367121	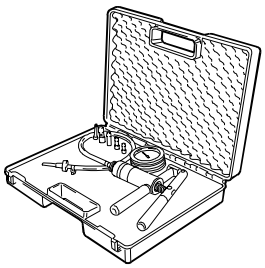	Manual pump to measure pressure and vacuum
99374458	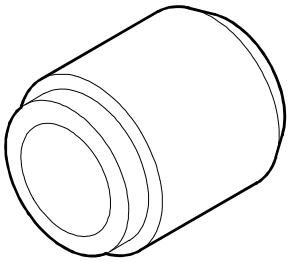	Keying device for mounting oil seal gasket on camshaft front cover
99389819	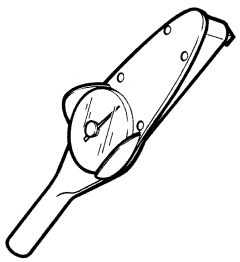	Torque wrench (0-10 Nm) with square 1/4" connection
99389829	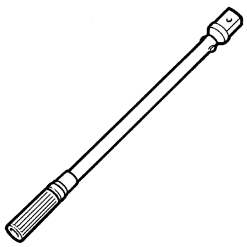	9x12 coupling torque wrench (5-60 Nm)

TOOLS

TOOL No.		DESCRIPTION
99394038	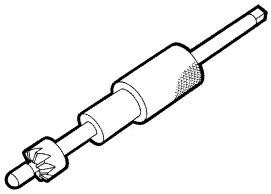	Milling cutter to regrind injector seat (8140.63 engine excluded)
99395216	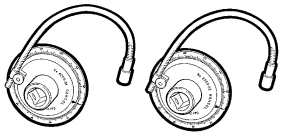	Pair of meters for angular tightening with square 1/2" and 3/4" connection
99395363	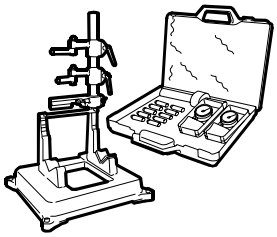	Complete square to check for connecting rod distortion
99395687	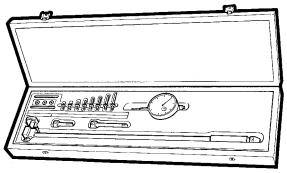	Bore meter (50 – 178 mm)
99395849	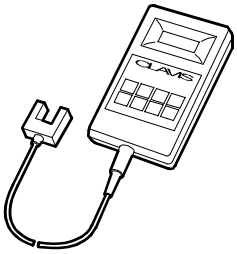	Device for checking belt tension (frequency from 10.0 to 600 Hz)

TOOLS

TOOL No.		DESCRIPTION
99396037	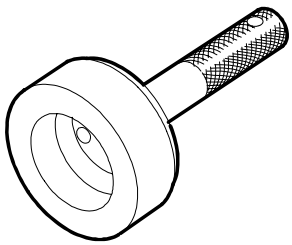	Centring ring for crankshaft front gasket cover

EXPERIMENTAL TOOLS

This section shows the working drawings for the experimental tools (S.P.) used in overhauling the engine described in this section, which may be made by the repair shops.

VARIA DA ART. COMMERCIALE USAG cod.235L 1/2" – Ch.19

SOLO PER QUANTO INDICATO

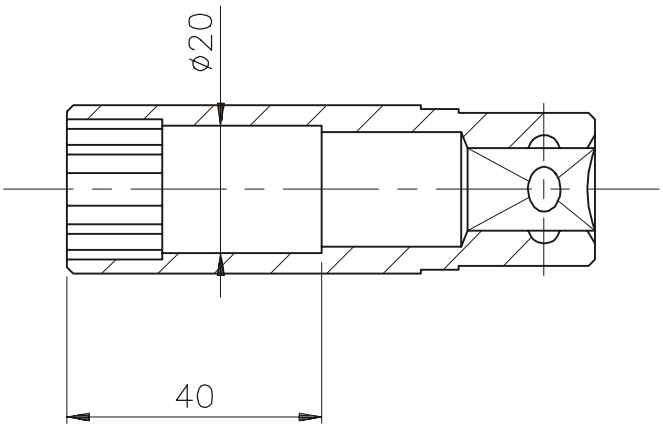

Modification:

For the permissible errors on the dimensions without tolerance and for other general specifications, see IVECO *STD 10–2311*

MAT.	COVER.	DRAWN	N°DRAWING
/	/	UTS (B)	SP. 2262

All proprietary rights reserved by IVECO
This drawing shall not be reproduced or in any way utilised, for the manufacture or the component or unit herein illustrated and must not be released to other parties, without written consent.
Any infringement will be legally pursued.

ISO ≤ IT8
∢ ≤ 30'
Ra ≤ 0.4

C/ I.S. 18-0011

Chiave poligonale (19mm)		APPROVED	EXPER. 2262 / SIZE A4
per sensore pompa acqua		DATE 19/06/2001	SHEET
		SUPERSEDES	
		SCALE 1:1	IVECO
MOTORE F1A		Q.TY 1	02

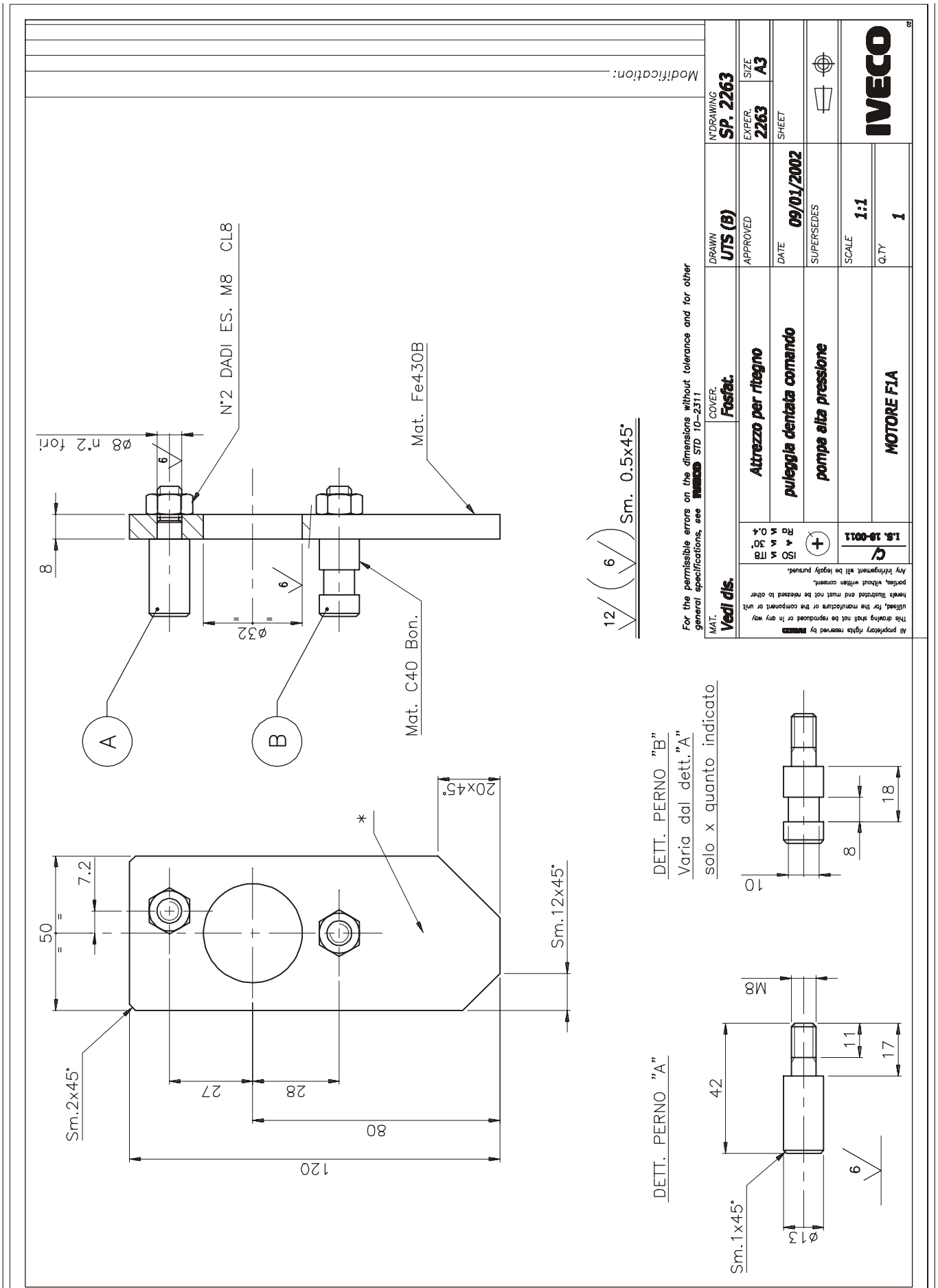
Modification:
N°2 DADI ES. M8 CL8
Mat. Fe430B
Mat. C40 Bon.
Ø8 n°2 fori
Ø32
Sm. 0.5x45°
A
B
20x45°
Sm.12x45°
Sm.2x45°
DETT. PERNO "B"
Varia dal dett."A"
solo x quanto indicato
DETT. PERNO "A"
Sm.1x45°
Ø13
M8
For the permissible errors on the dimensions without tolerance and for other general specifications, see IVECO STD 10-2311
MAT. Vedi dis.
COVER. Fosfat.
DRAWN UTS (B)
N°DRAWING SP. 2263
APPROVED
EXPER. 2263
SIZE A3
Attrezzo per ritegno
puleggia dentata comando
pompa alta pressione
DATE 09/01/2002
SHEET
SUPERSEDES
SCALE 1:1
Q.TY 1
MOTORE F1A
IVECO
All proprietary rights reserved by IVECO
This drawing shall not be reproduced or in any way utilised, for the manufacture or the component or unit herein illustrated and must not be released to other parties, without written consent.
Any infringement will be legally pursued.

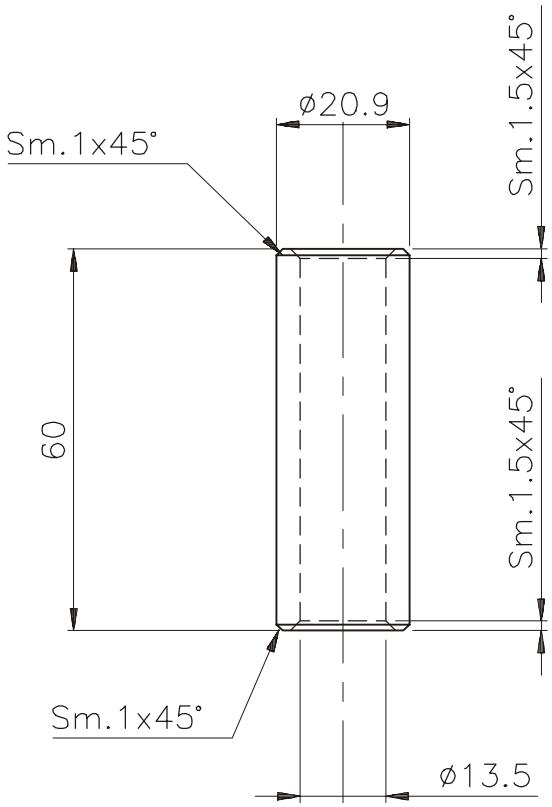

Modification:

For the permissible errors on the dimensions without tolerance and for other general specifications, see IVECO *STD 10-2311*

MAT.	COVER.	DRAWN	N°DRAWING
Pom / Nylon	/	UTS (B)	SP. 2264

All proprietary rights reserved by IVECO. This drawing shall not be reproduced or in any way utilised, for the manufacture or the component or unit herein illustrated and must not be released to other parties, without written consent. Any infringement will be legally pursued.

ISO ≤ ITB 4 ≤ 30' Ra ≤ 0.4

C/ I.S. 18-0011

Perni di centraggio sovratesta	APPROVED	EXPER. 2264 / SIZE A4
e per piantaggio guarnizione	DATE 19/06/2001	SHEET
guida valvole	SUPERSEDES	
	SCALE 1:1	IVECO
MOTORE F1A	Q.TY 2	02

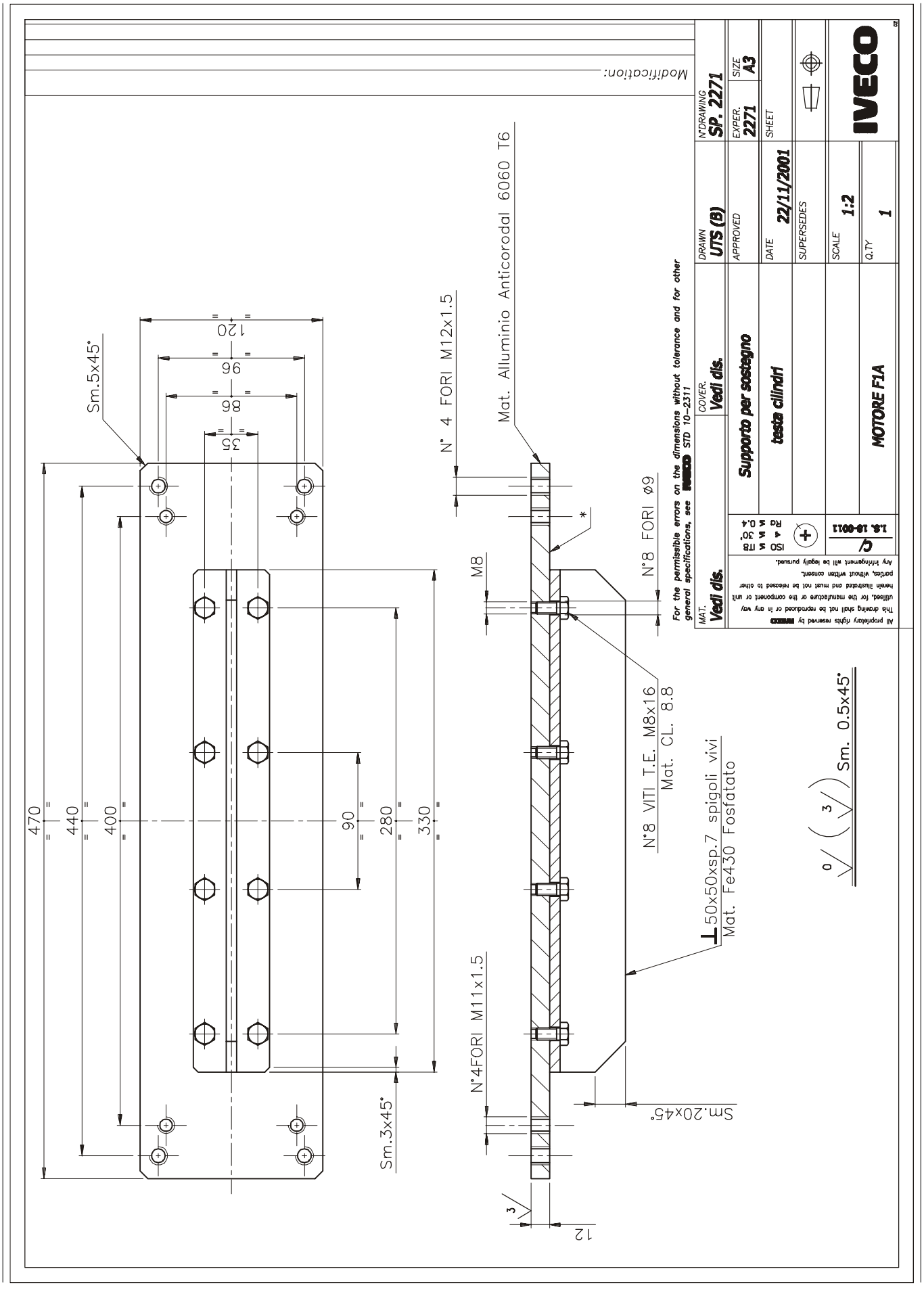
Modification:
Sm.5x45°
120
96
86
35
470
440
400
90
280
330
Sm.3x45°
N° 4 FORI M12x1.5
Mat. Alluminio Anticorodal 6060 T6
M8
N°8 FORI ø9
N°8 VITI T.E. M8x16
Mat. CL. 8.8
50x50xsp.7 spigoli vivi
Mat. Fe430 Fosfatato
N°4FORI M11x1.5
Sm.20x45°
12
Sm. 0.5x45°
For the permissible errors on the dimensions without tolerance and for other general specifications, see IVECO STD 10-2311
MAT. Vedi dis.
COVER. Vedi dis.
DRAWN UTS (B)
APPROVED
DATE 22/11/2001
SUPERSEDES
SCALE 1:2
Q.TY 1
N°DRAWING SP. 2271
EXPER. 2271
SIZE A3
SHEET
Supporto per sostegno
testa cilindri
MOTORE F1A
IVECO
All proprietary rights reserved by IVECO
This drawing shall not be reproduced or in any way utilised, for the manufacture or the component or unit herein illustrated and must not be released to other parties, without written consent.
Any infringement will be legally pursued.

VARIA DA ART. COMMERCIALE USAG cod.235EL 1/4" – Ch.8

SOLO PER QUANTO INDICATO

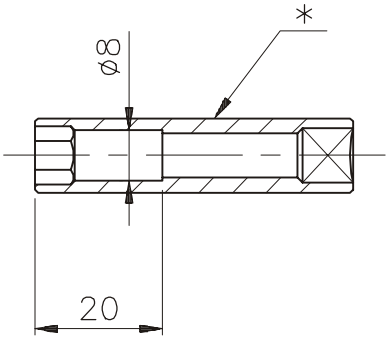

6 Sm. 0.5x45°

For the permissible errors on the dimensions without tolerance and for other general specifications, see IVECO *STD 10–2311*

Modification:

MAT.	COVER.	DRAWN	N°DRAWING
/	/	UTS (B)	SP. 2275

All proprietary rights reserved by IVECO. This drawing shall not be reproduced or in any way utilised, for the manufacture or the component or unit herein illustrated and must not be released to other parties, without written consent. Any infringement will be legally pursued.

ISO ≤ IT8 ≤ 30' Ra ≤ 0.4

Bussola (8 mm) per montaggio/ smontaggio candelette		APPROVED	EXPER. 2275 / SIZE A4
		DATE 25/07/2001	SHEET
		SUPERSEDES	
C/ I.S. 18-0011		SCALE 1:1	IVECO
	MOTORE F1A	Q.TY 1	02

PARTIC. DENTE – Scala 10:1

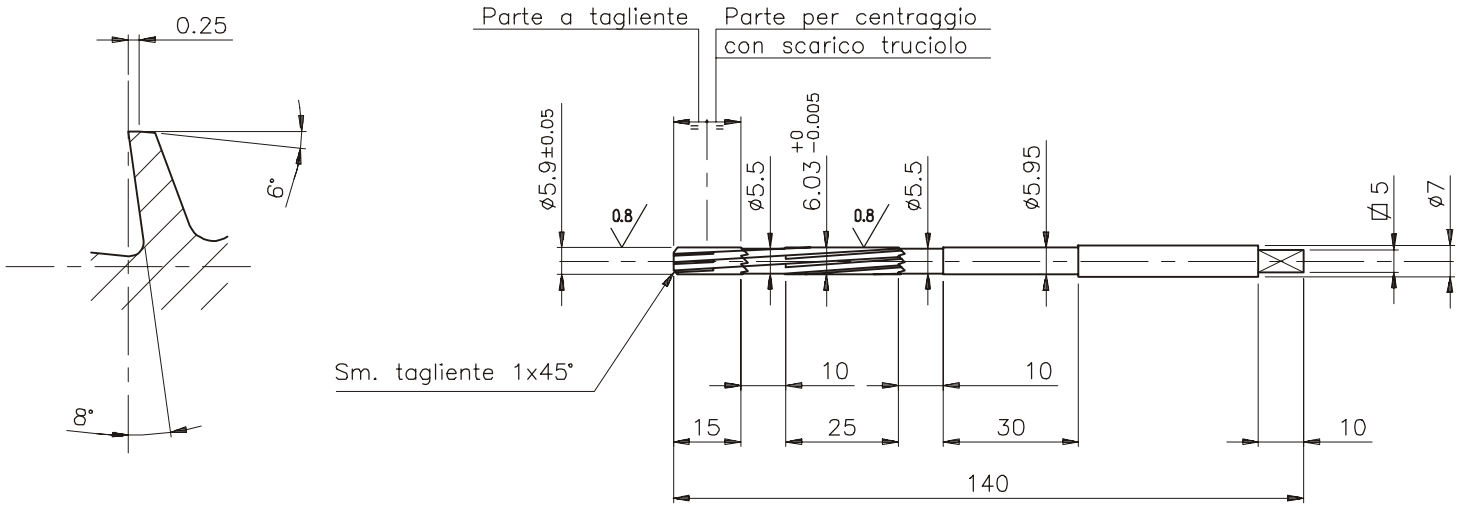

N° 6 DENTI – ELICA SINISTRA – INCLINAZIONE 6°

Modification:

For the permissible errors on the dimensions without tolerance and for other general specifications, see IVECO *STD 10–2311*

MAT.	COVER.	DRAWN	N°DRAWING
UNI U100WC HRC 62÷64	/	UTS (B)	SP. 2310

Lisciatoio per guida valvole	APPROVED	EXPER. 2310	SIZE A3
	DATE 10/12/2001	SHEET	
	SUPERSEDES		
	SCALE 1:1	IVECO	
MOTORE F1A	Q.TY 1		

ISO ≤ IT8 ⌀ ≤ 30° Ra ≤ 0.4

C/ 1.8.10-0011

All proprietary rights reserved by IVECO. This drawing shall not be reproduced or in any way utilised, for the manufacture or the component or unit herein illustrated and must not be released to other parties, without written consent. Any infringement will be legally pursued.

02

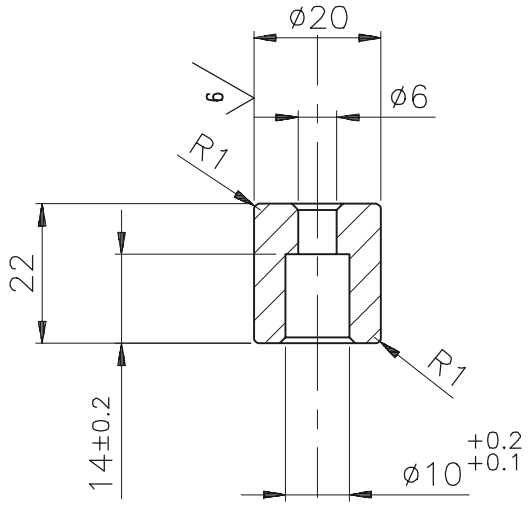

Modification:

For the permissible errors on the dimensions without tolerance and for other general specifications, see IVECO *STD 10–2311*

MAT.	COVER.	DRAWN	N°DRAWING
39NiCrMo3 Bon.	Fosfat.	UTS (B)	SP. 2311

All proprietary rights reserved by IVECO. This drawing shall not be reproduced or in any way utilised, for the manufacture or the component or unit herein illustrated and must not be released to other parties, without written consent. Any infringement will be legally pursued.

ISO ≤ ITB 4 ≤ 30' Ra ≤ 0.4

C/ I.S. 18-0011

Battitoio per piantaggio	APPROVED	EXPER. 2311 / SIZE A4
guida valvole	DATE 10/12/2001	SHEET
(usare con sp. 2312)	SUPERSEDES	
	SCALE 1:1	IVECO
MOTORE F1A	Q.TY 1	02

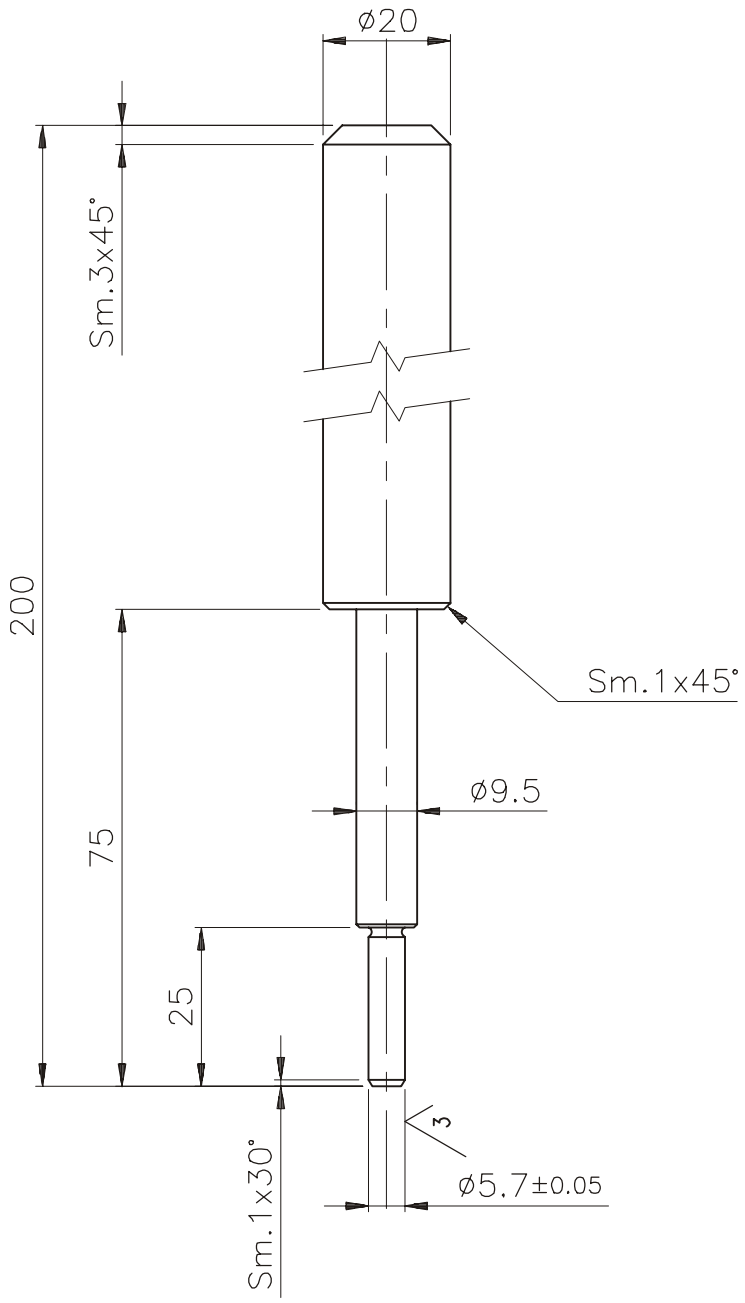

Modification:

For the permissible errors on the dimensions without tolerance and for other general specifications, see IVECO *STD 10-2311*

MAT.	COVER.	DRAWN	N°DRAWING
39NiCrMo3 Bon.	Fosfat.	UTS (B)	SP. 2312

All proprietary rights reserved by IVECO
This drawing shall not be reproduced or in any way utilised, for the manufacture or the component or unit herein illustrated and must not be released to other parties, without written consent.
Any infringement will be legally pursued.

ISO ≤ IT8
4 ≤ 30'
Ra ≤ 0.4

C/
I.S. 18-0011

Battitoio per spiantaggio	APPROVED	EXPER. 2312	SIZE A4
guida valvole	DATE 10/12/2001	SHEET	
	SUPERSEDES		
	SCALE 1:1	IVECO	
MOTORE F1A	Q.TY 1		

oz

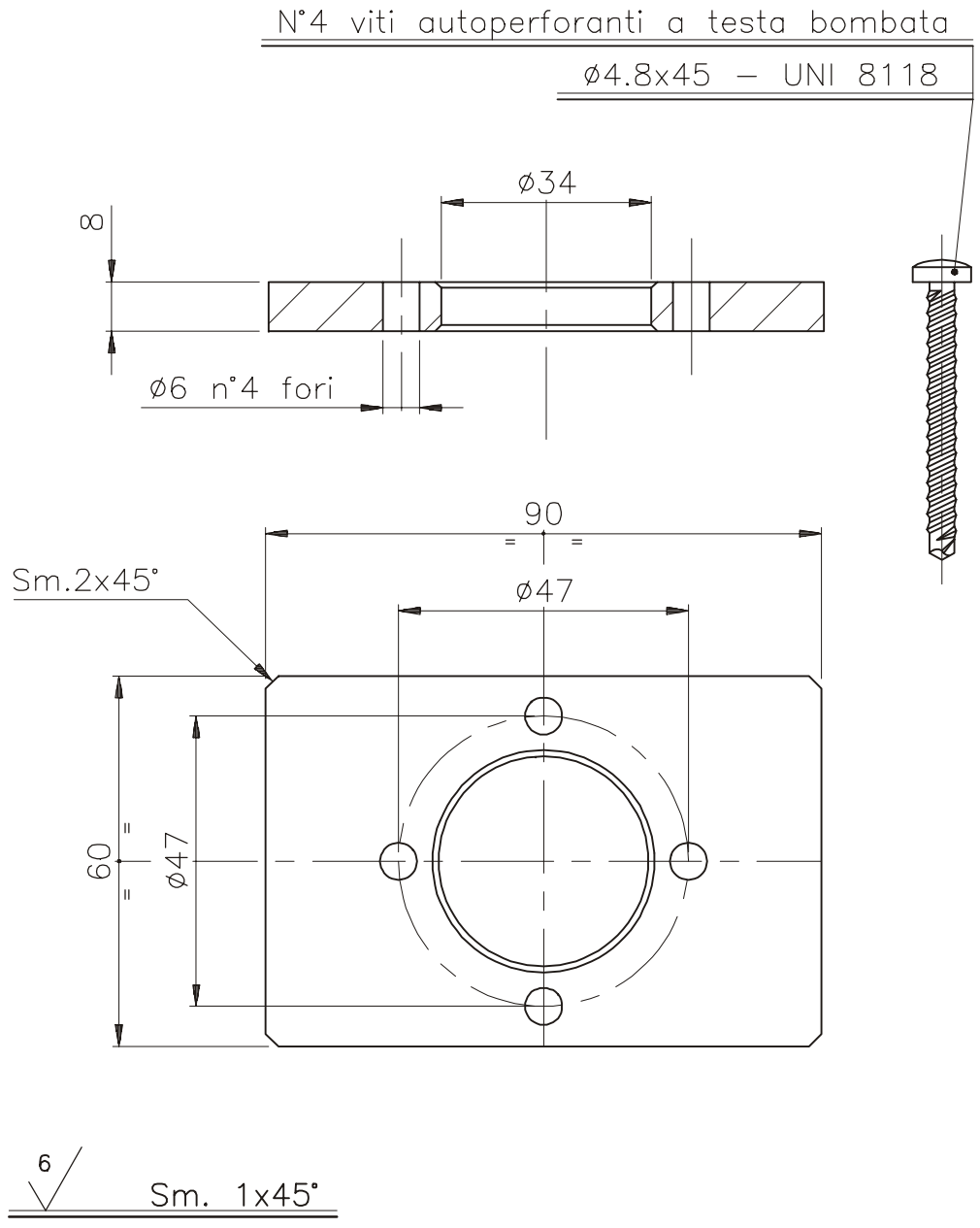

For the permissible errors on the dimensions without tolerance and for other general specifications, see IVECO *STD 10–2311*

MAT.	COVER.	DRAWN	N°DRAWING
Fe430B	Fosfat.	UTS (B)	SP. 2325

All proprietary rights reserved by IVECO
This drawing shall not be reproduced or in any way utilised, for the manufacture or the component or unit herein illustrated and must not be released to other parties, without written consent.
Any infringement will be legally pursued.

ISO ≤ IT8
≠ ≤ 30'
Ra ≤ 0.4

C/ I.S. 18-0011

Attrezzo per estrazione guarnizione albero distribuzione

MOTORE F1A

APPROVED	EXPER. 2325	SIZE A4
DATE 01/02/2002	SHEET	
SUPERSEDES		
SCALE 1:1	IVECO	
Q.TY 1		

02

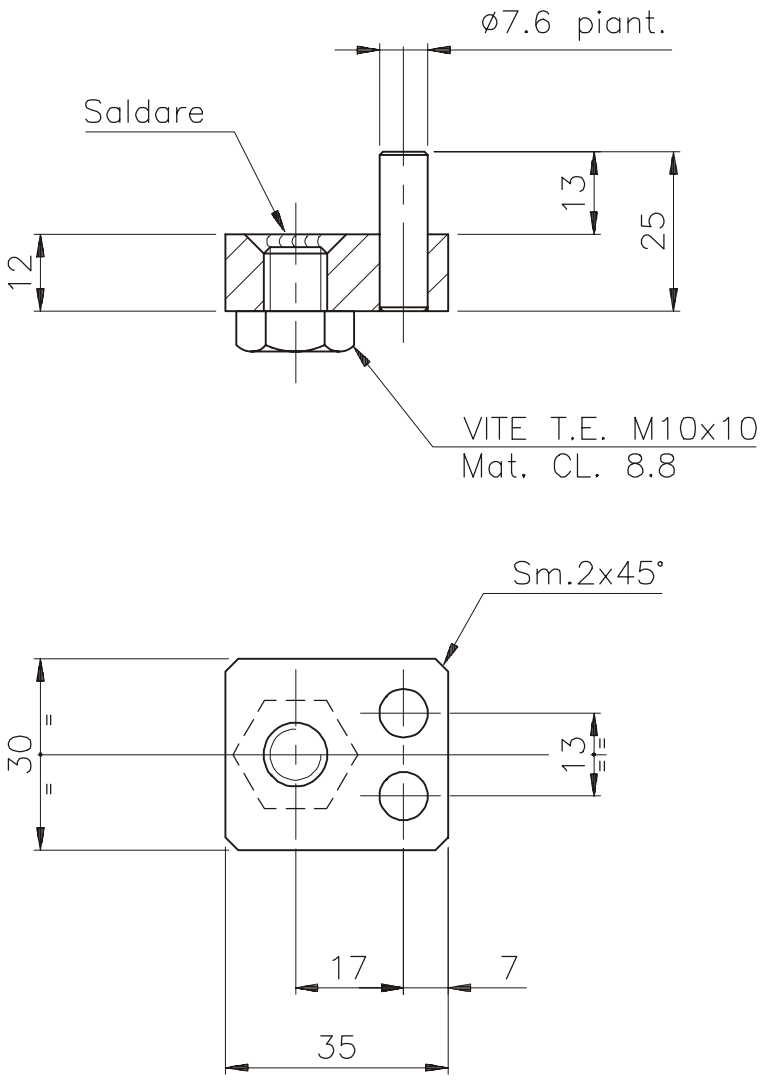

6 Sm. 0.5x45°

For the permissible errors on the dimensions without tolerance and for other general specifications, see IVECO *STD 10-2311*

Modification:

MAT.	COVER.	DRAWN	N°DRAWING
C40 Bon.	Fosfat.	UTS (B)	SP.2341

All proprietary rights reserved by IVECO. This drawing shall not be reproduced or in any way utilised, for the manufacture or the component or unit herein illustrated and must not be released to other parties, without written consent. Any infringement will be legally pursued.

ISO ≤ ITB
4 ≤ 30'
Ra ≤ 0.4

C/
I.S. 18-0011

Chiave per tensionamento tenditore cinghia compressore condizionatore	APPROVED	EXPER. 2341 / SIZE A4
	DATE 05/03/2002	SHEET
	SUPERSEDES	
	SCALE 1:1	IVECO
MOTORE F1A	Q.TY 1	

02

TIGHTENING TORQUE

PART	TORQUE	
	Nm	kgm
Cylinder head central fixing screw		
first phase: pre-tightening	100	9.8
second phase: angle	90°	
third phase: angle	90°	
Cylinder head side fixing screw		
first phase: pre-tightening	50	4.9
second phase: angle	60°	
third phase: angle	60°	
Hex screw with flange M8x1.25 L 40 fixing overhead	25	2.5
Hex screw with flange M8x1.25 L 77 fixing overhead	25	2.5
Central base fastening screw		
first phase: pre-tightening	50 ± 5	5 ± 0.5
second phase: angle	60° ± 2.5°	
third phase: angle	60° ± 2.5°	
Outer base fastening screw	36 ÷ 30	3.6 ÷ 3
Connecting rod cap fixing screw		
first phase: pre-tightening	40	4
second phase: angle	60°	
Hex screw with flange M12x1.25 L 43 fixing engine flywheel		
first phase: pre-tightening	30	3
second phase: angle	90°	
Cylindrical socket head screw fixing phonic wheel to crankshaft •	15	1.5
Nozzle union	25	2.5
Tapered threaded socket plug R 3/8" x 10 oil circuit	22	2.2
Water drain plug M14x1.50 L 10	25	2.5
Union on crankcase for oil return from turbocharger R 3/8"	50	5
Screw M6x1 fixing suction strainer	10	1
Male threaded socket plug M28x1.5 L11 fixing	100	9.8
Hex screw with flange M8x1.5 L 35 fixing frame retaining oil sump	25	2.5
Hex screw with flange M6x1 L30 fixing frame retaining oil sump	10	1
Hex screw with flange M6x1 L25 fixing frame retaining oil sump	10	1
Tapered threaded socket plug M6x1x8.5*	2	0.2
Male threaded plug with O-ring M22x1.5 L16	50 ±10	5 ±1
Hex screw with flange M6x1 L20 fixing oil vacuum pump assembly	10	1
Hex screw with flange M6x1 L50 fixing oil vacuum pump assembly	10	1
Oil filter cartridge M22x1.5 L7	25	2.5
Union fixing heat exchanger M22x1.5	80 ± 5	7.8 ± 0.5
Hex screw with flange M12x1.25 L55 fixing toothed pulley controlling timing system	90	8.8
Hex screw with flange M18x1.5 L78 fixing pulley on crankshaft	300	30
Hex screw with flange M8x1.25 L45 fixing pulley on damper	30	3
Hex screw with flange M8x1.25 L60 fixing automatic tightener	36	3.6
High pressure pump gear fastening hex nut with flange M14x1.5	70	6.9
Fastener for complete guide pulley roller for timing belt M8x1.25 L45	25	2.5

• Thread pre-treated with Loctite.
* Apply Loctite on the thread.

PART	TORQUE	
	Nm	kgm
Tapered threaded socket plug R 3/8" x 10	17	1.7
Tapered threaded socket plug R 1/8" x 8	7	0.7
Tapered threaded socket plug R 1/4" x 9	9	0.9
Hex screw with flange M12x1.25 L65 fixing gear for camshaft chain	115	11.3
Hex screw with flange M6x1 L25 fixing chain cover	10	1
Hex screw with flange M6x1 L35 automatic tightener	10	1
Threaded plug M14x1.5 L10	25	2.5
Ball joint fastening screw M6x1x9	10	1
Hex screw with split washer and flat washer fixing water pump M8x1.25 L28	25	2.5
Hex screw with split washer and flat washer fixing water pump M6x1 L20	10	1
Flanged screw M8x1.25 fixing water outlet union	25	2.5
Flanged screw M8x1.25 fixing piezometric tube on intake manifold	25	2.5
Flanged nut M8x1.25 fixing piezometric tube on bracket	18	1.8
Self-tapping screw L16 fixing bracket on coalescence filter cover	5	0.5
Flanged screw M6x1x16 fixing piezometric tube	10	1
Self-tapping flanged screw L14 fixing piezometric tube on front cover	2	0.2
Coupling M10x1x10 fixing vapour outlet	12	1.2
Union M10x1x19 fixing vapour outlet	14 ÷ 16	1.4 ÷ 1.6
Hex screw with flange M8x1.25 L25 fixing thermostat	25	2.5
Hex screw with flange M8x1.25 L100 fixing air-conditioner compressor	25	2.5
Hex screw with flange M8x1.25 L120 fixing air-conditioner compressor	25	2.5
Hex screw with flange M8x1.25 L50 fixing air-conditioner compressor mounting	25	2.5
Cylindrical socket head screw M8x1.25x40 fixing air-conditioner compressor drive belt guide pulley	25	2.5
Hex screw fixing bottom of alternator M10x1.25 L40 and M10x1.5 L50	50	5
Hex nut with flange fixing top of alternator M10x1.25 L10	-	-
Fastener for complete guide pulley roller for timing belt M10x1.25 L50	40	4
Allen head screw fixing automatic tightener M8x1.25 L65	25	2.5
Hex screw with flange M8x1.25 L45 fixing pulley on damper	30	3
Screw plug with washer M12x1.5 L20	30	3
Vacuum pump coupling M10x1 on oil vacuum pump assembly	10	1
Flanged screw M6x1x27 fixing timing cover	7.5	0.7
Hex screw with flange M6x1 L27 fixing coalescence filter assembly	7.5	0.7
Screw M6x1 L12 fixing sump blow-by oil drain pipes	10	1
Union M20x1.5 blow-by breather socket	30	3
Hex screw with flange M8x1.25 L90 fixing intake manifold	30	3
Flanged nut M8x1.25 fixing exhaust manifold	25	2.5
Flanged screw M6x1 fixing oil fillpipe	10	1
Flanged screw M8x1.25 fixing oil dipstick pipe	18	1.8
Glow plug M8x1 L11.5	8 ÷ 11	0.8 ÷ 1.1
High-pressure injection system		
Hex screw fixing hydraulic accumulator M8x1.25 L50	28	2.8
Screw M8x1.25 L30 fixing high-pressure pump	25	2.5
Screw M8x1.25 fixing bracket anchoring fuel delivery pipe	25	2.5
Fitting for fuel pipe M14x1.50 L12	22	2.2
Fitting for fuel pipe M12x1.50 L12	22	2.2
Hex screw fixing electro-injector retaining bracket	28	2.8
Hex screw with flange fixing low-pressure fuel pipes M6x1 L30	10	1

PART	TORQUE	
	Nm	kgm
Union M12x1.5 L23 - L24 and M12x1.5 L12 for fixing fuel pipes	25	2.5
Fitting for fastening multiple filler to high pressure pump M12x1.5 L24	25	2.5
Flanged screw M12x1.5 fixing water temperature sensor	30	3
Flanged screw M6x1 fixing air temperature sensor	10	1
Flanged screw M6x1 fixing engine speed sensor	10	1
Socket-head screw M6x1 fixing timing sensor	10	1
Screw M8x1.25 fixing air duct bracket	25	2.5
Screw M8x1.25 fixing air duct	25	2.5
Cylindrical socket-head screw M6x1 for V-clamp	8	0.8
Nut M8x1.25 fixing turbocharger	25	2.5
Flanged screw M8x1.25 fixing turbocharger outlet pipe	25	2.5
Fitting M14x1.5 or M12x1.5 for pipe delivering oil to turbocharger	35	3.5
Fitting M22x1.5 for oil return pipe from turbocharger	45	4.5
Flanged screw fixing oil return pipe from turbocharger	10	1
Hex screw with flange M8x1.25 L40 fixing power steering pump	25	2.5
Hex screw with flange M12x1.25 L155 fixing electromagnetic coupling mounting	90	8.8
Hex screw with flange M8x1.25 L20 fixing manoeuvring hooks	25	2.5
Flanged screws M10x1.25 fixing engine mounts	50	5
Oil level sensor M12x1.25	25	2.5
Thermometric switch/transmitter M16x1.5	25	2.5
Oil pressure switch M14x1.5	40	4
Cylindrical socket-head screw M8x1.25 fixing E.G.R. valve	25	2.5
Flanged screw M8x1.25 fixing E.G.R. heat exchanger	25	2.5
Flanged nut M8x1.25 fixing elbow	25	2.5
Compensator fastening nut M8x1.25	25	2.5
Oil pressure regulation valve cap	100	10

Figure 22

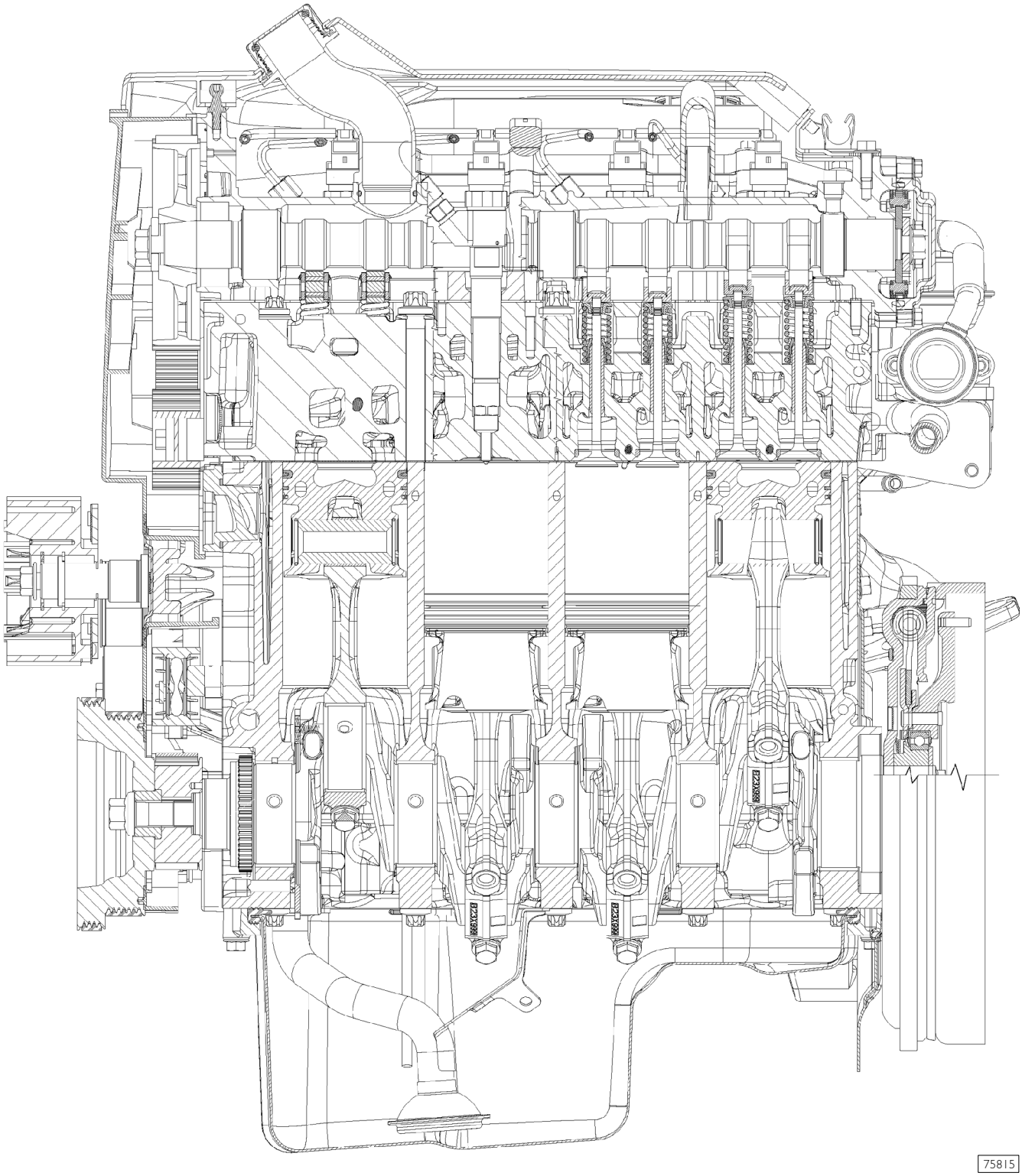

LONGITUDINAL CROSS-SECTION OF ENGINE WITH E.G.R.

Figure 23

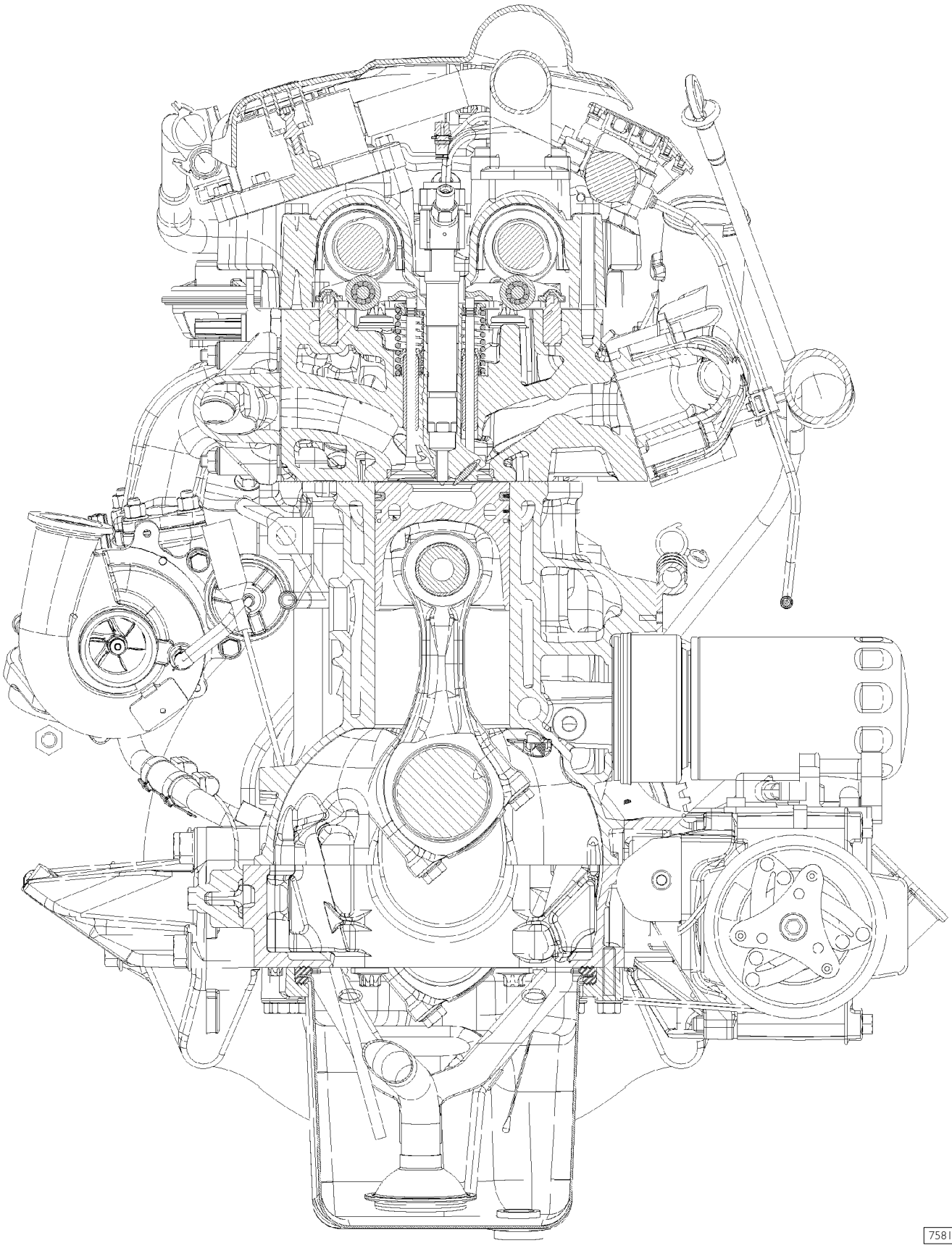

TRANSVERSE CROSS-SECTION OF ENGINE WITH E.G.R.

OVERHAULING ENGINE F1A

540110 DISASSEMBLING THE ENGINE AT THE BENCH

Figure 24

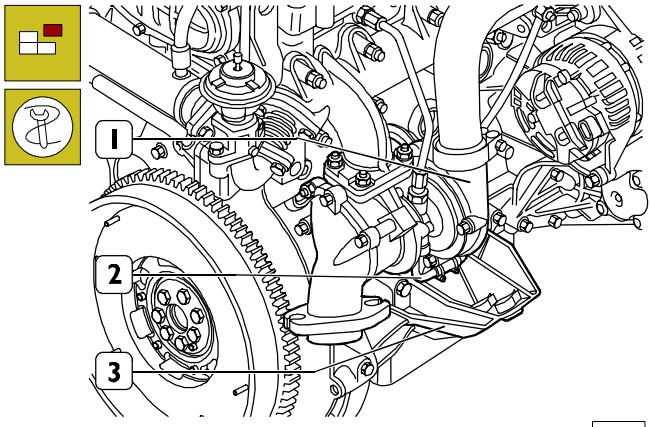

If the following parts have not already been removed, do so now:

- top soundproofing cover;
- rail guard;
- engine cable, disconnecting its electrical connections from: thermostat temperature sensor, timing sensor, engine speed sensor, pressure regulator, rail pressure sensor, intake manifold air temperature/pressure sensor.

To be able to fit the brackets 99361038 onto the crankcase to secure the engine to the stand for overhauling, it is necessary to remove the left and right engine mounts (3) and disconnect the oil pipe (2) from the turbocharger (1) and from the crankcase.

Block the turbocharger air/exhaust gas inlets and outlets to prevent foreign bodies getting inside.

Figure 25

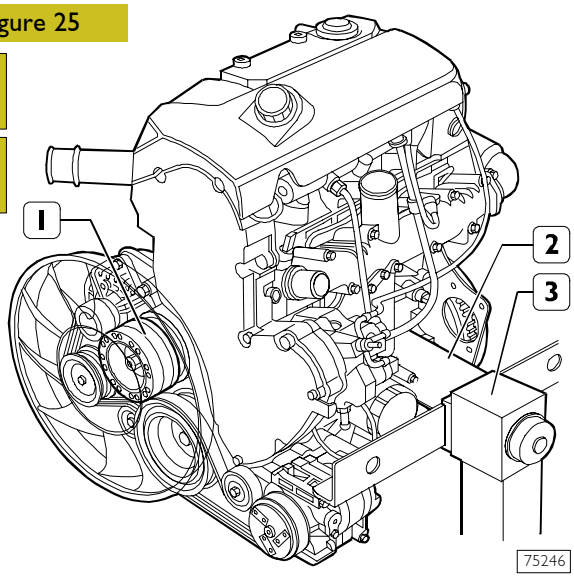

Fit the brackets 99361038 (2) to the crankcase and use these to secure the engine to the rotary stand 99322205 (3). Drain the oil from the engine by removing the plug from the oil sump.
Disconnect the fan from the electromagnetic coupling (1).

Figure 26

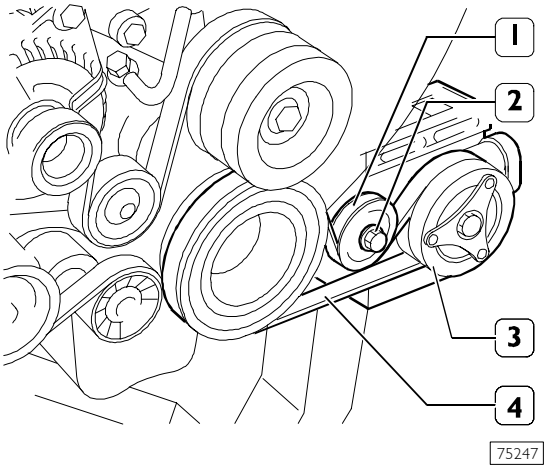

Take out the screw (2) and remove the tightener (1).
Take off the belt (4) driving the air-conditioner compressor (3).

Figure 27

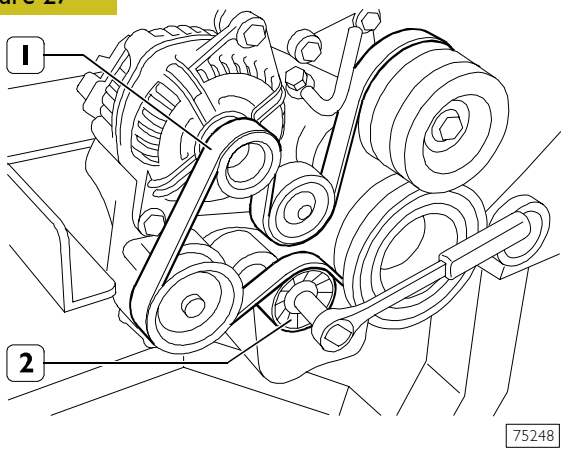

Using the specific wrench on the automatic tightener (1), slacken the tension of the belt (2) and remove it.

Figure 28

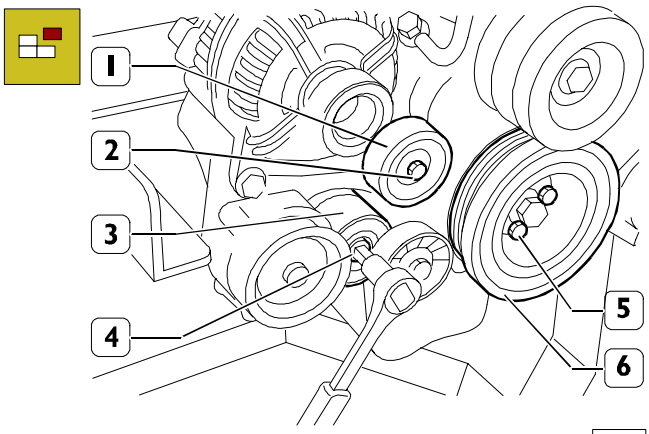

Take out the screw (4) and remove the automatic tightener (3). Take out the screw (2) and remove the fixed tightener (1). Take out the screws (5) and remove the pulley (6).

Figure 29

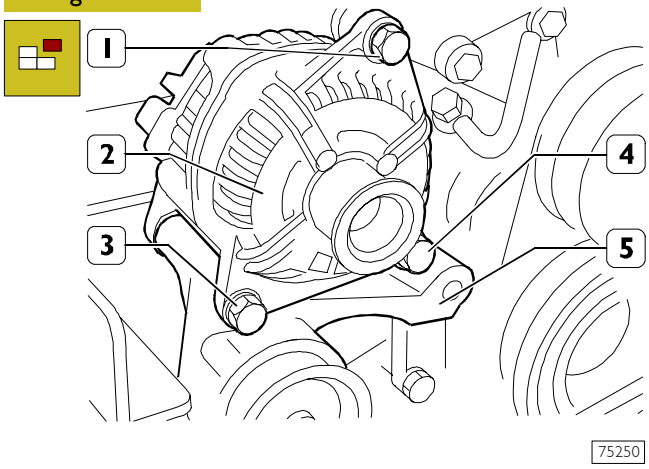

Take out the bolt (1), the bottom screws (3 and 4) and remove the alternator (2) from the mounting (5).

Figure 30

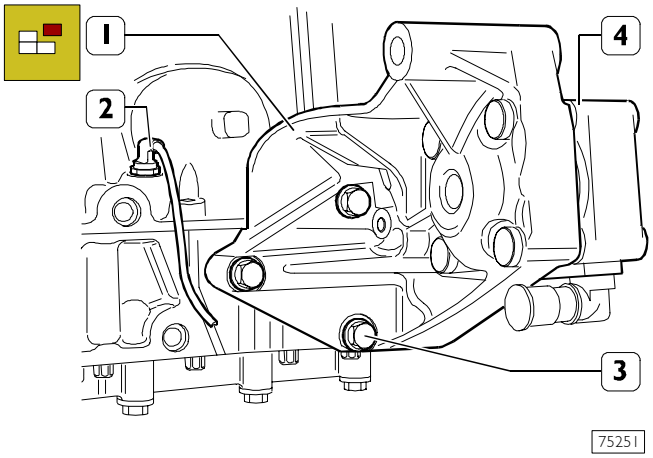

Take out the screw (3) and remove the mounting (1) of the power steering pump (4). Using a suitable wrench, remove the oil level sensor (2).

Figure 31

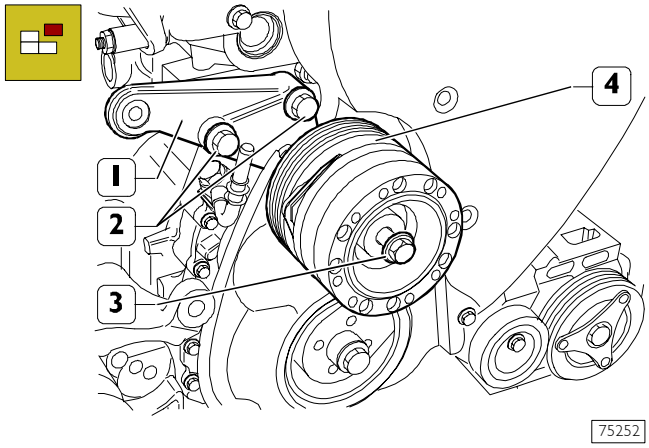

Take out the screws (2) and (3) and remove the mounting (1) together with the electromagnetic coupling (4).

Figure 32

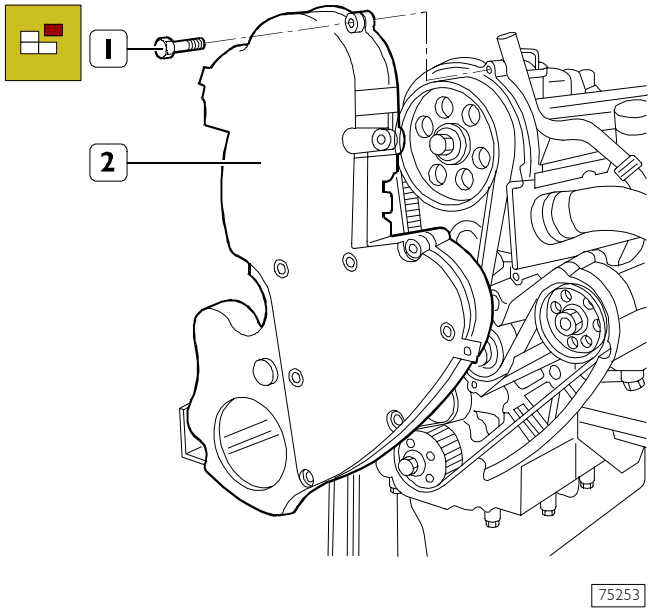

Take out the screws (1) and remove the timing cover (2).

Figure 33

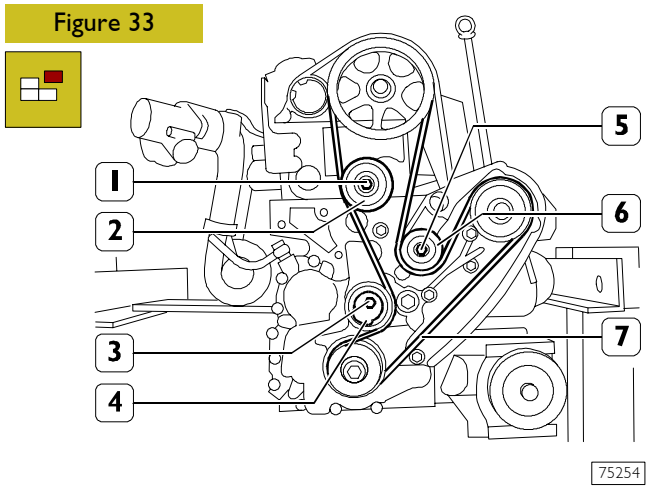

Take out the screw (3) and remove the tightener (4). Take out the screws (1) and (5) and remove the gears (2) and (6). Remove the toothed belt (7).

Figure 34

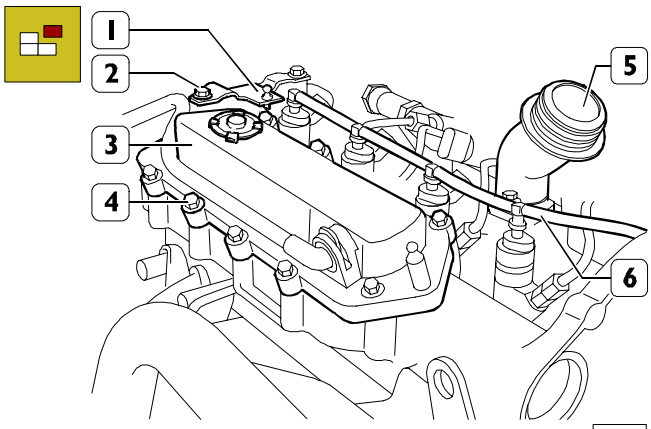

Take out the screws (2) and remove the bracket (1). Take out the screws (4) and remove the coalescence filter (3). Take off the nuts (6) and remove the oil fillpipe (5).

Figure 35

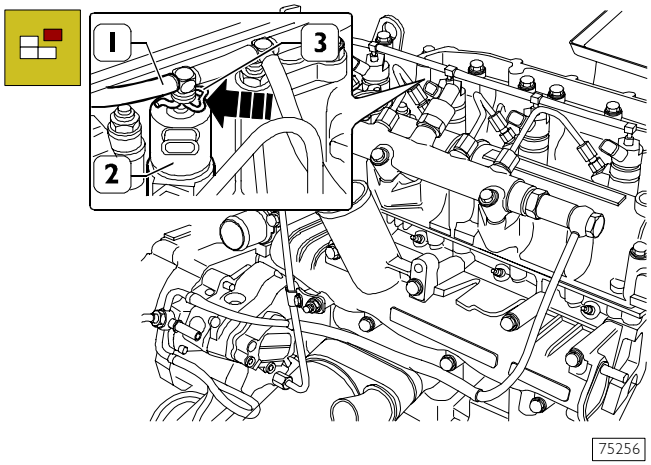

Press the springs (3) in the direction shown by the arrow and disconnect the fittings of the pipe (1) recovering fuel from the electro-injectors (2).

Figure 36

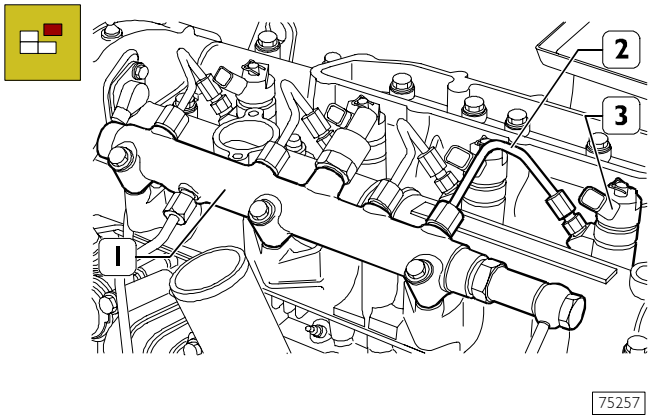

Disconnect the fuel pipes (2) from the electro-injectors (3) and from the hydraulic accumulator (1) (rail).

Figure 37

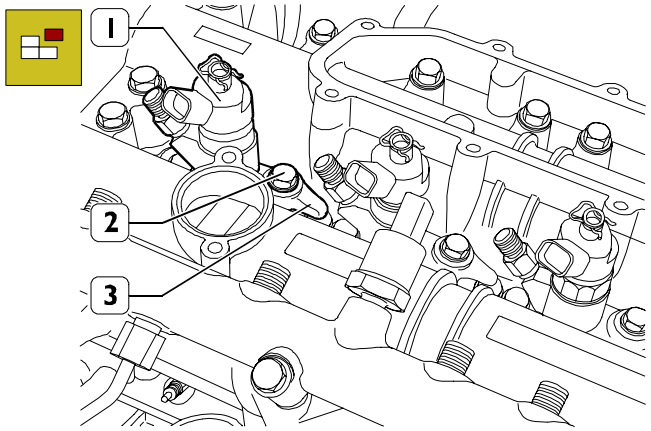

Take out the screws (2) and the brackets (3) fixing the electro-injectors (1) to the cylinder overhead.

Figure 38

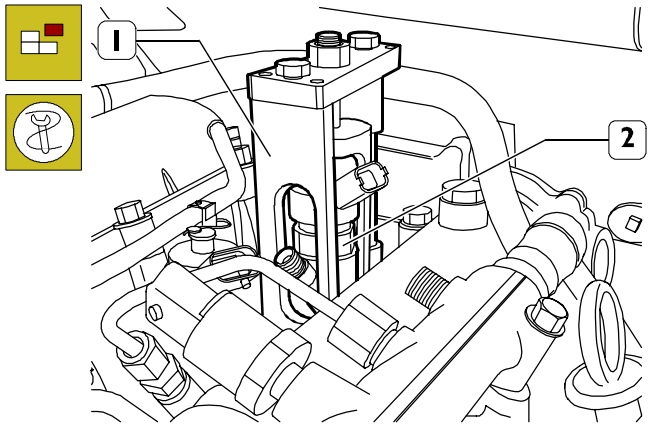

Using tool 99342153 (1) extract the electro-injectors (2) from the overhead.

Figure 39

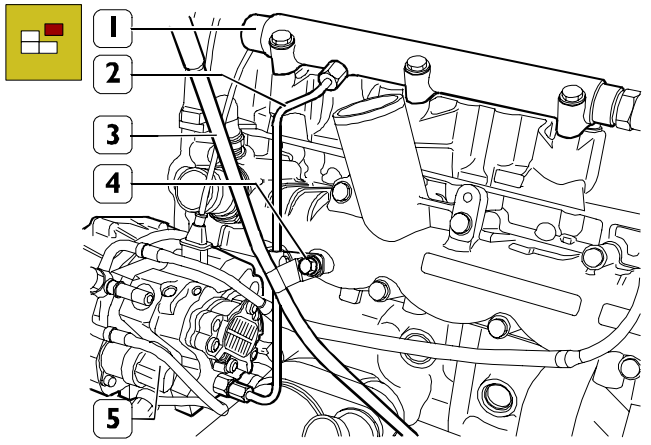

Take out the screw (4) and extract the oil dipstick pipe (3) from the crankcase. Disconnect the pipe (2) from the hydraulic accumulator (1) and from the high-pressure pump (5).

Figure 40

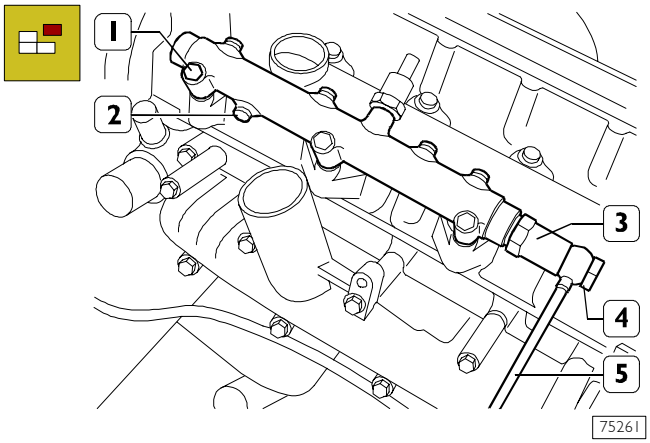

Remove the coupling (4) and disconnect the fuel recovery pipe (5) from the pressure relief valve (3).
Take out the screws (1) and remove the hydraulic accumulator (2).

Figure 41

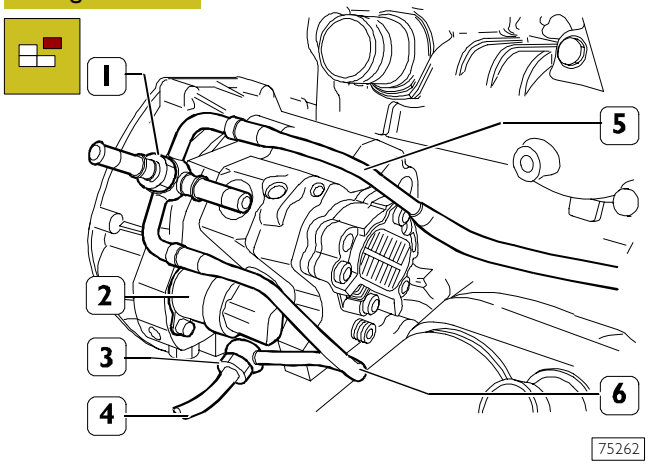

Disconnect the fuel recovery pipes (4), (5) and (6) from the high-pressure pump (2), removing the couplings (1) and (3).

Figure 42

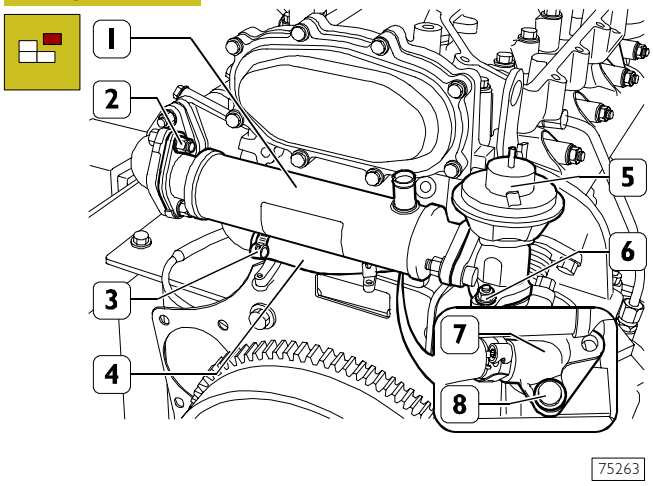

For engines with E.G.R. only

Loosen the clamp (3) and disconnect the pipe (4) from the heat exchanger (1).
Take off the nuts (2) and (6) and remove the heat exchanger (1) together with the E.G.R. valve (5).
Take out the screws (8) and remove the flange (7).

Figure 43

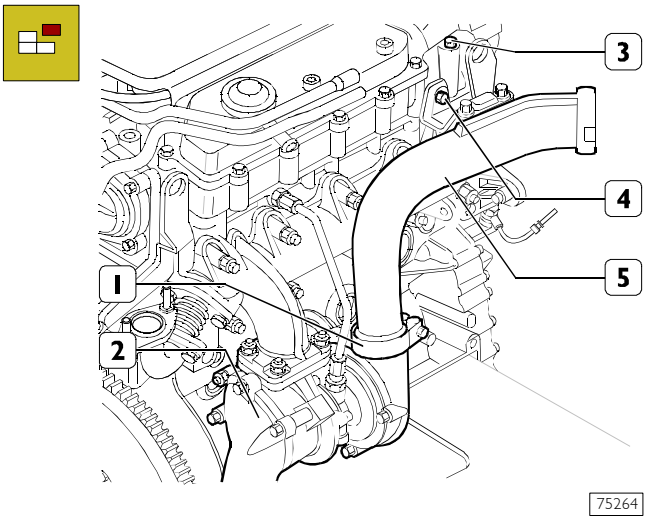

Take out the screw (4), loosen the clamp (1) and disconnect the air duct (5) from the turbocharger (2) and from the overhead (3).

Figure 44

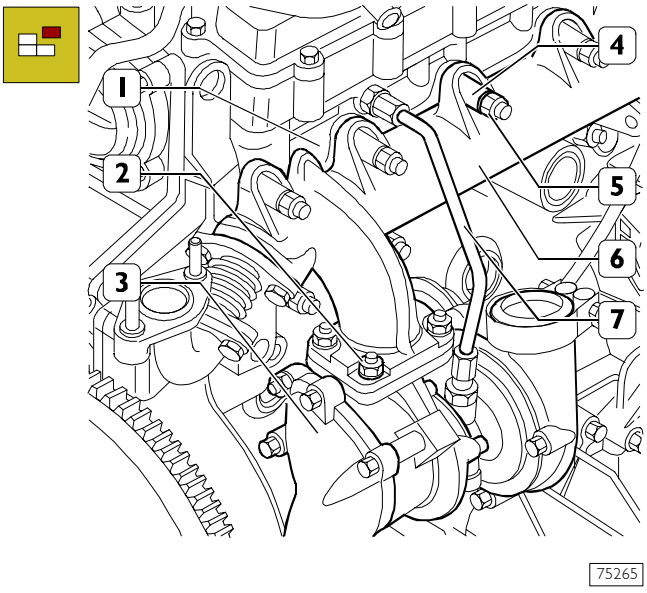

Disconnect the oil pipe (7) from the coupling of the cylinder head (1) and from the coupling of the turbocharger (3).
Take off the nuts (2) and remove the turbocharger (3) with the associated gasket from the exhaust manifold (6).
Take off the nuts (5) and the spacers (4), remove the exhaust manifold (6) with the associated gasket from the cylinder head (1).

Figure 45

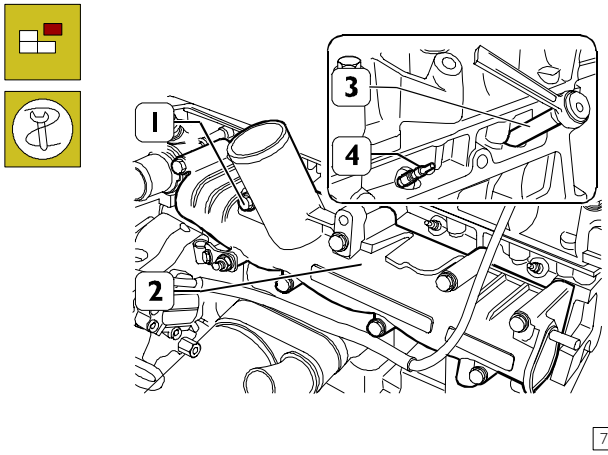

75266

Take out (1) and remove the intake manifold (2) with the associated gasket.
Using wrench SP.2275 (3), remove the glow plugs (4).

Figure 46

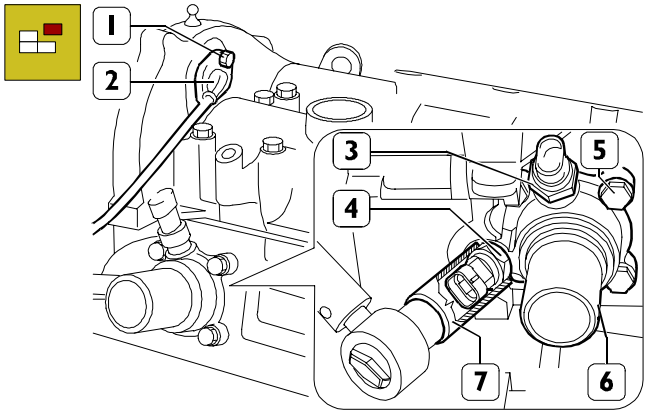

75267

Take off the nut (1) and remove the timing sensor (2). Using wrench SP.2262 (7), remove the temperature sensors (3) and (4). Take out the screws (5) and remove the thermostat box (6).

Figure 47

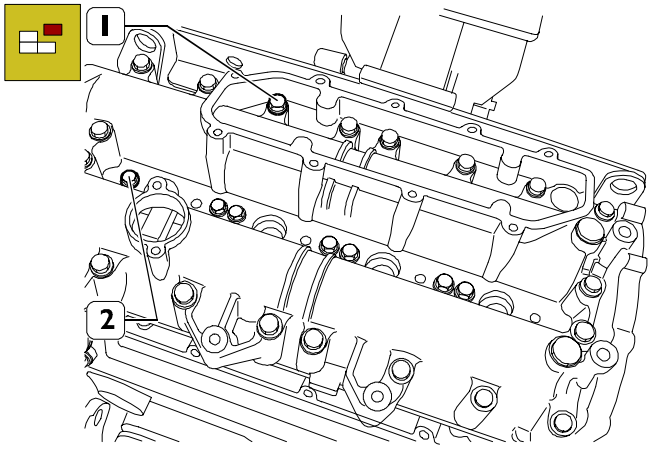

75268

Take out the screws (1) and remove the overhead (2).

Figure 48

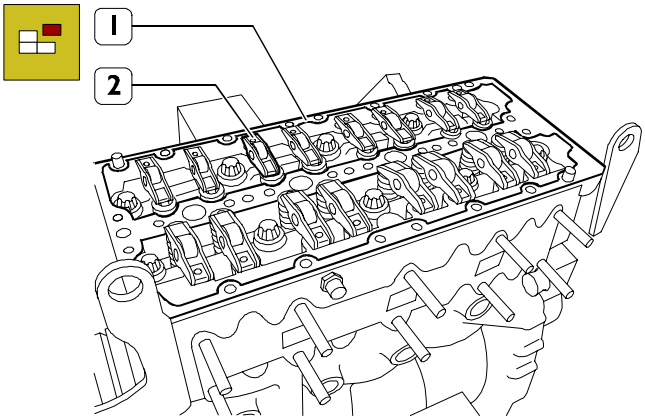

75269

Take off the gasket (1) and remove the hydraulic tappets together with the rocker arms (2).

Figure 49

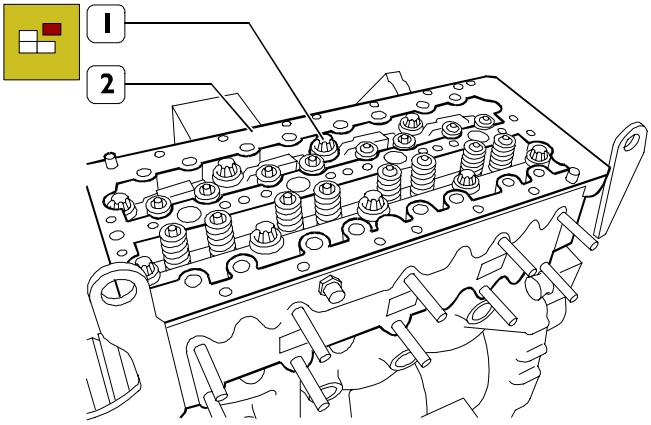

75270

Take out the screws (1) and remove the cylinder head (2).

Check the protrusion of the pistons as described under the relevant heading to check the possibility of facing the crankcase if it has deformed.

Figure 50

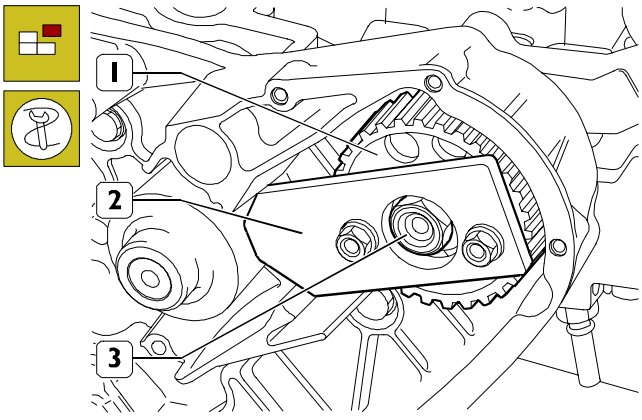

75271

Block rotation of the high-pressure pump gear (1) by applying tool SP 2263 (2) as shown in the figure. Take off the nut (3) and remove the tool (2).

Figure 51

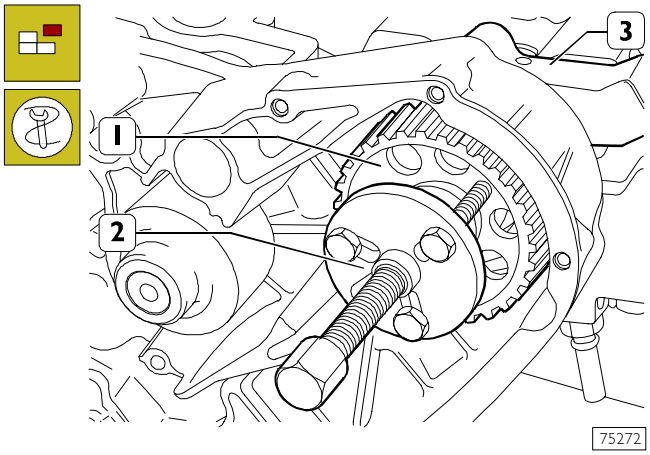

Using tool 99340035 (2), applied as in the figure, extract the gear (1) from the shaft of the high-pressure pump (3).

Figure 52

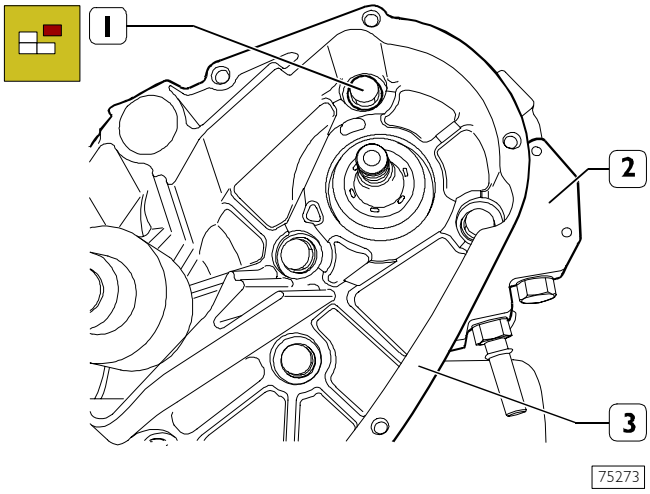

Take out the screws (1) and remove the high-pressure pump (2) from the water pump mounting (3).

Figure 53

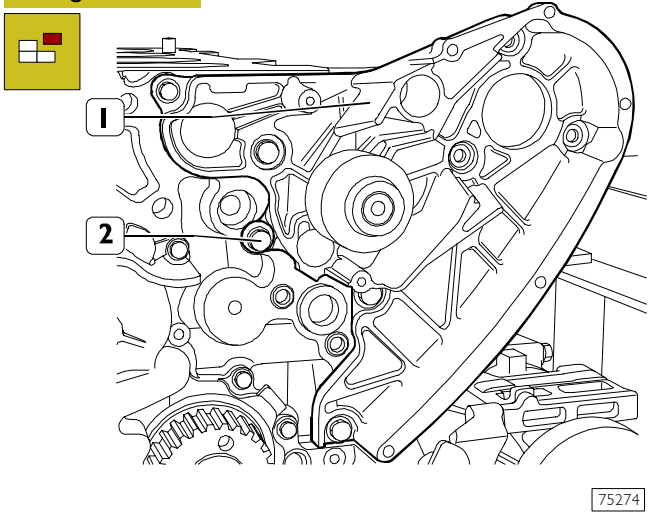

Take out the screws (2) and remove the water pump assembly (2).

Figure 54

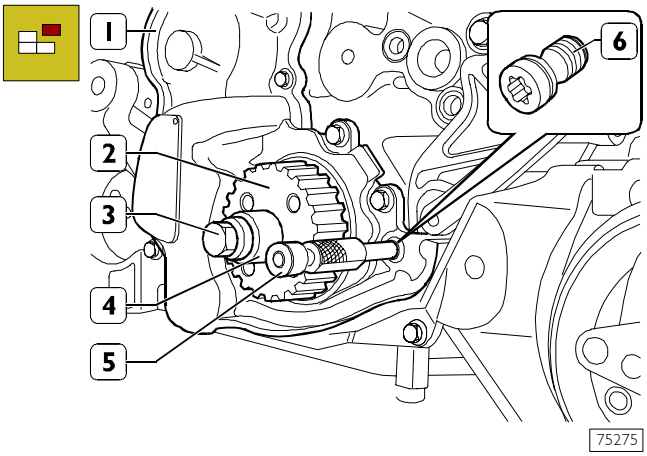

Remove the plug (6) from the oil pump – vacuum pump assembly (1).
Position the crankshaft so as to be able to insert tool 99360615 (5) into its hole through the hole in the plug (6) and block rotation of the crankshaft.
Take out the screw (3) with the spacer (4) beneath and remove the gear (2).

Figure 55

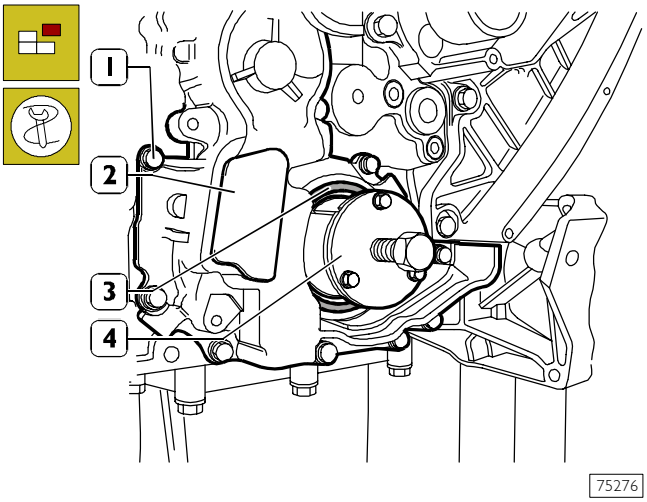

Apply tool 99340057 (4) to the front O-ring (3) of the crankshaft and remove it from the oil pump – vacuum pump assembly (2).
Take out the screws (1) and remove the oil pump – vacuum pump assembly (2).

Figure 56

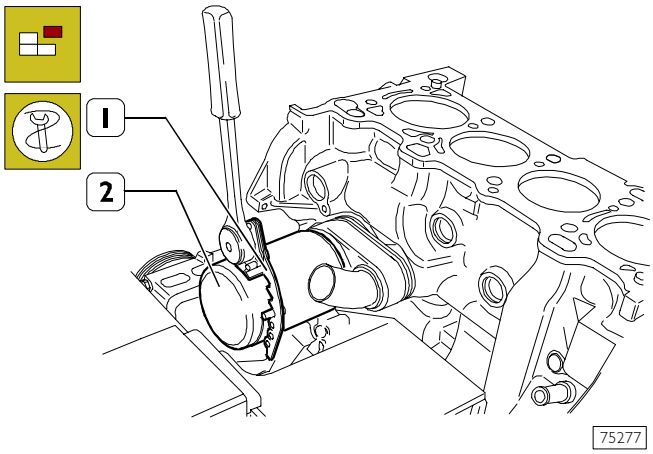

Using tool 99360076 (1), remove the oil filter (2).

Figure 57

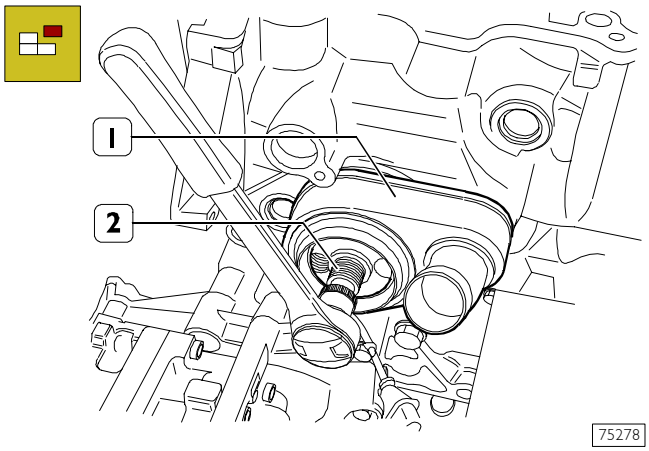

Take out the coupling (2) and remove the heat exchanger (1).

Figure 58

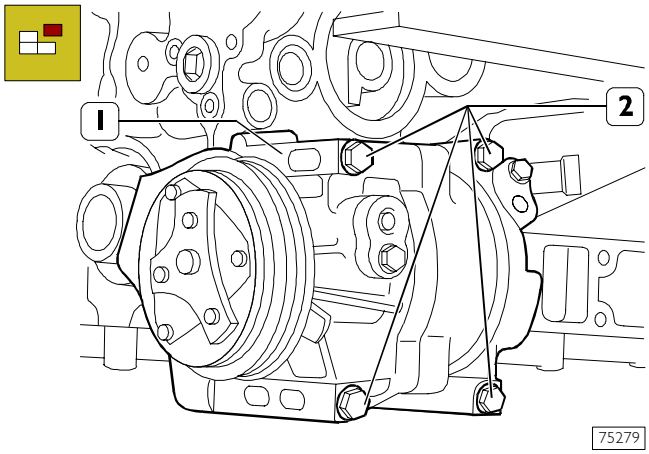

Take out the screws (2) and remove the air-conditioner compressor (1) (if applicable).

Figure 59

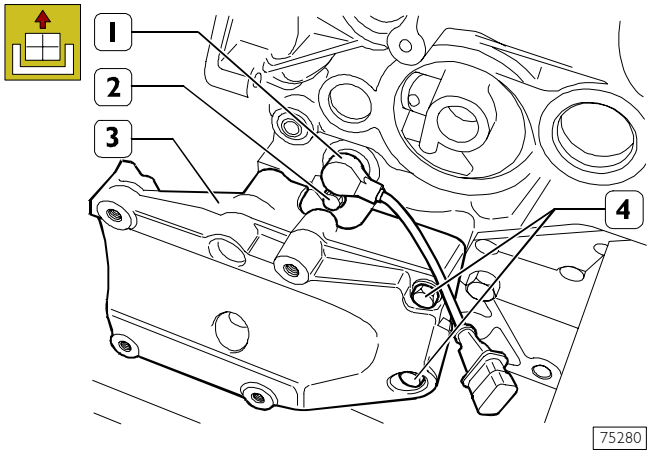

Take out the screw (2) and remove the speed sensor (1). Take out the screws (4) and remove the compressor mounting (3).

Figure 60

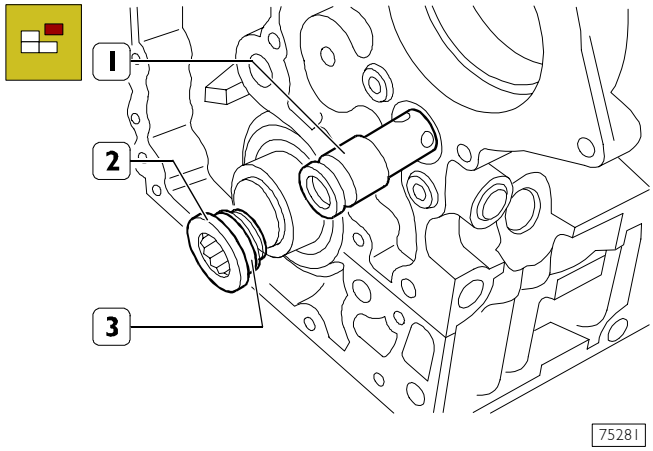

Take out the plug (2) with the seal (3) and extract the oil pressure control valve (1).

Figure 61

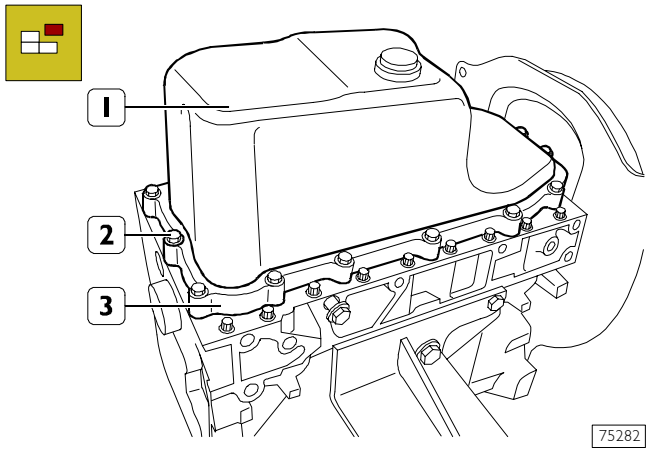

Undo the screws (2) and remove the oil sump (1) with the associated gasket and frame (3).

Figure 62

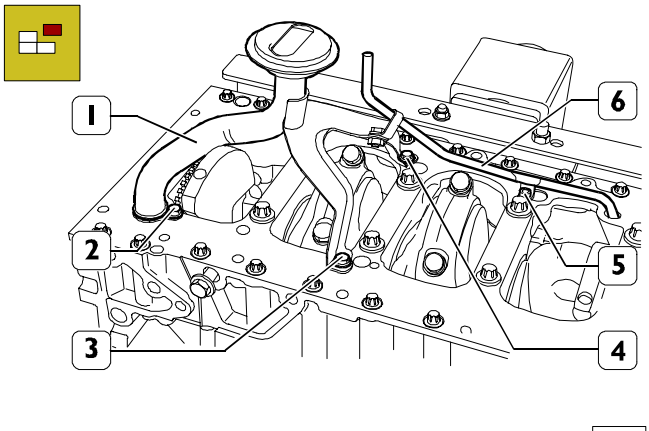

Take out the screws (2), (3), (4) and (5) and remove the suction strainer (1) together with the pipe (6).

Figure 63

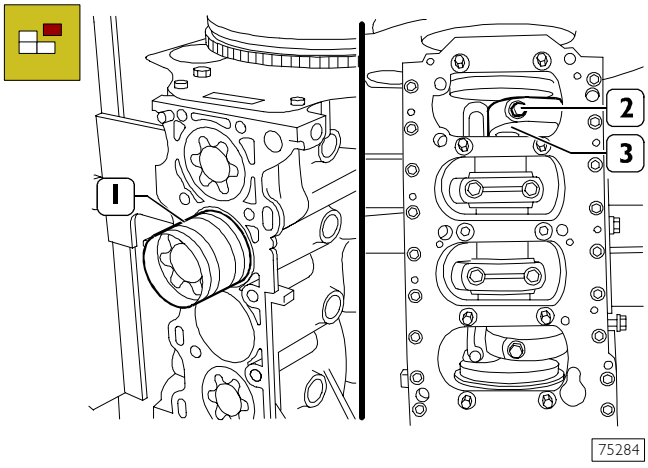

Take out the screws (2) and remove the connecting rod caps (3).
Extract the pistons (1) from the top of the crankcase.

On the same side of the connecting rod and its associated cap, indicate the number of the cylinder from which the connecting rod has been removed. Keep the bearing shells in their respective housings since, if they are used, they will need to be fitted in the position found during removal.

Figure 64

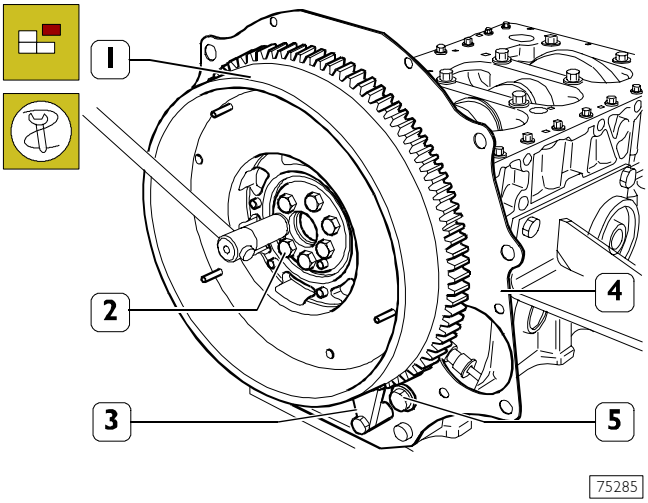

Block rotation of the flywheel (1) with tool 99360306 (3).
Take out the screws (2) and remove the engine flywheel (1).
Take out the screw (5) and remove the guard (4).

Figure 65

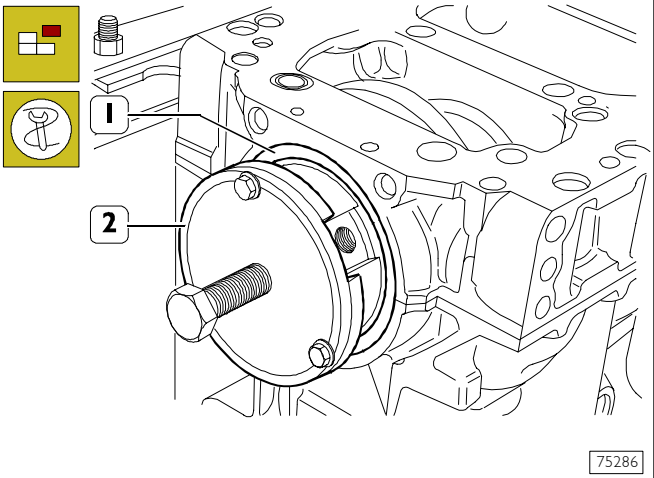

Apply tool 99340058 (2) to the rear O-ring (1) and extract it from the crankcase.

Figure 66

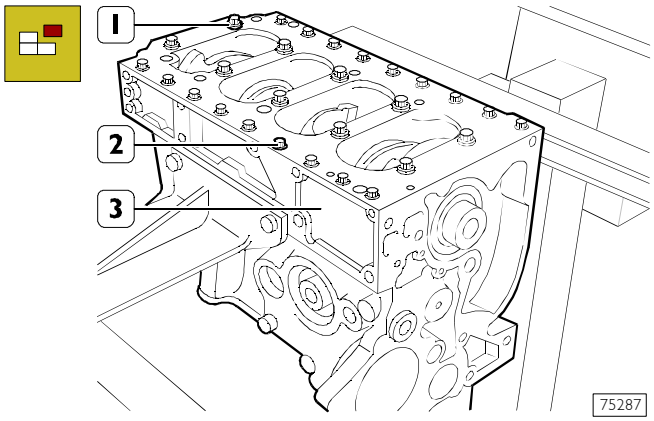

Using an appropriate wrench and a hex-fluted wrench, unscrew the screws (1) and (2) and remove the crankcase base (3).

Figure 67

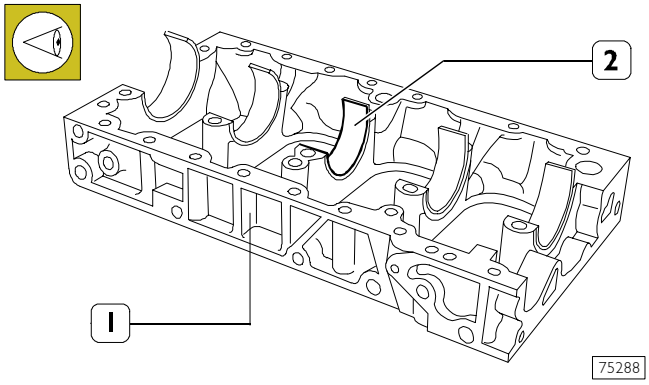

Note the assembly position of the top main bearing shells (2) since, if they are reused, they will need to be fitted in the position found during removal.

Figure 68

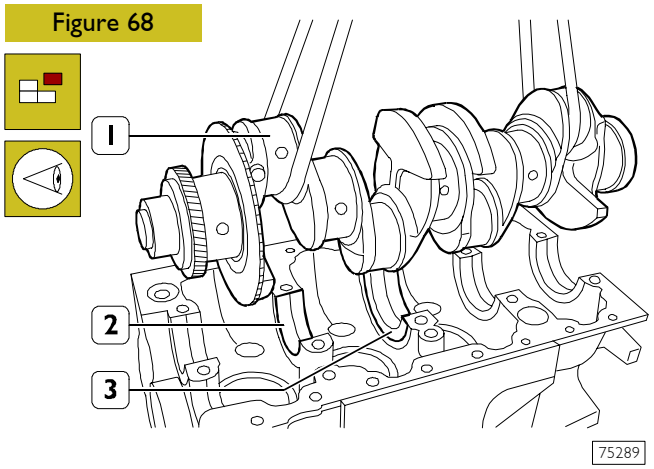

With the aid of a hoist and a rope, remove the crankshaft (1).

Note the assembly position of the top main bearing shells (2) since, if they are reused, they will need to be fitted in the position found during removal.

The central half ring (3) is fitted with thrust half-washers.

Figure 69

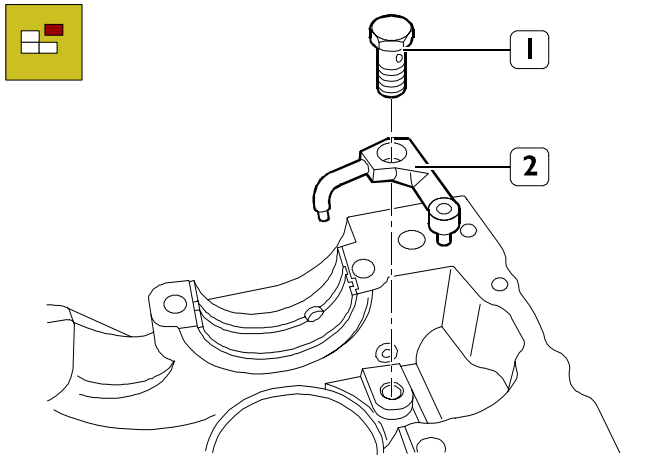

Take out the couplings (1) and remove the oil jets (2).

On completing engine removal, it is necessary to clean the removed parts thoroughly and check their integrity.
The following pages give the instructions for the main checks and measurements to make in order to determine whether the parts can be reused.

REPAIRS
CYLINDER BLOCK
Checks and measurements

Figure 70

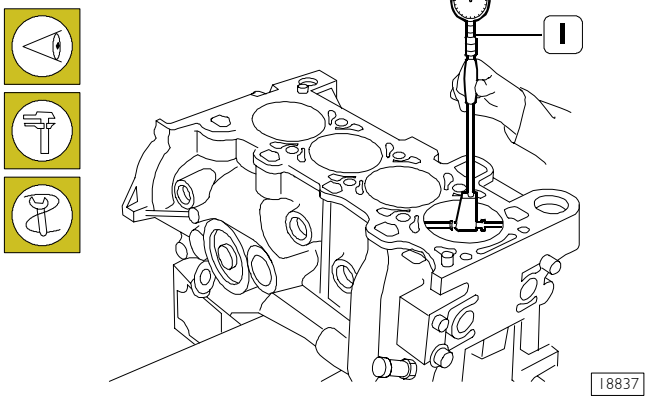

After removing the engine, thoroughly clean the cylinder-crankcase assembly. Use the rings 99365508 to carry the cylinder block.
Carefully check that the crankcase has no cracks in it.
Check the state of the plugs. If they are rusty or there is any doubt about their seal, replace them. Examine the surfaces of the cylinder liners; they must show no sign of meshing, scoring, ovalization, taper or excessive wear. The inside diameter of the cylinder liners is checked, to ascertain the extent of ovalization, taper and wear, using the bore meter 99395687 (1) fitted with a dial gauge previously reset on the ring gauge of the diameter of the cylinder liner or on a micrometer.

Figure 71

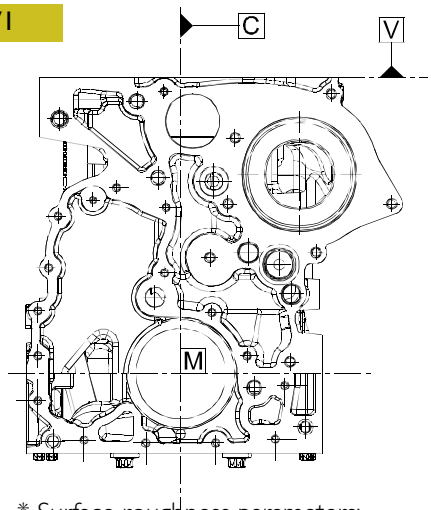

* Surface roughness parameters:

R1 = 4 ÷ 10 µm
Rz = 3 ÷ 8 µm
Ra = 0.3 ÷ 0.6 µm
W1 < 2 µm

Permissible surface porosity for machined cylinder (see Figure 73)

ZONE B1 = Area of greatest mechanical stress, segment/liner contact: No.2 non-continuous porosities are permissible max. 0.5x0.5. — C — 100%

ZONE B2 = Surface involved in segment rubbing: No.2 non-contiguous porosities are permissible max. 1x0.8. — C — 100%

Figure 72

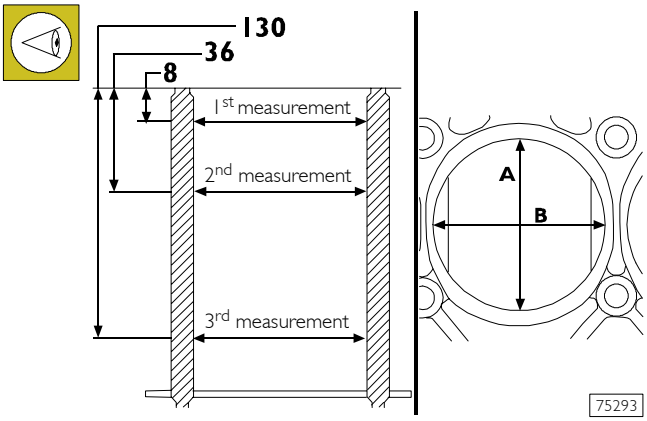

The measurements must be made for each single cylinder at three different heights up the liner and on two planes at right angles to each other: one parallel to the longitudinal axis of the engine (B) and the perpendicular (A); the greatest wear is generally found on this last plane with the first measurement.
On finding ovalization, taper or wear, go ahead and bore/grind and finish the face of the cylinder liners. The refacing of the cylinder liners should be done in relation to the diameter of the pistons supplied as spare parts oversized by 0.4 mm of the nominal value and to the prescribed assembly clearance.

Figure 73

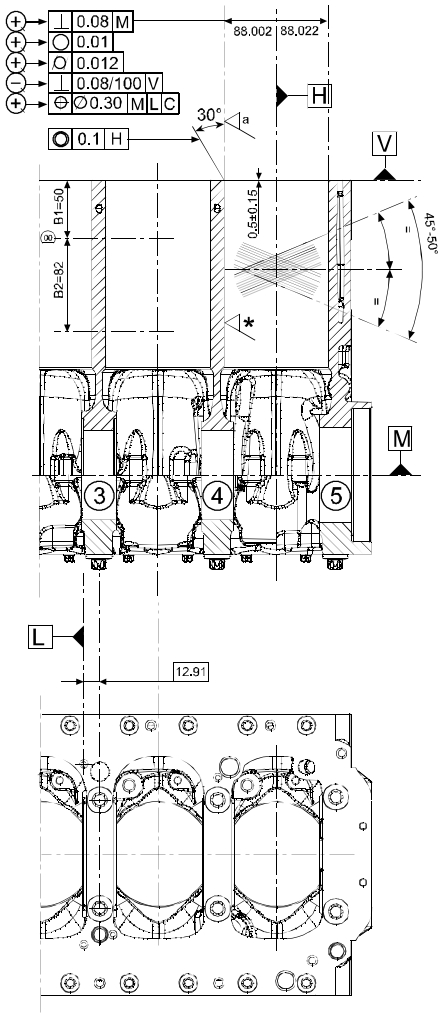

Checking head mating surface on cylinder block

Figure 74

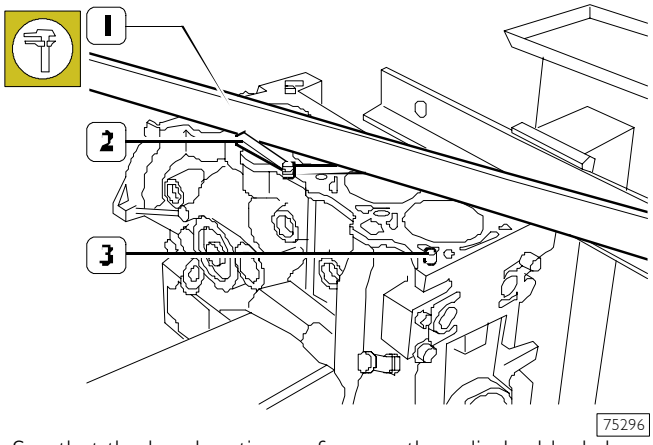

See that the head mating surface, on the cylinder block, has no deformation.
This check can be made, after taking out the grub screws (3), with a surface plate spread with carbon black or with a calibrated rule (1) and a feeler gauge (2). After ascertaining the areas of deformation, level the bearing surface with a grinding machine.

The crankcase can only be surfaced after making sure that, on completing the work, the piston protrudes from the cylinder liner by no more than the prescribed value.

5408 CRANKSHAFT
540810 Measuring main journals and crank pins

Figure 76

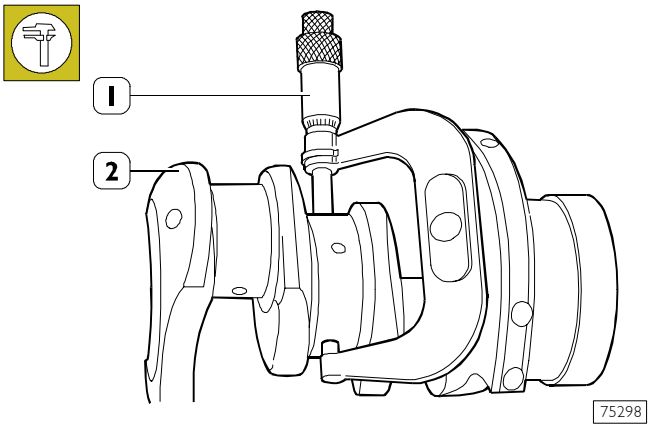

On finding signs of seizure, scoring or excessive ovalization on main journals and crankpins, it is necessary to regrind the pins. Before grinding the pins (2), measure the shaft pins with a micrometer (1) to establish to what diameter it is necessary to decrease the pins.

It is advisable to enter the measurements in a table. See Figure 75.

Figure 75

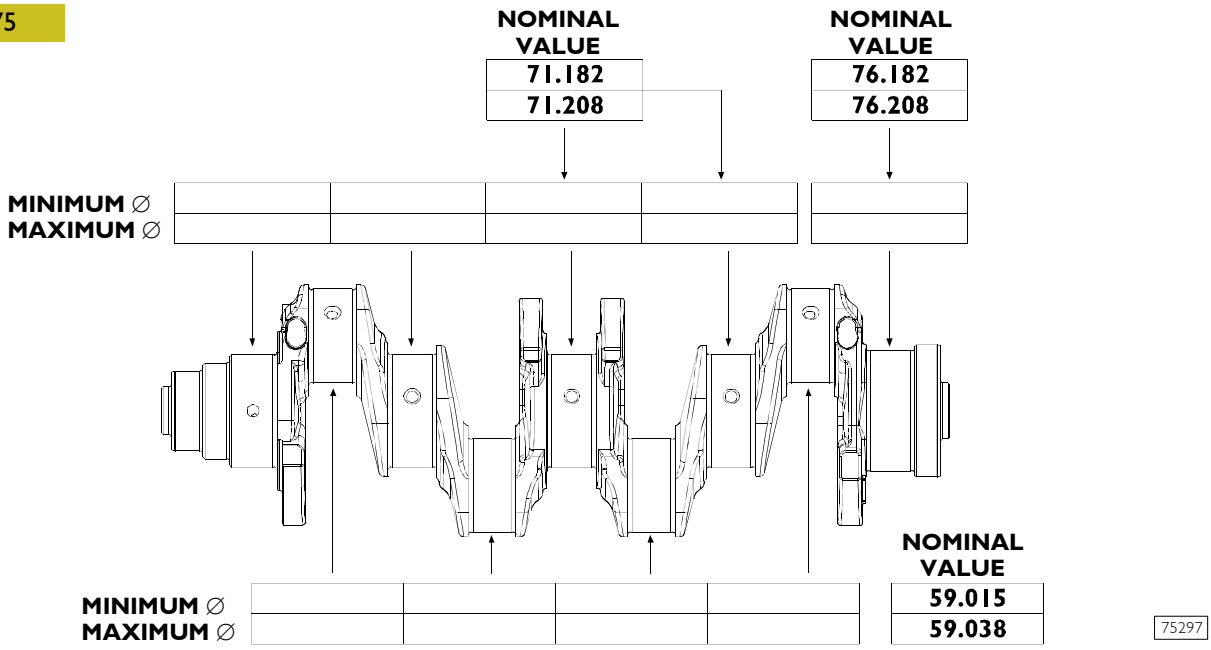

TABLE IN WHICH TO ENTER THE MEASUREMENTS OF THE CRANKSHAFT MAIN JOURNALS AND CRANKPINS

The main journals and crankpins must always be ground to the same undersize class.
The undersizing performed, on the main journals or crankpins, must be marked by punching on the side of crank arm no. 1.

For undersized crankpins, letter M.
For undersized main journals, letter B.
For undersized crankpins and main journals, letter MB.

The undersize classes are:
0.254 – 0.508 mm.

Checking crankshaft

Figure 77

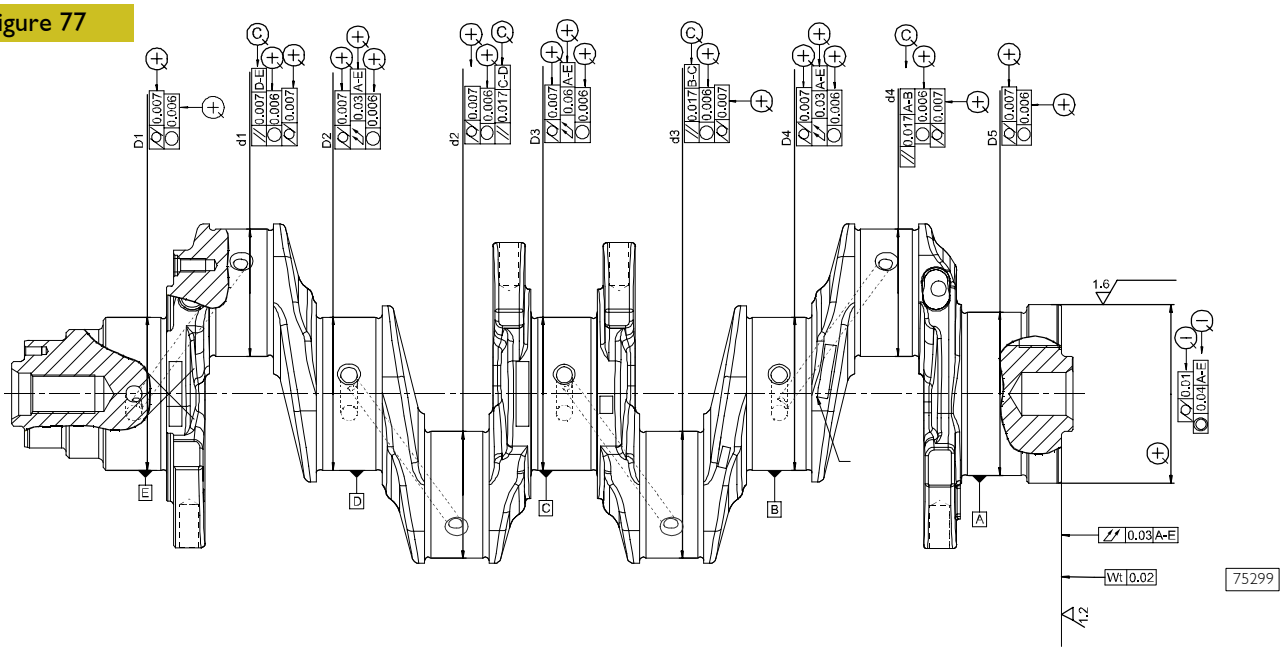

MAIN CRANKSHAFT TOLERANCES

TOLERANCES	TOLERANCE CHARACTERISTIC	SYMBOL
SHAPE	Circularity	○
	Cylindricality	⌭
DIRECTION	Parallelism	//
	Perpendicularity	⊥
POSITION	Concentricity or coaxiality	◎
OSCILLATION	Circular oscillation	↗
	Total oscillation	↗↗

CLASS OF IMPORTANCE ASCRIBED TO THE PRODUCT CHARACTERISTICS	SYMBOL
CRITICAL	©
IMPORTANT	⊕
SECONDARY	⊖

Figure 78

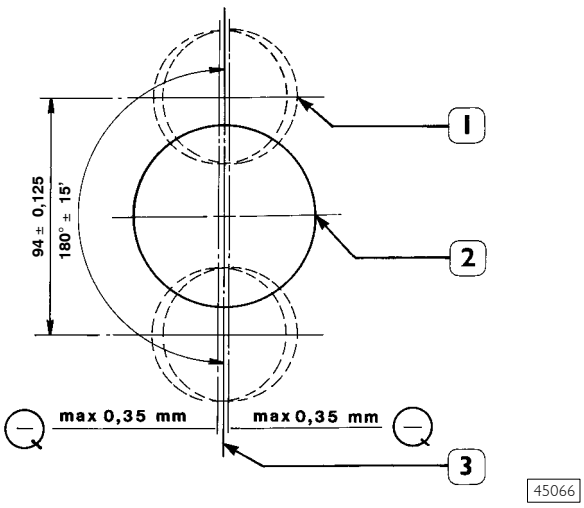

The checks on the tolerances indicated in the figures must be made after grinding the crankshaft pins.

SYMMETRY BETWEEN MAIN JOURNALS AND CRANKPINS

1. Crankpins
2. Main journals
3. Normal position

After grinding, keep to the following:

- ❑ Round off the edges of deburring the holes for lubrication of the main journals and crankpins.

JOURNAL ON TIMING SYSTEM SIDE

Figure 79

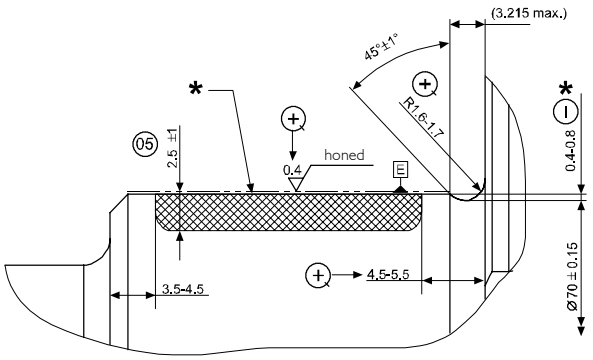

INTERMEDIATE JOURNALS No. 2-4

Figure 80

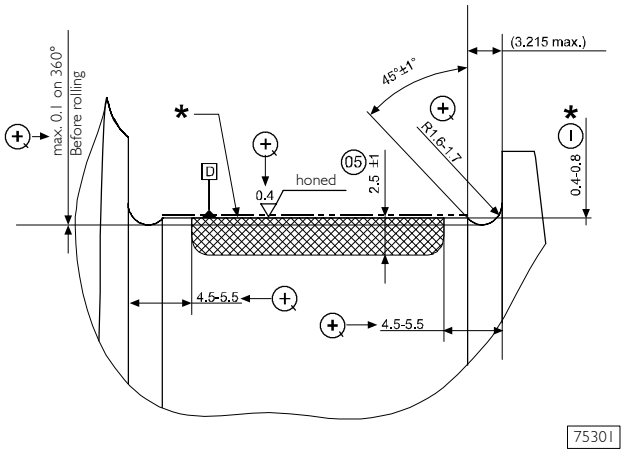

INTERMEDIATE JOURNAL No. 3

Figure 81

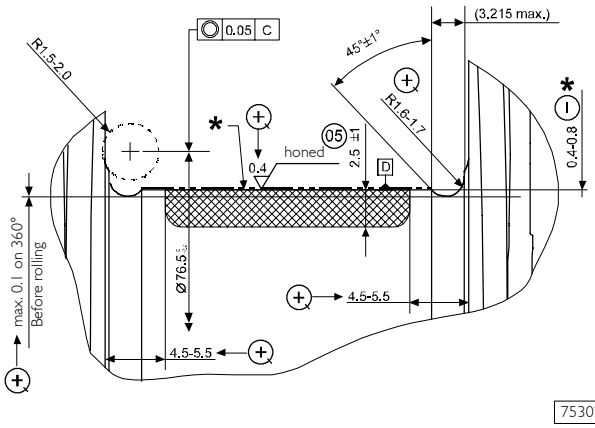

MAIN DATA OF MAIN JOURNALS AND CRANKPINS

JOURNAL ON FLYWHEEL SIDE

Figure 82

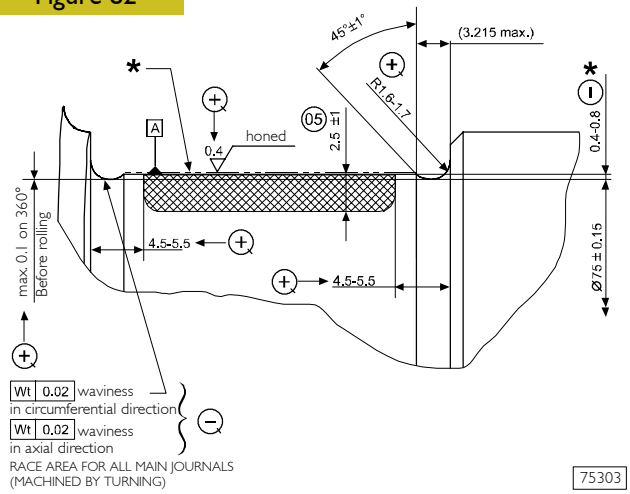

CRANKPINS

Figure 83

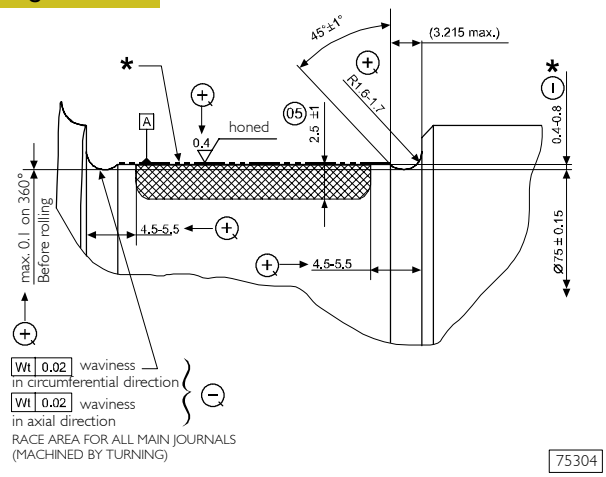

* On both races, on all 360°.

Since, during the 0.254 and 0.508 mm undersizing on the diameter of the crankpins and main journals, the rolled portion of the side races of the pins may get involved, it is necessary to turn the races keeping to the data given in the figure and to do the rolling keeping to the following instructions.

Rolling force:

- ❑ 1st main journal 925 ±25 daN.
- ❑ 2nd – 3rd – 4th – 5th main journal 1850 ±50 daN.
- ❑ crankpin 1850 ±50 daN.

- ❑ Rolling turns: 3 approach, 12 effective, 3 out.
- ❑ Rolling speed: 56 rpm.
- ❑ Decrease in crankpin race depth after rolling: 0.15 – 0.30 mm*.
- ❑ Decrease in main journal race depth after rolling: 0.15 – 0.30 mm*.

* Measured with calibrated rollers Ø 2.5 mm.

Figure 84

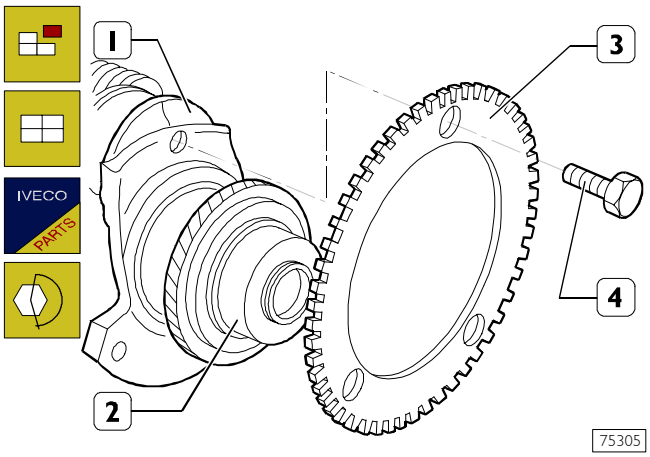

Take out the screws (4) and replace the phonic wheel (3).
The screws (4) are coated with LOCTITE 218 and must be replaced with fresh ones after each disassembly.
They must be tightened to a torque of 15 Nm.

Replacing timing control gear

On finding the timing control gear teeth (1) damaged or worn, remove them from the crankshaft (2) using a suitable extractor.

The new gear is fitted onto the crankshaft by heating it to a temperature of 200°C for no longer than 15 minutes.

On completing assembly and after the gear has cooled, it must withstand a torque of 150 Nm without slipping.

ENGINE ASSEMBLY

The following parts must be replaced with new ones at the time of assembly: retaining rings, seals and gaskets, screws whose thread is coated with sealant.

Figure 85

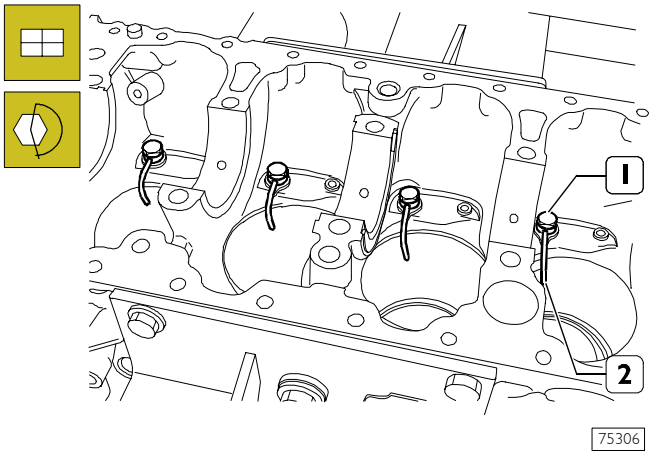

Fit on the oil spray nozzles (2) and tighten the couplings (1) to the prescribed torque.

Fitting main bearings

Figure 86

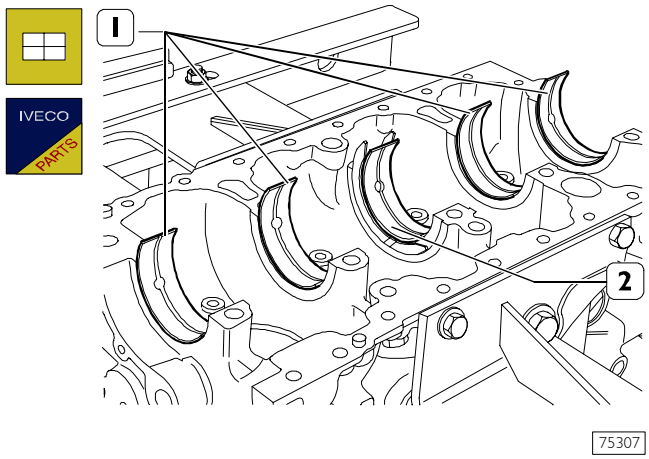

Not having found it necessary to replace the main bearings, they need to be fitted back on in the same sequence and position found upon disassembly.

The main bearings (1) are supplied as spare parts undersized on the inside diameter by 0.254 – 0.508 mm.

Do not do any accommodating on the bearings.

Thoroughly clean the top main bearing shells (1) and position them in the crankcase.

The middle half ring (2) is fitted with thrust washers.

540811 Measuring main journal assembly clearance

Figure 87

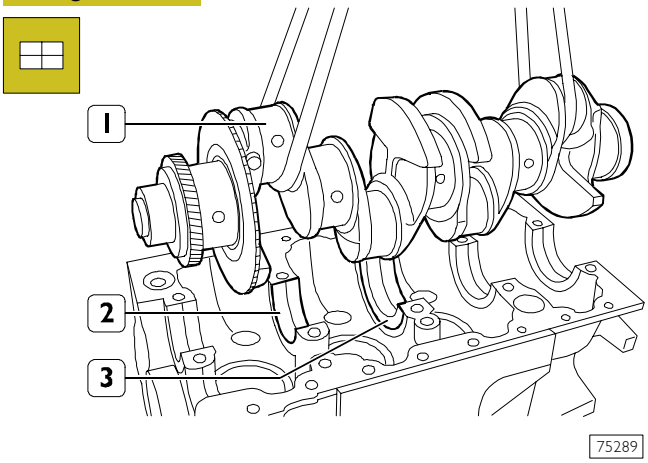

Mount the crankshaft (1).
Check the clearance between the crankshaft main journals and their respective bearings by proceeding as follows:

- ❑ Thoroughly clean the pins.
- ❑ Apply a calibrated wire onto the main journals.

Figure 88

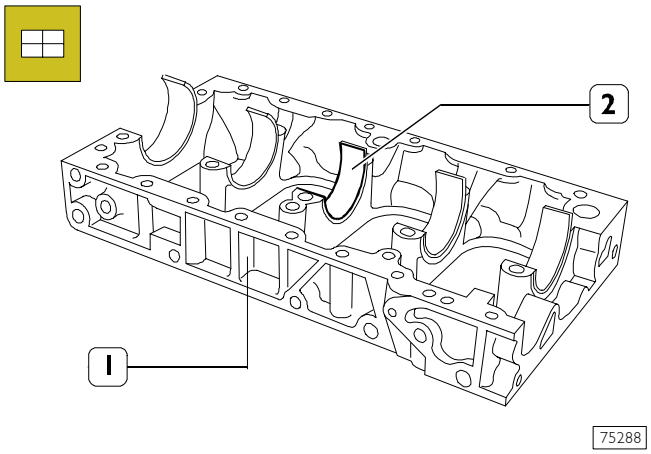

Thoroughly clean the bottom main bearing shells (2) and mount them in the crankcase base (1).

Figure 89

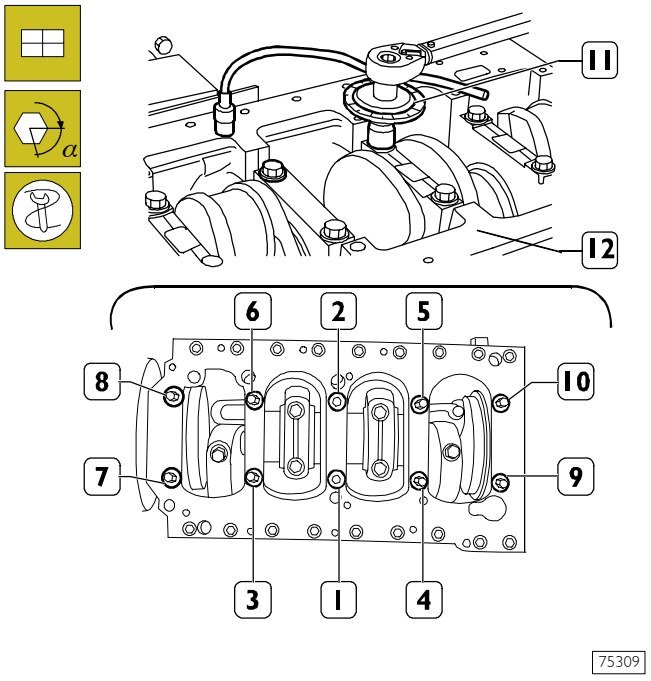

Mount the crankcase base (12).

Tighten the screws in the sequence shown in the figure in three steps:

- ❑ Step 1: with a torque wrench, to a torque of 50 Nm.
- ❑ Step 2: closing to an angle of 60°.
- ❑ Step 3: closing to an angle of 60°.

Use tool 99395216 (11) for the angle closing.

Figure 90

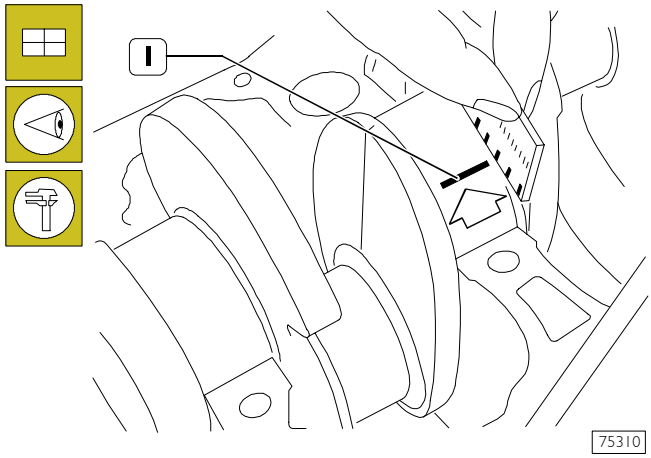

❑ Remove the bottom crankcase.

The clearance between the main bearings and their associated pins is measured by comparing the length of the calibrated wire (1), at the point of greatest crushing, with the graduated scale on the casing containing the calibrated wire. The numbers on the scale indicate the clearance of the coupling in millimetres, which must be 0.032 ÷ 0.102 mm. If the clearance is not as prescribed, replace the bearings and repeat the check.

Checking crankshaft end float

Figure 91

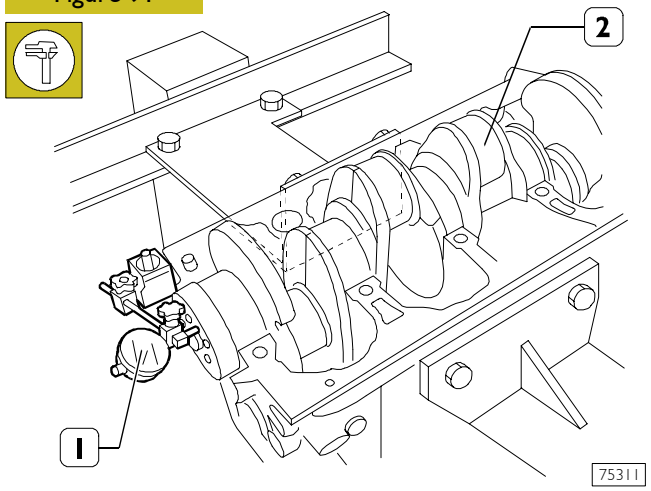

The end float is checked by setting a dial gauge (1) with a magnetic base on the crankshaft (2) as shown in the figure. The normal assembly clearance is 0.060 – 0.310 mm.

If you find the clearance to be greater than as required, replace the rear main bearing shells carrying the thrust bearings and repeat the clearance check between the crankshaft pins and the main bearing shells.

If the end float of the crankshaft does not come within the prescribed values, it is necessary to grind the crankshaft and accordingly change the main bearing shells.

NOTE: The middle main bearing has half thrust washers integrated in it, so it performs the function of a thrust bearing. It is supplied as a spare part only with the normal shoulder thickness.

Figure 92

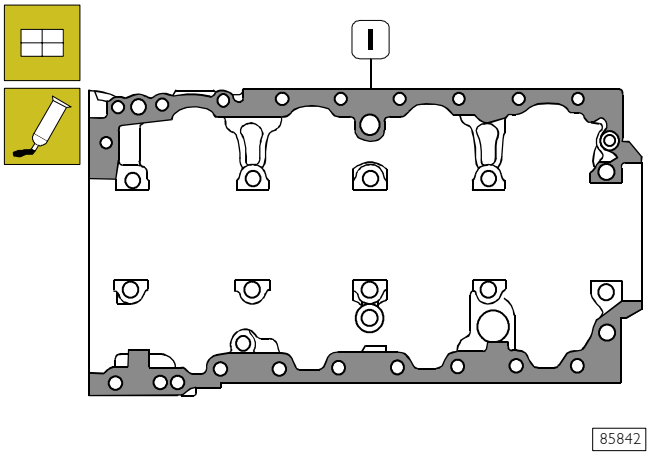

Thoroughly clean the crankcase / crankcase base mating surface.
Apply, on base, sealant LOCTITE 510 IVECO no. 93162432, as indicated in the scheme. The sealant must result to be even, not patchy.

Mount the crankcase base within 10 minutes of applying the sealant.

Figure 93

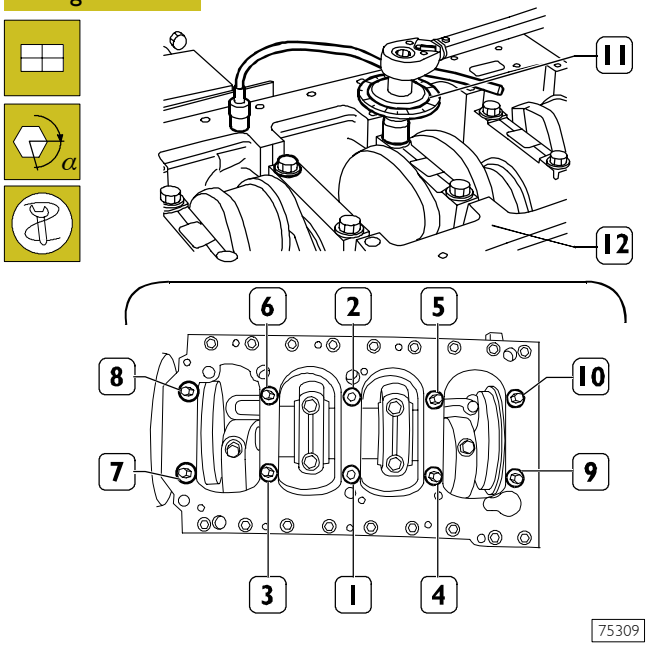

Mount the crankcase base (12) and tighten the fixing screws in three stages, following the sequence shown in the figure:

- ❑ Step 1: with a torque wrench, to a torque of 50 Nm.
- ❑ Step 2: closing to an angle of 60°.
- ❑ Step 3: closing to an angle of 60°.

Use tool 99395216 (11) for the angle closing.

Figure 94

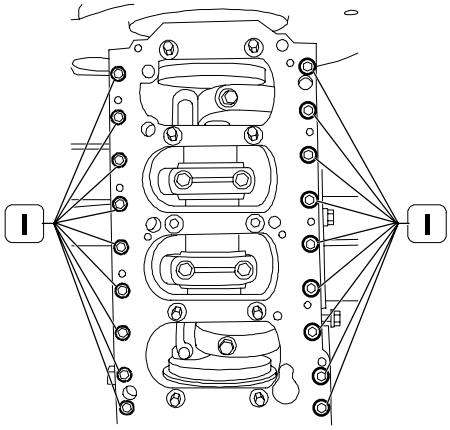

Then tighten the outer screws (1) to a torque of 36 – 30 Nm.

540460 Fitting rear seal

Figure 95

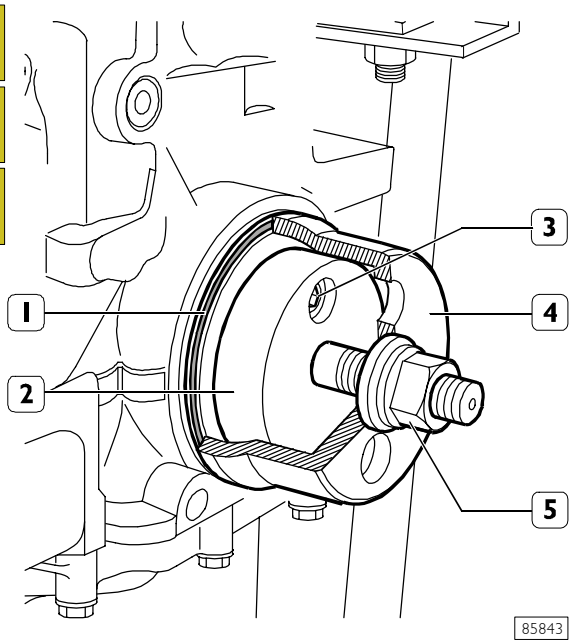

Carefully clean the seal seat. Apply LOCTITE 510 IVECO nr. 2992504 on the seal (1) for 30° in the points shown in the figure.
Lubricate the rear shank of the crankshaft with engine oil.
Fit part (2) of tool 99346255 onto the rear shank of the crankshaft; secure it with the screws (3) and key the fresh seal (1) onto it.
Position part (4) on part (2); screw down the nut (5) to fit the seal (1) fully inside the crankcase.

540850 ENGINE FLYWHEEL

Check the clutch disc mating surface: if there is any scoring, it has to be turned.

The nominal thickness of the engine flywheel is 50 ±0.6 mm.

Figure 96

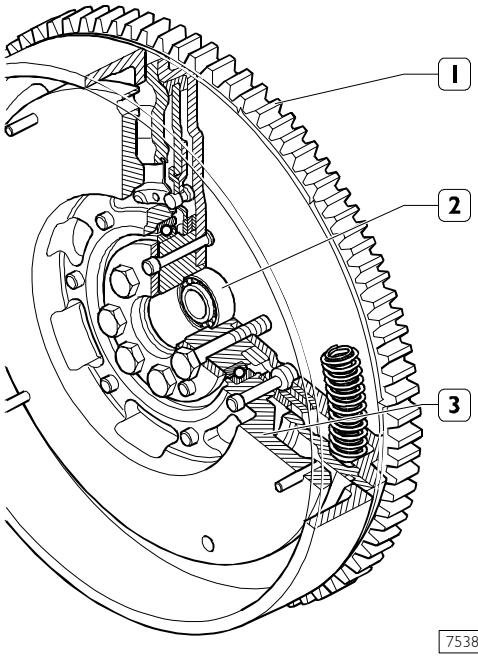

75389

540852 Replacing bearing supporting gearbox input shaft

The bearing (2) supporting the gearbox input shaft is removed and fitted using a general-purpose drift.

540853 Replacing engine flywheel ring gear

Check the state of the teeth of the ring gear (1). If any teeth are broken or excessively worn, remove it from the engine flywheel (3) with a general-purpose drift and fit the new one, after heating it to a temperature of 150°C for 15 ÷ 20 min. The bevel, made on the internal diameter of the ring, must be facing towards the engine.

Figure 97

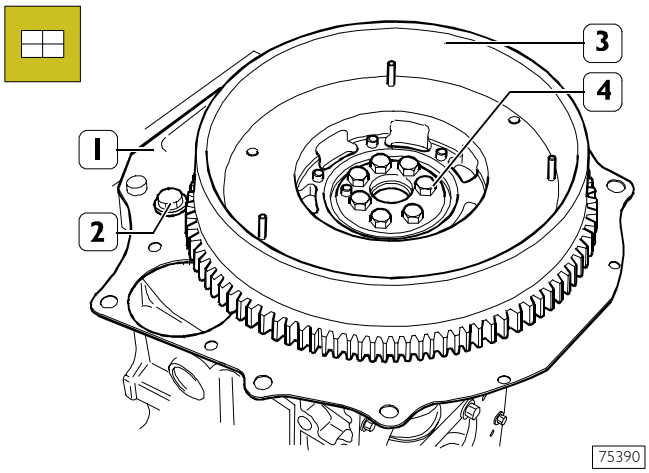

75390

Mount the sheet metal guard (1) and secure it to the crankcase tightening the screw (2) to the prescribed torque.
Mount the engine flywheel (3) and screw down the screws (4).

Figure 98

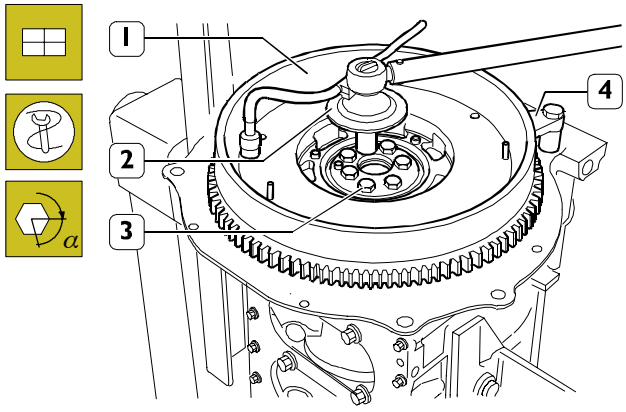

75391

Fit tool 99360351 (4) onto the crankcase to block rotation of the engine flywheel (1).

Tighten the screws (3) fixing the engine flywheel (1) in two steps:

- ❑ Step 1: with a torque wrench, to a torque of 30 Nm.
- ❑ Step 2: closing to an angle of 90°.

Use tool 99395216 (2) for the angle closing.

5408 CONNECTING ROD – PISTON ASSEMBLY

Figure 99

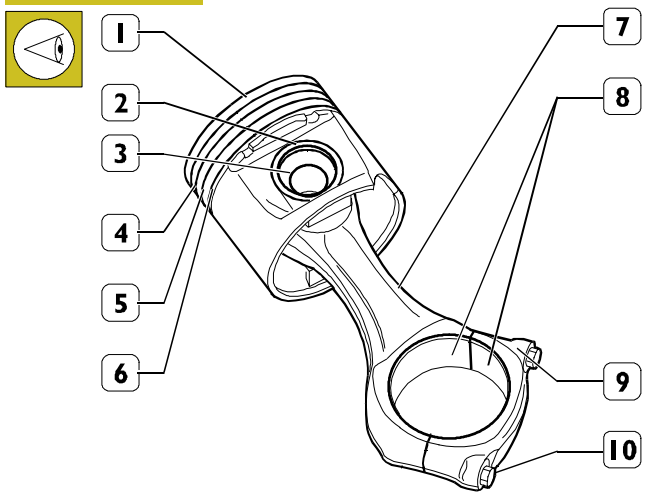

75392

PISTON – CONNECTING ROD ASSEMBLY
1. Piston – 2. Piston ring – 3. Pin – 4. Trapezoidal ring – 5. Oil scraper ring – 6. Slotted oil scraper ring with spiral spring – 7. Connecting rod body – 8. Bearing shells – 9. Connecting rod cap – 10. Cap fixing screws.

Check the pistons. They must show no signs of seizure, scoring, cracking or excessive wear; replace them if they do.

Figure 100

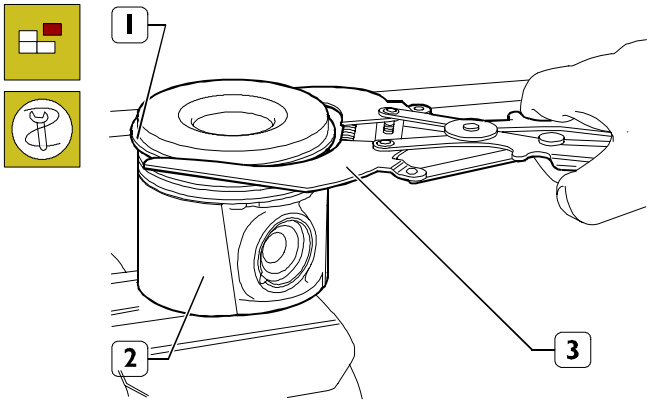

75393

Remove the piston rings (1) from the piston (2) using pliers 99360183 (3).

Figure 101

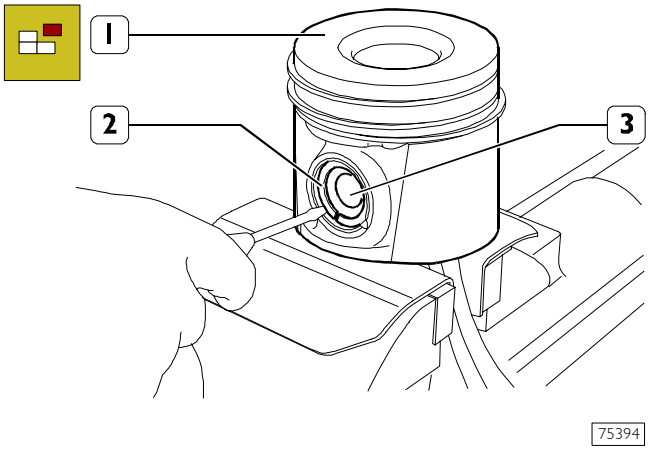

75394

Remove the piston (1) from the connecting rod, taking out the piston ring (2) and extracting the pin (3).

Figure 104

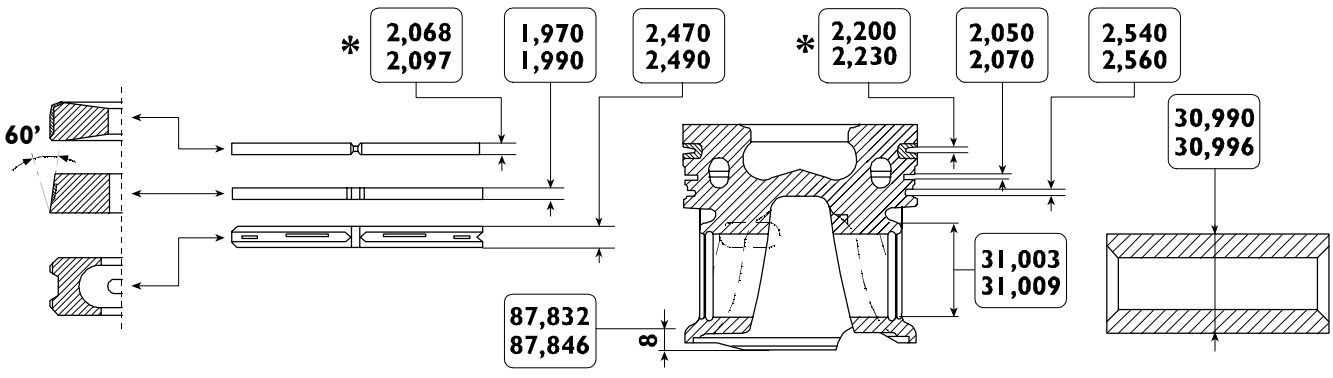

75396

MAIN DATA FOR MONDIAL PISTON, PINS AND PISTON RINGS

* Measured on the diameter of 91.4 mm.

540840 Pistons
Measuring piston diameter

Figure 102

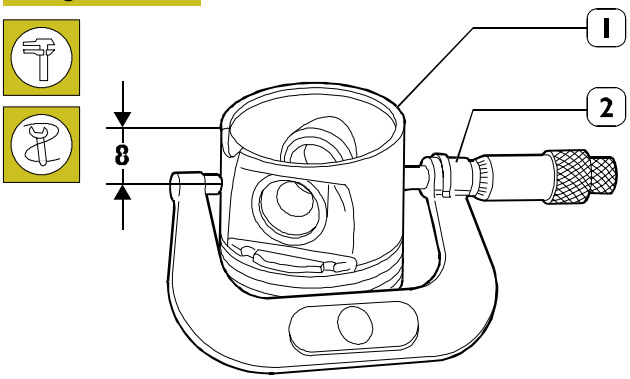

75941

Using a micrometer (2), measure the diameter of the piston (1) to determine the assembly clearance. The diameter has to be measured at the value shown.

The pistons are supplied as spare parts with the standard, normal and 0.4mm oversize diameters together with rings, pin and retaining rings.

Figure 103

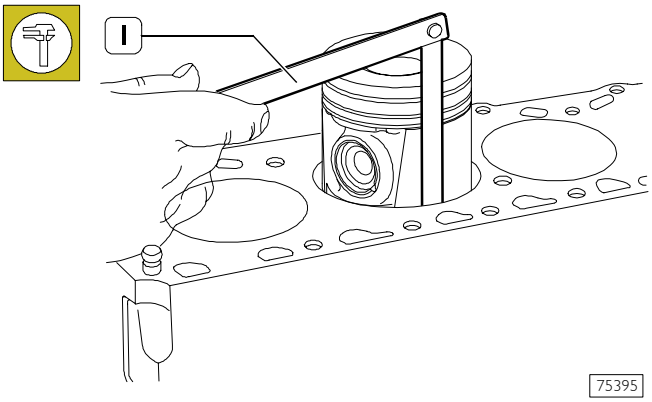

75395

The clearance between the piston and cylinder liner can also be checked using a feeler gauge (1) as illustrated in the figure.

540841 Piston pins

Figure 105

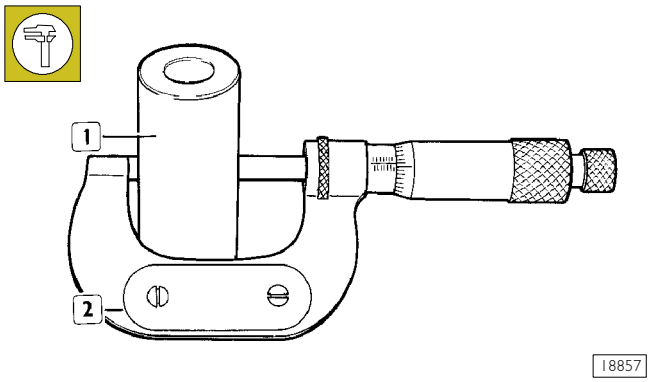

18857

Measuring the diameter of the piston pin (1) with a micrometer (2).

Conditions for correct pin-piston coupling

Figure 106

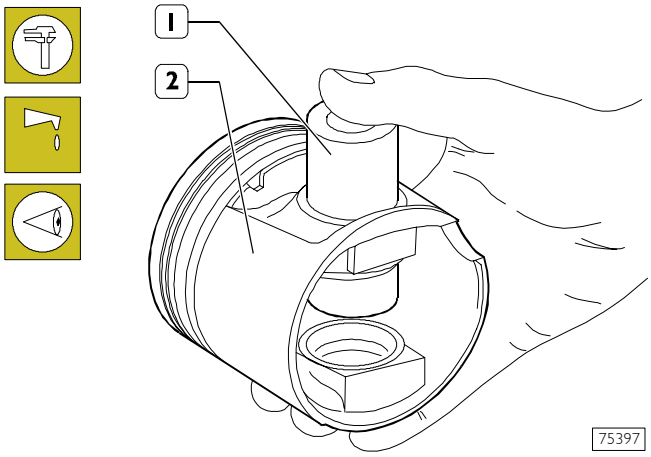

75397

Lubricate the pin (1) and its seat on the hubs of the piston (2) with engine oil. The pin must go into the piston by lightly pressing with the fingers and must not drop out by gravity.

540842 Piston rings

Figure 107

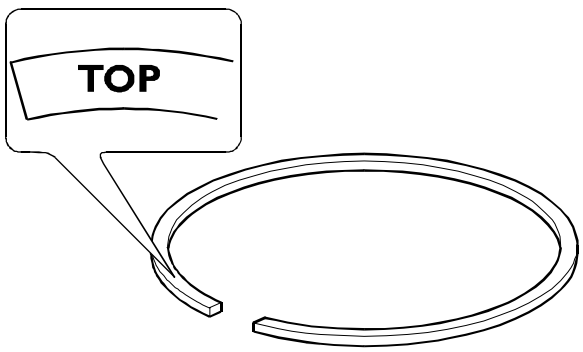

74947

The trapezoidal split rings (1st slot) and the oil scraper rings (2nd slot) have the word TOP etched in them; when fitting them on the piston, the word TOP must be facing upwards.

Figure 108

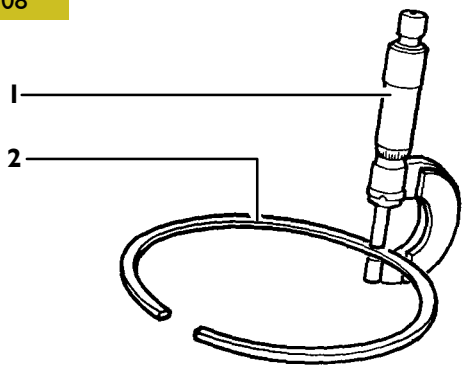

16552

Check the thickness of the piston rings (2) with a micrometer (1).

Figure 109

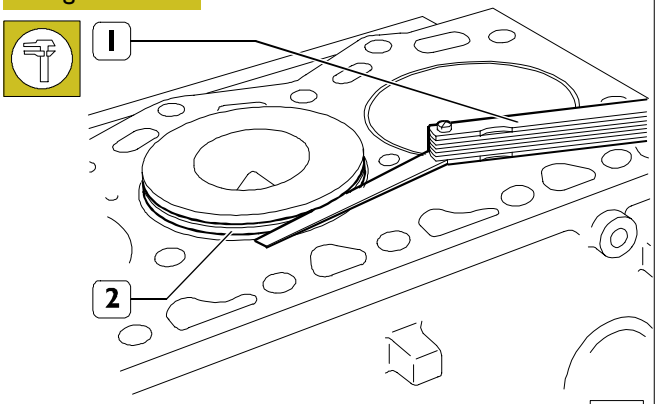

74948

Check the clearance between the trapezoidal ring (2) (1st slot) and the associated slot on the piston with a feeler gauge (1), proceeding as follows: insert the piston into the cylinder liner so that the ring (2) comes approximately half way out of it.

Figure 110

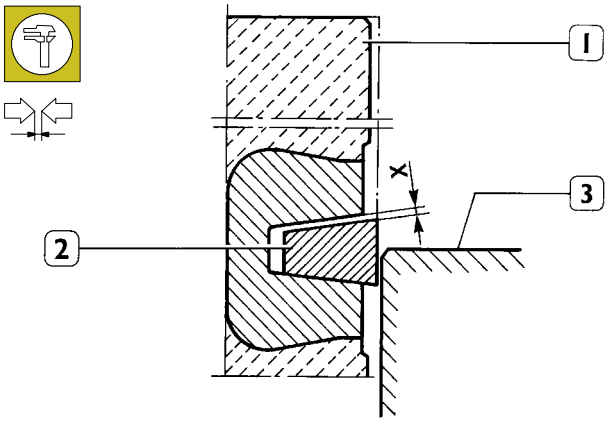

41104

DIAGRAM FOR MEASURING THE CLEARANCE X BETWEEN THE FIRST PISTON SLOT AND THE TRAPEZOIDAL RING
1. Piston slot – 2. Trapezoidal piston ring – 3. Cylinder liner

Using a feeler gauge (1, Figure 109), check the clearance (X) between the ring (2) and the slot (1); this clearance must have the prescribed value.

Figure 111

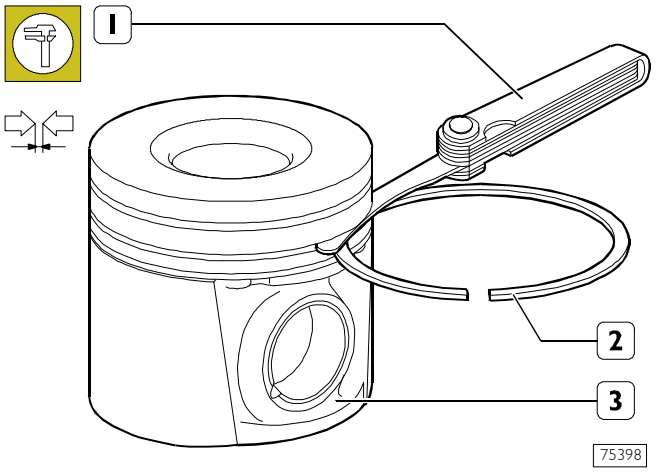

Check the clearance between the piston rings (2) of the 2nd and 3rd slot and the associated seats on the piston (3) with a feeler gauge (1).

Figure 112

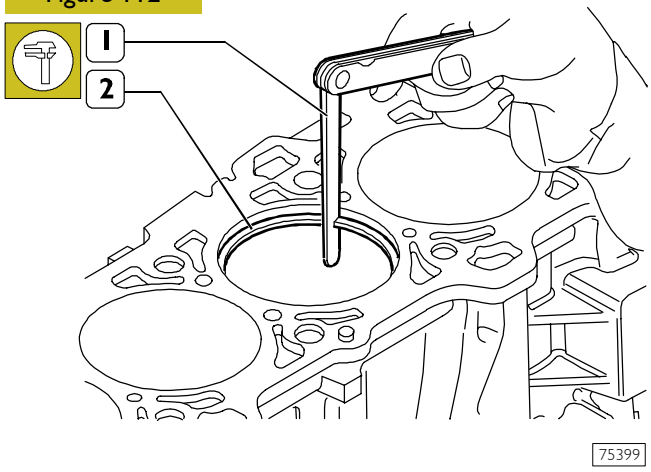

Check the opening between the ends of the piston rings (2) inserted in the cylinder liner using a feeler gauge (1).

540830 Connecting rods

Figure 113

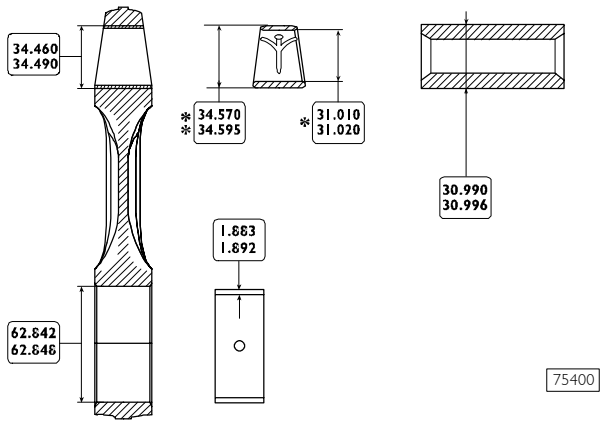

MAIN DATA OF THE CONNECTING ROD, BUSHING, PISTON PIN AND BEARING SHELLS

* Internal diameter to obtain after driving into the small end and grinding with a reamer.
** Dimension cannot be measured in the free state.
*** Thickness of the bearing shell supplied as a spare part.

Each connecting rod has its cap marked:

- ❑ with a letter: O or X indicating the diameter class of the big end mounted in production;
- ❑ with a number indicating the weight class of the connecting rod mounted in production.

In addition, it could be stamped with the number of the cylinder in which it is fitted.

In the event of replacement it is therefore necessary to number the new connecting rod with the same number as the one replaced.

The numbering must be done on the opposite side to the bearing shell retaining slots.

The connecting rods are supplied as spare parts with the diameter of the big end 62.842 – 62.848 mm marked with the letter O and the weight class marked with the number 33.

It is not permissible to remove material.

540834 Bushes

Check that the bush in the small end has not come loose and shows no sign of seizure or scoring. If it does, replace the complete connecting rod.

Checking connecting rods

Figure 114

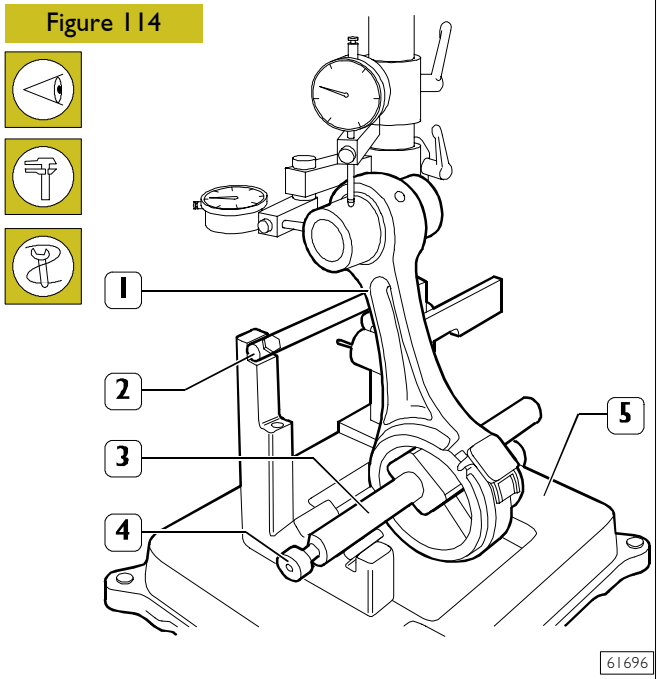

Check the alignment of the axes of the connecting rods (1) with device 99395363 (5), proceeding as follows:

- ❑ Fit the connecting rod (1) on the spindle of the tool 99395363 (5) and lock it with the screw (4).
- ❑ Set the spindle (3) on the V-prisms, resting the connecting rod (1) on the stop bar (2).

Checking torsion

Figure 115

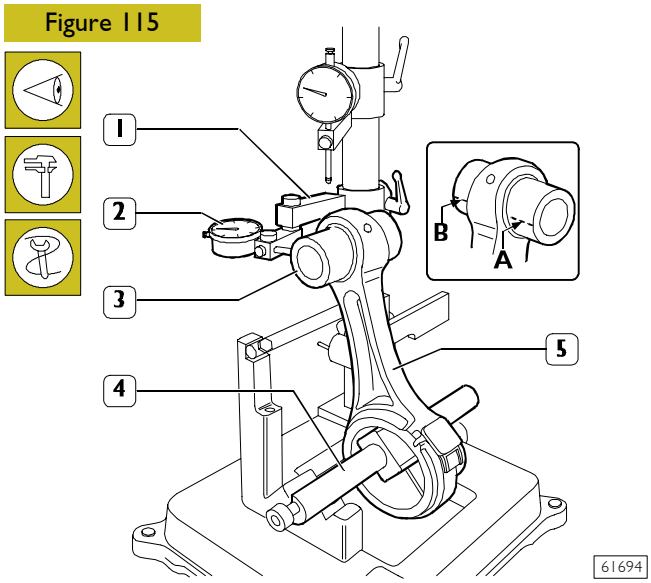

Check the torsion of the connecting rod (5) by comparing two points (**A** and **B**) of the pin (3) on the horizontal plane of the axis of the connecting rod.
Position the mount (1) of the dial gauge (2) so that this pre-loads by approx. 0.5 mm on the pin (3) at point A and zero the dial gauge (2). Shift the spindle (4) with the connecting rod (5) and compare any deviation on the opposite side B of the pin (3): the difference between A and B must be no greater than 0.08 mm.

Checking bending

Figure 116

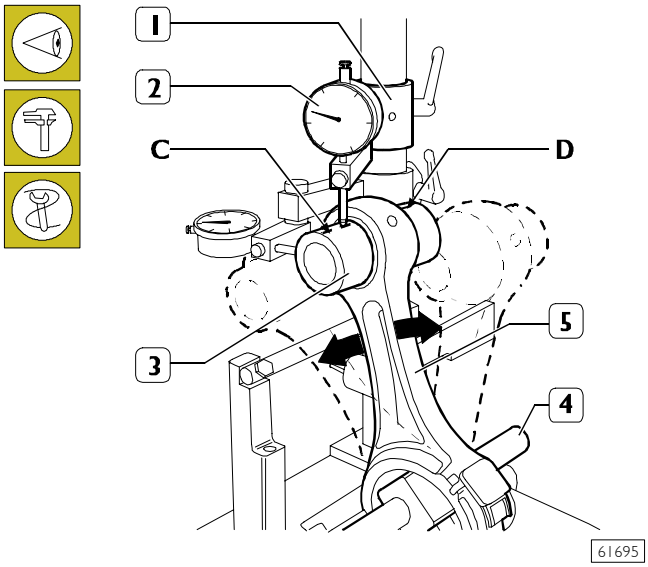

Check the bending of the connecting rod (5) by comparing two points C and D of the pin (3) on the vertical plane of the axis of the connecting rod.
Position the vertical mount (1) of the dial gauge (2) so that this rests on the pin (3) at point C.
Swing the connecting rod backwards and forwards seeking the highest position of the pin and in this condition zero the dial gauge (2).
Shift the spindle with the connecting rod (5) and repeat the check on the highest point on the opposite side D of the pin (3). The difference between point C and point D must be no greater than 0.08 mm.

Assembling connecting rod-piston assembly

Figure 117

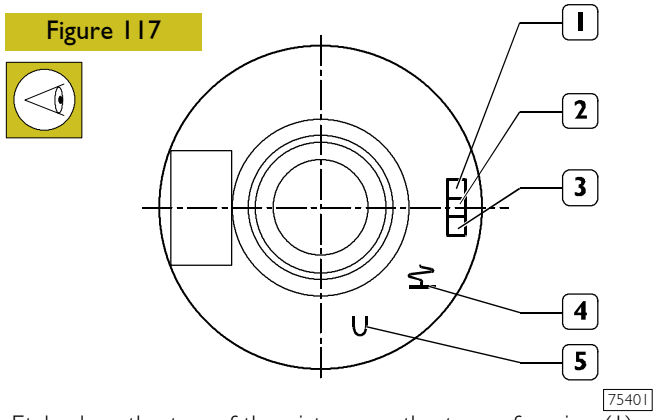

Etched on the top of the piston are: the type of engine (1), class selection (2) and supplier (3) as well as the direction of fitting the piston in the cylinder liner (4). The mark (5) is for passing the 1st slot insert adhesion test.

Figure 118

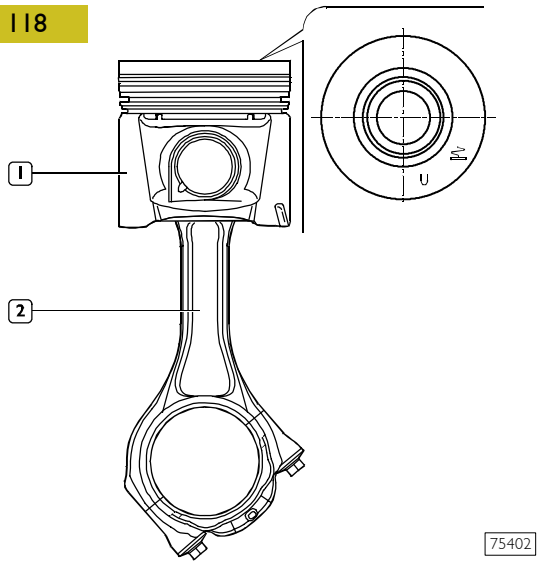

Connect the piston (1) to the connecting rod (2) together with its cap so that the piston assembly reference, position of the connecting rod and of the cap are observed as shown in the figure.

Figure 119

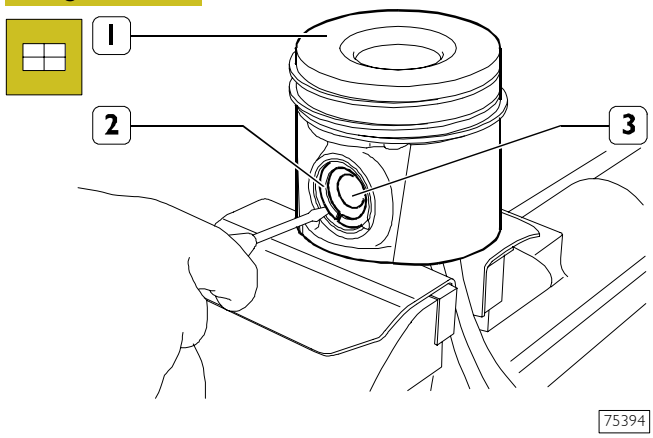

Position the piston (1) on the connecting rod, insert the pin (3) and secure it with the split rings (2).

Checking for connecting rod – piston distortion

Figure 120

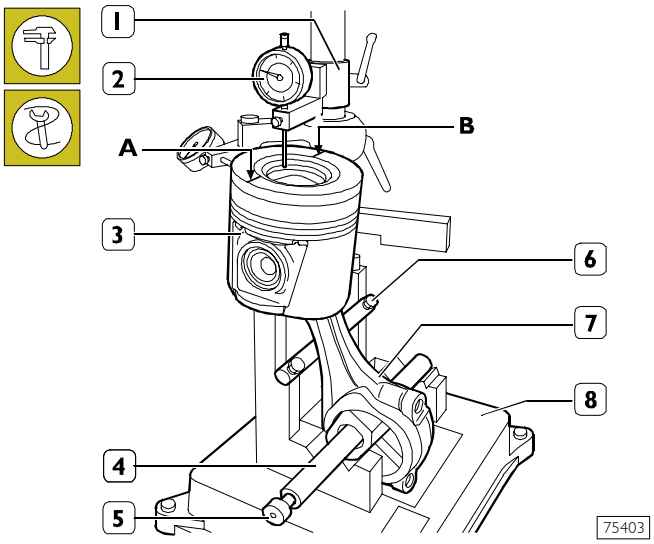

After fitting the connecting rod – piston assembly together, check for distortion with the tool 99395363 (8) as follows:

- ❑ Fit the connecting rod (7) together with the piston (3) on the spindle (4) of tool 99395363 (8) and lock it with the screw (5).
- ❑ Rest the connecting rod (7) on the bar (6).
- ❑ Position the mount (1) of the dial gauge (2) so that this is positioned at point A of the piston with a pre-load of 0.5 mm and zero the dial gauge (2).
- ❑ Shift the spindle (4) so as to position the dial gauge (2) at point B of the piston (3) and check for any deviation.

Fitting piston rings

Figure 121

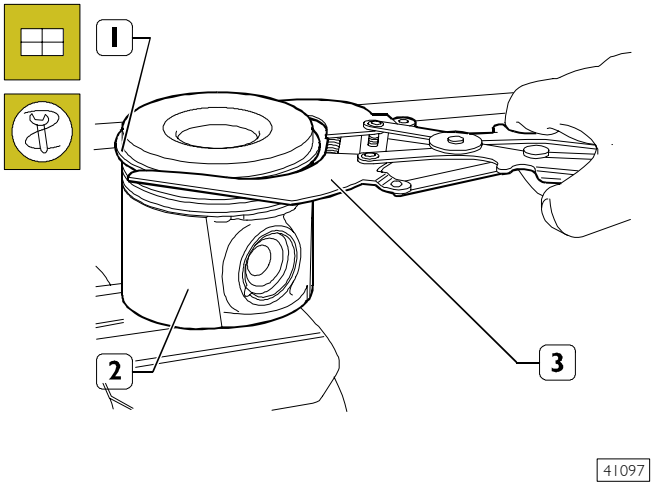

Fit the piston rings (1) on the piston (2) using the pliers 99360183 (3).

The 1st and 2nd slot rings need to be mounted with the word "TOP" facing upwards.

Fitting connecting rod – piston assemblies in cylinder barrels

Figure 122

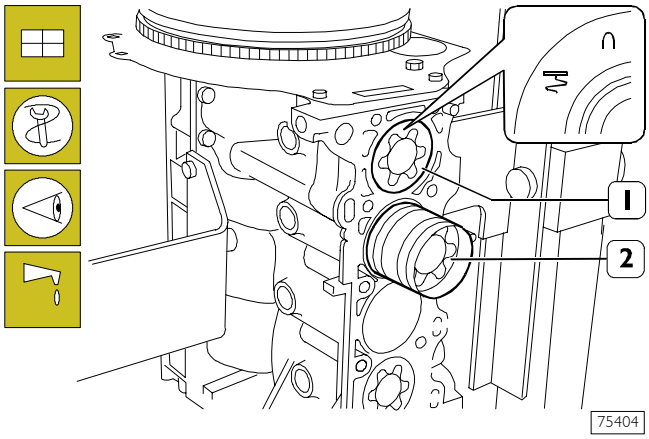

Lubricate the pistons well, including the piston rings and the inside of the cylinder liners.
With the aid of the clamp 99360605 (2), fit the connecting rod – piston assembly (1) in the cylinder liners, checking that:

- ❑ The number of each connecting rod corresponds to the cap mating number.
- ❑ The openings of the piston rings are staggered 120° apart.
- ❑ The pistons are all of the same weight.
- ❑ The symbol punched on the top of the pistons faces the engine flywheel, or the recess in the skirt of the pistons tallies with the oil spray nozzles.

Not finding it necessary to replace the connecting rod bearings, you need to fit them back in exactly the same sequence and position found on disassembly.

540831 Measuring crankpin assembly clearance

Figure 123

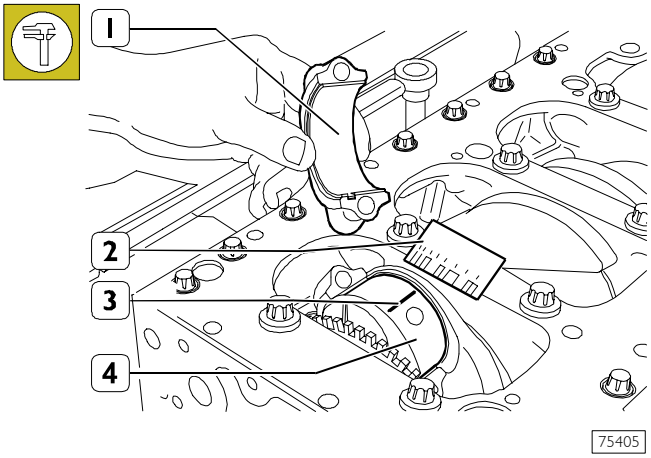

To measure the clearance, carry out the following steps:

- ❑ Thoroughly clean parts (1) and (4) and eliminate all traces of oil.
- ❑ Place a length of calibrated wire (3) on the crankshaft pins (4).

Figure 124

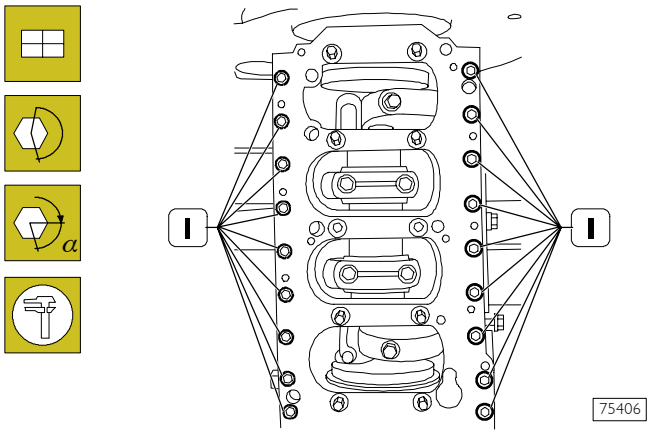

❑ Fit the connecting rod caps (2) with the associated bearing shells.

❑ Tighten the screws (3) in two steps:

- Step 1: with a torque wrench, to a torque of 50 Nm.
- Step 2: closing to an angle of 60°.

Use tool 99395216 (1) for the angle closing.

❑ Remove the cap (2) and determine the existing clearance by comparing the width of the calibrated wire (3, Figure 123) with the graduated scale on the case (2, Figure 123) that contained the calibrated wire. On finding a clearance other than as prescribed, replace the bearing shells and repeat the check.
On obtaining the prescribed clearance, lubricate the connecting rod bearing shells and fit them permanently by tightening the connecting rod cap fixing screws as described.

The connecting rod cap fixing screws must always be replaced for permanent assembly.

Manually check that the connecting rods slide axially on the pins of the crankshaft.

Checking piston protrusion

Figure 125

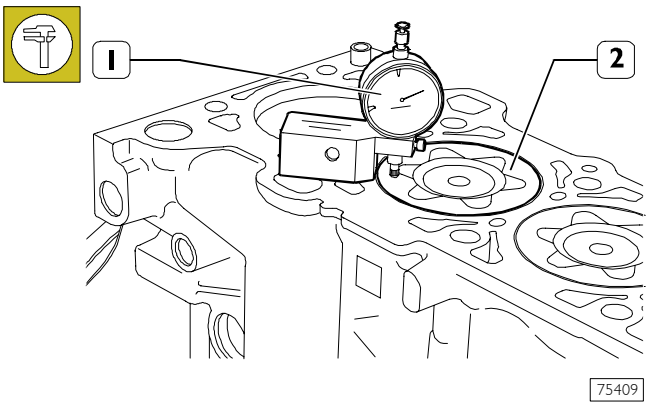

After mounting the connecting rod – piston assemblies, check the protrusion of the pistons (2) at the T.D.C. in relation to the top surface of the crankcase with a dial gauge (1).

The difference between the minimum and maximum protrusions of the four pistons must be = 0.15 mm.

The cylinder head gasket in the set of spare gaskets needed for complete engine overhaul is supplied with a single thickness. Clearly, it is supplied separately too.

Figure 126

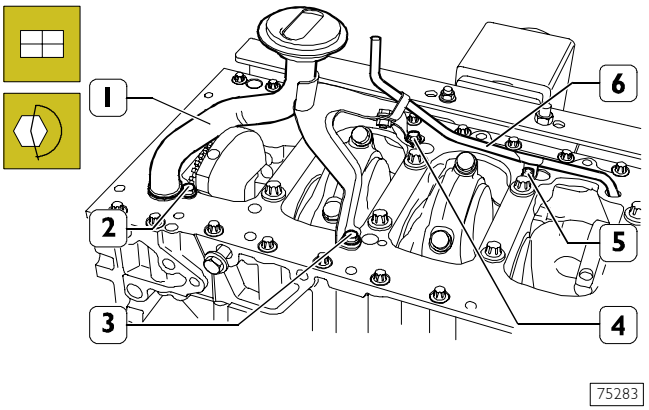

Mount the suction strainer (1) together with the pipe (6). Screw down the fixing screws (2-3-4-6) and tighten them to the prescribed torque.

Figure 127

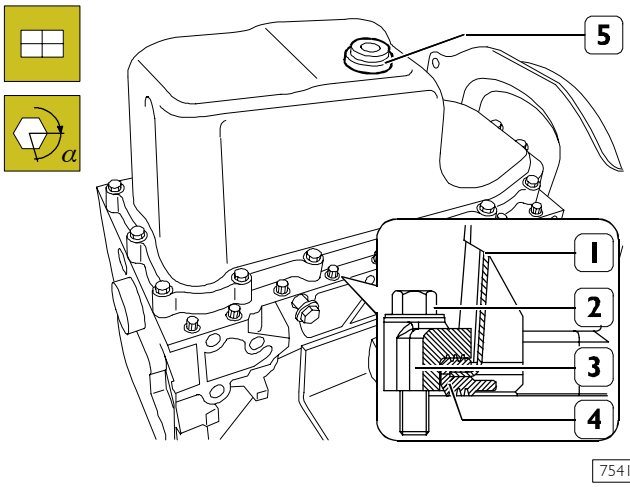

Fit the gasket (4) and the frame (3) onto the oil sump (1).
Screw down the fixing screws (2) and tighten them to the prescribed torque.
Screw down the oil drain plug (5) and tighten it to the prescribed torque.

560610 CYLINDER HEAD

Disassembly

Figure 128

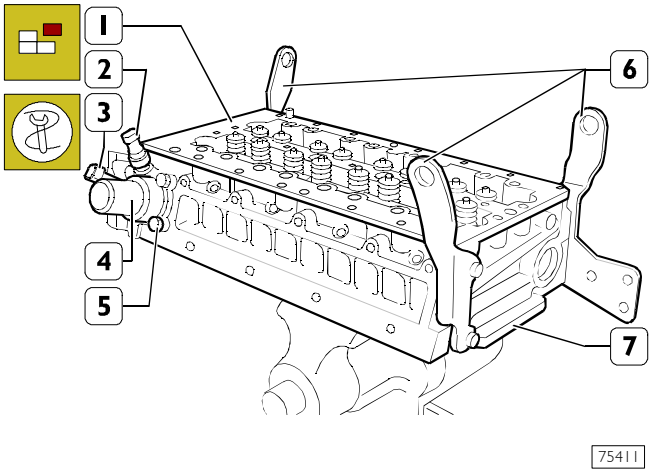

Place the cylinder head (1) on the mounting SP.2271 (7).
Remove the brackets (6) for lifting the engine.

Use the wrench SP 2262 to remove the timing sensors (2 and 3).

Take out the screws (5) and remove the thermostat casing (4).

541210 Removing valves

Figure 129

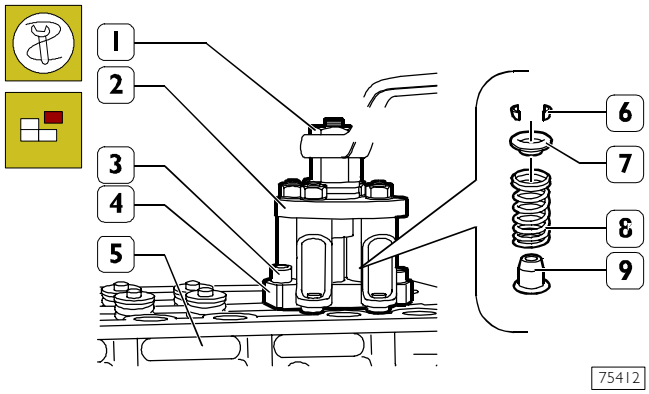

Fit part (4) of tool 99360260 onto the cylinder head (5) and secure it with the screws (3).

Fit part (2) of tool 99360260 onto part (4), screw down the nut (1) so that on compressing the springs (8) it is possible to remove the cotters (6). Then take out the plates (7) and the springs (8).

Using suitable pliers, remove the oil seal (9).

Repeat these operations on the remaining valves.

Turn the cylinder head over.

Figure 130

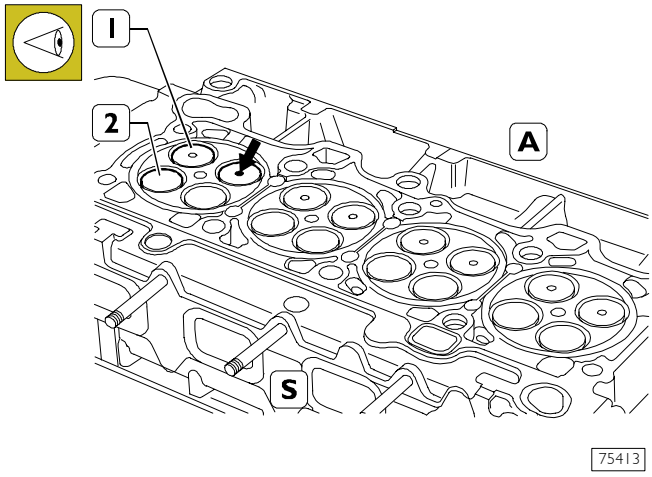

The intake (1) and exhaust (2) valves have the same diameter mushroom.

The central cavity (→) of the mushroom of the intake valve (1) is distinguished from that of the exhaust valve (2).

Before removing the valves from the cylinder head, number them so as to refit them, if they are replaced, in the same position found during removal.

A = intake side – S = exhaust side

Remove the intake (1) and exhaust (2) valves.

Checking cylinder head seal

Check the hydraulic seal using a suitable tool.
Pump in water heated to approx. 90°C at a pressure of 2 ÷ 3 bars.

Replace the cup plugs if they are found to leak at oil, using a suitable drift for their removal – assembly.

Before mounting the plugs, apply LOCTITE 270 water-reacting sealant on their sealing surfaces.

If there is any leakage from the cylinder head, it must be replaced.

Checking cylinder head mating surface

Figure 131

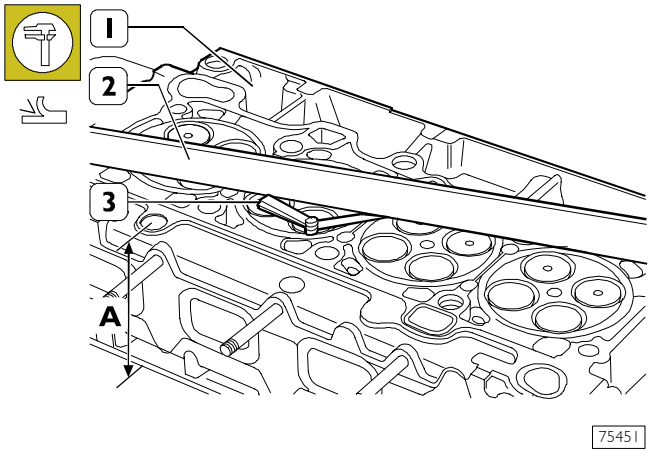

75451

The mating surface of the head (1) with the cylinder block is checked using a rule (2) and a feeler gauge (3).
The deformation found on the entire length of the cylinder head must be no greater than 0.20 mm.
For greater values, regrind the cylinder head according to the values and instructions given in the following figure.

The nominal thickness A of the cylinder head is 112 ±0.1 mm; the maximum permissible removal of metal must not exceed a thickness of 0.2 mm.

After regrinding, check the valve recessing and if necessary regrind the valve seats to make the prescribed valve recessing.

540662 VALVES

Figure 132

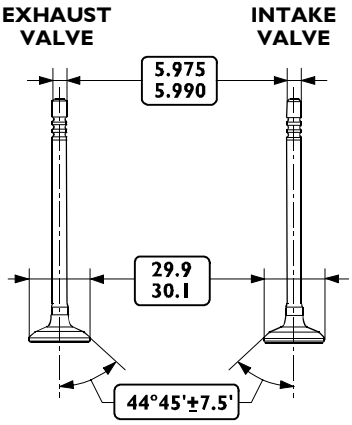

75452

MAIN DATA OF INTAKE AND EXHAUST VALVES

Removing deposits, refacing and checking valves

Figure 133

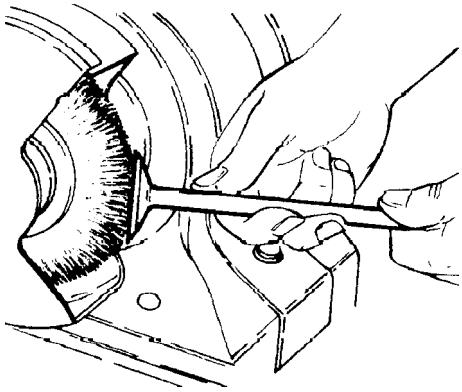

18625

Remove the carbon deposits on the valves with a wire brush. Check that the valves show no signs of seizure, cracking or burning.

Figure 134

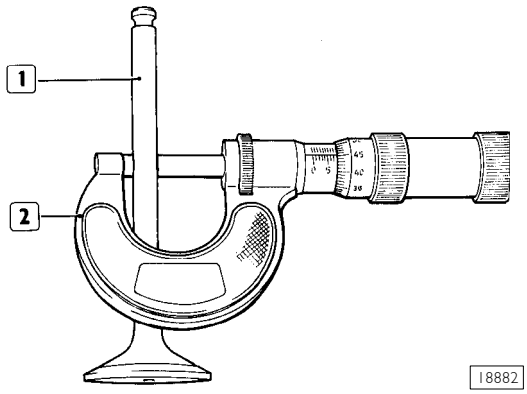

18882

Using a micrometer (2), measure the stem of the valves (1): it must be 5.975 – 5.990 mm. If necessary, regrind the seats on the valves with a grinding machine 99305018, removing as little material as possible.

Checking clearance between valve stem and valve guide and centring valves

Figure 135

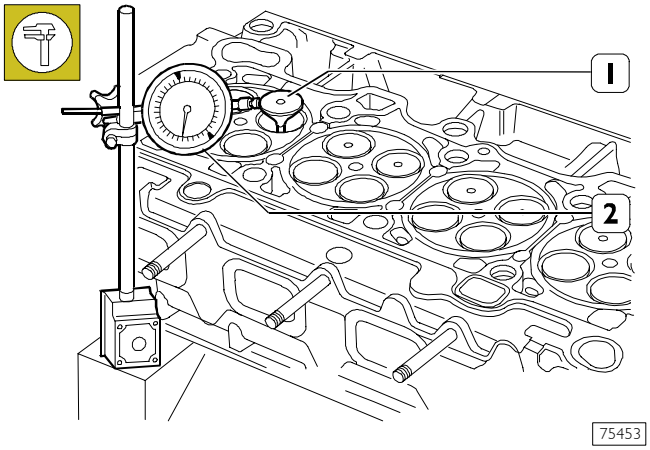

75453

The checks are made using a dial gauge (2) with a magnetic base, positioned as illustrated. The assembly clearance is 0.033 – 0.063 mm.
Making the valve (1) turn, check that the centring error is no greater than 0.03 mm.

540667 VALVE GUIDES

Replacing valve guides

Figure 136

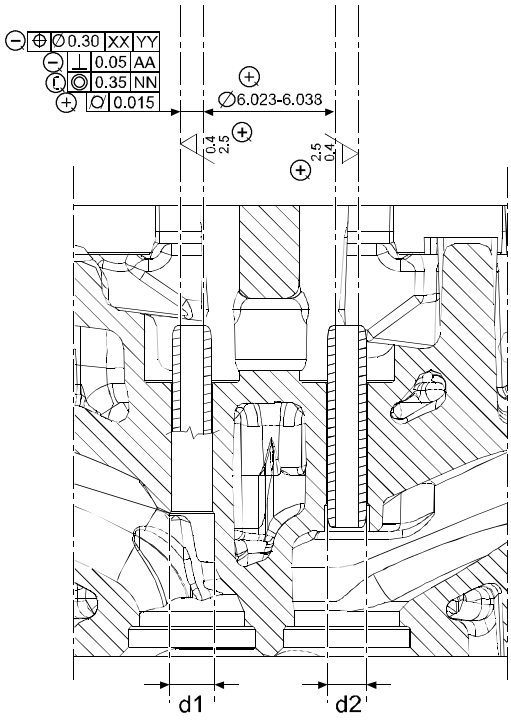

75454

MAIN DATA OF VALVE GUIDES – SEATS

Valve guide seat inside ∅	9.980 - 10.000 mm
Valve guide outside ∅	10.028 - 10.039 mm

* Measurement to be made after driving in the valve guides.

Figure 137

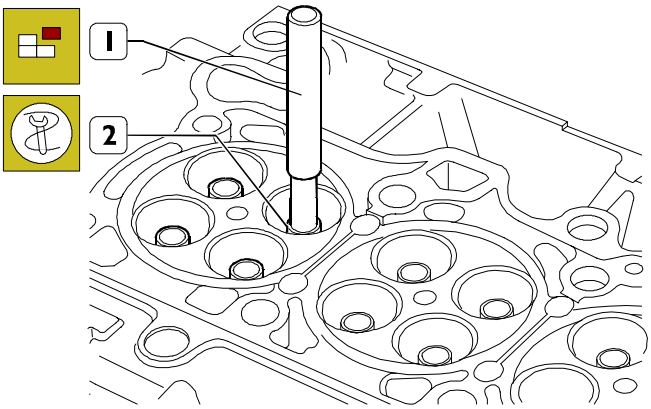

75455

Remove the valve guides (2) with the drift SP.2312 (1).

Figure 138

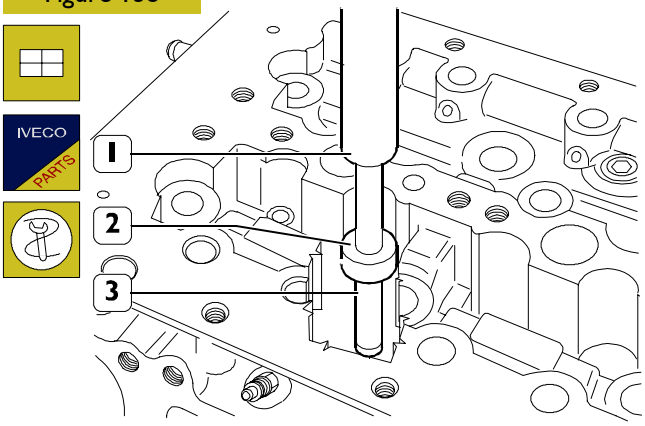

75456

Heat the cylinder head to 80 – 100°C and, using the drift SP.2312 (1) provided with part SP.2311 (2), mount the new valve guides (3) previously chilled in liquid nitrogen.

Boring valve guides

Figure 139

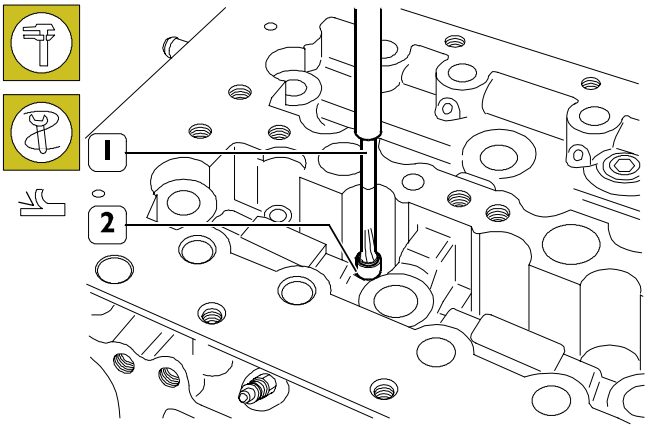

75457

After driving in the valve guides (2), regrind them with the smoother SP.2310 (1).

540661 VALVE SEATS

Regrinding - replacing valve seats

Figure 140

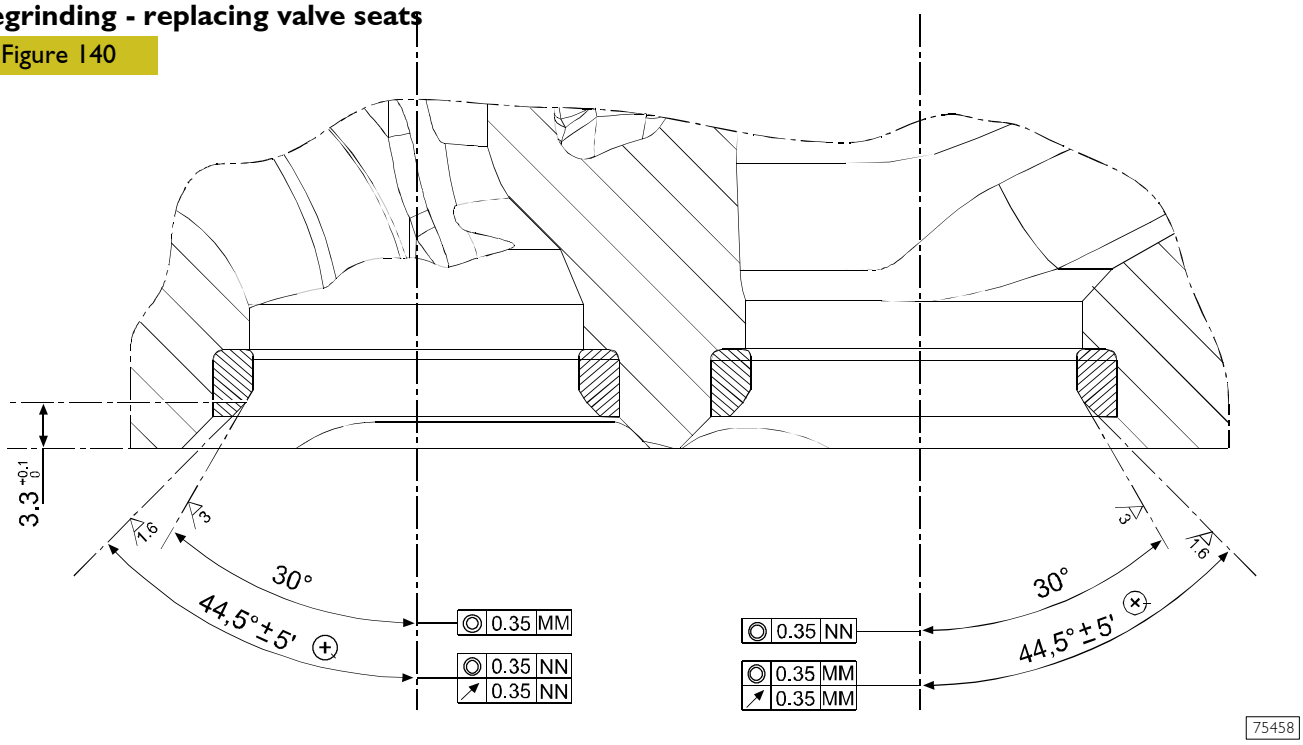

Check the valve seats. On finding any slight scoring or burns, regrind them with an appropriate tool according to the angles given in Figure 140.
Having to replace them, with the same tool and taking care not to affect the cylinder head, remove as much material from the valve seats as possible until, with a punch, it is possible to extract them from the cylinder head.

Heat the cylinder head to 80 ÷ 100°C and, using a suitable drift, fit in it the new valve seats, previously chilled in liquid nitrogen.
Using a specific tool, regrind the valve seats according to the angles given in Figure 140.

Figure 141

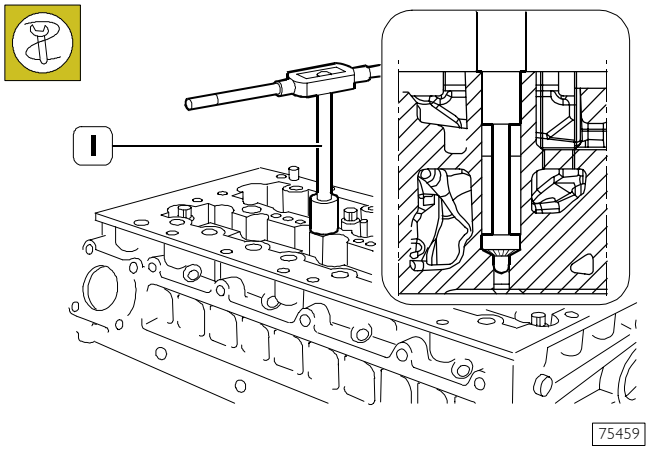

Using the milling cutter 99394038 (1), clean the injector seat of any deposits.

Mount the valves, block the seat of the electro-injectors and glow plugs; using a suitable tool, check the seal of the valves/seats.

Figure 142

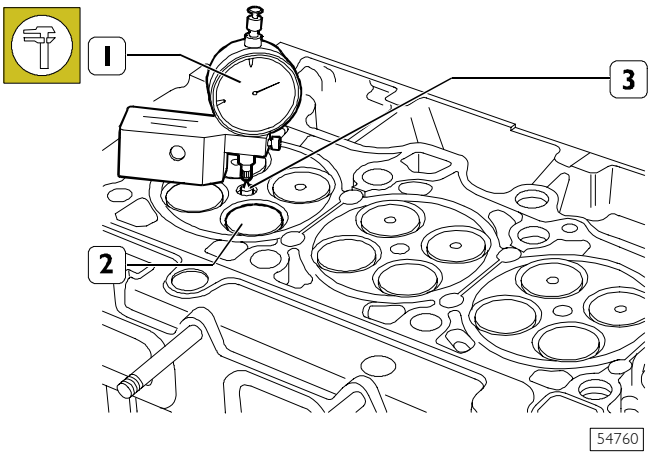

Using a dial gauge (1), check that, from the plane of the cylinder head, the valve recessing and the protrusion of the injector (3) and of the glow plug have the prescribed value:

- Valve recessing: 0.5 ÷ 0.8 mm.
- Injector protrusion: 2.77 ÷ 3.23 mm.
- Glow plug protrusion: 3.78 mm.

540665 VALVE SPRINGS

Figure 143

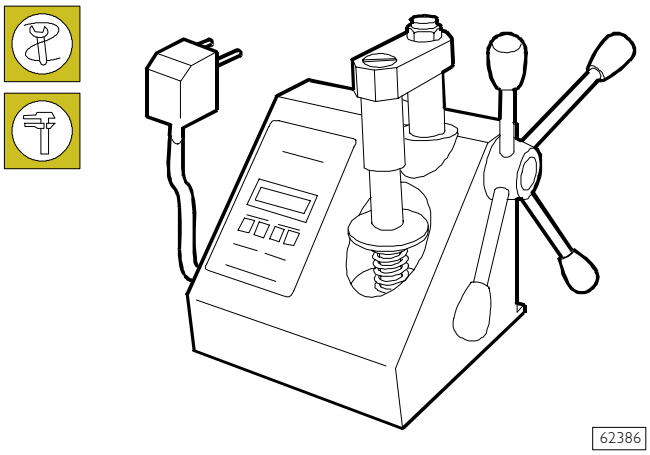

62386

Before assembly, check the flexibility of the valve springs with the tool 99305047. Compare the load and elastic deformation data with those of the new springs given in the following figures.

Figure 144

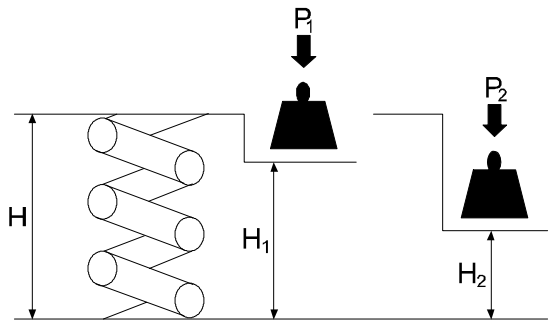

50676

MAIN DATA TO CHECK INTAKE AND EXHAUST VALVE SPRINGS

Height	Under a load of
mm	kg
H 54	Free
H1 45	P 243 ±12
H2 35	P1 533 ±24

ROCKER ARMS – TAPPETS

Figure 145

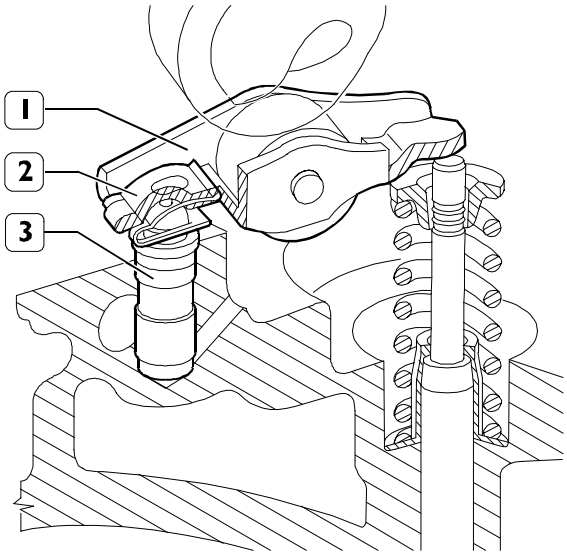

75461

COMPLETE ROCKER ARM ASSEMBLY

The rocker arm assembly is composed of the rocker arm (1), hydraulic tappet (3), made integral with each other by the clip (2).

Figure 146

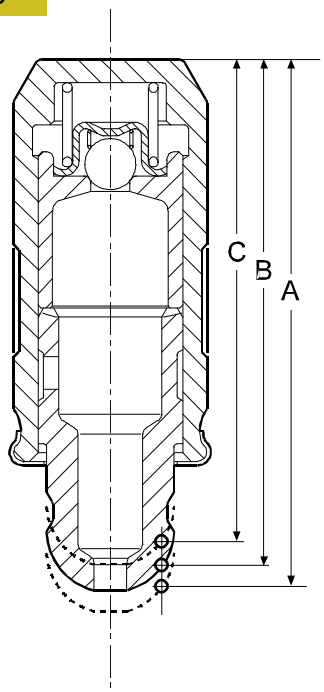

75942

CROSS-SECTION OF THE HYDRAULIC TAPPET

A = 32.44 ±0.3, end of stroke
B = 31.30, working position
C = 29.75 ±0.25, start of stroke

Figure 147

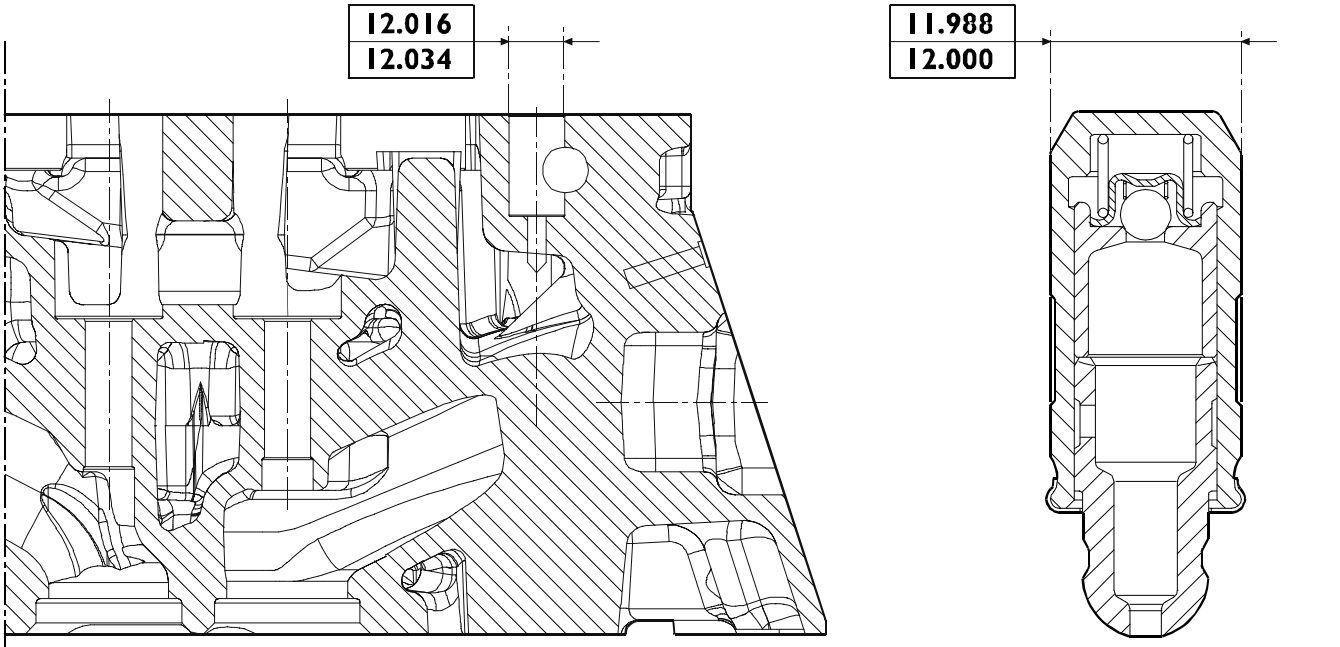

MAIN DATA HYDRAULIC TAPPETS – SEATS

Checks

The sliding surface of the tappets must have no scoring/dents; replace them if they do.

Using a micrometer, measure the diameter of the tappets and, using a bore meter, measure the diameter of the seats in the cylinder head; the difference in the measurements will give the assembly clearance.

FITTING CYLINDER HEADS

Figure 148

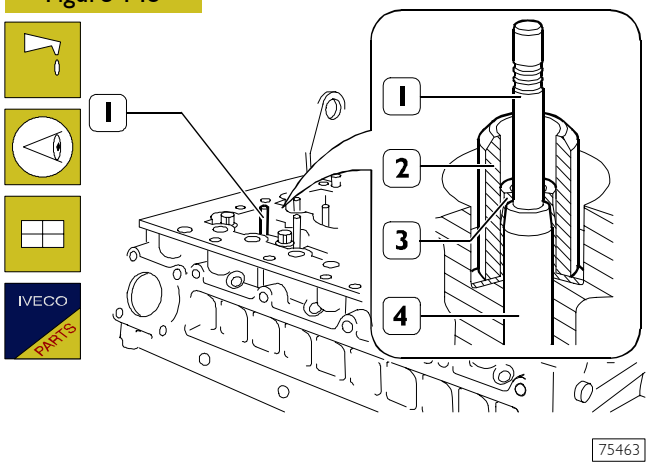

Lubricate the stem of the valves (1) and insert them into the associated valve guides (4) according to the position marked during removal. Using tool SP.2264 (2), mount the oil seals (3) on the valve guides (4).

Figure 149

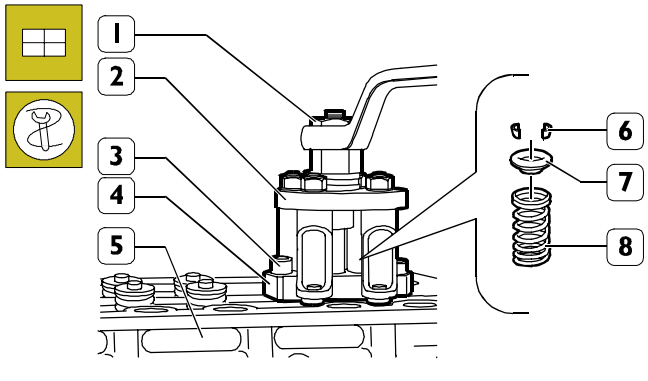

Position the springs (8) and plates (7) on the cylinder head (5).

Fit the part (4) of tool 99360260 onto the cylinder head (5) and secure it with the screws (3).

Fit the part (2) of tool 99360260 onto part (4), screw down the nut (1) so that by compressing the springs (8) it is possible to insert the retaining cotters (6); then unscrew the nut (1) checking that the cotters (6) have settled in correctly.

Repeat these operations on the remaining valves.

Figure 150

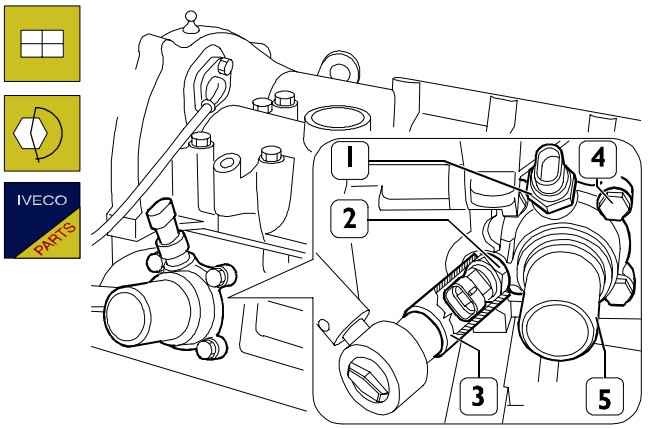

75464

Fit the thermostat casing (5) with a new seal and tighten the fixing screws (4) to the prescribed torque.

Mount the temperature sensors (1 and 2) and, using the wrench SP.2263 (3), tighten them to the prescribed torque.

Fit the brackets for lifting the engine and tighten the fixing screws to the prescribed torque.

540650 Overhead

Overhead removal

Figure 151

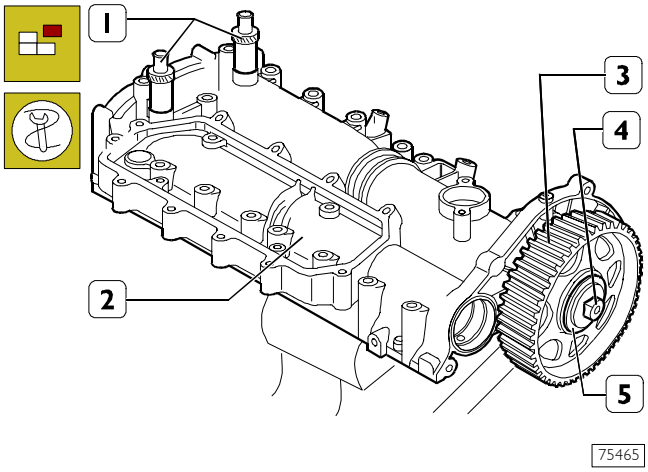

75465

Position the overhead (2) together with the pins 99360614 (1) on the mounting SP. 2271.

Take out the screw (4) with the washer (5) beneath fastening the toothed pulley (3).

Figure 152

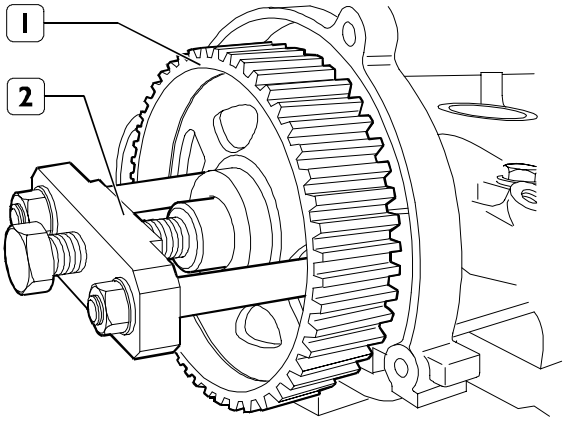

75466

Using the extractor 99340028 (2) extract the toothed pulley (1) driving the camshaft.

Figure 153

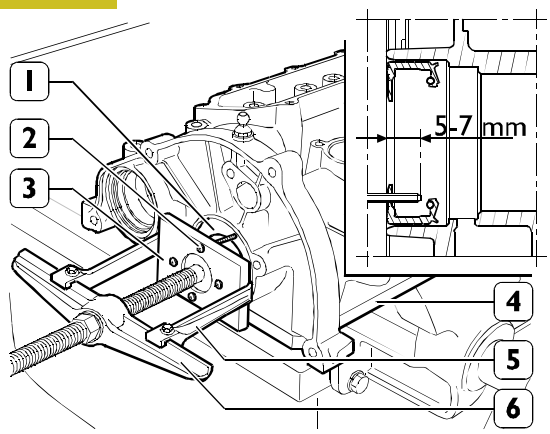

75467

Using four self-tapping screws (2), apply the tool SP. 2325 (3) to the seal (1) and with the extractor (5 and 6) remove the seal (1) from the overhead (4).

The screws (2) must be screwed down so they get positioned at the dimension shown in the figure.

Figure 154

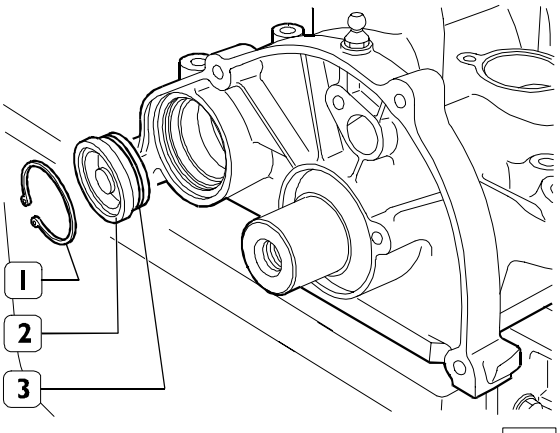

75468

Remove the circlip (1) and take off the cover (2) together with the seal (3).

Figure 155

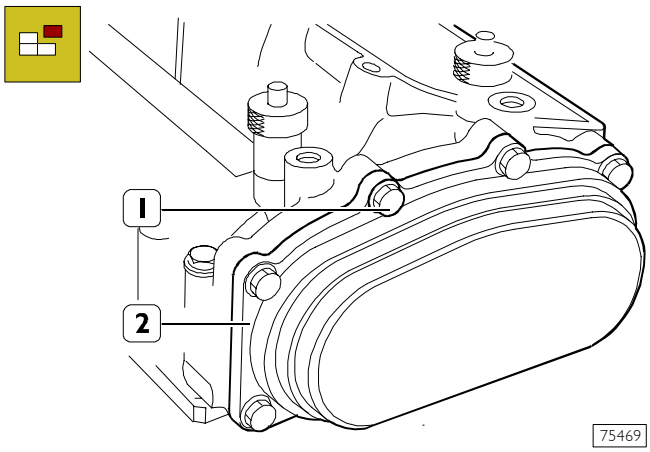

Take out the screws (1) and remove the rear cover (2) together with its gasket.

Figure 156

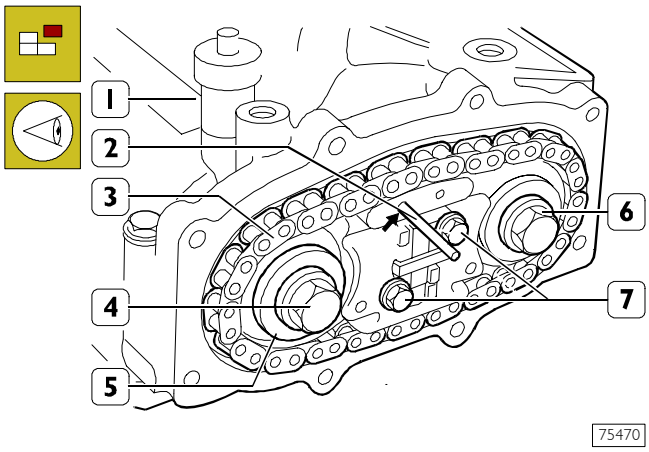

Insert a suitable pin (2) in the hole (⇒) of the chain drive (3).
Take out the screws (4) and (6) with their washers (5) for fixing gears to the camshafts.
Take out the screws (7) and remove the chain drive (3) from the overhead (1).

Figure 157

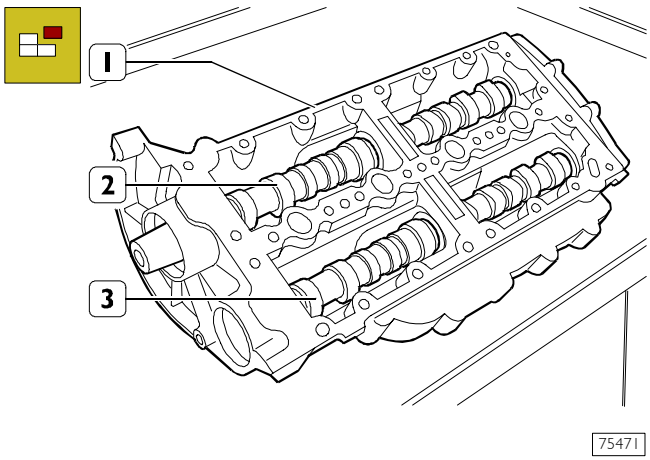

Turn over the overhead (1) and, taking care not to damage the seats, extract the camshafts (2) and (3) from it.

5412 TIMING SYSTEM

Figure 158

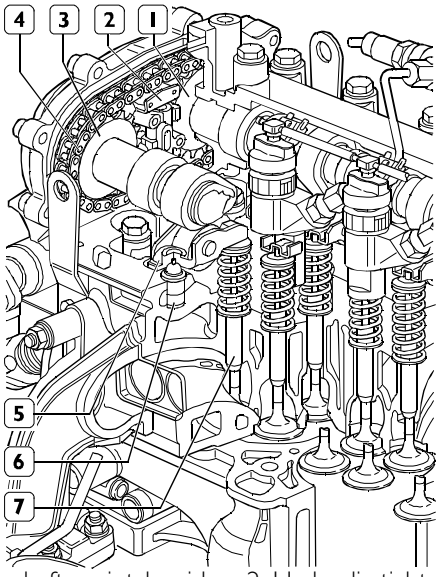

1. Camshaft on intake side – 2. Hydraulic tightener – 3. Camshaft on exhaust side – 4. MORSE chain – 5. Rocker arms – 6. Hydraulic reacting tappet – 7. Valve assembly.

Description

The timing system is the type with a twin camshaft in the head and four valves per cylinder with hydraulic tappets.
Motion is transmitted by the crankshaft, via a toothed belt, to the gear keyed onto the intake valve drive shaft. The drive transmission of the exhaust valve drive shaft takes place via a MORSE-type chain kept under tension by a hydraulic tightener.
The toothed belt, moreover, drives the water pump and the high-pressure pump CP3 and is kept at the right tension by an automatic tightener roller.
The four valves move by the action of the "free" rocker arms (with no supporting shaft).
The rocker arms, one per valve, are always in contact with the corresponding cam and are kept in this position by a hydraulic reacting tappet, thereby eliminating the need for periodical adjustment.

Figure 159

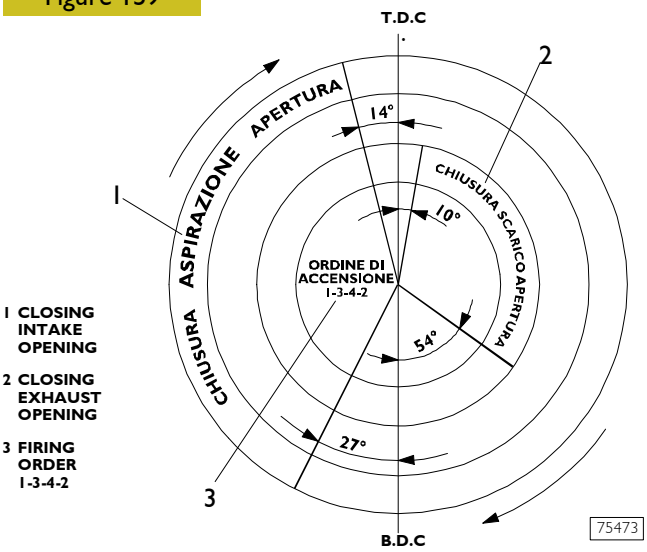

TIMING SYSTEM DIAGRAM

541210 Camshaft Checks

The surfaces of the shaft supporting pins and of the cams must be finely honed; if there is any sign of meshing or scoring, replace the shaft.

Figure 160

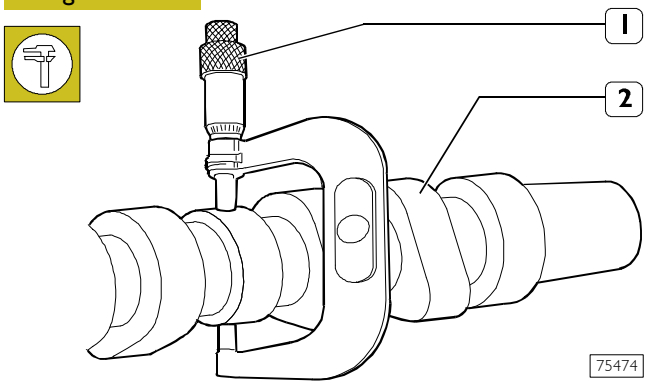

Using a micrometer (1), measure the diameter of the pins (2) of the camshaft and, using a bore meter, measure the diameter of the supporting seats in the overhead.
The difference between these two measurements gives the existing clearance.
The nominal assembly clearance is 0.037 ÷ 0.088 mm.

541211 Checking cam lift and pin alignment

Figure 161

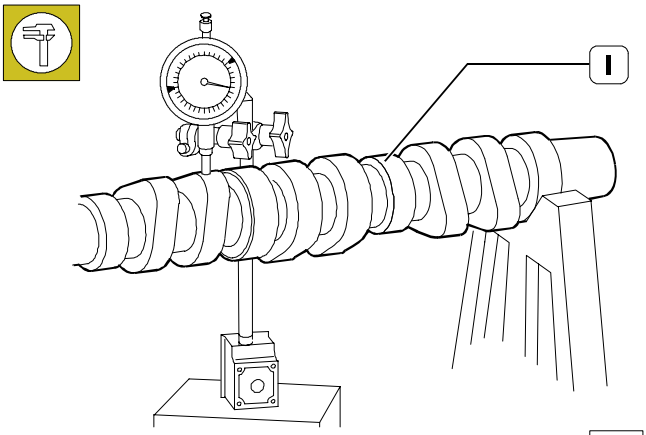

Set the shaft (1) on tailstocks and, using a dial gauge on the middle mounting, check that the alignment error is no greater than 0.04 mm; replace the shaft if it is. In addition, check the cam lift: it must be as prescribed; replace the shaft if it is any different.

Figure 162

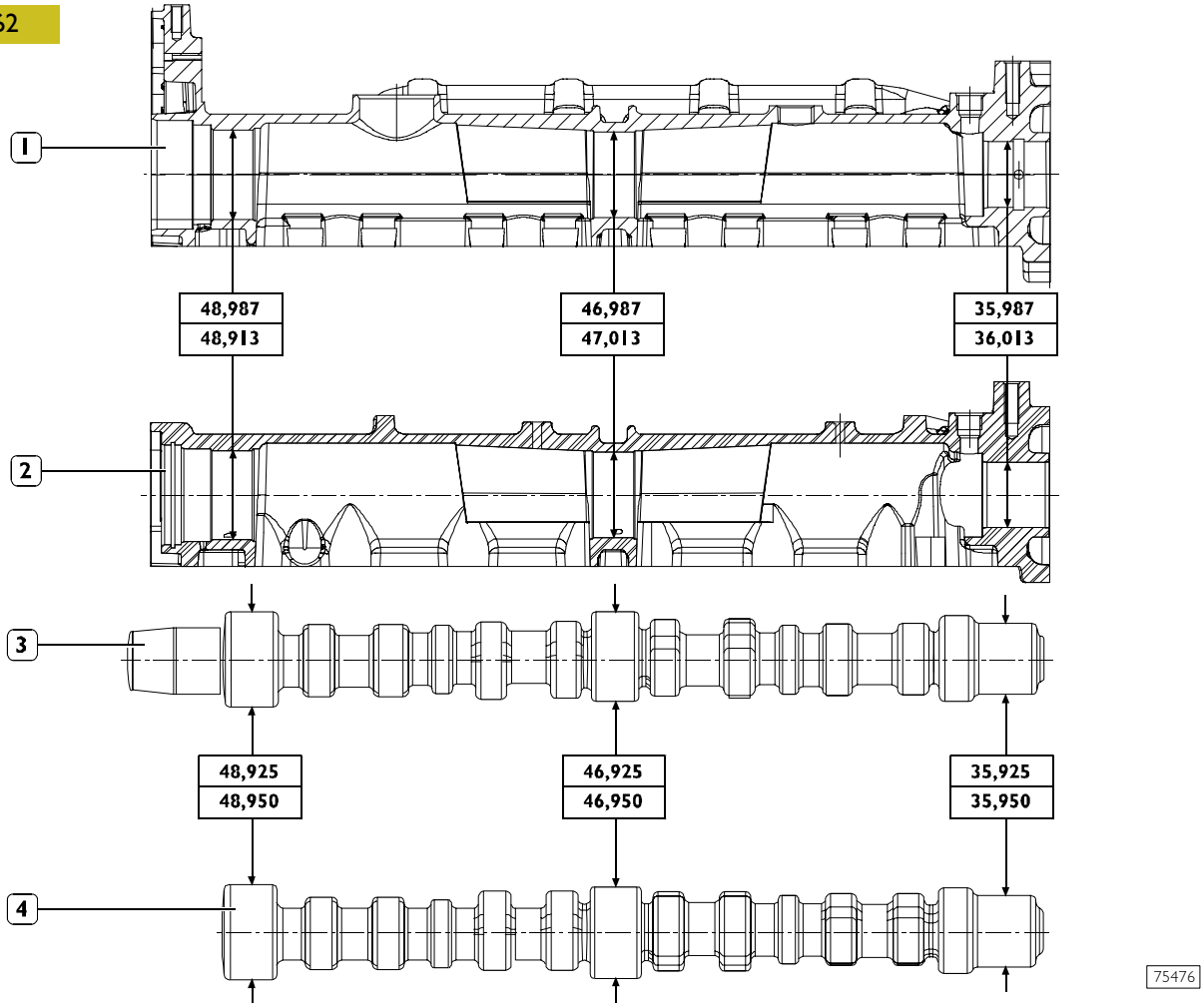

MAIN DATA, CAMSHAFT PINS AND SEATS

1. Intake valve camshaft seats – 2. Exhaust valve camshaft seats – 3. Intake valve camshaft – 4. Exhaust valve camshaft.

Fitting overhead

Figure 163

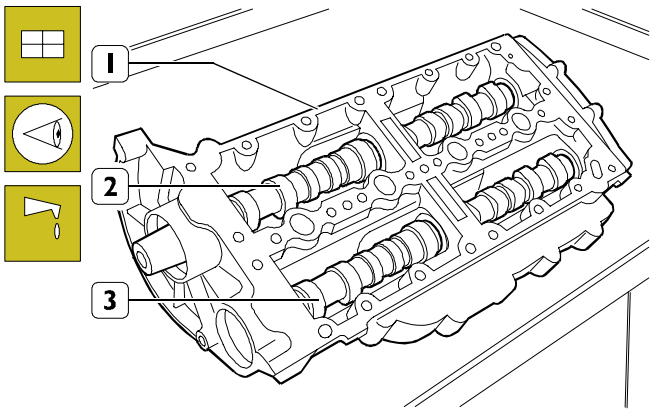

Lubricate the supporting pins of the shafts (2 and 3) and fit them in the overhead (1).

In this operation, take care not to damage the overhead supporting seats.

Figure 164

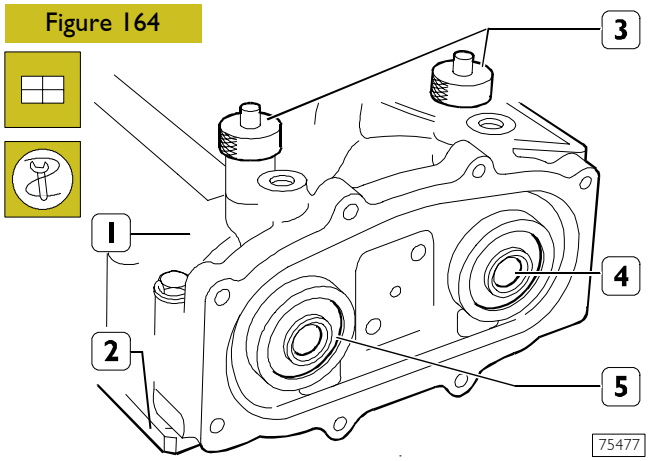

Position the overhead (1) and secure it on the mounting SP.2271 (2).
Position the camshafts (4 and 5) so as to be able to insert the pins 99360614 (3) into their radial holes through the threaded holes of the overhead.

Figure 165

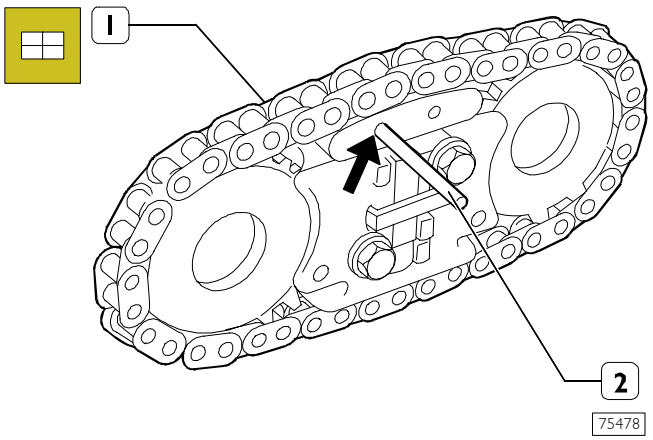

Compress the tightener so as to be able to insert a suitable pin (2) into the hole (→) of the chain drive (1).

Figure 166

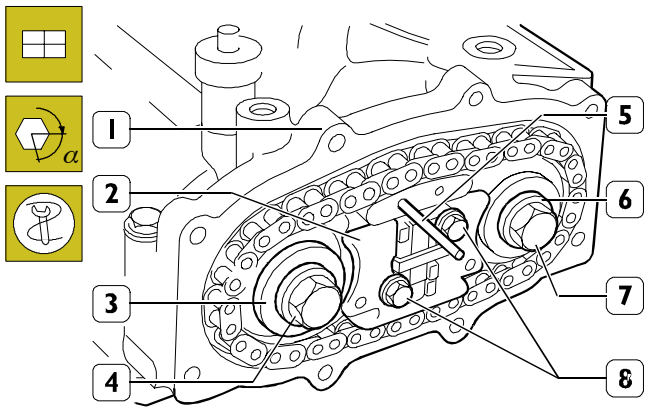

Fit the chain drive (2) on the camshafts and secure it to the overhead (1) tightening the screws (8) to the prescribed torque.

Screw down the screws (4) and (7) with the washers (5) and (6) and tighten them as follows:

- ❑ Tighten the screw (7) to a torque of 50 Nm.
- ❑ Close further with an angle of 60°.
- ❑ Take out the pin (5).
- ❑ Tighten the screw (4) to a torque of 50 Nm.
- ❑ Close further with an angle of 60°.

Use the goniometer 99395216 for the angle closing.

Figure 167

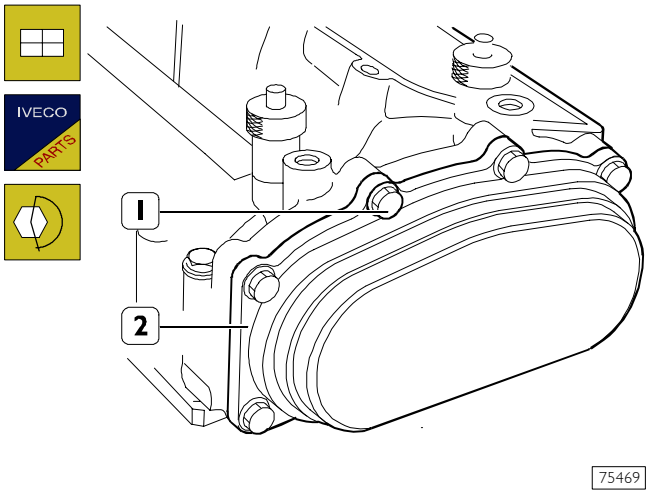

Fit on the rear cover (2) with a new gasket and tighten the fixing screws (1) to the prescribed torque.

Figure 168

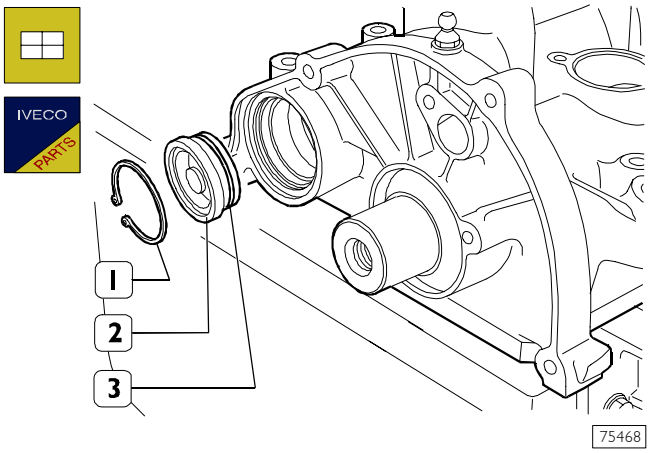

Fit a new seal (3) on the cover (2) and fit this in the overhead.

Fit on the seal (1).

Figure 169

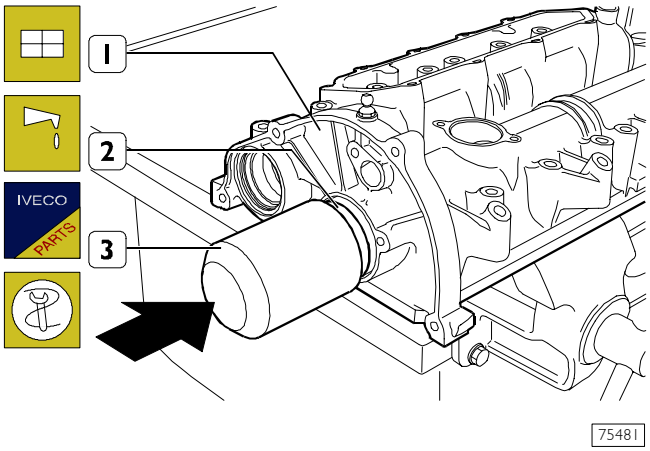

Lubricate the shank of the camshaft.

Using the keying device 99374458 (3), fit the seal (2) in the overhead (1).

Figure 170

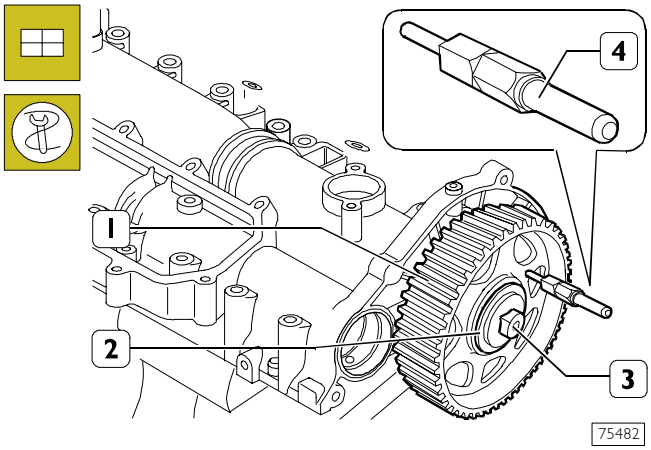

Fit the toothed pulley (1) onto the camshaft so as to align the hole of the pulley with that of the overhead and insert the tool 99360608 (4) into these holes. Screw down the screw (3) together with the washer (2) without tightening fully.

The toothed pulley (1, Figure 170) is not locked on the shaft since it must be able to turn when fitting and tensioning the timing belt. For the same reason, keep the tools 99360608 (4, Figure 170) and 99360614 (3, Figure 164) fitted.

Figure 171

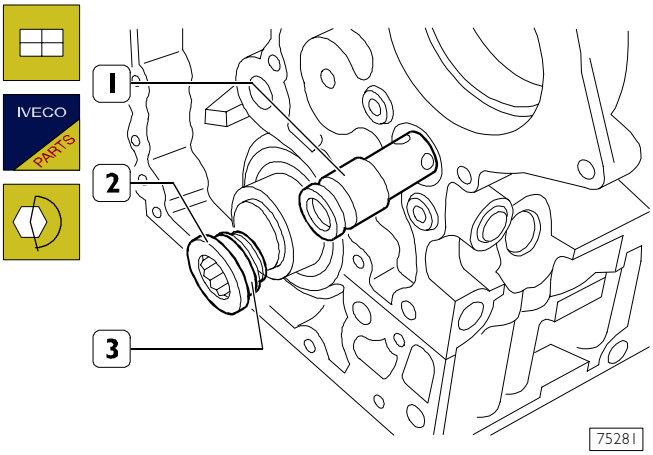

Fit the oil pressure control valve (1) in the crankcase.

Fit on the plug (2) with the seal (3) and tighten it to the prescribed torque.

Figure 172

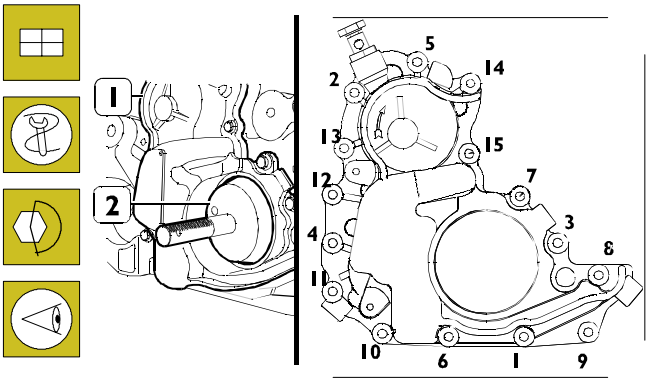

Fit the centring tool 99396037 (2) onto the shank of the crankshaft.

Mount the oil vacuum pump assembly (1) with a new gasket and tighten the screws (1-15) according to the following procedures:

- ❑ Tighten the screws from no. 1 to no. 6 to a torque of 5 ±1 Nm while checking that the tool 99360037 (2) turns freely.
- ❑ Tighten the screws from no. 7 to no. 15 to a torque of 10 ±1 Nm.
- ❑ Tighten the screws from no. 1 to no. 6 to a torque of 10 ±1 Nm.
- ❑ After checking that tool 99360037 (2) turns freely, remove it.

Figure 173

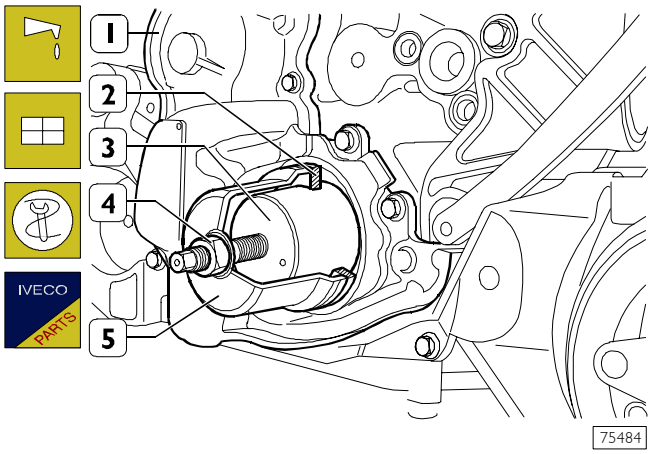

Lubricate the shank of the crankshaft.

Screw down part (3) of tool 99346254 in the crankshaft and place the seal (2) on the part (3).

Key part (5) of tool 99346254 onto part (3), screw down the nut (4) until the seal (2) gets into position in the seat of the oil vacuum pump assembly (1).

Take out the tool 99346254 (3, 4 and 5).

Figure 174

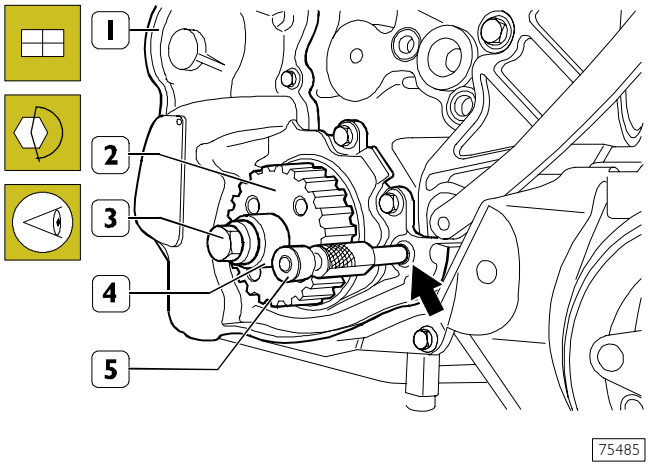

Turn the crankshaft so as to be able to insert tool 99360615 (5) into the hole in the crank of the crankshaft, through the hole in the oil vacuum pump assembly (1), to block crankshaft rotation.

Mount the gear (2), screw down the screw (3) together with the spacer (4) and tighten it to the prescribed torque.

Do not remove the tool 99360615 (5) as it will be needed for fitting the timing drive belt.

Figure 175

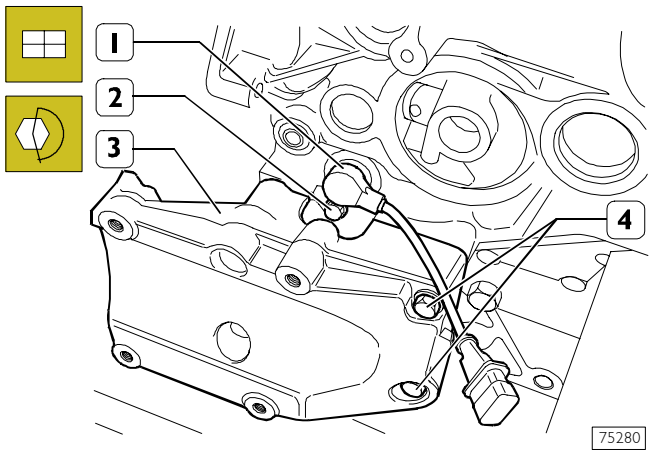

Mount the speed sensor (1) with a fresh gasket and tighten the fixing screw (2) to the prescribed torque (if applicable).

Fit on the compressor mounting (3) and tighten the fixing screws (4) to the prescribed torque.

Figure 176

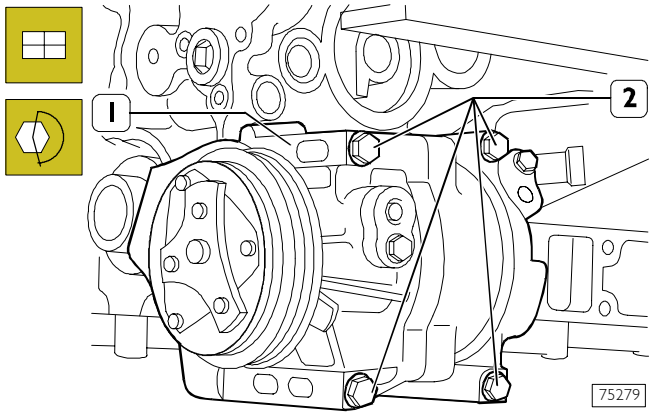

Mount the air-conditioner compressor (1) (if applicable) and tighten its fixing (2) screws to the prescribed torque.

Figure 177

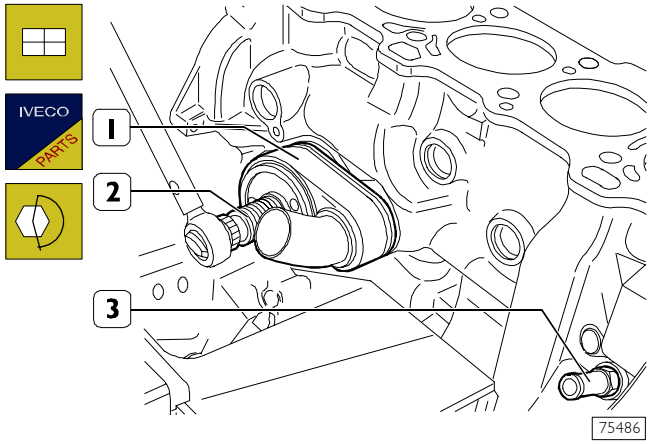

Mount the oil pressure transmitter (3) with a fresh gasket.

Mount the heat exchanger (1) with a fresh seal and tighten the coupling (2) to the prescribed torque.

Figure 178

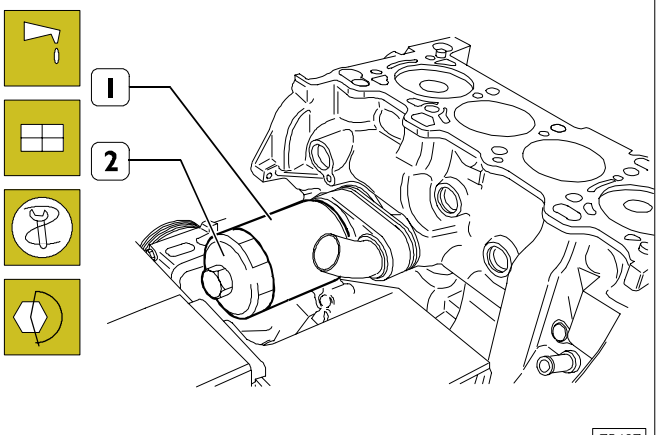

Lubricate the seal of the oil filter (1) with engine oil.
Using tool 99360076 (2), tighten the oil filter to the prescribed torque.

Figure 179

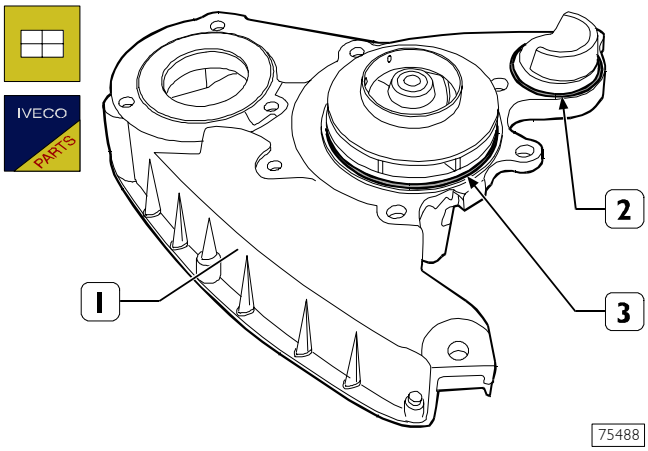

Thoroughly clean the mating surface (à) of the water pump (1) and position fresh seals (2 and 3) on it.

Figure 180

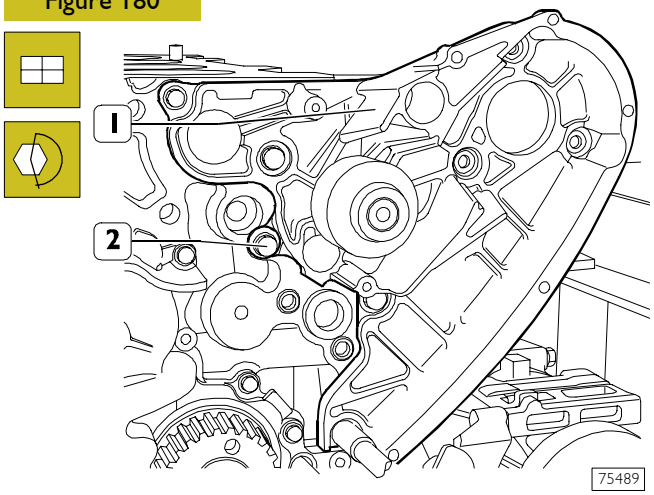

Mount the water pump (1) and tighten the fixing screws (2) to the prescribed torque.

Figure 181

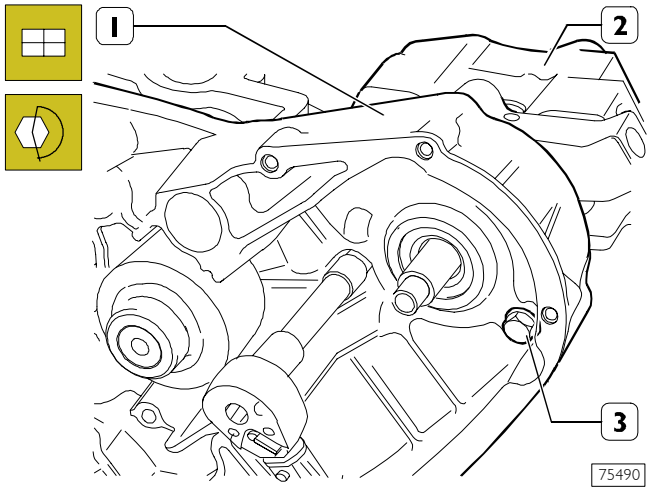

Fit the high-pressure pump (2) onto the flange of the water pump (1) and tighten the fixing screws (3) to the prescribed torque.

Figure 182

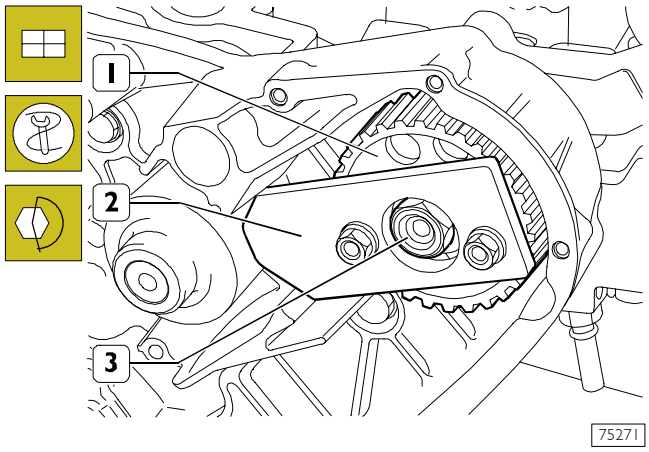

Fit the driving gear (1) onto the shaft of the high-pressure pump and block rotation of this shaft by applying tool SP.2263 (2) as illustrated in the figure. Tighten the nut (3) to the prescribed torque and remove the tool (2).

Refitting cylinder head

Figure 183

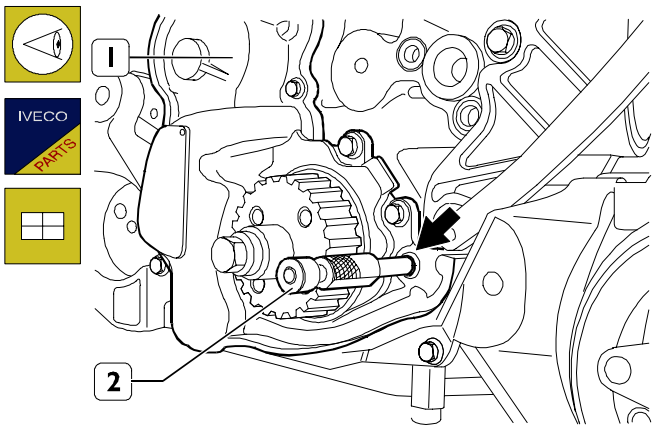

Check that tool 99360619 (2) inserted in the hole (à) of the oil vacuum pump assembly (1) blocks crankshaft rotation.

This condition is necessary for setting up the timing system and to prevent the valves interfering with the pistons.

Figure 184

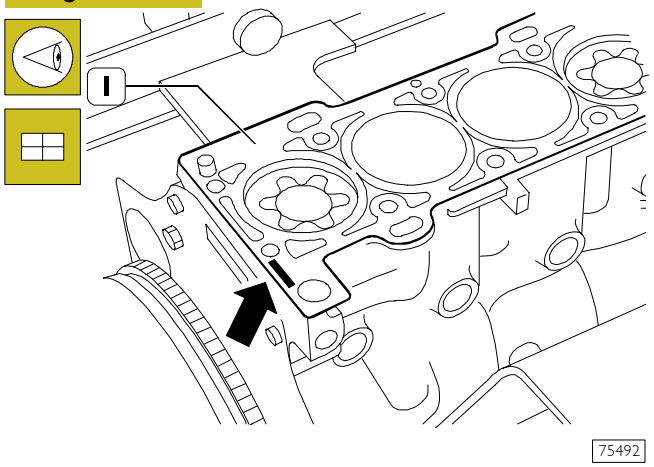

Check that the mating surfaces of the cylinder head and crankcase are clean.
Keep the cylinder head gasket clean.
Position the cylinder head gasket (1) of the thickness determined under the heading "checking piston protrusion" with the lettering "TOP" facing the cylinder head.

It is essential to keep the gasket sealed in its package until just before assembly.

Figure 185

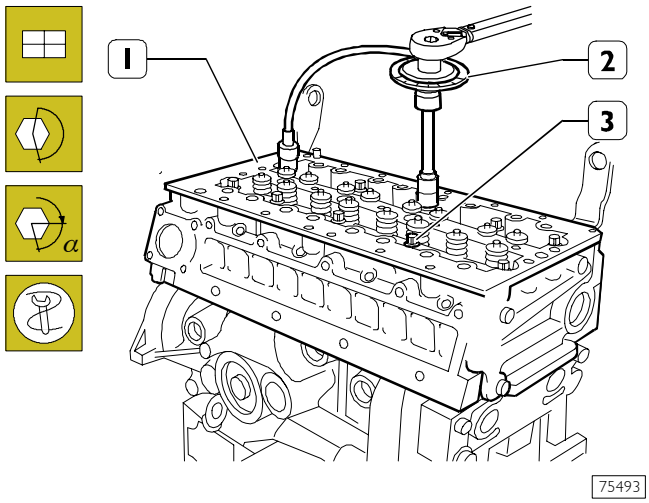

Mount the cylinder head (1).

Screw down the fixing screws (3) and tighten them, in three successive stages, following the order and methods shown in the following figure.

The angle closure is done with tool 99395216 (2).

Figure 186

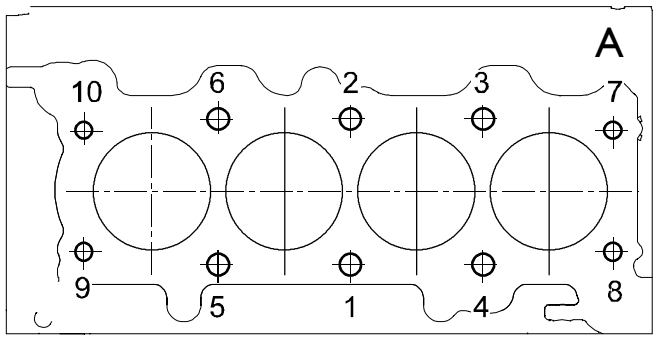

Diagram of the tightening sequence for the cylinder head fixing screws:

- 1st phase: pre-tightening with torque wrench
  - screws 1-2-3-4-5-6 to a torque of 100 ±5 Nm;
  - screws 7-8-9-10 to a torque of 50 ±2.5 Nm.
- 2nd phase: angle closing
  - screws 1-2-3-4-5-6 90° ±5°;
  - screws 7-8-9-10 60° ±3°.
- 3rd phase: angle closing
  - screws 1-2-3-4-5-6 90° ±5°;
  - screws 7-8-9-10 60° ±3°.

A = flywheel side.

Figure 187

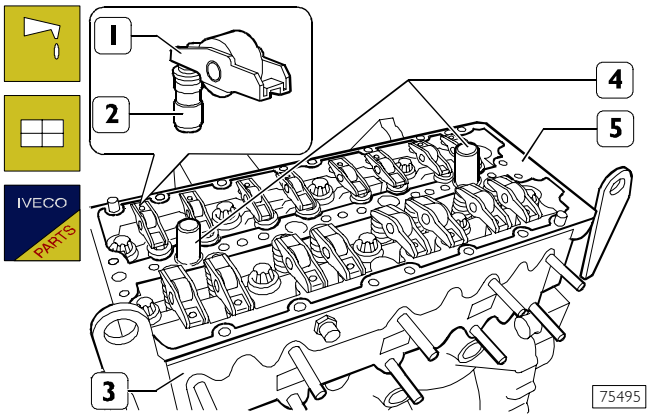

Thoroughly clean the hydraulic tappets (2), lubricate them and fit them in the cylinder head (3), positioning the rocker arms (1) on the valves correctly.
Fit on the gasket (5).
Insert the two tools SP. 2264 (4) into the electro-injector seats for subsequent centring of the overhead on the cylinder head.

Figure 188

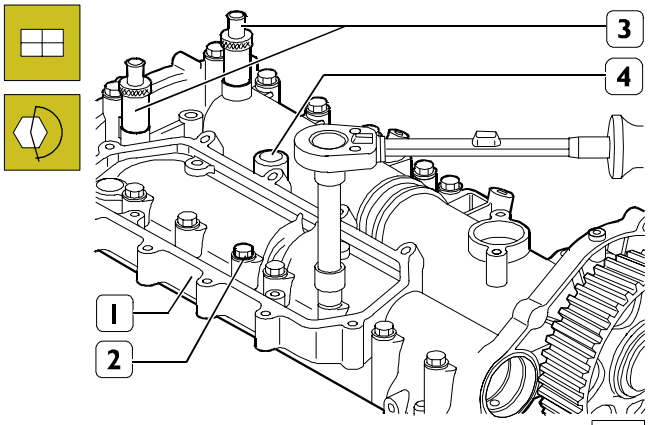

Mount the overhead (1) together with the tools 99360614 (3) for the timing and tighten the fixing screws (2) to the prescribed torque.

Take out the tools SP. 2266 (4).

Figure 189

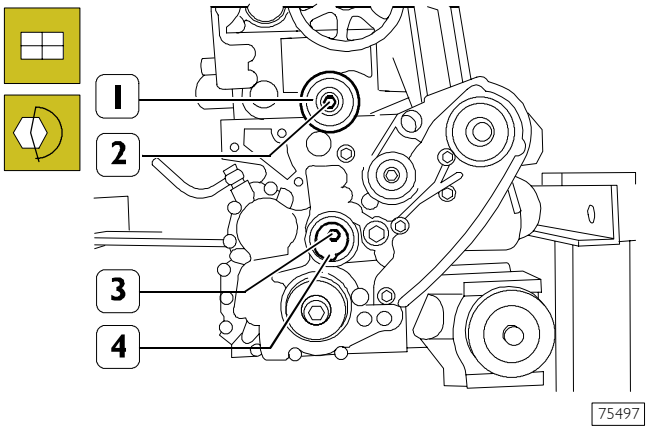

Mount the fixed tightener (1) and tighten the fixing screw (2) to the prescribed torque.

Mount the automatic tightener (4) without fully tightening the fixing screw (3), max. closing torque 5 Nm.

Figure 190

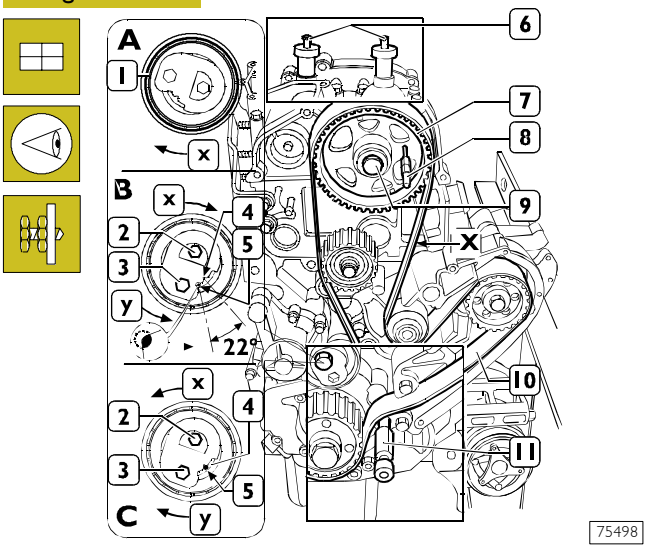

X = Direction of movement of the tightener – Y = Direction of rotation of the key.

Turn the automatic tightener (1) clockwise, positioning it as shown in frame A.
Mount the toothed belt (10).

The toothed belt must never get bent. On the back of the toothed belt there are arrows showing its assembly on the engine and they must correspond to its direction of rotation. In addition, to be able to fit the toothed belt (10) onto the toothed pulley (7), it is necessary to remove the tool 99360608 (8) and turn the toothed pulley (7) clockwise by no more than half a tooth of the pulley. If the engine has run for a period equivalent to = 40,000 km, the toothed belt must be replaced with a fresh one, no matter what its state of wear.

On completing assembly, adjust the toothed pulley (7) to put the section X of the belt under tension and tighten the screw (9) to a torque of 90 Nm. Keeping the screw (2) stationary and using a suitable wrench on the hexagon of the plate (3) of the tightener, turn it anticlockwise to cover the reference hole (5) located on the fixed portion of the tightener (see frame B). In the above conditions, tighten the fixing screw (2) to a torque of 30 ± 4 Nm. Remove the tools 99360614 (6) and 99360615 (11) for the timing. Turn the engine in its direction of rotation by 8 turns to be able to put the tools (6) and (11) back in to do the timing.

Do not turn the engine in the opposite direction; if, on turning the engine, you pass the point for inserting the tools (6) and (11), turn the engine clockwise by another two turns.

See frame C: Figure 190, holding the tightener plate (3) stationary with the wrench inserted in its hexagon, loosen the fixing screw (2). Keeping the fixing screw (2) stationary, turn the plate (3) clockwise until its reference mark (4) coincides with the reference hole (5) of the fixed portion of the tightener. In the above conditions, tighten the screw (2) to a torque of 30 ±4 Nm.

See frame C: Figure 190, holding the tightener plate (3) stationary with the wrench inserted in its hexagon, loosen the fixing screw (2). Keeping the fixing screw (2) stationary, turn the plate (3) clockwise until its reference mark (4) coincides with the reference hole (5) of the fixed portion of the tightener. In the above conditions, tighten the screw (2) to a torque of 36 ±4 Nm.
After assembly, the belt (10) tension measured using tool 99395849 must be as follows in the following points: X = 212 ± 12 Hz -X_1 = 178 ± 10 Hz.

Figure 191

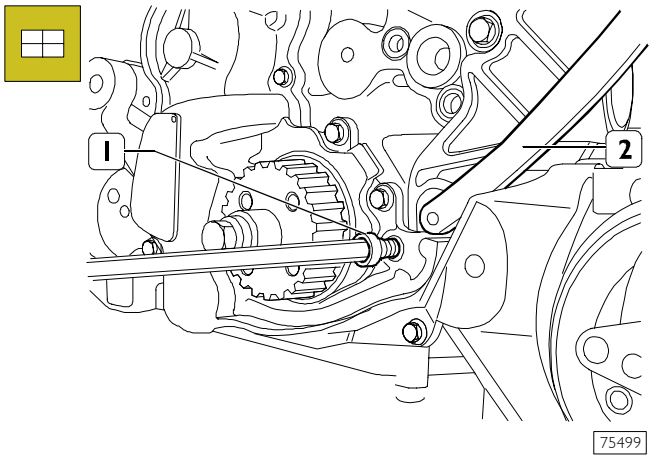

Remove the tools (6 and 11, Figure 190).

Screw the plug (1) into the oil-vacuum pump mounting (2) and the plugs on the holes of the overhead.

Figure 192

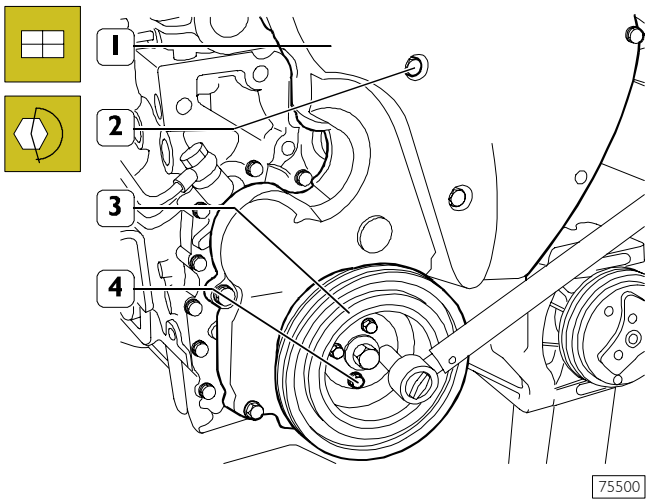

Mount the timing cover (1) and tighten the screws (2) to the prescribed torque.

Mount the damper pulley (3) and tighten the screws (4) to the prescribed torque.

Figure 193

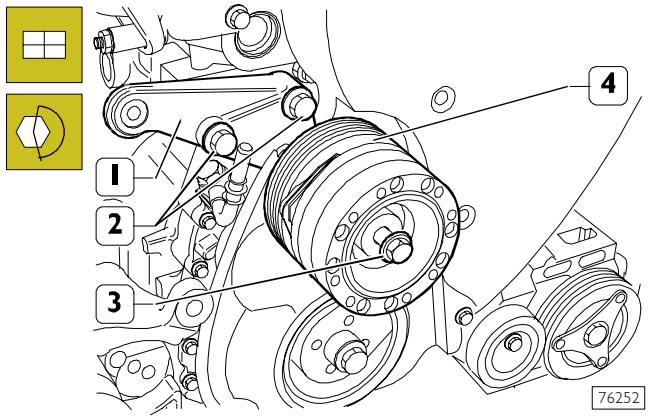

Fit on the mounting (1) together with the electromagnetic coupling (4) and tighten the fixing screws (2 and 3) to the prescribed torque.

Figure 194

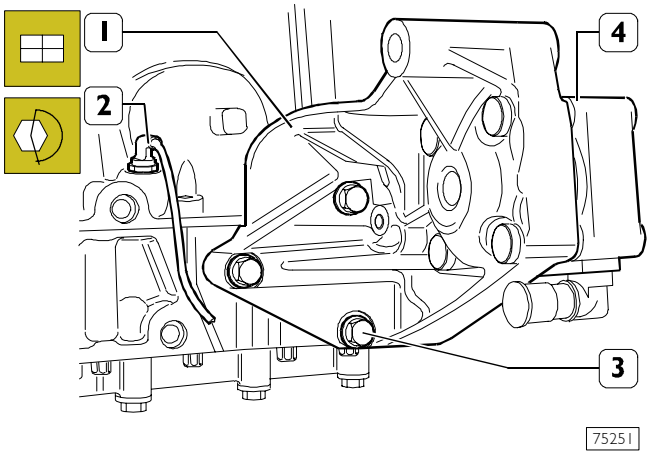

Mount the oil level sensor (1).

Fit on the power steering (2) pump mounting (4) and tighten the fixing screws (3) to the prescribed torque.

Figure 195

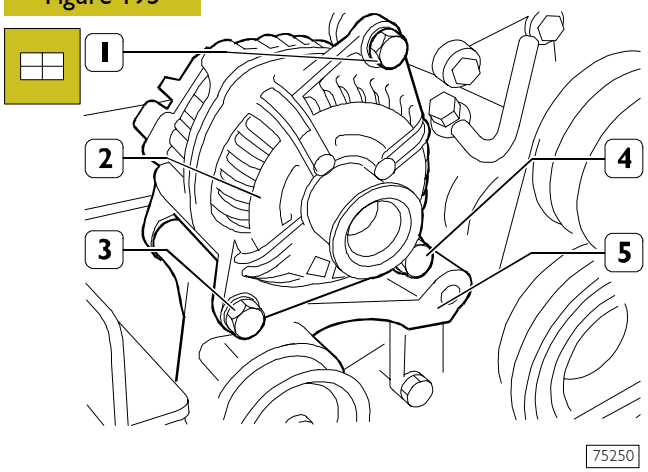

Position the alternator (2) on the mounting (5) and secure it with the bottom screws (3 and 4) and the bolt.

Figure 196

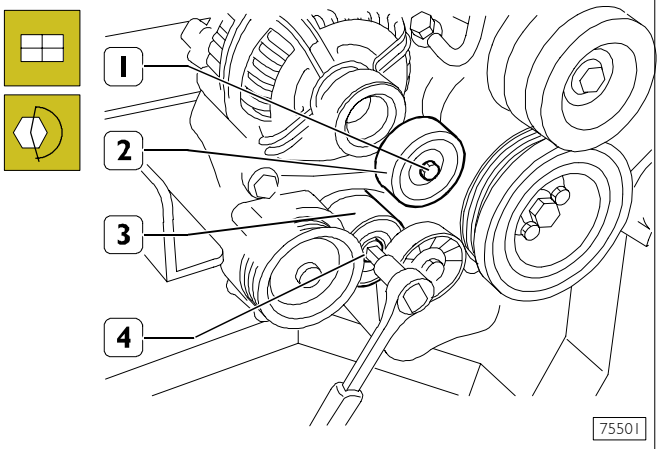

Mount the fixed tightener (2) and tighten the fixing screw (1).

Mount the automatic tightener (3) and tighten the screw (4) to the prescribed torque.

Figure 197

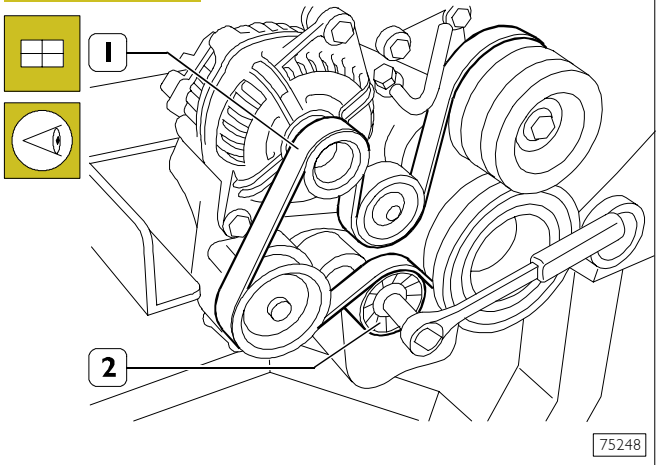

Using a wrench on the automatic tightener (2), mount the drive belt (1), taking care to position its ribs correctly in the respective races of the pulleys.

544035 Adjusting air-conditioner – compressor drive belt tension

Figure 198

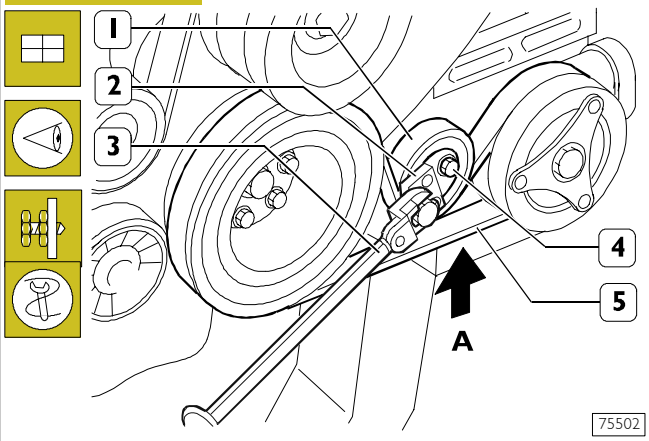

Fit the tightener (1) without tightening the screw (4).
Fit the drive belt (5) taking care to position its ribs correctly in the respective races of the pulleys.

With tool SP. 2341 (2) inserted in the holes of the tightener (1) and torque wrench (3), turn the tightener (1) with a torque of 8.2 – 10 Nm; in this condition, tighten the screw (4) to a torque of 25 Nm.

Turn the engine in its direction of rotation to have the belt (5) make two full turns.

With appliance 99395849, measure the tension of the belt (5) in section **A**, which must be 204 ±10 Hz corresponding to a load on the tightener of 1010 ± Nm.

Figure 199

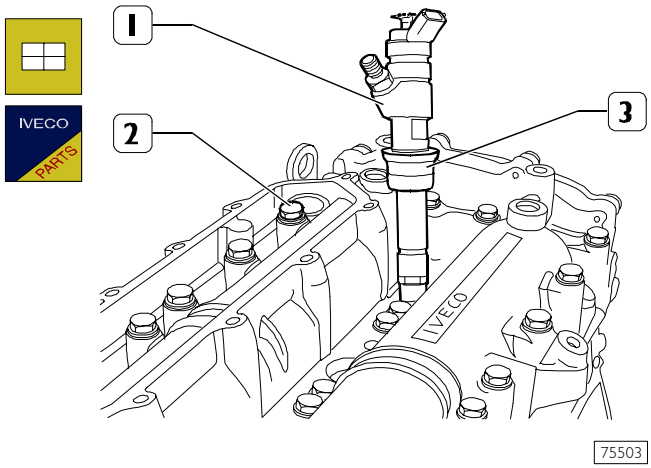

Fit a new seal (3) on the electro-injector (1) and mount this in the overhead (2).

Figure 200

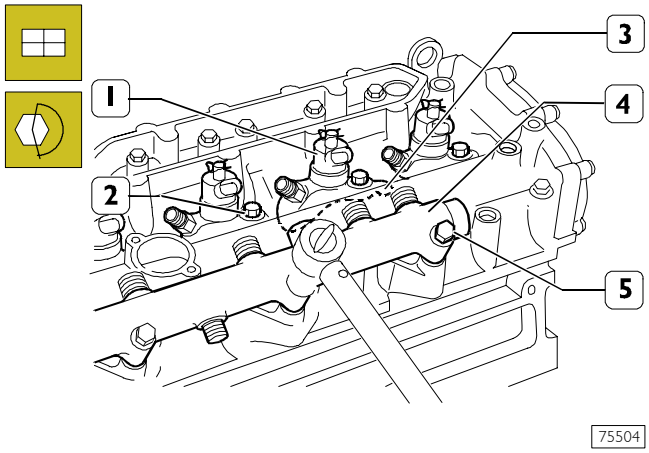

Mount the brackets (3) fastening the electro-injectors (1) and screw down the screws (2) without locking them.

Mount the hydraulic accumulator (4) and tighten the fixing screws to the prescribed torque.

Figure 201

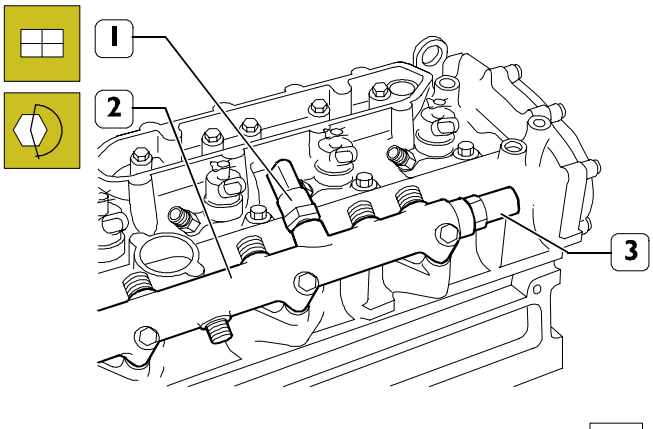

75505

On the hydraulic accumulator (2), mount: the pressure sensor (1), tightening it to a torque of 35 ±5 Nm, and the pressure relief valve (3), tightening it to a torque of 27 ± 2 Nm.

Figure 202

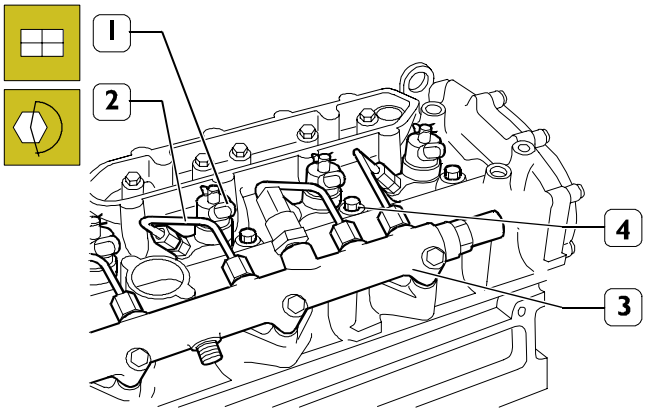

75506

Connect the fuel pipes (2) to the electro-injectors (1) and to the hydraulic accumulator (3).
Tighten the screws (4) fixing the electro-injector brackets to the prescribed torque.

Whenever they get removed, the fuel pipes must be replaced with new ones.

Figure 203

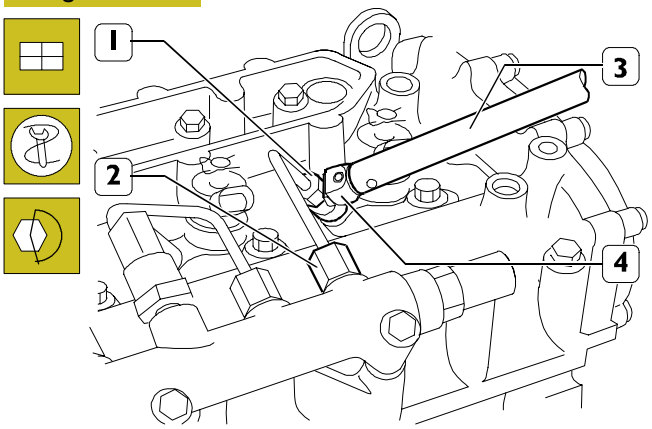

75507

Using the wrench (4) of the 99317915 series and the torque wrench 99389829 (3), tighten the fuel pipe fittings (1) and (2) to a torque of 20 Nm.

Figure 204

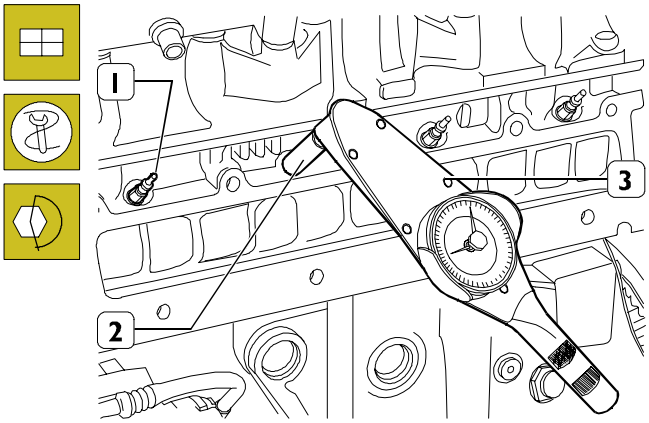

75508

Mount the glow plugs (1) and, using the box-type wrench SP. 2275 (2) and torque wrench 99389819 (3), tighten them to a torque of 8 ÷ 10 Nm.

Figure 205

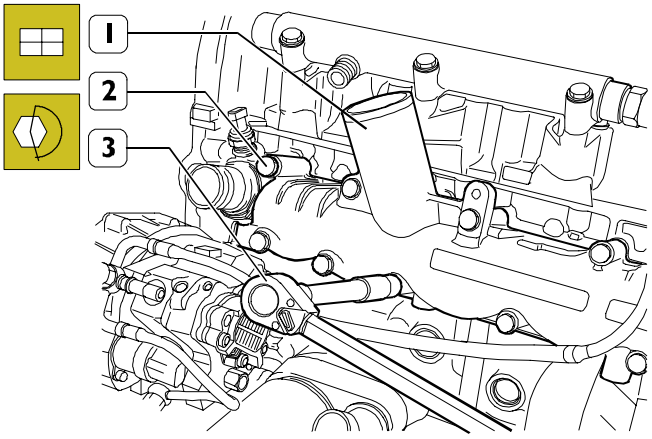

75509

Mount the intake manifold (1) with a new gasket and, using a torque wrench (3), tighten the fixing screws (2) to the prescribed torque.

Figure 206

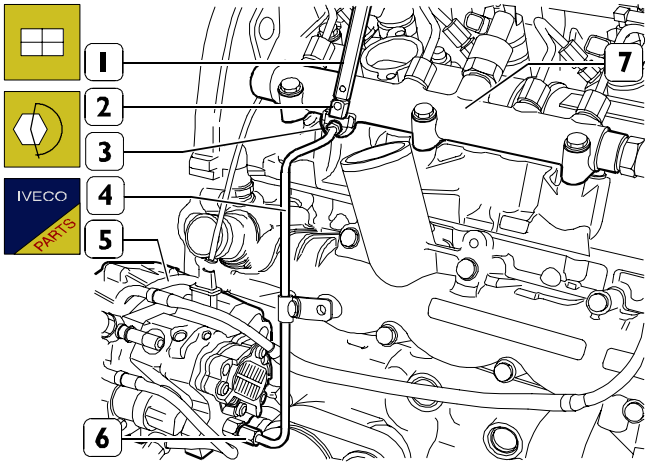

Connect the fuel pipe (4) to the hydraulic accumulator (7) and to the high-pressure pump (5).
Tighten the couplings (3 and 6) using a wrench (2) in the 99317915 series and the torque wrench 99389829 (1).

Whenever they get removed, the fuel pipes (4) must be replaced with new ones.

Figure 207

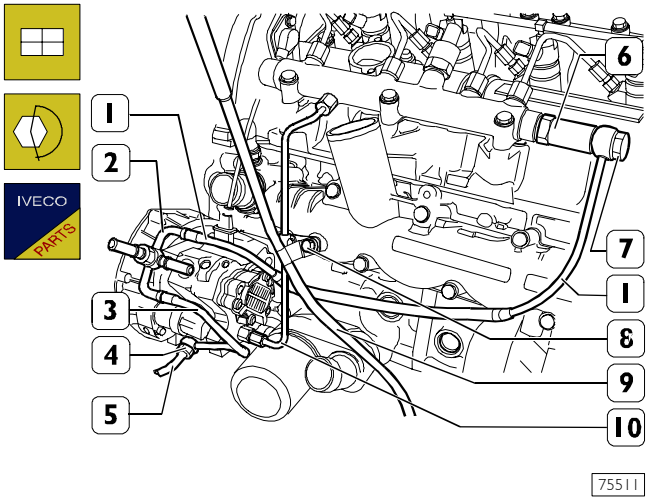

Connect the fuel recovery pipe (1) with new seals to the pressure relief valve (6) tightening the coupling (7) to the prescribed torque.
Connect the fuel recovery pipes (1) and (5) with new seals to the high-pressure pump (2) with the couplings (3) and (4).
Insert the oil dipstick tube (9) with a new seal into the crankcase and secure it together with the pipe (10), using the screw (8) tightened to the prescribed torque, to the intake manifold.

Figure 208

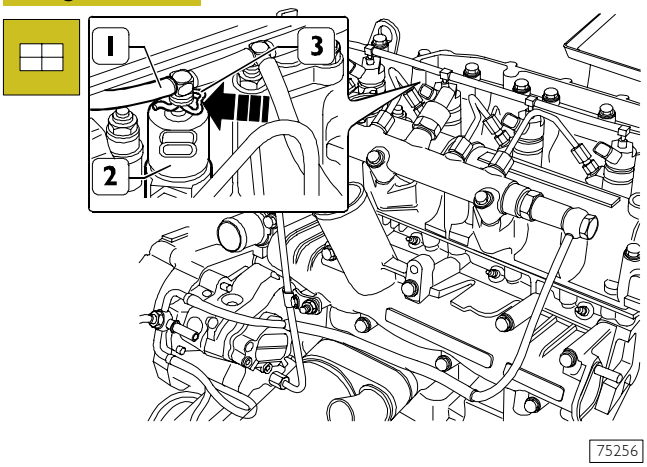

Press the clips (3) in the direction shown by the arrow and connect the fuel recovery pipe fittings (1) to the electro-injectors (2).

Figure 209

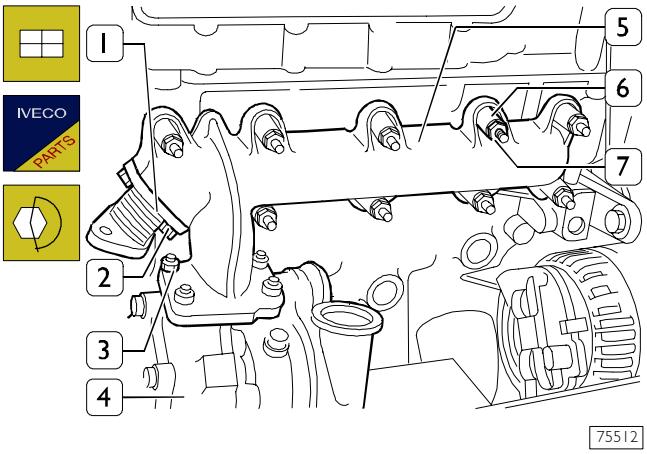

Fit the exhaust manifold (5) with a new gasket and the spacers (6) and tighten the nuts (7) to the prescribed torque.
On the exhaust manifold (6), mount: the turbocharger (4) with a new gasket and tighten the nuts (3) with washers to the prescribed torque, the compensator pipe (1) (if applicable) with a new seal and tighten the nuts (2) with washers to the prescribed torque.

Figure 210

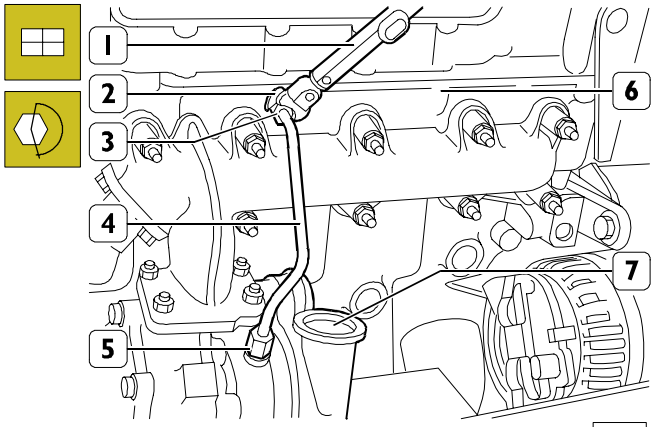

Connect the pipe (4) to the cylinder head (6) and to the turbocharger (7).
Using the wrench (2) in the 99317915 series and the torque wrench 99389829 (1), tighten the couplings (3 and 5) to the prescribed torque.

Figure 211

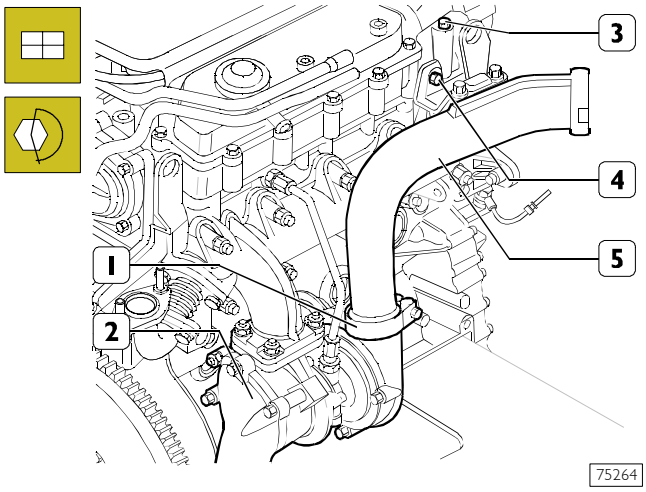

Connect the air duct (5) to the turbocharger (2) and to the overhead (3).
Tighten the clamp (1) and the screw (4) to the prescribed torque.

Figure 212

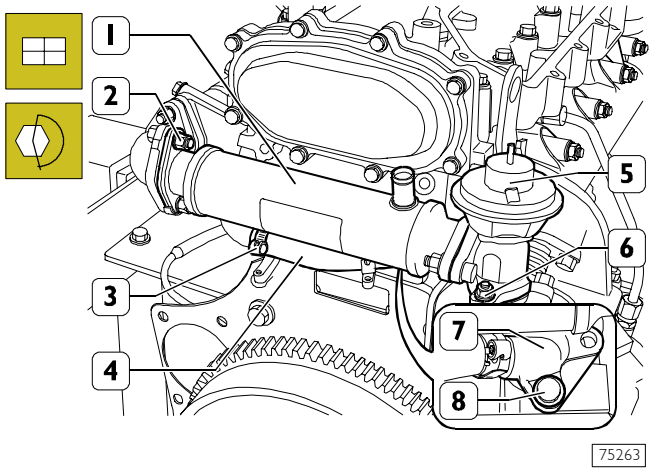

For engines with E.G.R. only

Mount the flange (7) with a new gasket and tighten the screws (8) to the prescribed torque.
Mount the heat exchanger (1) together with the E.G.R. valve (5) and new gaskets and tighten the screws (2 and 6) to the prescribed torque.
Connect the pipe (4) to the exchanger (1) and to the flange (7) securing it with the clamps (3).

Figure 213

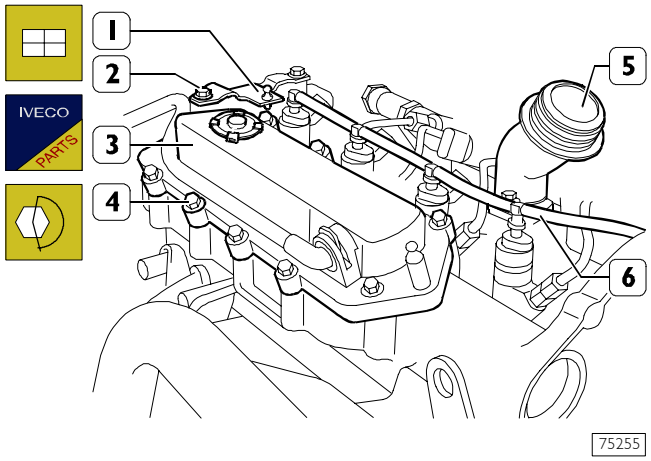

Mount the oil fillpipe (5) with a new seal and tighten the nuts (6) to the prescribed torque.
Mount the coalescence filter (3) and tighten its fixing nuts (4) to the prescribed torque.
Mount the bracket (1) and tighten the screws (2) to the prescribed torque.

Figure 214

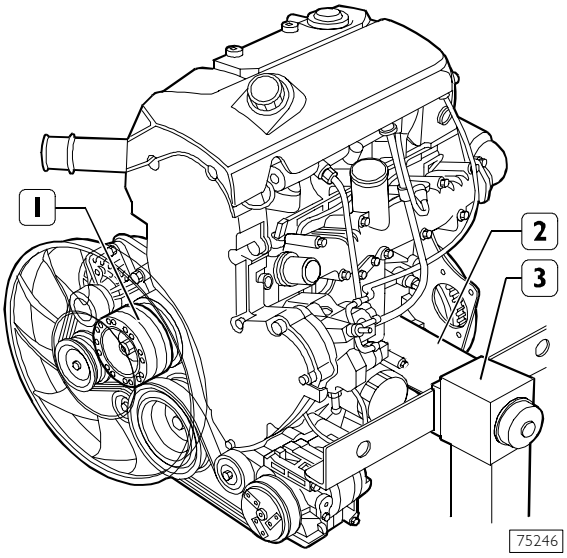

Fit the cooling fan (1) back onto the electromagnetic coupling. Fit the arm 99360549 onto the engine lifting hooks. Hook the arm onto the hoist and remove the engine from the rotary stand (3). Take out the brackets 99361028 (2).

Figure 215

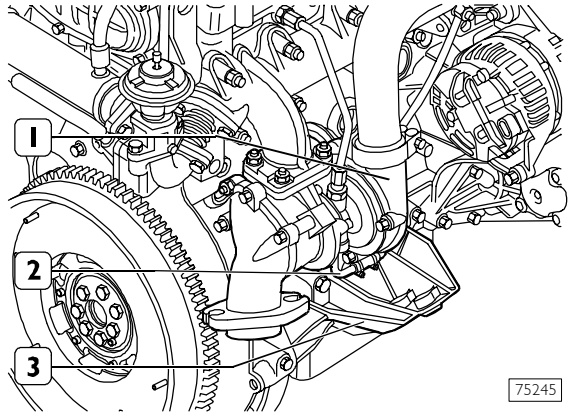

Complete engine assembly.
Fit on the left and right engine mountings (3) and tighten the fixing screws to the prescribed torque.
Connect the oil pipe (2) to the turbocharger (1) and to the crankcase and tighten the fixing screws and the coupling of the oil pipe (2) to the prescribed torque.
If applicable, mount the following parts:

- ❑ Engine cable, connecting its electrical connections to the thermostat temperature sensor, timing sensor, engine speed sensor, pressure regulator, rail pressure sensor and intake manifold air pressure/temperature sensor.
- ❑ Hydraulic accumulator guard.
- ❑ Top soundproofing cover.
- ❑ Add the prescribed grade and quantity of lubricating oil to the engine.

764264 Timing speed sensor
764266 Engine speed sensor

Figure 216

Cross-section A-A

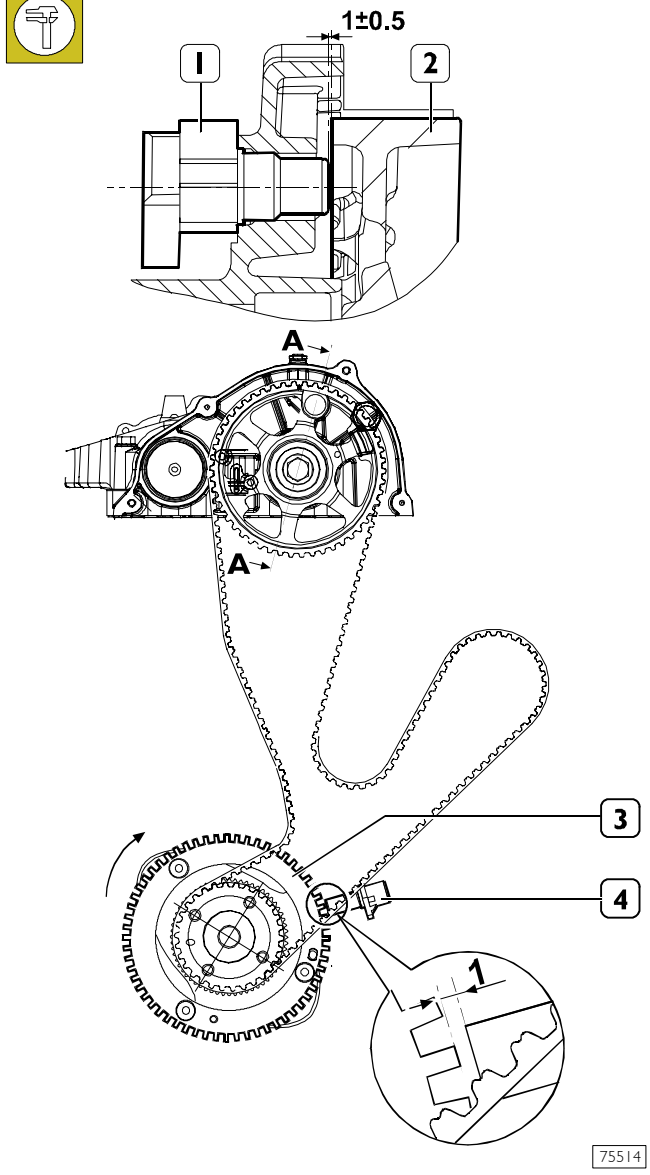

The sensor gap is:

- ❑ 1 ±0.5 mm, between the camshaft pulley (2) and timing sensor (1).
- ❑ 1 mm, between the phonic wheel (4) and speed sensor (3).

5450 LUBRICATION

General

The engine is lubricated by forced circulation performed by the following parts:

- An oil gear pump is incorporated in an assembly that also includes the vacuum pump (GPOD).
- A pressure control valve incorporated in the crankcase.
- A Modine-type heat exchanger with built-in safety valve.
- A double filtration oil filter with built-in safety valve.

Operation (see Figure 217)

Engine oil is drawn up from the sump by the oil pump (3) via the suction strainer (2) and delivered under pressure to the heat exchanger (5) where it is cooled.

The oil continues through the oil filter (6) and goes to lubricate the relevant parts through ducts or pipes.

At the end of the lubrication cycle, the oil returns to the sump by gravity. The oil filter can be excluded by the safety valve built into it if it gets clogged. The heat exchanger is also excluded by a safety valve if it gets clogged.

In addition, the lubrication oil supplies the hydraulic automatic tightener (7) of the camshaft drive (8).

Figure 217

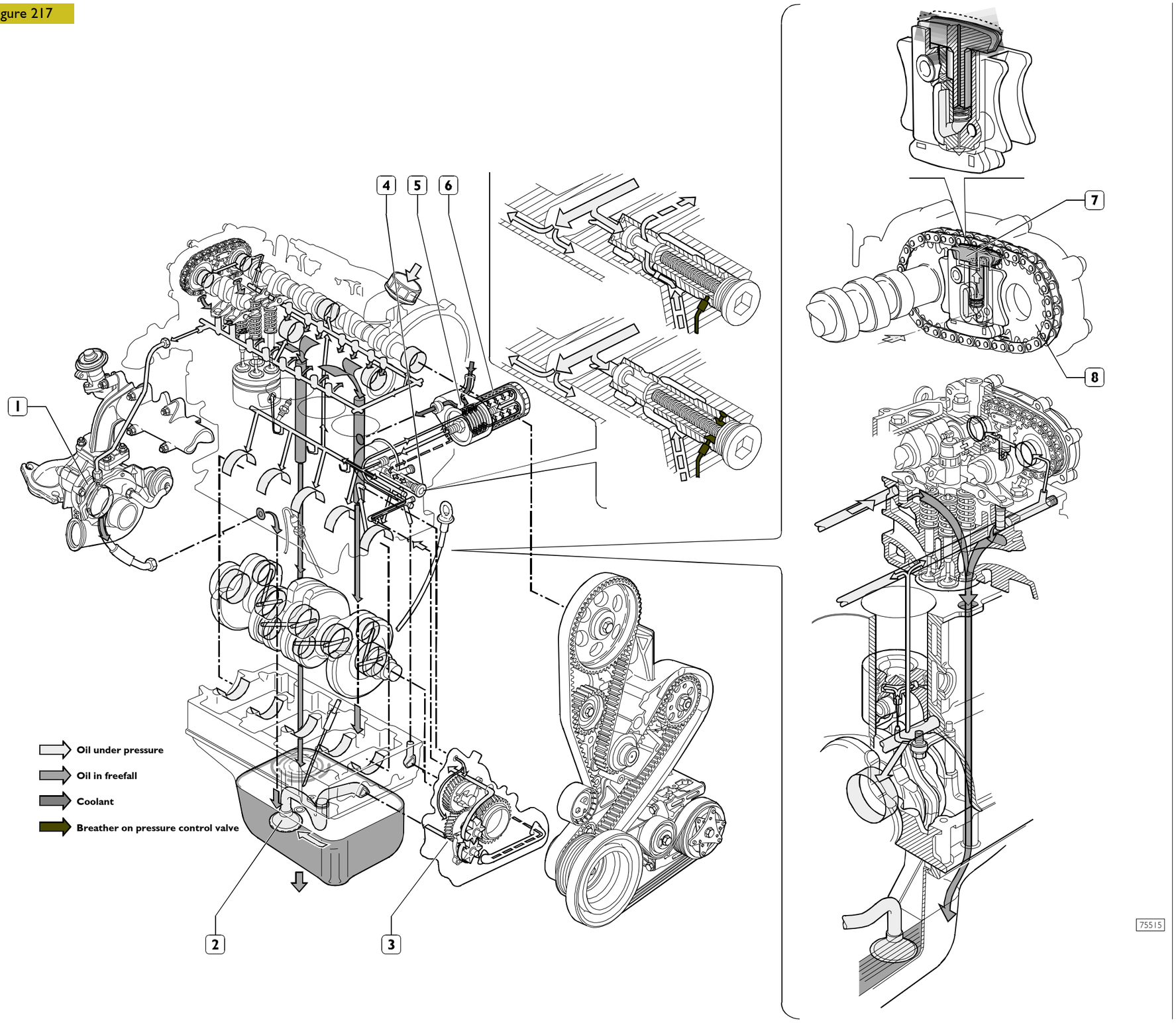

OIL VACUUM PUMP ASSEMBLY (GPOD)

Figure 218

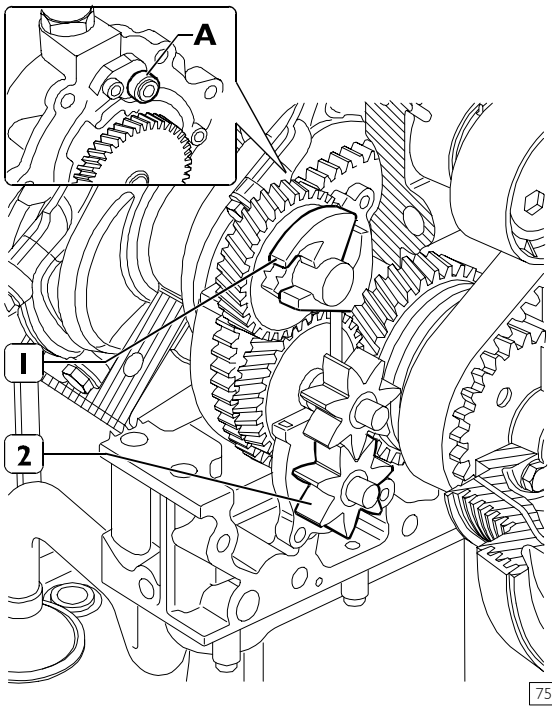

DIAGRAM OF GPOD ASSEMBLY ON ENGINE

1. Vacuum pump – 2. Oil pump – 3. Crankshaft – A. Vacuum pump oil supply hole.

Clearance between the crankshaft gear teeth and the oil pump drive gear 0.003 ÷ 0.2 mm.
The assembly must not be overhauled; in the event of defective operation, it must be replaced.

503010 Oil pump

Figure 219

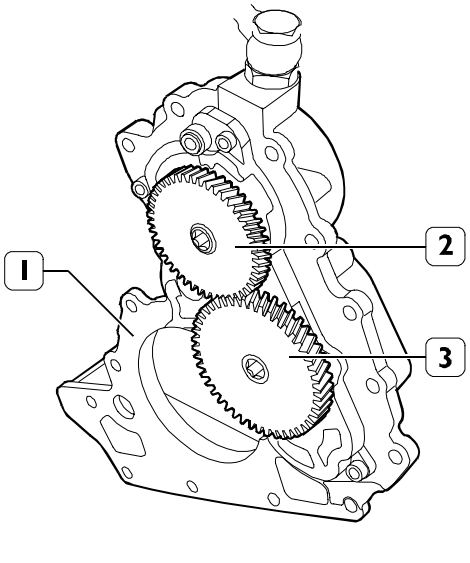

The oil pump (3) is a gear pump driven directly by the crankshaft.

Characteristic data

transmission ratio	1.15	
displacement	16.2	cm^3
pumping diameter	49.5	mm
number of teeth	7	
height	11	
oil pump minimum speed	862	rpm
oil pump max. speed	4485	rpm
oil pump over-revs	5247	rpm
oil pump forced over-revs	6279	rpm
speed	2500	rpm
torque	2.1	Nm
power draw (calc.)	550	W

Oil temperature: 100°C – closed recirculation – max. outlet pressure 5 bars	
engine speed rpm (oil pump speed – rpm)	capacity (l/min)
750 (862)	12
3900 (4485)	68

Vacuum pump

The vacuum pump (2, Figure 219), with radial blades, is also incorporated in the GPOD (1, Figure 219). It is driven directly by the oil pump.

transmission ratio	3.25	
displacement	86	cm^3
volume to drain	4.5	litres
volume to drain with EGR	9	litres
chamber diameter	65	mm
rotor diameter	50	mm
cam	7.5	mm
number of blades	3	
height	34	mm
vacuum pump minimum speed	994	rpm
vacuum pump max. speed	5168	rpm
vacuum pump over-revs	6046	rpm
vacuum pump forced over-revs	7235	rpm
theoretical flow rate at minimum (air)	85.5	l/min
actual flow rate at minimum (air) – at atmospheric pressure	46	l/min
Theoretical speed at max. speed – (air)	444.4	l/min
Actual flow rate at max. speed – (air) at atmospheric pressure	60	l/min
measured power draw (maximum)		
speed	2500	rpm
torque	2.1	Nm
power draw (calc.)	550	W

Oil temperature: 100°C – engine speed 750 rpm (pump speed 994 rpm)			
tank (litres)	vacuum (bar)	0.5	0.8
4.5	time (sec)	4.5	12.5
5.6		6.0	16.0
9		9.0	24.0

543475 Oil pressure control valve

Figure 220

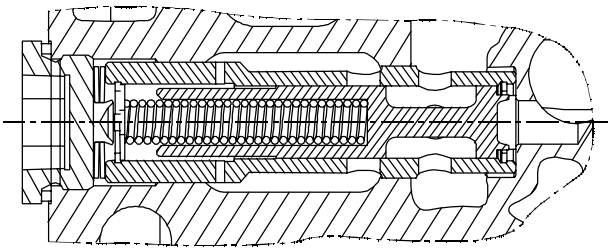

75520

CROSS-SECTION OF OIL PRESSURE CONTROL VALVE MOUNTED IN CRANKCASE

Valve removed from crankcase L = 51.75 mm.
Valve fitted in crankcase L = 50.75 mm.
Start of opening 4 bar L = 49.5
maximum opening 4.6 bar L = 44.

Figure 221

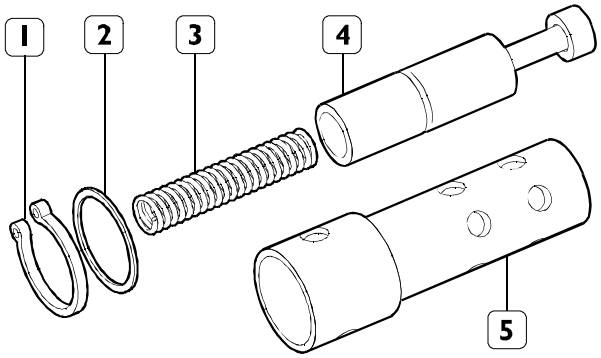

75521

PARTS COMPRISING THE OIL PRESSURE CONTROL VALVE

1. Split ring – 2. Washer – 3. Spring – 4. Valve – 5. Valve casing.

Figure 222

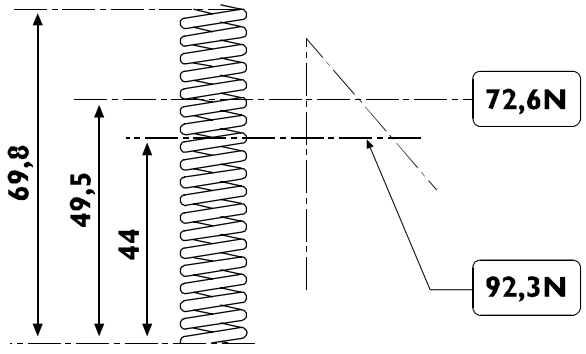

75522

MAIN DATA OF THE OIL PRESSURE CONTROL VALVE SPRING

543070 Oil filter

Figure 223

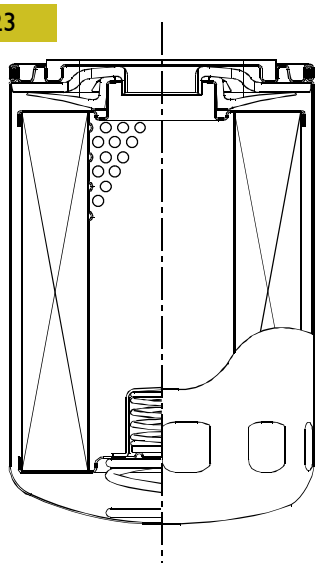

75523

Oil filter with single filtration with built-in by-pass valve – opening pressure 2.5 ±0.3 bar.

543110 Modine heat exchanger

Figure 224

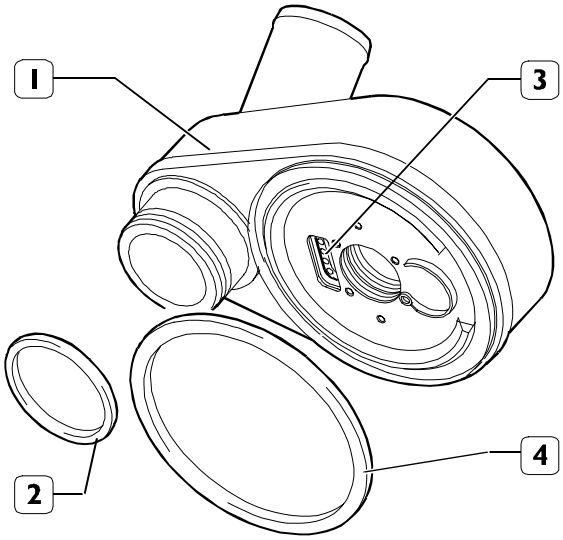

75524

Thoroughly clean the heat exchanger (1).
Always change the seals (2 and 4).
Built-in safety valve (3).
Opening pressure 0.82 - 1.03 bar

540480 Oil vapour recirculation system

Description

The oil vapours formed in the sump while the engine is running, passing through the overhead cover, are channelled into the separator / condenser filter known as the blow-by. The filter is structured in two sections:

- The first one with a labyrinth, where most of the vapours are condensed and return to the sump through an umbrella outlet valve.
- The second one includes a coalescence filter that condenses the remaining vapours that return to the sump through another umbrella valve.

The portion of vapour that has not condensed is sent, via a MANN-HUMMEL valve, to the intake duct and burnt during normal engine operation.

The blow-by filter cannot be taken apart and must therefore be replaced entirely.

Figure 225

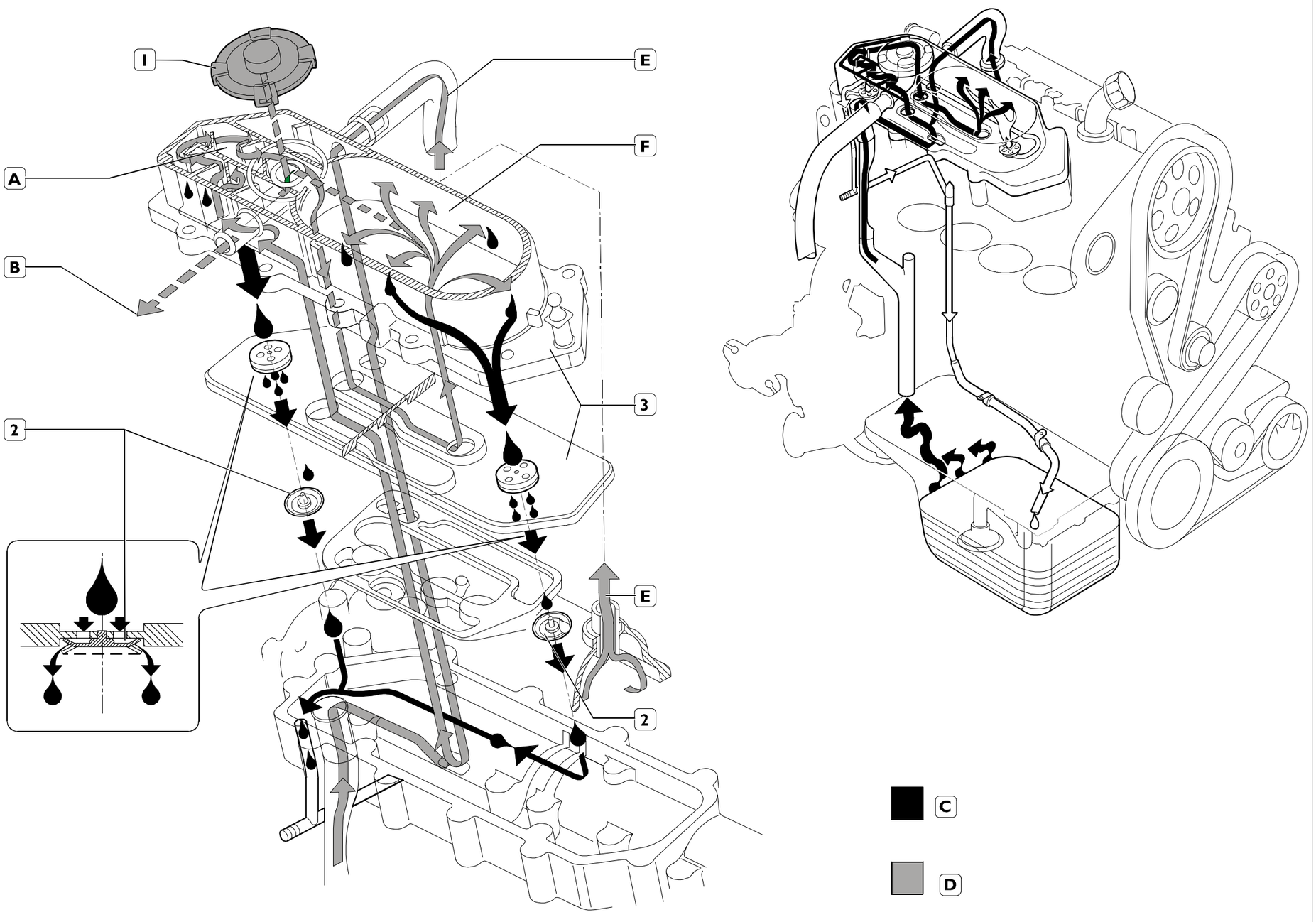

OIL VAPOUR RECIRCULATION DIAGRAM

1. MANN-HUMMEL valve – 2. Umbrella valves – 3. Blow-by filter – A. Labyrinth – B. Intake oil vapour recovery flow – C. Oil return flow into sump – D. Flow of oil vapours from the sump – E. Flow of oil vapours from the overhead – F. Coalescence filter.

5432 COOLING

Description

The engine cooling system is the type with forced circulation in a closed circuit. It comprises the following parts:

- An expansion tank whose plug has two valves incorporated in it: an outlet and an inlet, which govern the pressure of the system.
- A coolant level sensor at the base of the expansion tank.
- An engine cooling module to dissipate the heat taken from the engine by the coolant with a heat exchanger for the intercooler.
- A heat exchanger to cool the lubricating oil.
- A heat exchanger to cool the exhaust gases (engines with EGR).
- A centrifugal water pump incorporated in the crankcase.
- An electric fan comprising an electromagnetic coupling on whose shaft a hub turns idle that is fitted with an axially mobile metal plate on which is mounted the impeller.
- A 3-way thermostat governing the circulation of the coolant.

Operation

The water pump driven by a poly-V belt by the crankshaft sends coolant into the crankcase and with a greater head into the cylinder head.
When the coolant temperature reaches and exceeds the working temperature, it causes the thermostat to open and the fluid is channelled from here to the radiator and cooled by the fan.
The pressure in the system due to the change in temperature is governed by the outlet (2) and inlet (1) valves incorporated in the expansion tank filler plug (detail A).
The outlet valve (2) has a twofold function:

- to keep the system slightly pressurized so as to raise the boiling point of the coolant;
- to discharge into the atmosphere the excess pressure produced in case of high coolant temperatures.

The function of the inlet valve (1) is to permit transferring the coolant from the expansion tank to the radiator when a lower pressure is created in the system due to the reduction in volume of the coolant as a result of its temperature lowering.
Outlet valve opening 1 ± 0.1 kg/cm^2.
Inlet valve opening 0.005 – 0.02 kg/cm^2.

Figure 226

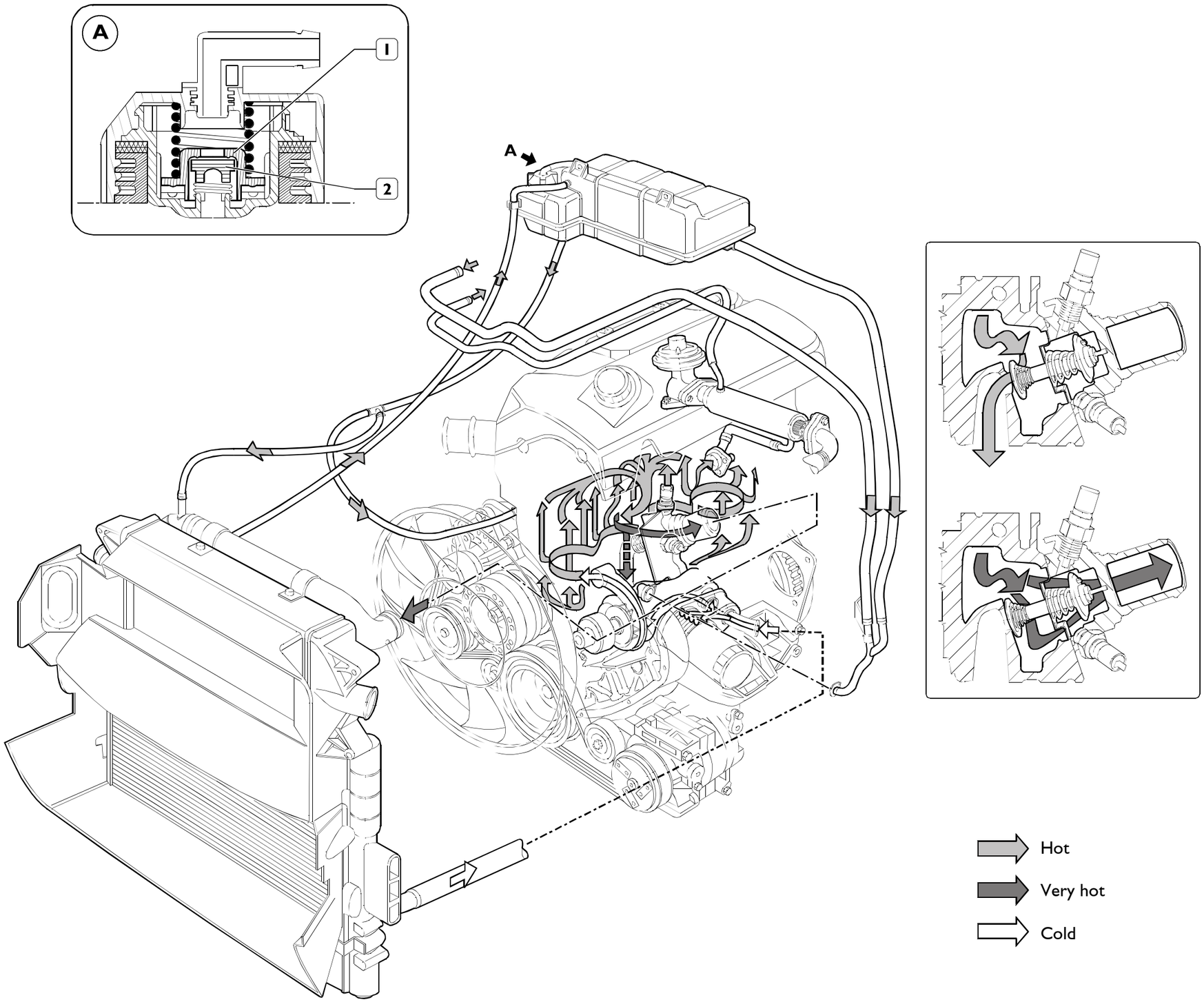

543212 Electromagnetic pulley

Figure 227

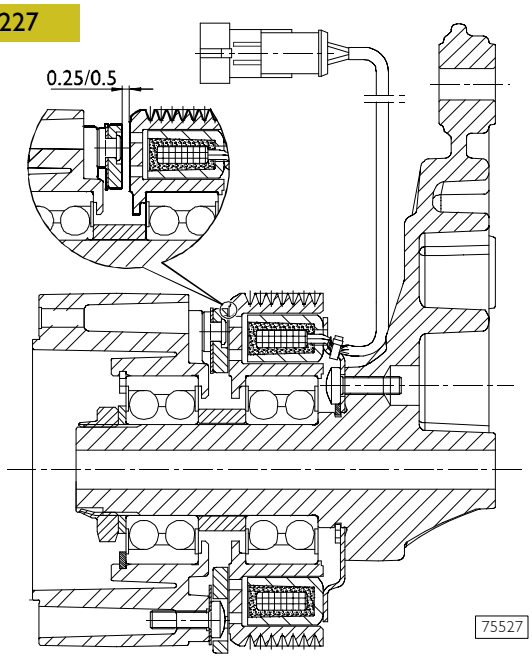

Characteristics

Transmissible torque at 20°C with clutch run in	45 Nm
Voltage	12 Volts
Power input	26 W

The electric fan control relay is energized or de-energized according to the temperatures of the engine coolant, turbocharging air and fuel.

Turbocharging air temperature

It activates at > 75°C and deactivates at < 65°C.
Coolant temperature (if the sensor is not defective)
It activates at > 96°C and deactivates at < 84°C.

Fuel temperatures

(if the coolant temperature sensor is acknowledged to be defective by the EDC control unit)
It activates at > 20°C and deactivates at < 10°C.

543210 Water pump

Figure 228

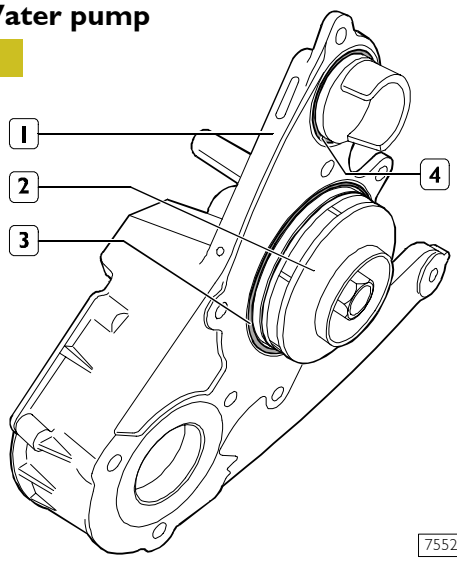

The water pump (3) cannot be overhauled. In case of coolant leaking from the seal or damage, it must be replaced. The water pump casing (1) is also used as a mounting for the high-pressure pump. The seals (3 and 4) must always be replaced.

Figure 229

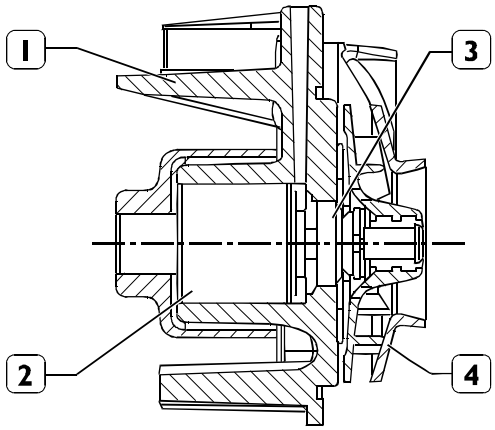

LONGITUDINAL CROSS-SECTION OF THE WATER PUMP
1. Pump casing – 2. Pump drive shaft together with bearing – 3. Seal – 4. Impeller.

543250 Thermostat

Figure 230

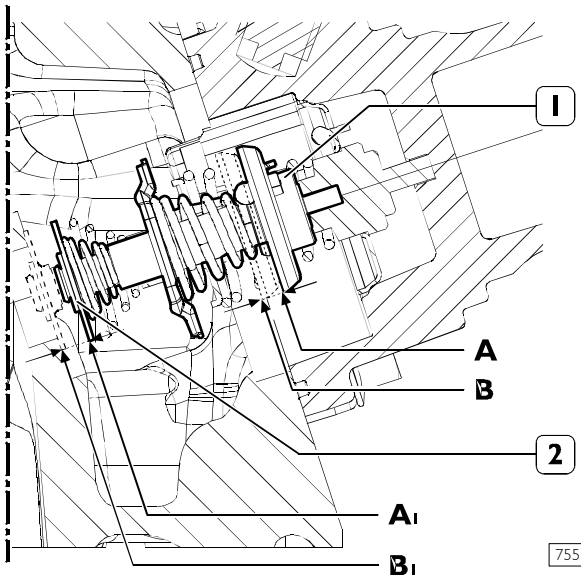

The by-pass thermostat (1) needs no adjustment.
If there is any doubt about its operation, replace it.
The thermostat casing is fitted with the thermometric switch/transmitter and water temperature sensor.

A. – A1 Start of stroke at 78°C ±2°C.
B. Valve (1) stroke at 94°C = 7 mm.
B1 Valve (2) stroke 94°C, 6.4 mm
The stroke of 7 mm less than 60".

TURBOCHARGING

Figure 231

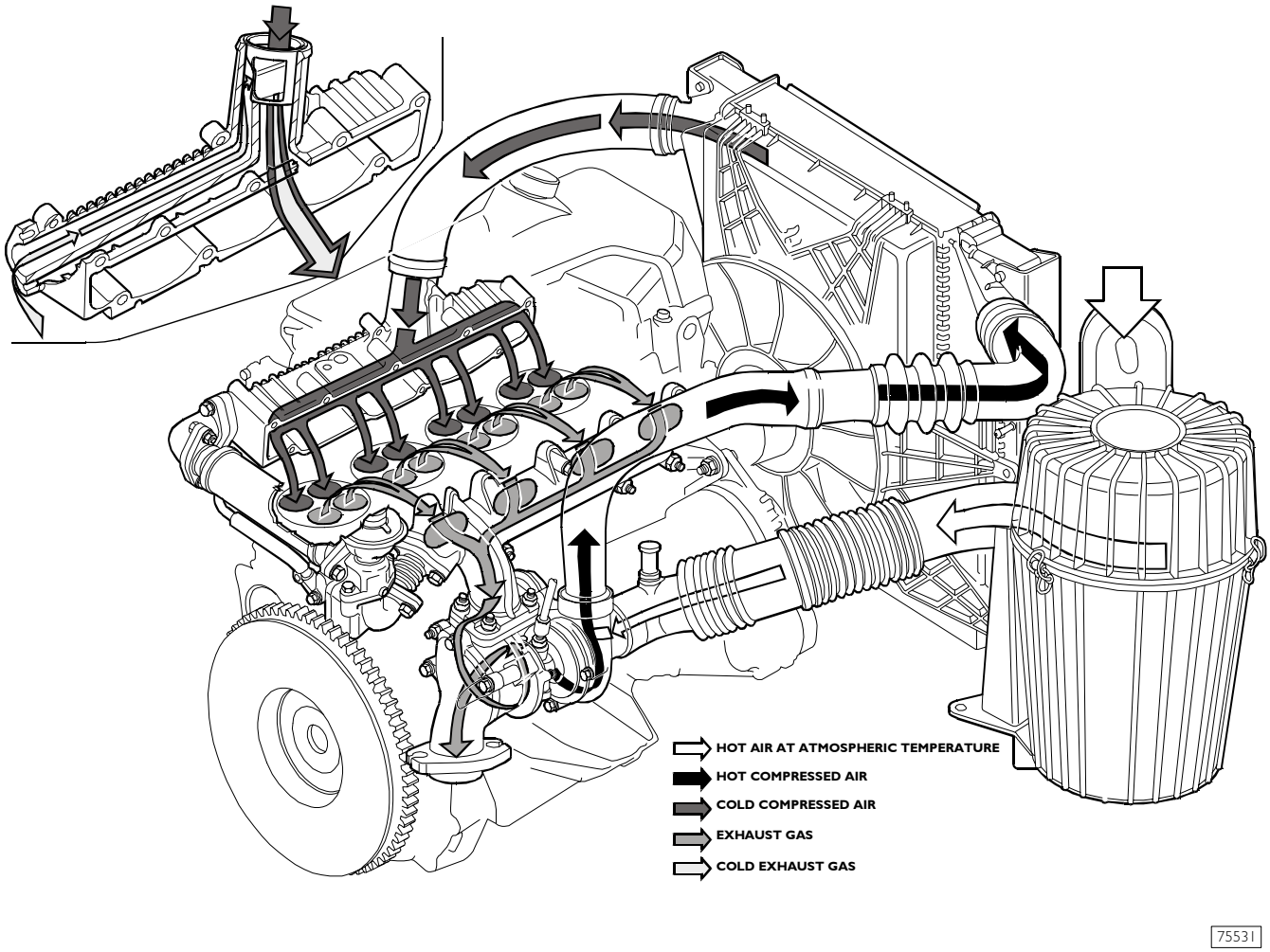

TURBOCHARGING DIAGRAM

Description

The turbocharging system comprises an air filter, turbocharger and intercooler.
The air filter is the dry type comprising a filtering cartridge to be periodically replaced.

The function of the turbocharger is to use the energy of the engine's exhaust gas to send pressurized air to the cylinders.
The intercooler comprises a radiator included in the engine coolant radiator and its function is to lower the temperature of the air leaving the turbocharger to send it to the cylinders.

542410 Turbocharger

Figure 232

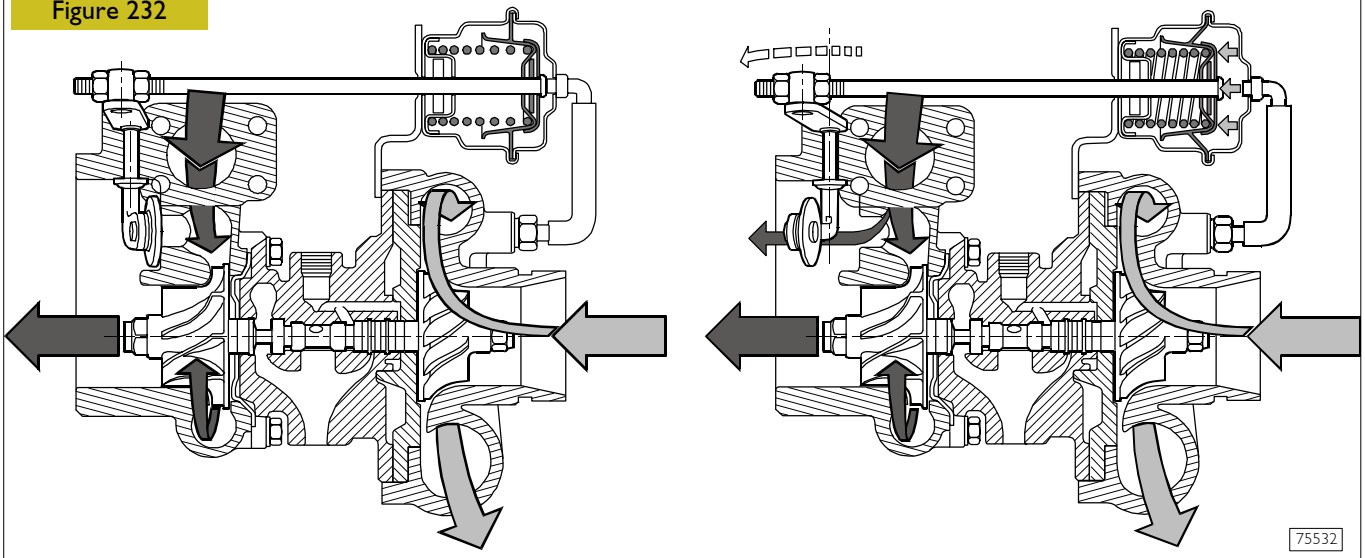

A. THROTTLE VALVE SHUT

B. THROTTLE VALVE OPEN

Figure 233

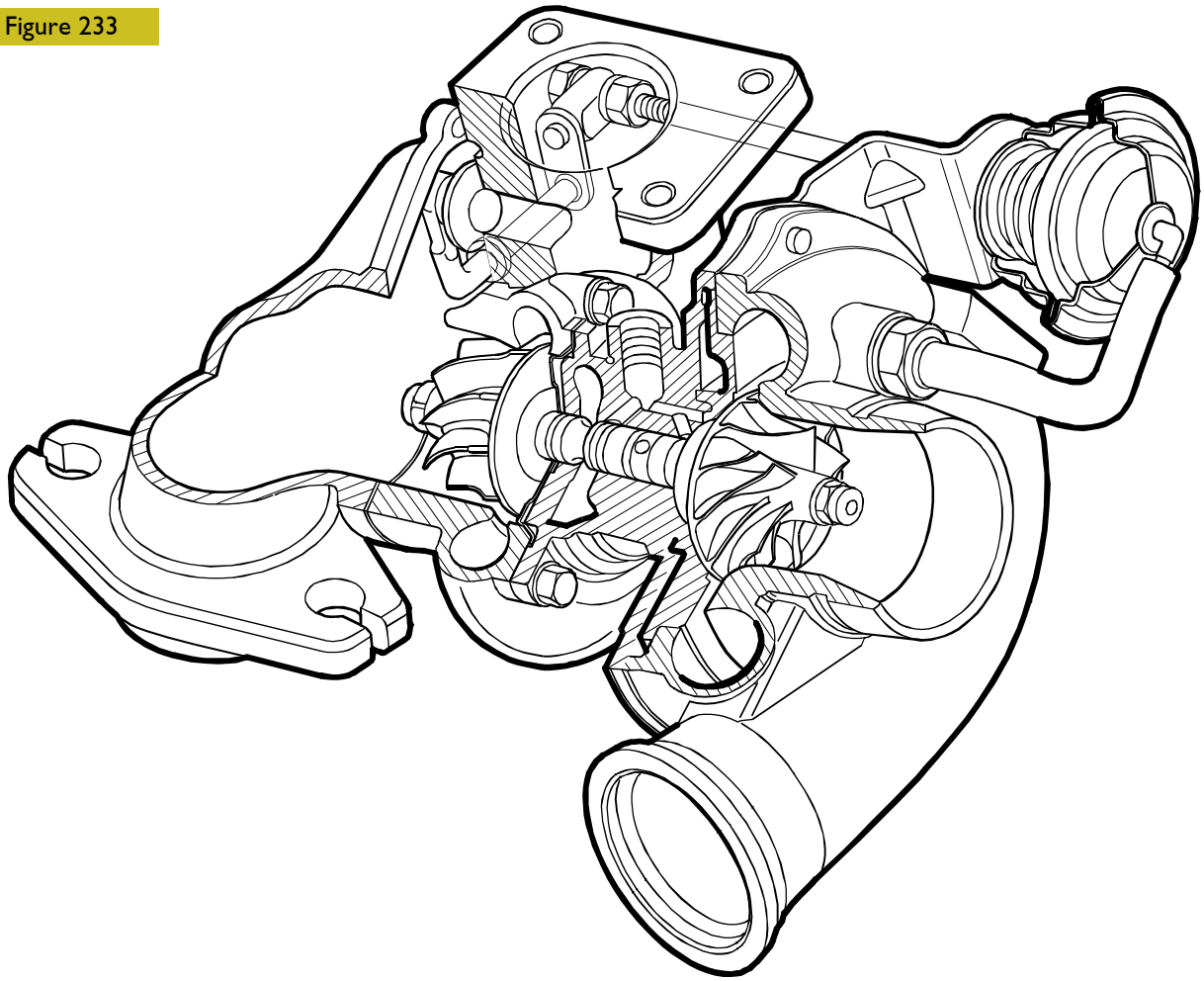

It is basically composed of:

- a central casing housing a shaft supported by bushings at whose opposite ends are fitted the turbine wheel and the compressor rotor;
- a turbine casing and a compressor casing mounted on the end of the central body;
- an overpressure relief valve fitted on the turbine casing. Its function is to choke the exhaust gas outlet (detail B), sending a portion of the exhaust gas straight into the exhaust pipe when the turbocharging pressure downstream from the turbocharger reaches the setting.

REPAIRS

On finding irregular engine operation due to the turbocharging system, it is first expedient to perform the checks on the turbocharger, check the efficiency of the seals and the fixing of the couplings, additionally checking there is no clogging in the intake sleeves, air filter or radiators. If the turbocharger damage is due to a lack of lubrication, check that the oil circulation pipes are not burst or clogged, in which case replace them or eliminate the trouble.

54249 Pressure relief valve
Checking and adjusting pressure relief valve

Figure 234

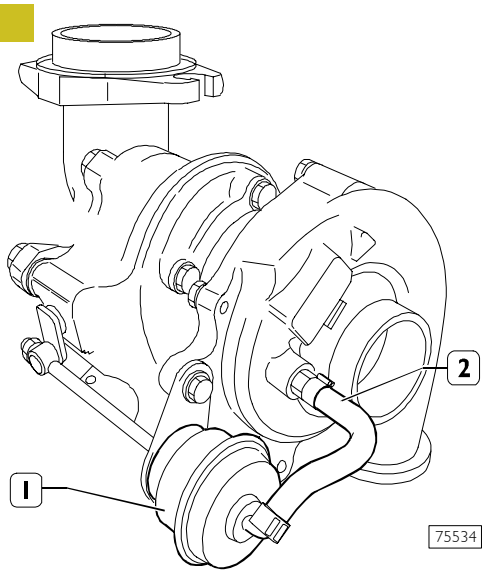

Cover the air, exhaust gas and lubricating oil inlets and outlets. Thoroughly clean the outside of the turbocharger using anticorrosive and antioxidant fluid. Disconnect the pipe (2) from the union of the pressure relief valve (1) and fit on it the pipe of the device 99367121 (1, Figure 235).

Figure 235

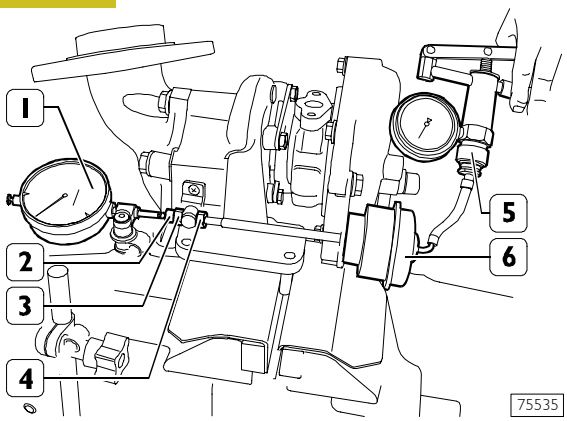

Rest the tip of the dial gauge (1) with a magnetic base on the end of the tie rod (2) and zero it. Using the device 99367121 (5), introduce compressed air into the valve casing (6) at the prescribed pressure and make sure this value stays constant throughout the check; replace the valve if it doesn't. In the above conditions, the tie rod must have made the prescribed travel. On finding a different value, use the nuts (3 and 4).

Replacing pressure relief valve

Figure 236

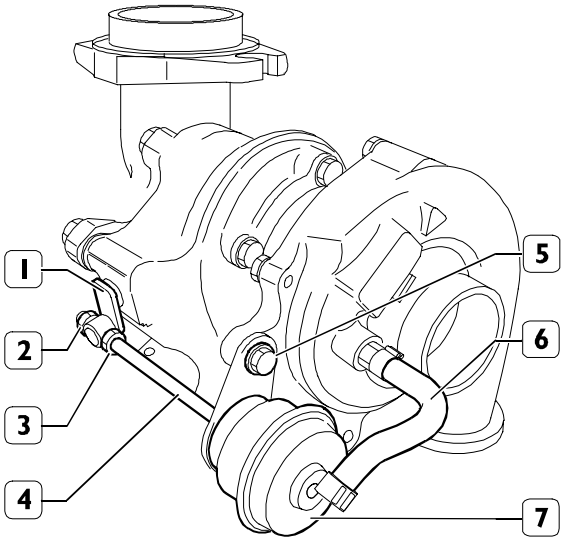

Take off the nut (2).
Take out the screws (5) and detach the bracket together with the relief valve (7) from the turbocharger.
Mount the new valve, performing the operations for disassembly in reverse order, and register it as follows:
Screw the nut (3) onto the stem (4) of the valve down to the end of the thread. Mount the lever (1) on the valve stem.
Using device 99367121 (5, Figure 235), introduce compressed air into the valve (7) at the prescribed pressure; in this condition, screw down the nut (2) until the throttle valve controlled by the lever (1) gets positioned in its seat.
Unscrew the nut (3) to bring it into contact with the lever (1) and at the same time block the nuts (2 and 3).
Adjust the pressure relief valve (7) as described under the relevant heading.
Afterwards, paint the nuts (2 and 3) with safety paint and connect the pipe (6) to the valve (7), securing it with a new retaining clamp.

Before fitting the turbocharger on the engine, it is necessary to fill the central body with engine lubricating oil.

EXHAUST GAS RECIRCULATION (EGR) SYSTEM

Figure 237

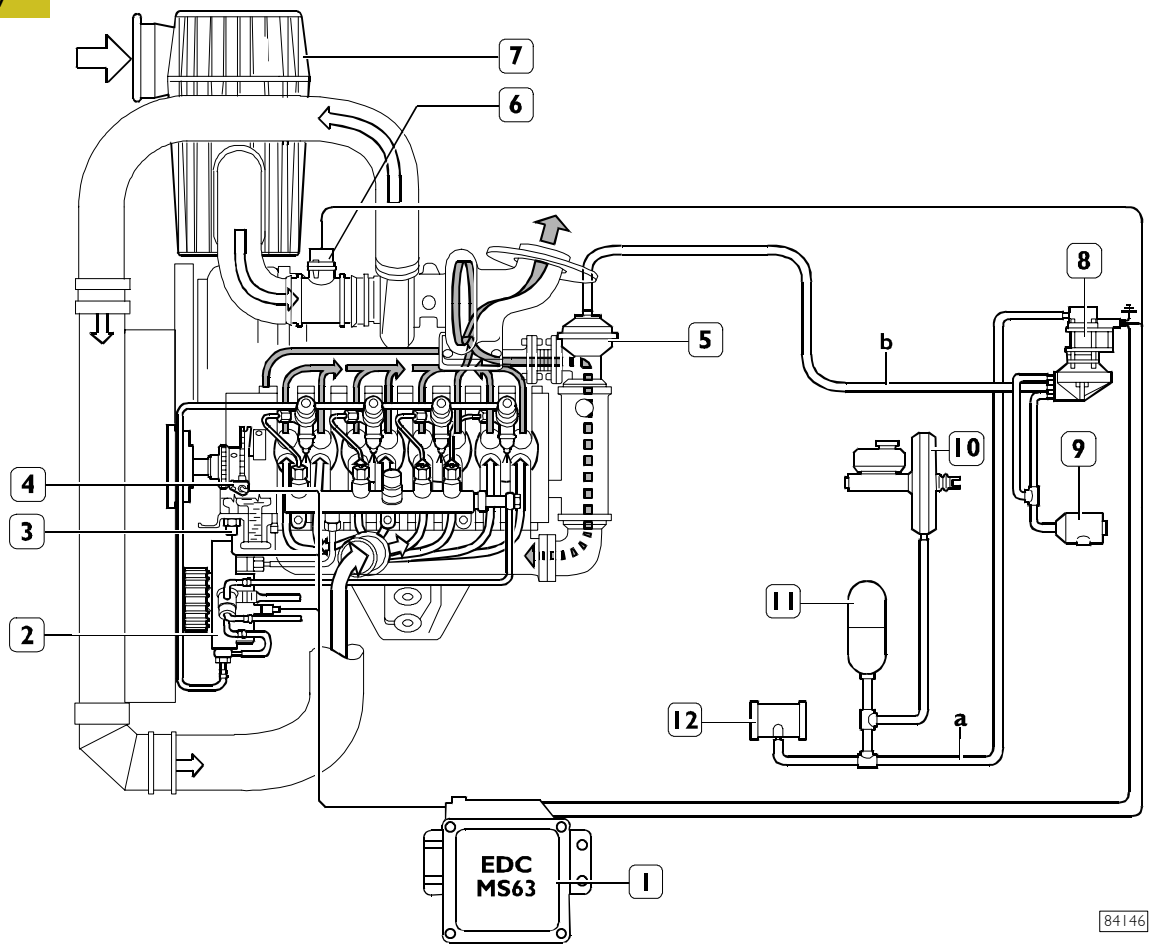

a. Brake booster vacuum circuit - b. EGR modulated vacuum circuit
1. ECU - 2. High pressure pump - 3. Coolant temperature sensor - 4. Engine rpm sensor - 5. EGR pneumatic valve - 6. Flow meter - 7. Suction air cleaner - 8. Modulating solenoid valve - 9. Air cleaner - 10. Vacuum brake booster -11. Reservoir - 12. Vacuum unit.

EGR system operation

The EGR system is similar to that fitted on 8140.63 engines and described in the specific system section.
Differences with respect to the previous version fitted on 8140.63 engines include: application of an exhaust gas heat exchanger and air flow meter, governing system implementing EDC MS6.3 or EDC 16, different modulating solenoid valve and pneumatic EGR calibration values.

Operating principles

The ECU (MS6.3 or EDC 16) processes the data from the atmospheric pressure sensor, coolant sensor, engine rpm sensor, accelerator pedal potentiometer and controls the modulating solenoid valve via a PWM signal according to programmed settings.
The control signal output by the ECU controls the modulating solenoid valve which puts the brake booster vacuum circuit into communication with that of the EGR. The vacuum created in the EGR circuit depends on the control signal.
The vacuum acts on the pneumatic EGR valve by recalling and lifting the shutter which normally closes the passage of exhaust gasses to suction.
This puts the exhaust manifold into communication with the suction manifold and part of the exhaust gasses flows into the intake manifold.
The control signal from the ECU to the modulating valve is cancelled during engine conditions not requiring exhaust gas recirculation (cranking, cold engine, idling, load request, high altitude). The solenoid valve closes the connection between the brake booster vacuum circuit and the EGR circuit; at the same time, atmospheric pressure is re-established in the EGR circuit by letting in air through the specific air cleaner.

Figure 237/1

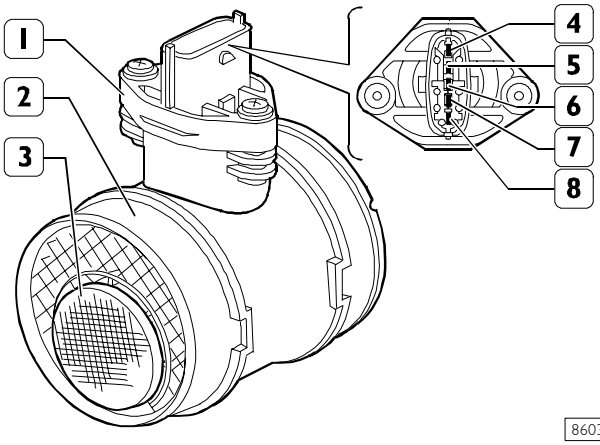

Air flow meter

1. Connector - 2. Flow meter body - 3. Air and recirculated gas inlet mesh - 4. Suction air temperature sensor - 5. Power - 6. Ground - 7. Reference voltage - 8. Output signal.

The heated film flow meter is arranged between the turbine and the intercooler.
The suction air temperature sensor is built into the flow meter; the flow meter is connected to the ECU pins A5/A17/A18/A26/A28.

Operation

The hot film membrane temperature is kept constant (approximately 120 °C higher than suction air temperature) by a heating resistor.
The air mass crossing the duct tends to subtract heat from the membrane. Consequently more current is required through the resistor to keep the temperature constant.
Current uptake is proportional to the mass of air flowing into the engine. It is measured by a Wheatstone bridge and the resulting signal is sent to the ECU.

Figure 237/2

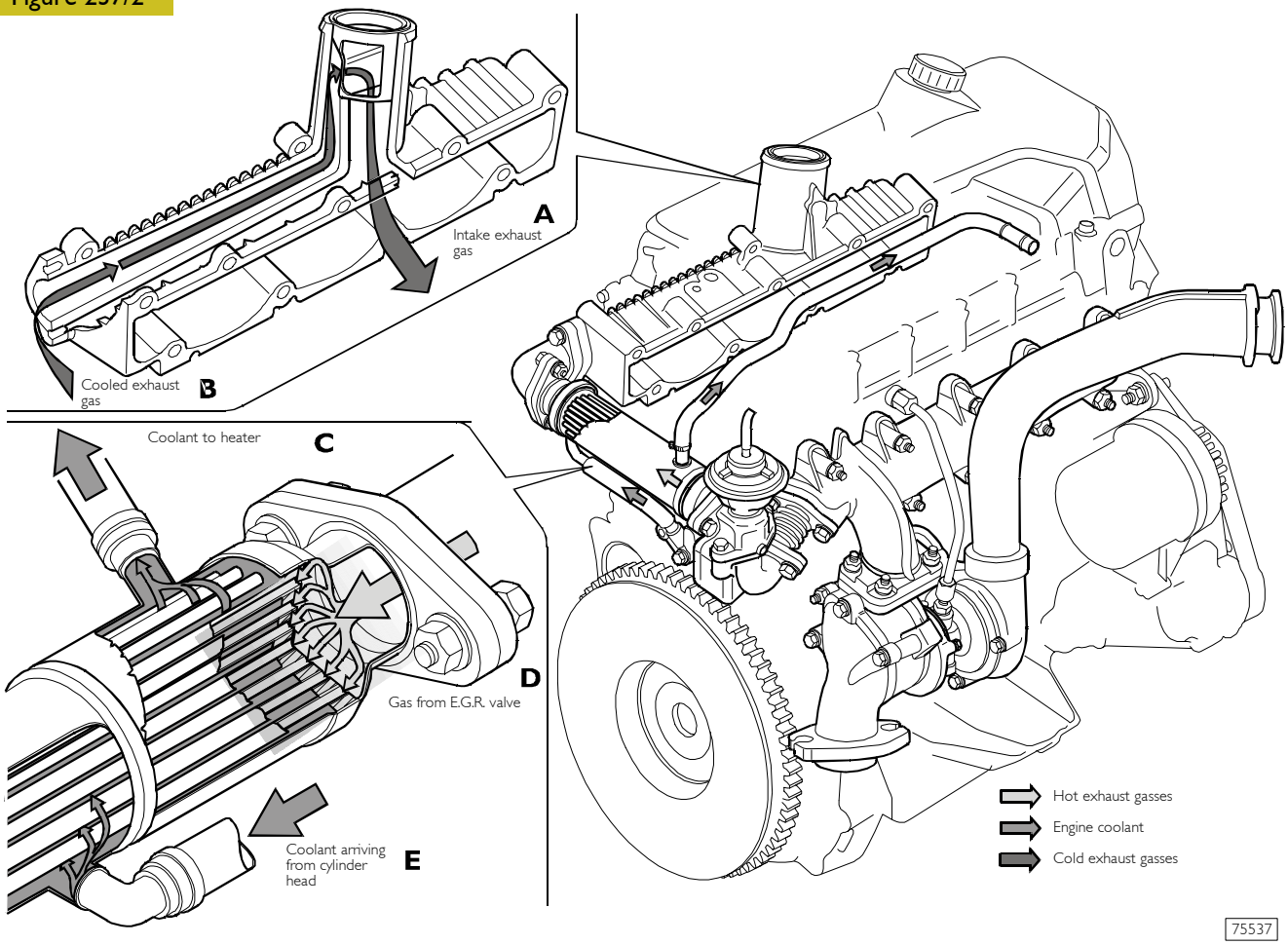

EXHAUST GAS COOLING
A. Intake exhaust gas – B. Cooled exhaust gas – C. Coolant to heater – D. Gas from E.G.R. valve – E. Coolant arriving from cylinder head.

FUEL SUPPLY
HIGH-PRESSURE ELECTRONIC INJECTION SYSTEM (MS 6.3)
General

Common Rail MS6.3 is a high-pressure electronic injection system for fast diesel engines with direct injection.
Its main features comprise:

- high injection pressures available (1600 bar);
- these pressures can be modulated between 150 bar up to the maximum operating pressure of 1600 bar, irrespective of the speed of rotation and engine load;
- capacity to operate at very high speeds (up to 6000 rpm);
- injection control precision (injection duration and advance);
- lower consumption;
- lower emissions.

The main functions of the system are basically as follows:

- checking fuel temperature;
- checking engine coolant temperature;
- checking amount of fuel injected;
- checking idling speed;
- cutting off fuel in release phase;
- checking cylinder balancing when idling;
- checking anti-sawing;
- checking smokiness at exhaust on acceleration;
- checking exhaust gas recirculation (E.G.R. if present);
- checking top speed limit;
- checking glow plugs;
- checking activation of air-conditioning system (if any);
- checking auxiliary fuel pump;
- checking position of cylinders;
- checking main and pilot injection advance;
- checking closed cycle of injection pressure;
- checking turbocharging pressure;
- self-diagnosis;
- connection with immobilizer unit;
- checking maximum torque limitation.

The system makes pre-injection (pilot injection) possible before the TDC with the advantage of decreasing the derivative of the pressure in the combustion chamber, lowering the noise level of combustion, which is typical of direct injection engines.
The control unit checks the amount of fuel injected, adjusting the line pressure and injection times.
The information the control unit processes to regulate the amount of fuel to be injected comprises:

- engine speed;
- coolant temperature;
- turbocharging pressure;
- air temperature;
- intake air quantity;
- battery voltage;
- diesel pressure;
- position of throttle pedal.

Figure 238

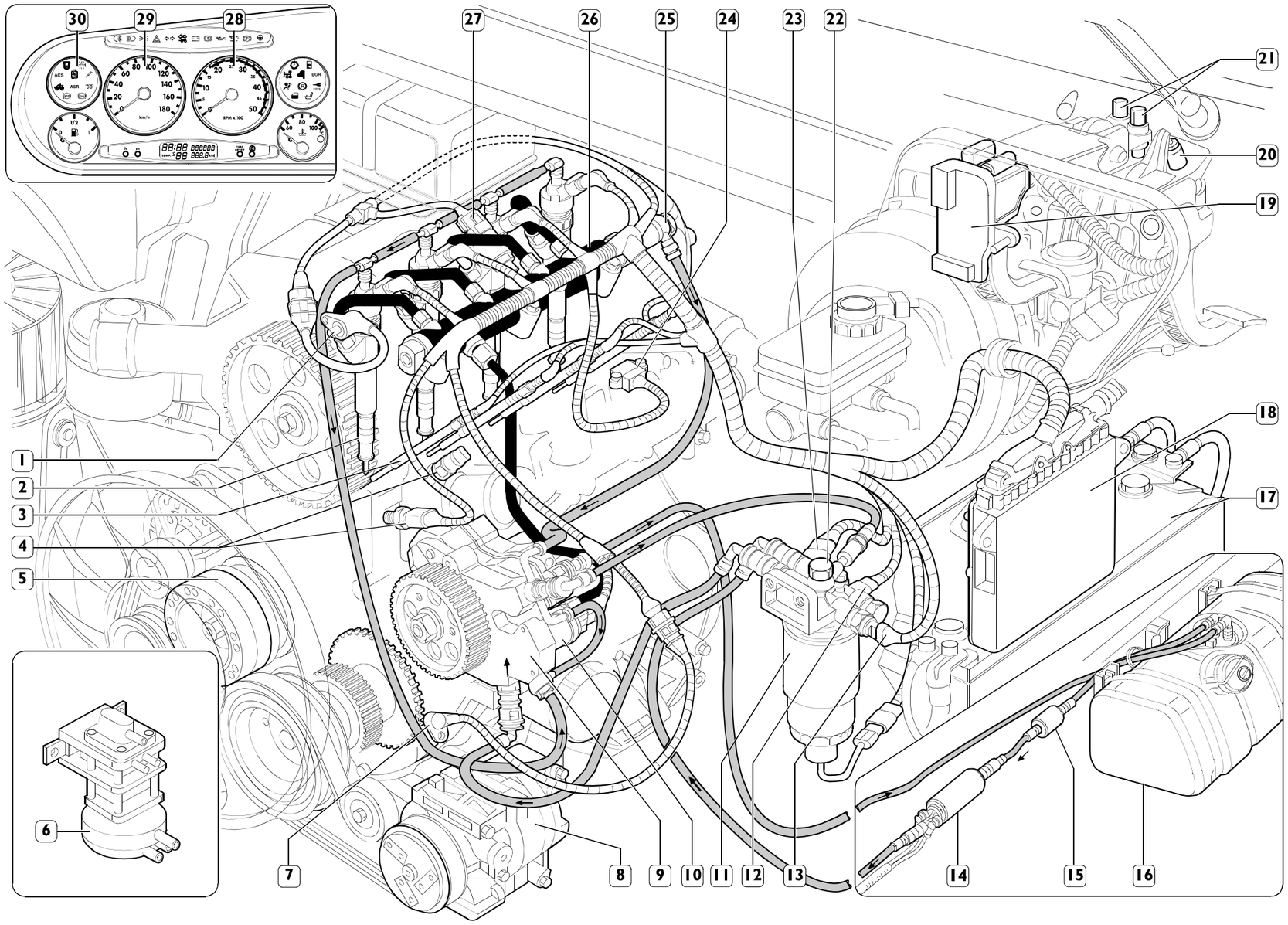

75539

HIGH-PRESSURE ELECTRONIC INJECTION SYSTEM COMPONENTS LAYOUT

1 Engine speed sensor – 2 Electro-injectors – 3 Glow plug – 4 Coolant temperature sensor – 5 Electromagnetic fan – 6 E.G.R. valve modulator (if present) – 7 Timing phase sensor – 8 Compressor (if present) – 9 High-pressure pump – 10 Pressure regulator– 11 Fuel filter – 12 Fuel temperature sensor – 13 Fuel filter clogging sensor – 14 Electric supply pump – 15 Fuel pre-filter – 16 Fuel tank – 17 Battery – 18 Control unit with atmospheric pressure sensor – 19 Throttle pedal sensor – 20 Clutch pedal sensors – 21 Brake pedal sensors – 22 Fuel check valve – 23 Heater – 24 Air temperature pressure sensor – 25 Hydraulic accumulator (rail) pressure relief device – 26 Hydraulic accumulator (rail) – 27 Hydraulic accumulator (rail) fuel pressure sensor – 28 Engine rev counter– 29 Tachograph – 30 Starter heater indicator light.

SYSTEM OPERATION
Self-diagnosis – BLINK CODE

The control unit self-diagnosis system checks the signals from the sensors, comparing them with the admitted limits (see relative heading):

Immobilizer recognition

When the control unit receives the signal of the key on "MAR" it communicates with the immobilizer control unit to enable starting.

Checking fuel temperature

With the fuel temperature greater than 75°C, detected by the sensor on the fuel filter, the control unit operates the pressure regulator to decrease the line pressure (injection times are not changed). If the temperature exceeds 90°C, the power is reduced to 60%.

Checking engine coolant temperature

The control unit, depending on the temperature:

- of the engine coolant, turbocharging air and fuel, operates the electromagnetic fan (Baruffaldi) and switches on the coolant temperature warning light.

Checking quantity of fuel injected

According to the signals from the sensors and the mapped values, the control unit:

- operates the pressure regulator;
- varies the "pilot" injection time to 2200 rpm;
- varies the "main" injection time.

Checking idling adjustment

The control unit processes the signals from the various sensors and regulates the amount of fuel injected:

- it operates the pressure regulator;
- it varies the injection times of the electro-injectors.

Within certain thresholds the speed takes account of the battery voltage.

Fuel cut-off in release phase

In the phase of releasing the throttle pedal the control unit actuates the following logic elements:

- it cuts off supply to the electro-injectors;
- it partially reactivates supply to the electro-injectors before reaching idling speed;
- it operates the fuel pressure regulator.

Checking cylinder balancing on idling

According to the signals received from the sensors, the control unit controls the regularity of the torque at idling speed:

- it varies the amount of fuel injected into the single electro-injectors (injection time).

Checking regular engine rotation (anti-sawing)

It ensures regular engine rotation at a constant rate while increasing revs.
The control unit processes the signals received from the sensors and determines the amount of fuel to be injected via:

- the pressure regulator;
- the electro-injector opening time.

Checking smokiness at exhaust on acceleration

With heavy acceleration, on the basis of the signals received from the air introduction meter and engine speed sensor, the control unit determines the optimum amount of fuel to inject:

- it operates the pressure regulator;
- it varies the electro-injector injection time.

Checking exhaust gas recirculation (E.G.R. if present)

Depending on the engine load and the signal from the accelerator pedal sensor, the control unit limits the amount of air taken in, actuating partial suction of the exhaust gases.

Checking top speed limit

Depending on the number of revs, the control unit actuates two action strategies:

- at 4250 rpm it cuts off the fuel, decreasing the electro-injector opening time;
- over 5000 rpm it deactivates the electro-injectors.

Checking regular rotation on acceleration

Regular progression is assured in all conditions by the control of the pressure regulator and the electro-injector opening time.

Checking glow plug control unit

The injection control unit, in the phase of:

- starting
- after-starting

times operation of the glow plugs according to the engine temperature.

Checking activation of air-conditioning system

The control unit operates the air-conditioning compressor:

- switching it on/off when the relative switch is pressed;
- momentarily turning it off (approximately 6 sec.) if the engine coolant reaches the set temperature.

Checking fuel pump

Irrespective of the speed, the control unit:

- supplies the auxiliary fuel pump with the key on MAR;
- cuts off auxiliary pump supply if the engine is not started up within a few seconds.

Checking diesel warming

It times operation of diesel warming in relation to ambient temperature.

Checking cylinder position

During each turn of the engine, the control unit recognizes which cylinder is in the power stroke and operates the injection sequence for the appropriate cylinder.

Checking pilot and main injection timing

According to the signals from the various sensors, including the absolute pressure sensor built into the control unit, the control unit determines the optimum point of injection according to internal mapping.

Checking injection pressure closed cycle

Depending on the engine load, determined by processing the signals from the various sensors, the control unit operates the regulator to obtain optimum line pressure.

Fuel supply

The fuel supply is calculated in relation to:

- accelerator pedal position
- engine speed
- quantity of air introduced.

The outcome may be corrected in relation to:

- the water temperature.

Or to avoid:

- noise
- smoke
- overloading
- overheating
- turbine over-revving.

The delivery can be modified in the case of:

- action of external devices (ABS), ABD, EDB
- serious trouble decreasing the load or stopping the engine.

After determining the mass of air introduced by measuring its volume and temperature, the control unit calculates the corresponding mass of fuel to inject into the relevant cylinder (mg per delivery) also taking into account the temperature of the diesel.
The mass of fuel calculated in this way is first converted into volume (mm^3 per delivery) and then into degrees of throw, or duration of injection.

Correcting flow rate according to water temperature

A cold engine meets with greater resistance during operation: friction is high, the oil is still very viscous, and the various clearances are not yet optimized.
In addition, the injected fuel tends to condense on the metal surfaces that are still cold.
The fuel supply for a cold engine is therefore greater than for a warm one.

Correcting flow rate to avoid noise, smoke or overloading

The behaviour that could lead to this kind of trouble is well known.

The designer has therefore included special instructions in the control unit to avoid it.

De-rating

In the event of the engine overheating, injection is modified, decreasing the delivery to a varying degree, in proportion to the temperature reached by the coolant.

Injection timing electronic test

The advance (start of delivery, expressed in degrees) may be different from one injection to the next, also differentiated from one cylinder to another. It is calculated, similarly to the delivery, in relation to the engine load (accelerator position, engine speed and air introduced).
The advance is appropriately corrected:

- in phases of acceleration;
- according to the water temperature.

And also to obtain:

- lower emissions, noise and overloading;
- better vehicle acceleration.

An extremely high advance is set on starting, depending on the water temperature.
Feedback from the start of delivery is supplied by the change in impedance of the injector solenoid valve.

Speed governor

The electronic speed governor has both features of governors:

- idling and top speed
- all speeds

It is stable in ranges where conventional, mechanical governors are imprecise.

Engine starting

During the first few turns of the engine, the timing and cylinder no. 1 recognition signals (flywheel sensor and camshaft sensor) are synchronized.
The accelerator pedal signal is ignored on starting. Starting delivery is set only according to water temperature, by a special map.
When the control unit detects such speed and acceleration of the flywheel as to be able to consider the engine started up and no longer driven by the starter motor, it re-enables the accelerator pedal.

Cold starting

If even just one of the three temperature sensors (water, air or diesel) records a temperature lower than 10°C, pre-post heating is activated.
When the key makes contact the pre-heating indicator light comes on and stays on for a length of time that varies in relation to the temperature (while the glow plugs in the cylinder head heat the air), then flashes. It is now possible to start up the engine.
When the motor is running this indicator light goes out, while the glow plugs continue to be powered for a certain length of time (variable) for post-heating.
If, with the indicator light flashing, the engine is not started up within 20-25 seconds (inattention time), the operation is cancelled so as not to run down the batteries pointlessly.
The pre-heating curve is also variable in relation to the battery voltage.

Warm starting

If the reference temperatures all exceed 10°C, when the key makes contact the indicator light comes on for approximately 2 sec., for a short test, and then goes out. It is now possible to start up the engine.

Run up

When the key makes contact, the control unit transfers the information stored in memory when the engine was last stopped into the main memory (see After Run) and makes a diagnosis of the system.

After run

Whenever the engine is switched off with the key, the control unit stays powered for a few seconds by the main relay.
This makes it possible for the microprocessor to transfer some data from the main memory (volatile) to a non-volatile memory, which can be erased and written over (EEPROM), so as to make it available at the next start up (see Run Up).

These data basically consist of:

- various settings (engine idling adjustment, etc.);
- settings of some components;
- fault memory.

The process lasts a few seconds, typically from 2 to 7 (depending on the amount of data to save), after which the ECU sends a command to the main relay and makes it disconnect from the battery.



It is extremely important for this procedure not to be broken off, for example by switching off the engine with the battery cut-out, or by disconnecting the battery cut-out before 10 seconds have passed since switching off the engine.
If this happens, the functioning of the system is ensured, but repeated interruptions may damage the control unit.

Cut-off

This function cuts off fuel delivery when the vehicle is decelerating (accelerator pedal released).

Cylinder balancing

Individual cylinder balancing contributes to increasing comfort and handling.
This function permits individual, customized control over the delivery of fuel and the start of delivery for each cylinder, even differently from one cylinder to another, to compensate for the hydraulic tolerances of the injector.

The differences in flow (delivery specifications) between the various injectors cannot be evaluated directly by the control unit. This information is supplied by Modus reading the bar code of each injector at the time of assembly.

Synchronization search

If there is no signal from the camshaft sensor, the control unit is anyhow able to recognize the cylinders into which the fuel is to be injected.
If this occurs when the engine is already running, the combustion sequence has already been acquired, so the control unit continues with the sequence on which it has already been synchronized.
If this occurs when the machine is at a standstill, the control unit energizes a single solenoid valve. Within at most 2 turns of the crankshaft, injection will take place in that cylinder, so the control unit just needs to get synchronized on the firing sequence and to start up the engine.

OPERATION

In this injection system, the pressure regulator, located upstream from the high-pressure pump, governs the flow of fuel needed in the low-pressure system. Afterwards, the high-pressure pump correctly supplies the hydraulic accumulator.

This solution, pressurizing solely the necessary fuel, improves the energy efficiency and limits heating the fuel in the system. The relief valve fitted on the high-pressure pump has the function of keeping the pressure, at the pressure regulator inlet, constant at 5 bars; irrespective of the efficiency of the fuel filter and of the system upstream. The action of the relief valve causes an increase in the flow of fuel in the high-pressure pump cooling circuit.

The high-pressure pump continually keeps the fuel at the working pressure, irrespective of the timing and the cylinder that is to receive the injection and accumulates it in a duct common to all the electro-injectors.

At the electro-injector inlet, there is therefore always fuel at the injection pressure calculated by the electronic control unit.

When the solenoid valve of an electro-injector is energized by the electronic control unit, fuel taken straight from the hydraulic accumulator gets injected into the relevant cylinder.

The hydraulic system is made out of a low-pressure fuel recirculation circuit and a high-pressure circuit.

The high-pressure circuit is composed of the following pipes:

- pipe connecting the high-pressure pump outlet to the Rail;
- hydraulic accumulator;
- pipes supplying the electro-injectors.

The low-pressure circuit is composed of the following pipes:

- fuel intake pipe from the tank to the pre-filter;
- pipes supplying the mechanical supply pump and the pre-filter;
- pipes supplying the high-pressure pump via the fuel filter.

The fuel system is completed by the fuel outlet circuit from the hydraulic accumulator and from the electro-injectors.

According to the high performance of this hydraulic system, for reasons of safety it is necessary to:

- avoid connecting high-pressure pipe fittings with approximate tightening;
- avoid disconnecting the high-pressure pipes with the engine running (NEVER try bleeding, which is both pointless and dangerous).

The integrity of the low-pressure circuit is also essential for the system to work properly; it is therefore necessary to avoid all manipulation and modifications and act only in the event of leakage.

The pipes connected to the fuel filter mounting are quick-coupling ones.
Before fitting them, make sure the couplings and the associated fittings on the mounting are clean.

Figure 239

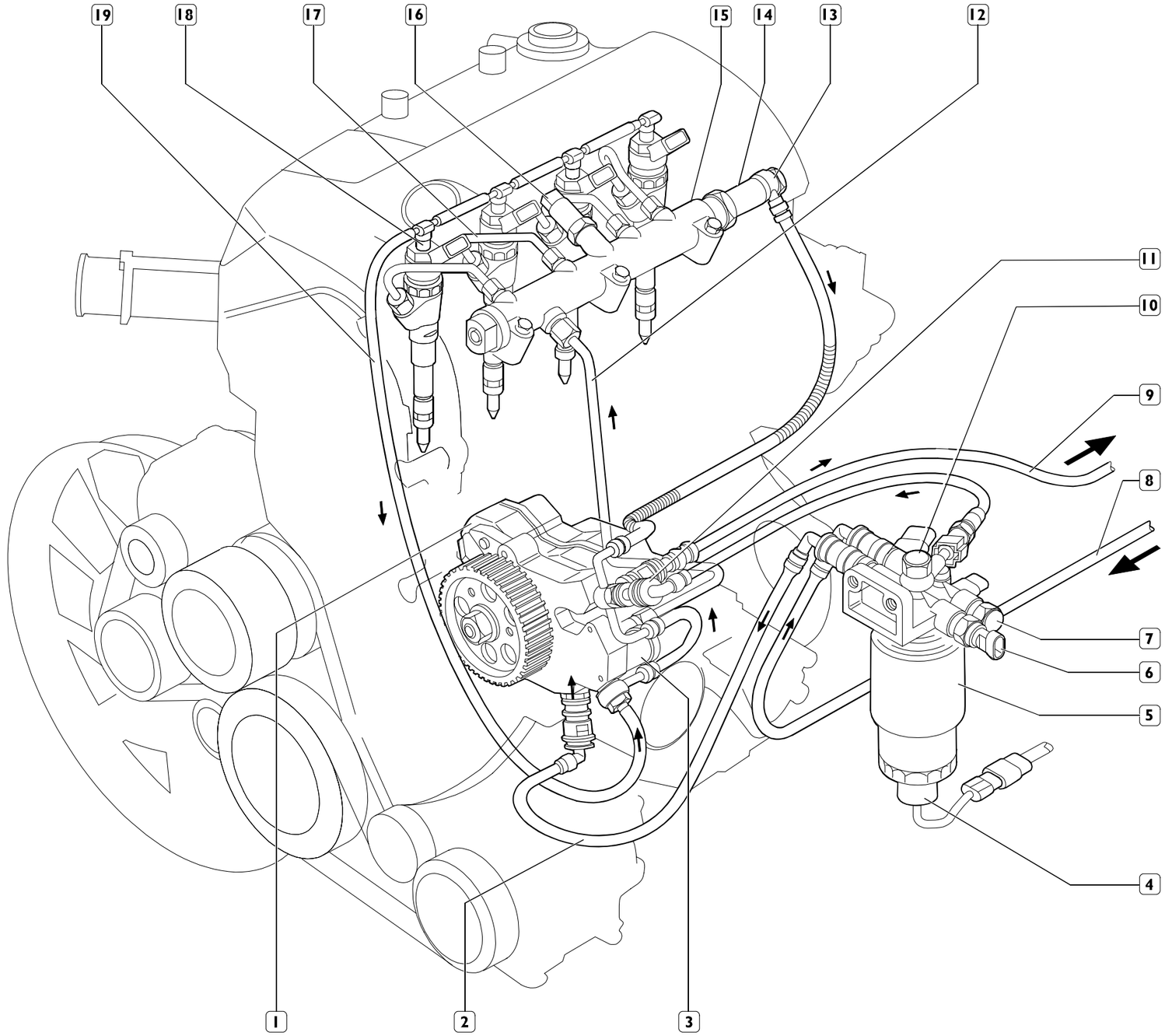

FUEL RECIRCULATION AND SUPPLY SYSTEM DIAGRAM

1. CP3 high-pressure pump with integrated supply pump – 2. Fuel arrival pipe from the filter – 3. Pressure regulator – 4. Water in filter sensor – 5. Fuel filter with water separator – 6. Fuel temperature sensor – 7. Fuel warming – 8. Fuel delivery pipe to the filter – 9. Fuel return pipe to the tank – 10. Fuel check valve – 11. Multiple coupling – 12. High-pressure delivery pipe to the hydraulic accumulator – 13. Low-pressure return pipe from the hydraulic accumulator to the multiple coupling – 14. Overpressure valve – 15. Hydraulic accumulator – 16. Pressure sensor – 17. High-pressure pipe between hydraulic accumulator and electro-injectors – 18. Electro-injectors – 19. Return pipe from the electro-injectors to the high-pressure pump CP3.

HYDRAULIC SYSTEM

The hydraulic system is composed of:

- tank
- pre-filter
- electric supply pump
- fuel filter
- high pressure supply pump with supply pump built inpressure regulator
- manifold (rail)
- electro-injectors
- supply pipes and fuel recirculation

773010 Fuel pump

This rotary positive displacement pump with integrated by-pass is mounted on the suction pipe, on the left-hand side of the chassis frame.

The fuel pump is the roller-type with positive displacement, a brush motor with energizing by permanent magnets.
The impeller turns, driven by the motor, creating volumes that shift from the inlet port to the delivery port.
These volumes are defined by the rollers that stick to the outer ring when the motor turns.
The pump has two valves, a check valve to prevent the fuel circuit from emptying (with the pump stationary) and an overpressure valve that recirculates the delivery with the inlet when pressures over 5 bar are produced.

Specifications

Delivery pressure:	.5 bar
Flow rate:	> 155 litres/h
Power supply:	13.5 V - < 5 A
Coil resistance at 20°C:	28.5 Ohms

Figure 240

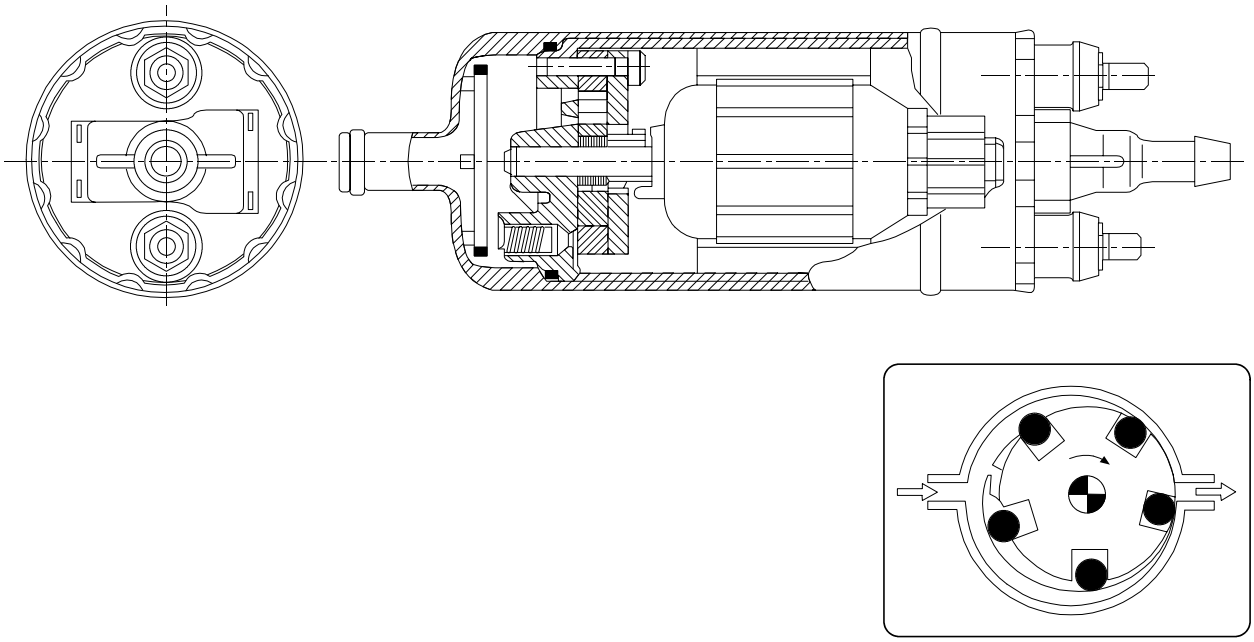

50707

CROSS-SECTION OF FUEL PUMP

542011 Fuel filter

Figure 241

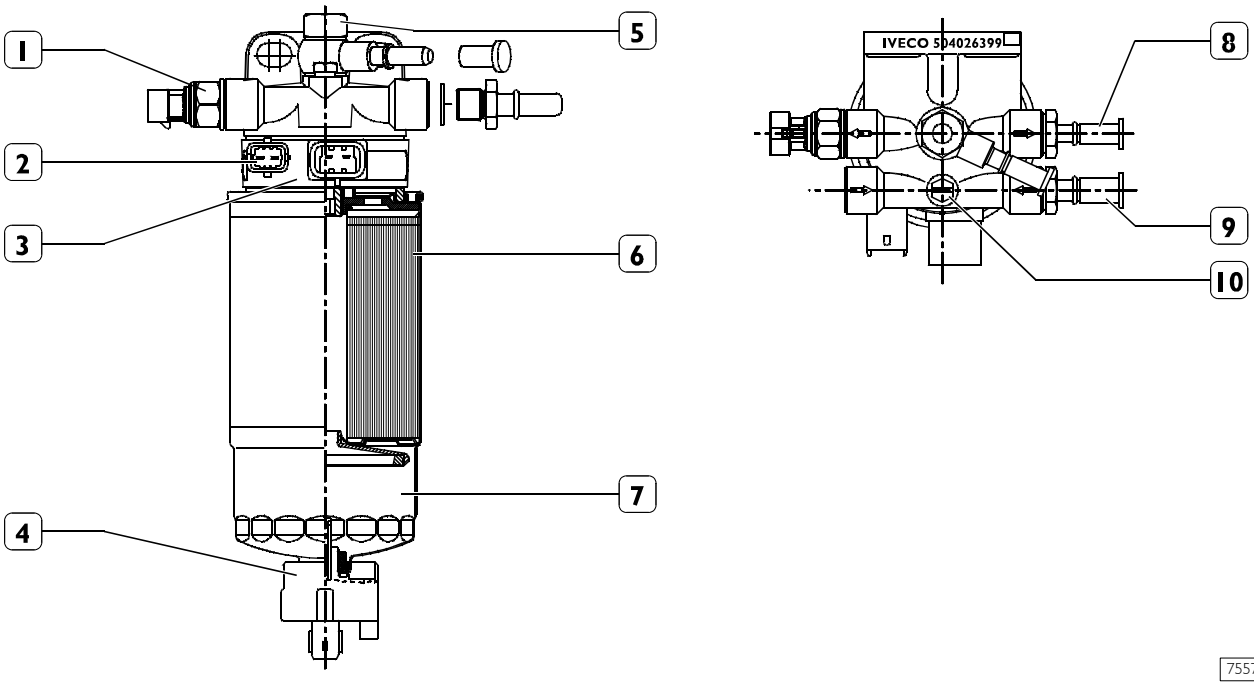

The fuel filter is composed of a cartridge (6) equipped with a water separator (7).
The water accumulation capacity (A) of the filter is approx. 100 cm^3.
The water indicator (4) is mounted on the bottom end. Unscrewing the indicator (4) drains off any water.
The fuel filter (6) is screwed onto the heater mounting (3) equipped with a clogging sensor (1), temperature sensor (2) and fuel check valve (5).
When the temperature of the diesel is less than 6°C, an electric heating element warms it up to at most 15°C before sending it to the pressure pump.

Check valve characteristics

opening pressure 0.5 bar $^{+0.05}_{-0.1}$

differential pressure less than 0.2 bar at 120 litres/h of fuel.

Clogging indicator characteristics

differential working pressure 1.1 bar

Tightening torques

1.	Clogging indicator tightening	20±2 Nm
4.	Water indicator	0.8±1.2 Nm
5.	Check valve tightening	25±2 Nm
6.	Fuel filter tightening	18±2 Nm
8.	Connector	35±2 Nm
9.	Connector	35±2 Nm
10.	Bleed screw	4 Nm

Fuel pipes

Figure 242

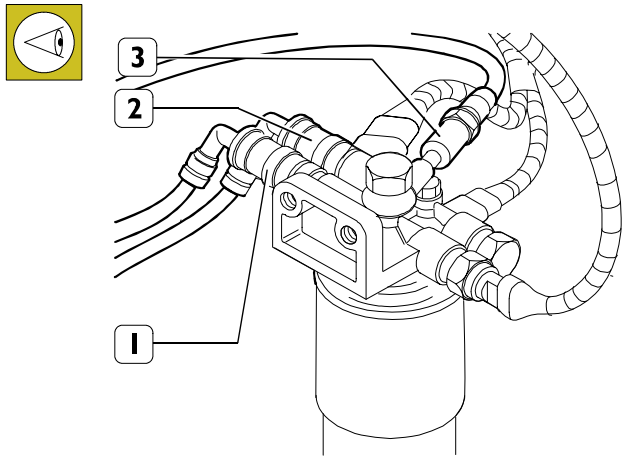

1. High-pressure pump supply pipe quick-coupling fitting – 2. Supply pipe quick-coupling fitting – 3. Fuel return pipe quick-coupling fitting – 4. Fuel filter mounting.

If disconnecting the fuel pipes (1-2-3) from the mounting (4), it is necessary, when refitting, to make sure their fittings are perfectly clean. This is to avoid an imperfect seal and fuel getting out.

775010 High-pressure pump

Figure 243

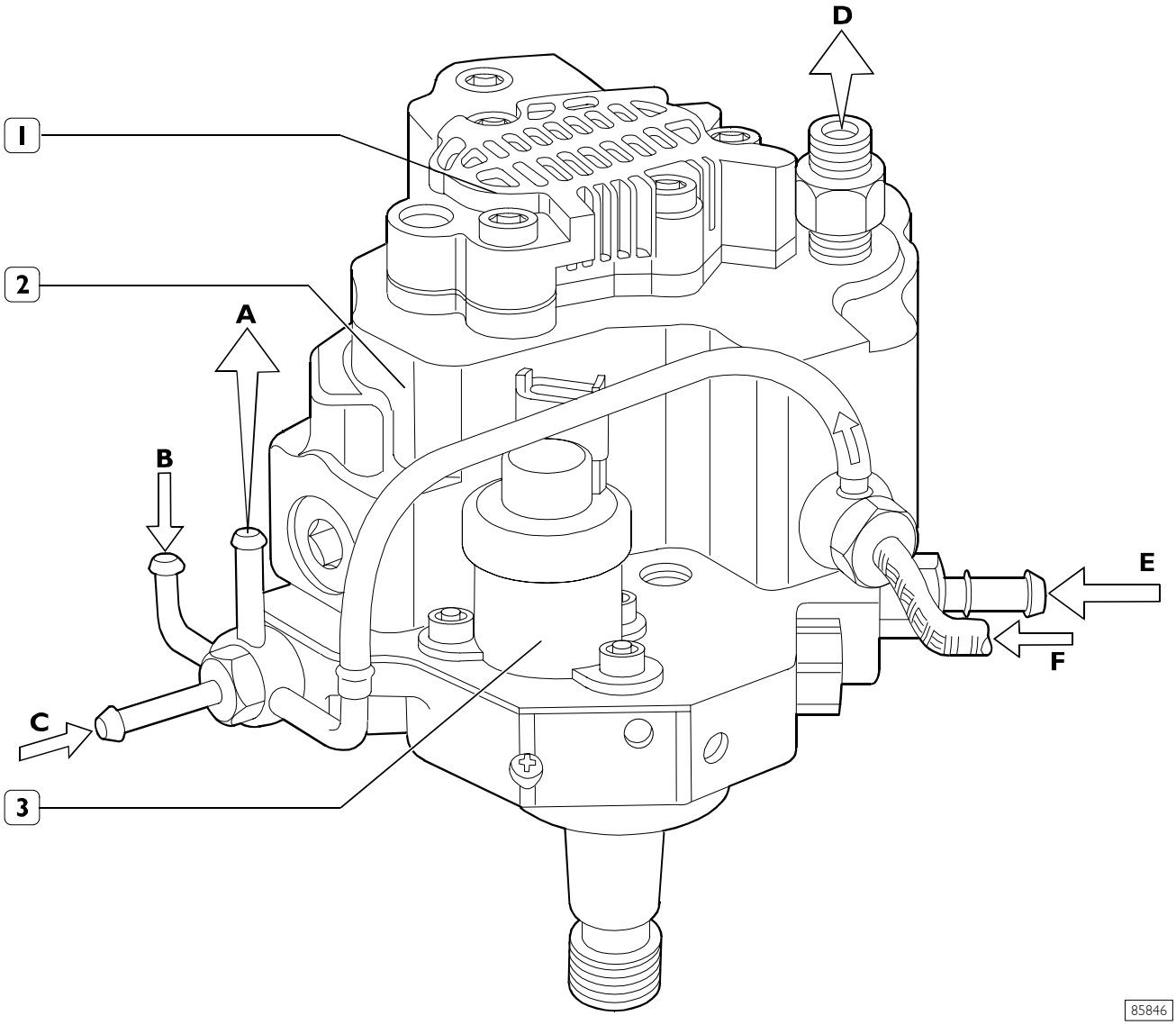

1. Mechanical feeding pump - 2. CP3 high pressure pump - 3. Pressure regulator A. To the tank - B. Return from rail - C. Return from fuel filter - D. Delivery to rail - E. From tank - F. Return to injectors.

Pump with 3 radial pumping elements controlled via a gear by the timing belt; it needs no timing. On the rear of the high-pressure pump there is the mechanical supply pump, controlled by the shaft of the high-pressure pump.
The pump is lubricated and cooled by the fuel.

The high-pressure pump – supply pump assembly cannot be overhauled and therefore the fixing screws must be neither removed nor tampered with. The only permissible job is replacing the driving gear.

Figure 244

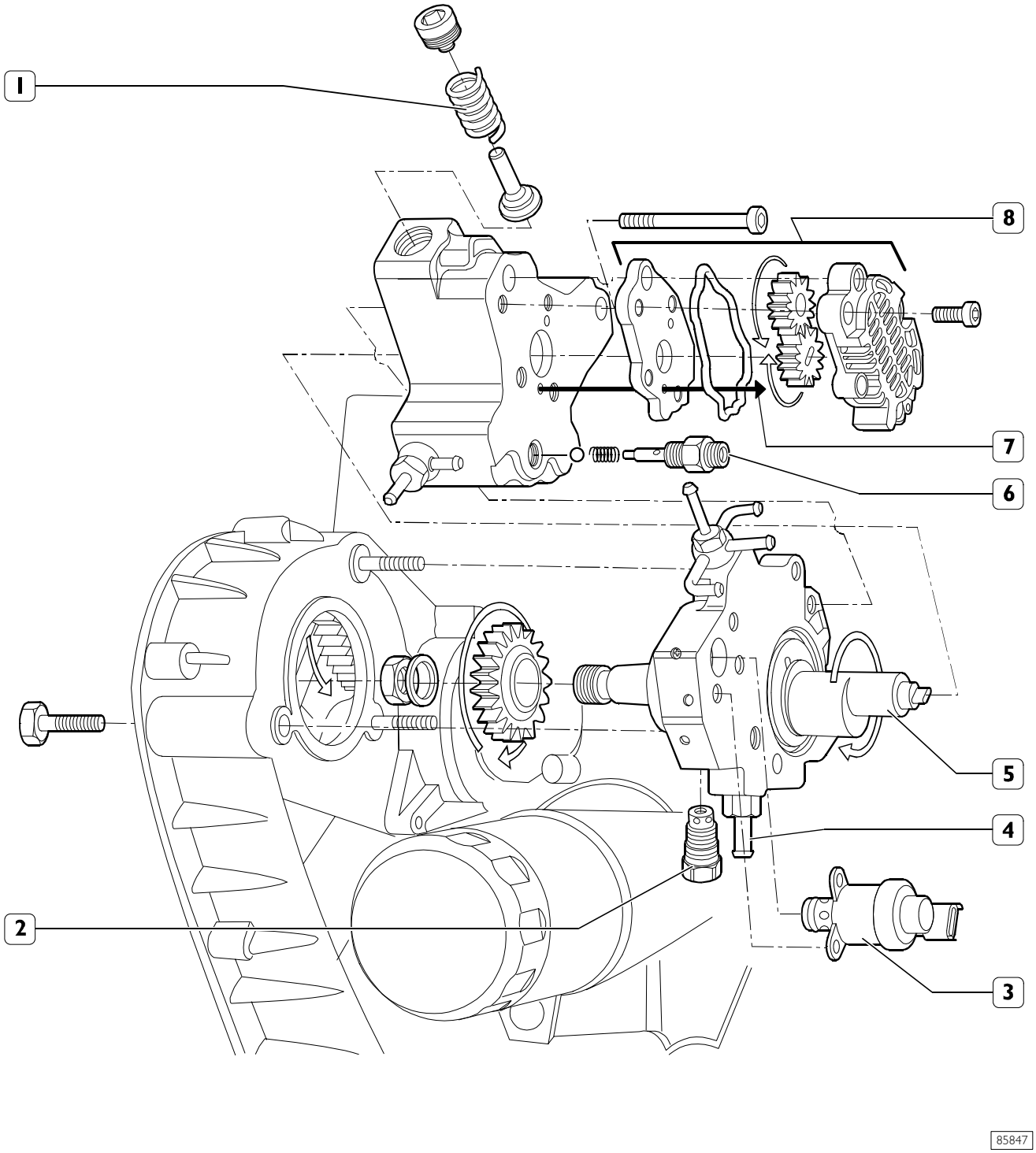

1 Delivery valve on single pumping element – 2. Relief valve 5 bar – 3. Pressure regulator – 4. Fuel inlet from filter – 5. Pump shaft – 6. Delivery valve to common rail – 7. Fuel return from high-pressure pump – 8. Mechanical supply pump.

High-pressure pump internal structure

Figure 245

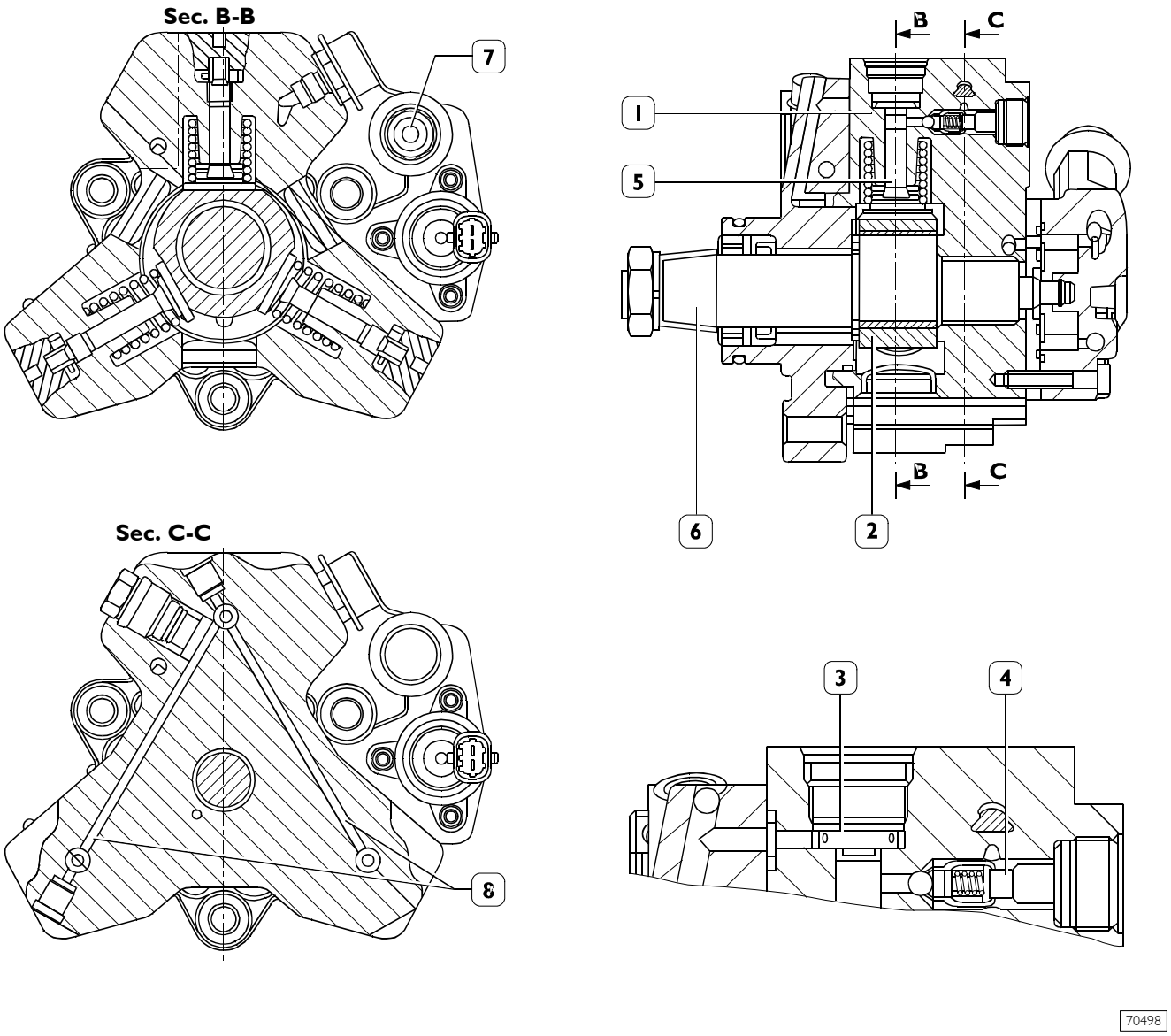

1. Cylinder – 2. Three-lobed element – 3. Plate intake valve – 4. Ball delivery valve – 5. Plunger – 6. Pump shaft – 7. Low-pressure fuel inlet – 8. Fuel ducts to supply pumping elements.

Each pumping assembly comprises:

- a plunger (5) operated by a three-lobed element (2) floating on the shaft of the pump (6). Since the element (2) floats on a misaligned portion of the shaft (6), during shaft rotation, it does not turn with it but is only shifted in a circular movement on a wider radius, with the result of working the three pumping elements alternately:
- a plate intake valve (3);
- a ball delivery valve (4).

Working principle

Figure 246

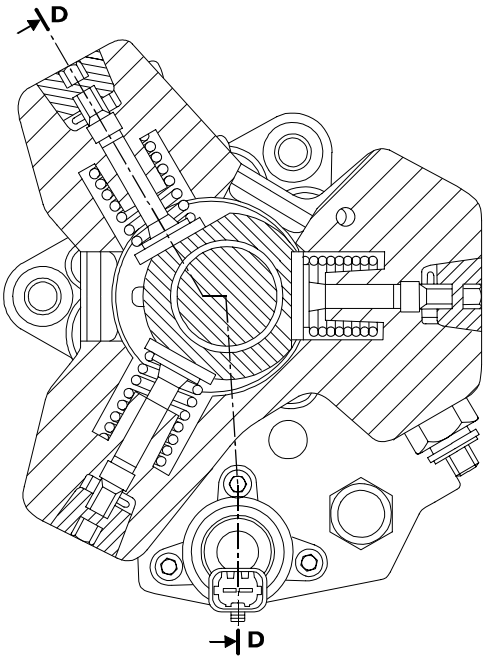

Sec. B - B

Figure 247

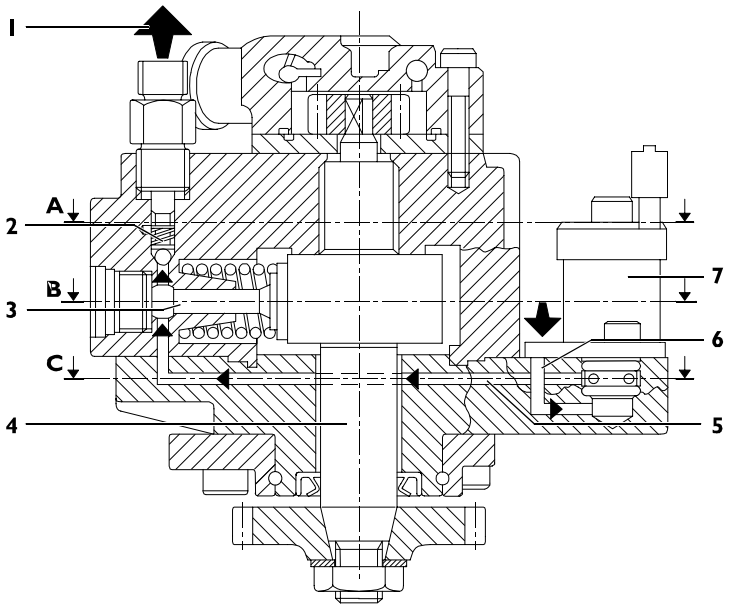

Sec. D - D

72597

1. Outlet for delivery to rail – 2. Delivery valve to rail – 3. Pumping element – 4. Pump shaft – 5. Pumping element supply duct – 6. Pressure regulator supply duct – 7. Pressure regulator.

The pumping element (3) is arranged on the cam on the pump shaft. In the suction phase, the pumping element is supplied through the supply duct (5). The amount of fuel to send to the pumping element is determined by the pressure regulator (7). The pressure regulator, on the basis of the PWM command received from the control unit, chokes the flow of fuel to the pumping element. During the compression phase of the pumping element, the fuel, on reaching such a pressure as to open the delivery valve to the common rail (2), supplies it through the outlet (1).

Figure 248

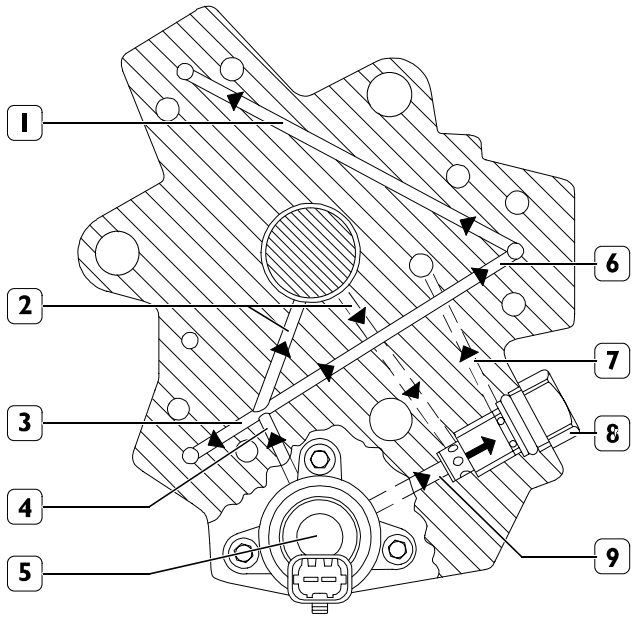

Sec. C – C (Figure 247)

72598

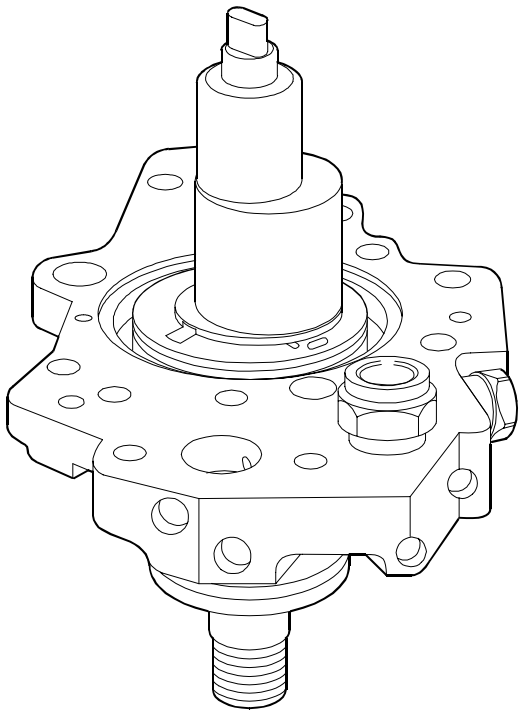

72599

1, 3, 6 Pumping element inlet – 2. Pump lubrication ducts – 4. Main pumping element supply duct – 5. Pressure regulator – 7. Regulator outlet duct – 8. Relief valve 5 bar – 9. Fuel outlet from regulator inlet.

Figure 248 shows the low-pressure fuel routing in the pump; it highlights the main supply duct of the pumping elements (4), the supply ducts of the pumping elements (1-3-6), the ducts used to lubricate the pump (2), the pressure regulator (5), the 5-bar relief valve (8) and the fuel outlet.

The pump shaft is lubricated by the fuel through the delivery and return ducts (2).

The pressure regulator (5) determines the amount of fuel with which to supply the pumping elements; excess fuel flows out through the duct (9).

The 5-bar relief valve, besides acting as a manifold for the fuel outlets, has the function of keeping the pressure constant at 5 bars at the regulator inlet.

Figure 249

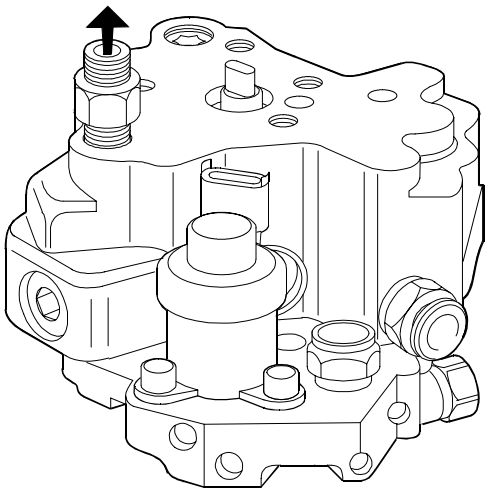

72600

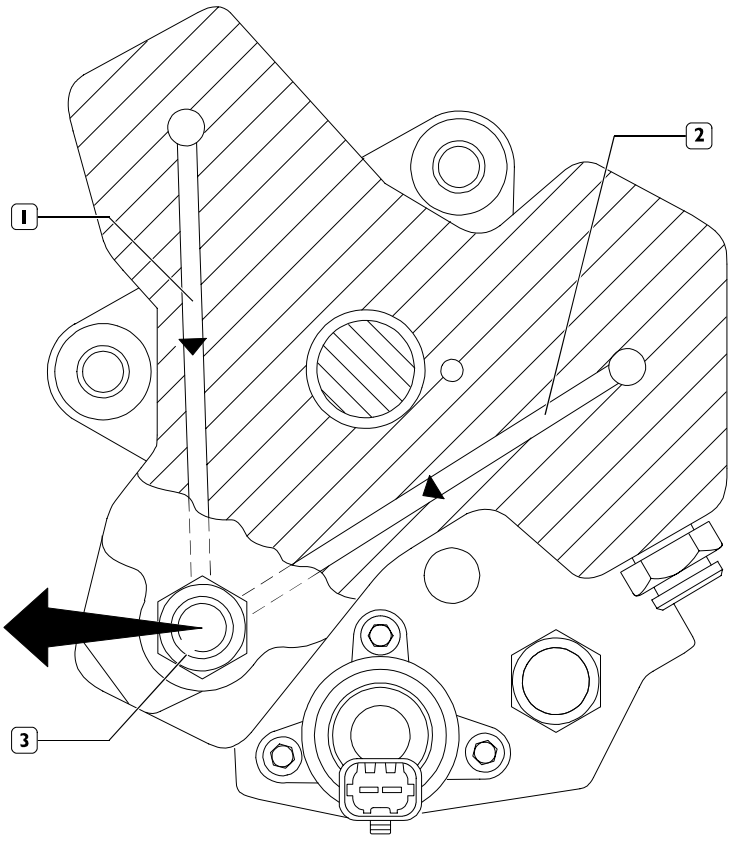

72601

Sec. A – A (Figure 247)

1, 2 Fuel outlet ducts – 3. Fuel outlet from the pump with coupling for high-pressure pipe for the common rail.

The figure shows the high-pressure fuel flow through the outlet ducts of the pumping elements.

771034 Pressure control valve

The fuel pressure regulator is mounted on the low-pressure circuit of the CP3 pump. The pressure regulator modulates the amount of fuel sent to the high-pressure circuit according to the commands received directly from the engine control unit. The pressure regulator is mainly composed of the following components:

- connector
- casing
- solenoid
- pre-load spring
- shutter cylinder.

When there is no signal, the pressure regulator is normally open, therefore with the pump providing maximum delivery. The engine control unit, via the PWM (Pulse Width Modulation) signal, modulates the change in fuel flow rate in the high-pressure circuit by partially closing or opening the sections of passage of the fuel in the low-pressure circuit.

Operation

Figure 250

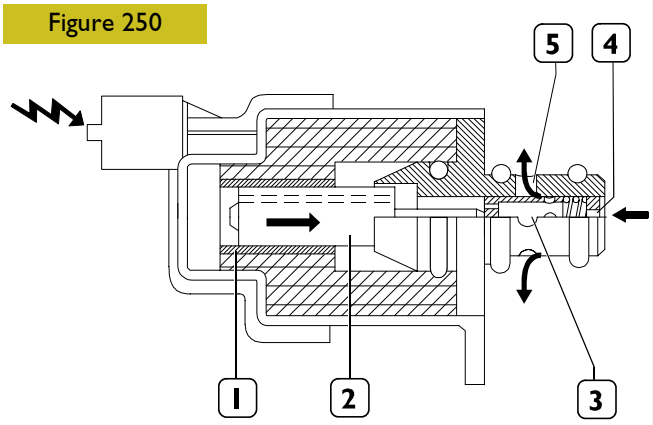

1. Solenoid – 2. Magnetic core – 3. Shutter cylinder – 4. Fuel inlet – 5. Fuel outlet.

When the engine control unit governs the pressure regulator (via PWM signal), the solenoid (1) is energized that, in its turn, generates the movement of the magnetic core (2). The shift of the core causes the shutter cylinder (3) to move axially, choking the flow of fuel.

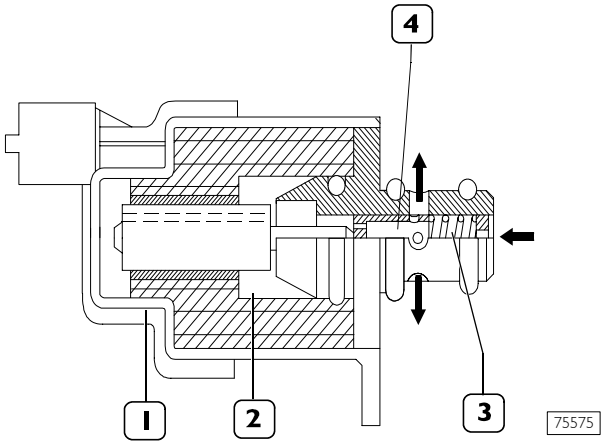

1. Solenoid – 2. Magnetic core – 3. Pre-load spring – 4. Shutter cylinder.

When the solenoid (1) is not energized, the magnetic core is pushed into the rest position by the pre-load spring (3). In this condition, the shutter cylinder (4) is in such a position as to offer the fuel the greatest section of passage.

MECHANICAL SUPPLY PUMP

Normal working condition

Figure 251

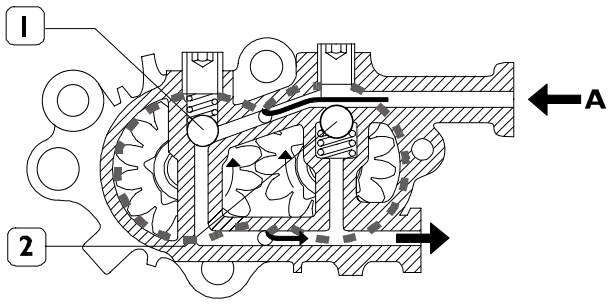

A. Fuel inlet from the tank – B. Fuel outlet to the filter – 1, 2 By-pass valves in closed position.

The function of the gear pump, mounted on the rear of the high-pressure pump, is to supply the high-pressure pump. It is governed by the shaft of the high-pressure pump.
In normal working conditions, the flow of fuel inside the mechanical pump is shown in the figure.

Conditions of outlet overpressure

Figure 252

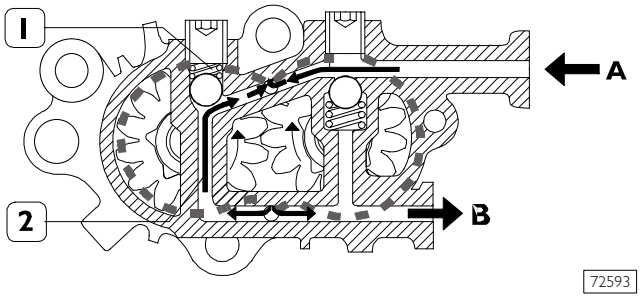

The by-pass valve (1) trips when overpressure is generated at the outlet B. The pressure, overcoming the elastic resistance of the spring of the valve (1), sets the outlet in communication with the inlet via the duct (2).

Conditions of bleeding

Figure 253

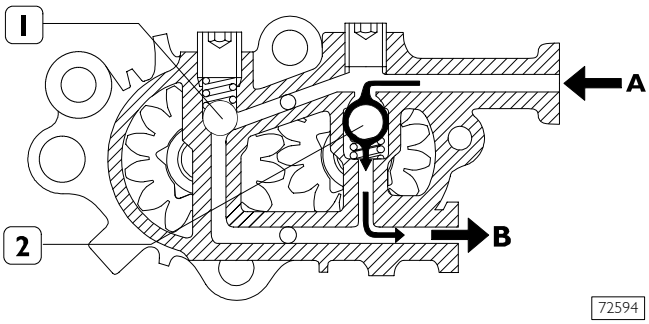

The by-pass valve (1) trips when, with the engine switched off, you want to fill the supply system via the priming pump. In this situation, the by-pass valve (2) opens, due to the effect of the inlet pressure, and the fuel flows out via the outlet B.

774510 Hydraulic accumulator (rail)

Figure 254

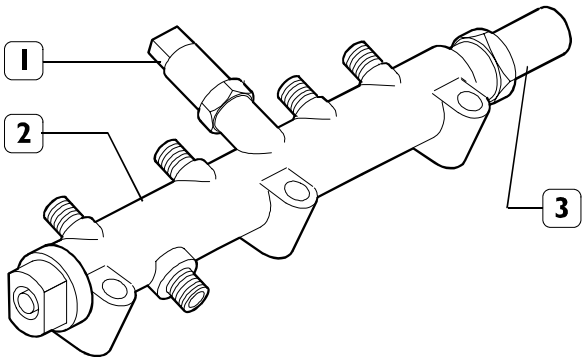

75576

The hydraulic accumulator is mounted on the cylinder head on the opposite side to the intake.

With its volume of approximately 22 cm^3 it dampens the pressure ripples of the fuel due to:

- the operation of the high-pressure pump;
- the opening of the electro-injectors.

The fuel pressure sensor (1) and pressure relief valve (3) are mounted on the hydraulic accumulator (2).

Pressure relief valve

Figure 255

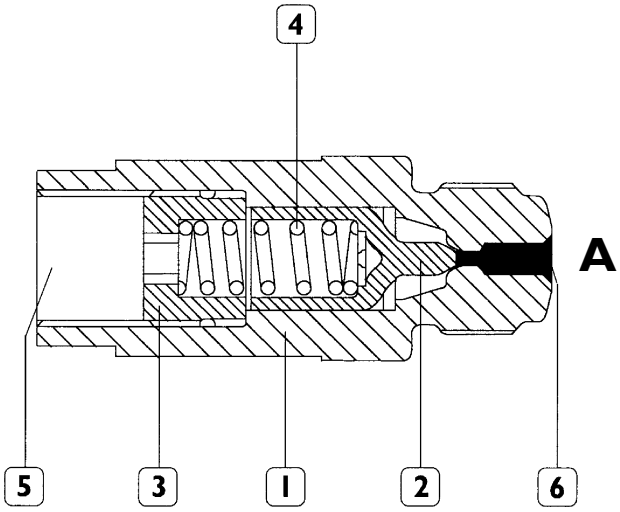

70500

1. Casing – 2. Plunger – 3. Stop – 4. Spring – 5. Direct outlet to tank – 6. Seat on rail.

The pressure relief valve protects the system components if the fuel pressure exceeds the setting: 1750 bars.

A. The tapered end of the plunger normally keeps the outlet to the tank shut.

Figure 256

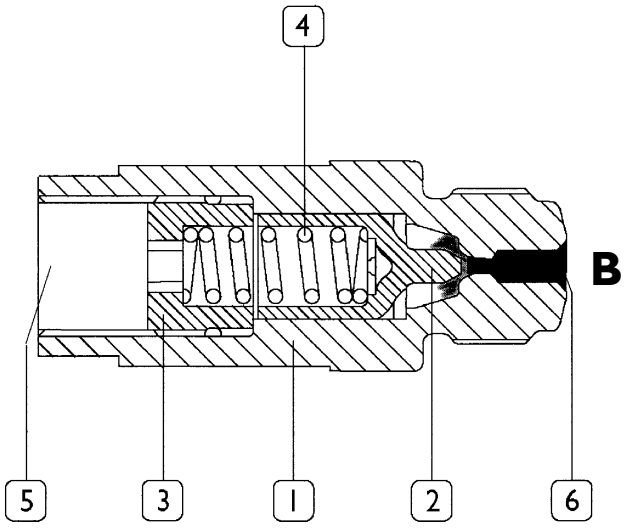

70502

B. If the pressure of the fuel in the hydraulic accumulator exceeds 1750 bars, the plunger gets shifted and the excess pressure is discharged into the tank.

775010 ELECTRO-INJECTORS

Figure 257

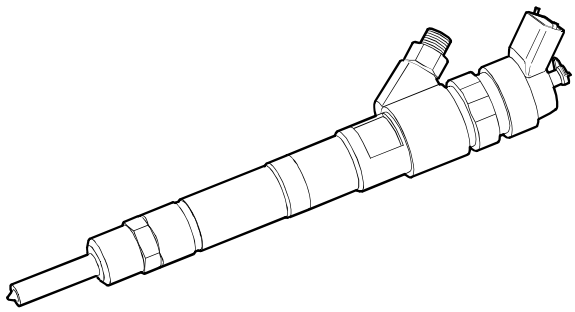

75588

The electro-injectors have high-pressure supply (up to 1600 bar) and recirculation at atmospheric pressure, necessary for the diesel used to operate the pilot valve.
The temperature of the diesel put back into circulation by the electro-injector can get very high (approximately 120°C).
The head of the electro-injector has a fitting for the electrical connector.
They are mounted on the cylinder head and operated by the injection control unit.

Figure 258

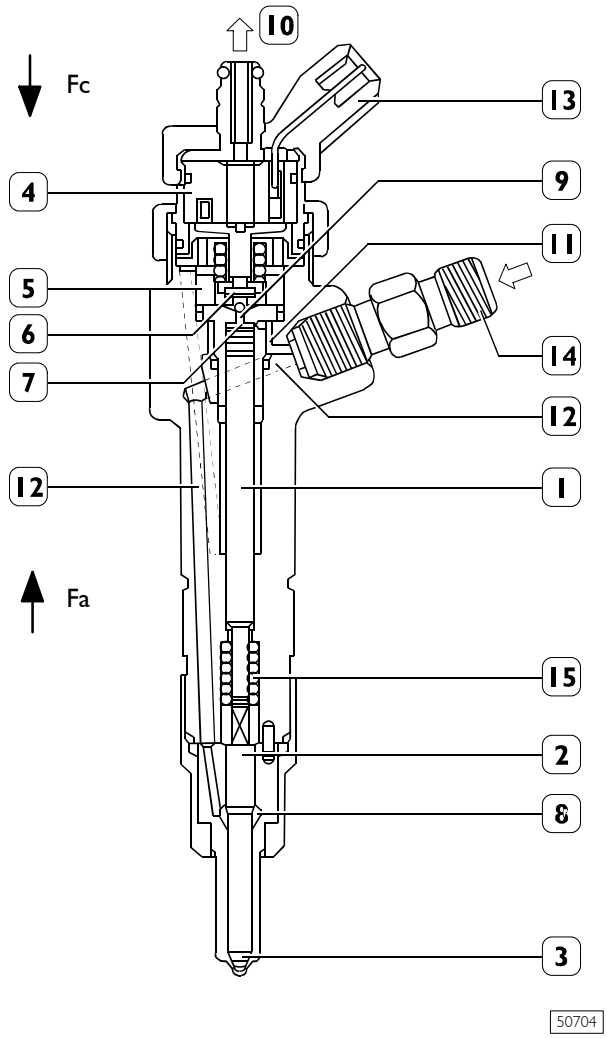

1 Pressure rod – 2 Pin – 3 Nozzle – 4 Coil – 5 Pilot valve – 6 Ball shutter – 7 Control area – 8 Supply volume – 9 Control volume – 10 Low-pressure fuel return – 11 Control pipe – 12 Supply pipe – 13 Electrical connection – 14 High-pressure fuel inlet fitting – 15 Spring.

The electro-injector can be divided into two parts:

- actuator/jet composed of pressure rod (1), pin (2) and nozzle (3);
- control solenoid valve composed of coil (4) and pilot valve (5).

Operation

Electro-injector operation can be broken down into three phases:

- "rest position"

The coil (4) is de-energized and the shutter (6) is in its closed position preventing fuel from entering the cylinder Fc > Fa (Fc: due to the line pressure acting on the control area 7 of the rod 1; Fa: due to the line pressure acting in the supply volume 8).

- "start of injection"

The coil (4) is energized and causes the shutter (6) to rise. The fuel of the control volume (9) flows off towards the return manifold (10) causing a drop in pressure in the control area (7).
At the same time, the line pressure through the supply pipe (12) applies a force Fa > Fc in the supply volume (8) causing the pin (2) to rise and consequently introduce fuel into the cylinders.

- "end of injection"

The coil (4) is de-energized and makes the shutter (6) return to its closed position. This recreates such a balance in the forces as to make the pin (2) return to its closed position and consequently end injection.

ELECTRIC/ELECTRONIC COMPONENTS

766161 Electronic control unit MS6.3

Figure 259

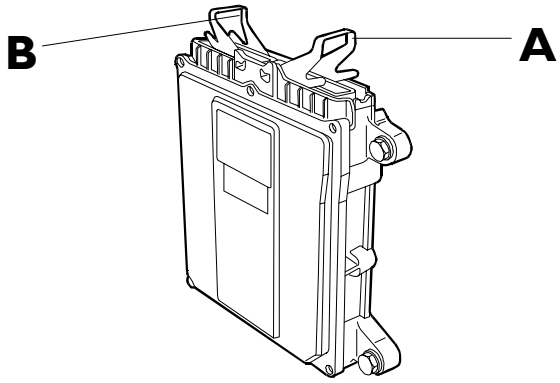

The control unit is a "flash EPROM" and so it can be reprogrammed from outside without changing the hardware. It processes the signals from the sensors by applying software algorithms and controls the actuators (especially the electro-injectors and pressure regulator).
The injection control unit has the absolute pressure sensor built in to further improve the control of the injection system. The control unit is mounted on the left-hand side of the engine bay and is connected to the vehicle's wiring harness by two 43-pin connectors:

- connector **A** for the components on the engine
- connector **B** for the components on the vehicle

In addition to handling the operation of the system described under the relevant heading, the electronic control unit is interfaced with the other electronic systems on the vehicles such as ABS – EBD cruise control, speed limiting device, immobilizer (IVECO CODE), EGR and glow plugs.

761917 Glow plug electronic control unit

Figure 260

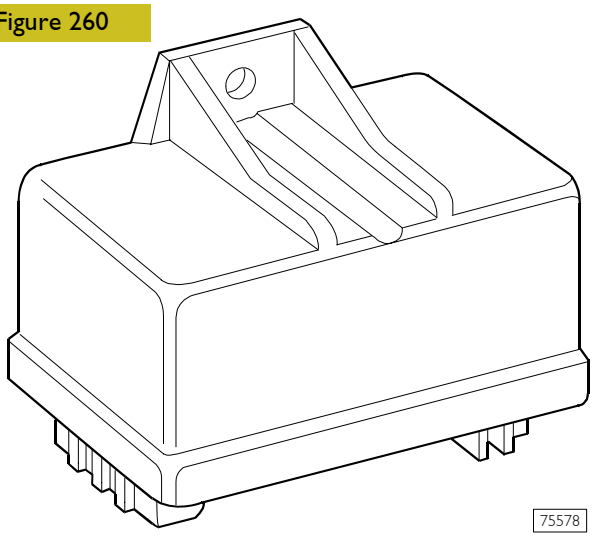

The EDC MS 6.3 engine control unit, in the phase of:

- starting
- after-starting

times the operation of the glow plug control unit according to the engine temperature.

Glow plug control takes place via the glow plug control unit according to the engine temperature.

Glow plug control takes place via the pre-heating control unit, under the direct control of the EDC MS 6.3 engine control unit.
The pre-heating control unit contains an "intelligent" contactor that sends feedback to the control unit that is thus informed about any fault with the pre-heating control unit or shorting to earth of the glow plugs.

761915 Glow plugs

Figure 261

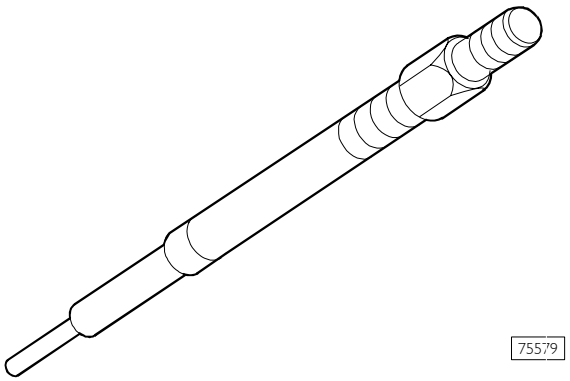

CONTROL VALUES

With a constant supply voltage of 11 V:

- max. current drawn	18 A
- in 5 sec.	11 ±1.5 A
- in 30 sec.	6 ±0.9 A
- temperature after 7 sec.	850°C
- tightening torque	8-10 Nm

SENSORS

Engine speed sensor

This is an inductive sensor and is positioned on the flywheel. It generates signals obtained from lines of magnetic flux that close through holes in the flywheel. There are 58 holes.
The electronic control unit uses this signal to measure the speed of rotation of the engine, its angular position and to operate the electronic rev counter.
If this signal fails the rev counter will not work.

Camshaft timing sensor

This is an inductive sensor positioned on the camshaft pulley. It generates signals obtained from lines of magnetic flux that close through a notch in the pulley.
The signal generated by this sensor is used by the electronic control unit as a redundant signal to measure the different engine speeds.

772655 Air temperature and pressure sensor

Positioned on the intake manifold, it measures the pressure of the turbocharging air introduced into the intake manifold.
This value, together with that of the air temperature sensor, makes it possible for the electronic control unit to calculate the exact quantity of air introduced into the cylinders so as to operate the injectors adjusting the fuel delivery, limiting harmful emissions, improving consumption and performance.
The sensor contains an electronic temperature correction circuit to optimize the pressure measurement in relation to the temperature of the intake air.

772656 Fuel temperature sensor

Integrated in the fuel filter, it measures the fuel temperature and transmits it to the electronic control unit.
When the fuel temperature is too high (ambient temperature condition, engine at full load and tank in reserve), correct lubrication of the high-pressure pump is no longer assured. On the basis of the values received, the control unit determines the density and volume of the fuel, correcting the delivery limiting engine performance.

774511 Fuel pressure sensor

This is mounted in the middle of the hydraulic accumulator (rail) and it has the task of providing feedback for the injection control unit to:

- adjust injection pressure
- adjust the duration of injection.

766161 Atmospheric pressure sensor

This is integrated in the electronic control unit. It provides a criterion of correction for the measurement of the air flow rate and to calculate the reference air flow rate to check the EGR.

764254 Engine coolant temperature sensor

This provides the control unit with an index of the thermal status of the engine in order to determine corrections for the fuel delivery, injection pressure, EGR injection advance when starting cold (if mounted) and warm-up.

505910 Throttle pedal position sensor

The accelerator pedal position sensor provides the control unit with a voltage value in proportion to the angle of operation of the pedal determining fuel delivery.

772641 Clutch pedal position sensor

Mounted on the pedal board, it provides the control unit with a positive signal when the clutch is engaged (pedal released). Every time the clutch is disengaged to change gear, the control unit fails to receive this signal and deactivates the Cruise Control function.

772642 Brake pedal position sensor

There are two of these sensors mounted on the pedal board. With the brake pedal released, they provide the control unit with a positive signal that is used to detect brake operation so as to deactivate the Cruise Control function and stop delivery of fuel.
In addition, a sensor switches on the brake lights.

764261 Vehicle speed sensor

This sensor, mounted on the gearbox by the drive output shaft, transmits the vehicle speed signal, through the electronic tachograph, to the control unit.

ACTUATORS

The injection system comprises three classes of actuators interlocked with the electronic control unit:

- ❑ electro-injectors (see relevant heading);
- ❑ regulators (see relevant headings) requiring PWM control (Pulse Width Modulation):
  - for pressure
  - EGR (if mounted)
  - turbocharger with variable geometry (if mounted);
- ❑ actuators with continuous ON/OFF signal to:
  - engage electromagnetic coupling for radiator cooling fan;
  - turn on/off air-conditioner compressor (if mounted);
  - Cruise Control;
  - starter heater control;
  - fuel filter heating;
  - electric supply pump.



All the power controls are made with relays located in the cab.

PWM (Pulse Width Modulation) controls

A PWM control has an active and an inactive state that alternate within a constant set length of time. During the active state the actuator control circuit is closed, which is thus powered with the control voltage; whereas, during the inactive state the circuit is open.
The duration of the two states may be varied with the condition that the sum of the two times is equal to the length of the modulation delivery.
The duration of the active state determines the duty-cycle, which is normally expressed as a percentage of the total time. Therefore, if the duration of the two active and passive states are the same, the duty-cycle is equal to 50%.
For reasons of diagnostics, the duty-cycle is limited between 1% and 99%; the control resolution is equal to 0.005% (1/20000 of the time).
The time length has been chosen taking account of the dynamic actuator response specifications.
Too low a carrier frequency could cause oscillations in the actuator, while too high a frequency would decrease control resolution.
The E.G.R. and variable geometry turbocharger (if mounted) are controlled through a vacuum modulating valve.

TROUBLESHOOTING

INTRODUCTION

During vehicle operation, the control unit can detect a series of electric faults. Each fault is associated to a failure code that will be stored in the ECU memory.

Failure codes can be read by connecting IVECO test tools to 38-pole diagnostic socket.

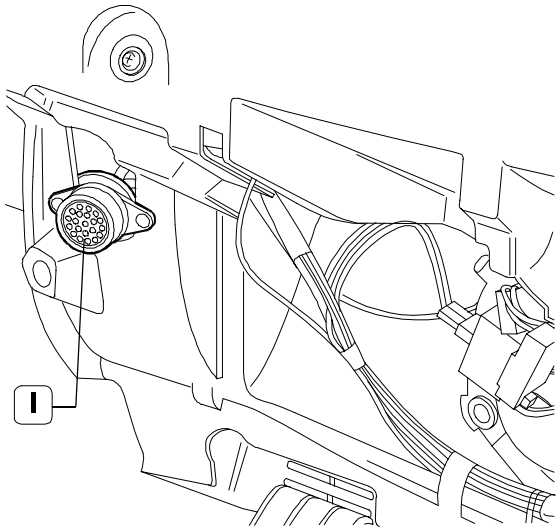

1. 38-pole diagnostic socket.

For the MS 6.3 ECU there is a code for each failure called blink Code, whereas for EDC 16 ECU a double failure code, called DTC and FMI will be stored.

The DTC code represents the failing component whereas the FMI code identifies the failure type.

Good diagnosis is made above all with the electronic diagnosis instruments developed by Iveco (Modus / IT2000 / IWT).

When the vehicle comes into the garage, the information provided by the driver is given due consideration, but the first thing to do is to hook up Modus / IT2000 / IWT and carefully run a full diagnosis:

- reading fault memory;
- reading parameters;
- engine test;
- etc.

Print the entire diagnosis outcomes, specially when Help Desk assistance is required.

The Help Desk will actually reject any demand of assistance if the workshop does not comply with the above procedure.

Here follows a GUIDE TO TROUBLESHOOTING drawn up by the engineers that have designed and implemented the Common Rail with MS 6.3 and EDC 16 ECUs.

Troubleshooting consists of two different sections:

- the first one, organised by Blink Codes for engine versions with MS 6.3 ECU and DTC-FMI for engine versions with EDC 16 ECU, concerns electric-electronic failures that can be directly detected by the control units.
- the second one for troubleshooting by symptoms describes possible trouble that cannot be identified by the electronic control unit. This kind of trouble is chiefly of a mechanical – hydraulic nature.

1st Section
for engine versions with MS 6.3 ECU

Blink code (on vehicles up to chassis No. 5383302/D187233)

With the key turned off, press the diagnosis button.

- Two sets of flashes of the EDC warning light with a short pause in between indicate the code number of the first error stored in memory.
- Press the button again to pass on to the next error.
- After reaching the last error, the first one is repeated.
- The list of errors contains all the errors stored in memory and not only the active ones.
- The order of presentation of the errors respects the chronological order in which they appeared.

The table gives the error codes.
To delete the list of errors from the control unit memory, follow this procedure:

- with the key turned off, press the diagnosis button;
- keeping the button pressed, turn the key on;
- keep the button pressed for 5 seconds;
- let go of the button;
- turn the key off.

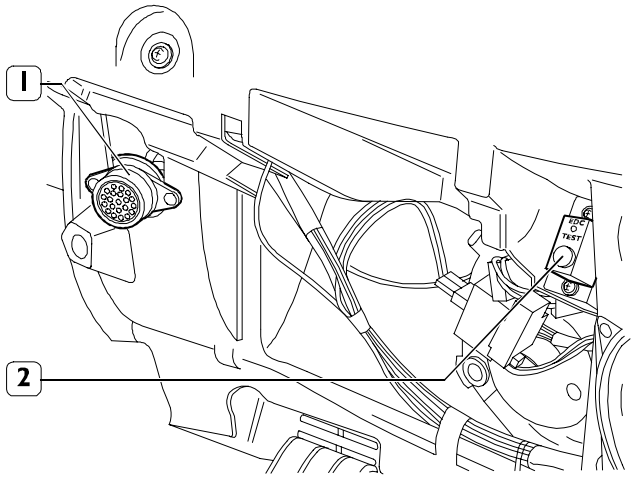

1. 38-pin diagnosis socket – 2. Blink code switch

The diagnosis socket (1) and the blink code switch are located in the glove compartment in front of the passenger's seat.

Blink code	Indicator light	Fault description	Power reduction
VEHICLE			
1.1	On	Vehicle speed	
1.2		(not used)	
1.3	Off	Cruise Control buttons	
1.4	Blinking	Throttle pedal	*
1.5	Off	Clutch switch	
1.6	On	Brake switch	
1.7	Off	Throttle/brake plausibility	Idling
1.8	Off	Main EDC / diagnosis indicator light	
1.9	Off	Air-conditioner control contactor	
ENGINE 1			
2.1	Blinking	Water temperature sensor	*
2.2	Off	Air temperature sensor	
2.3	On	Fuel temperature sensor	
2.4	Blinking	Turbocharging pressure sensor	*
2.5	Off	Atmospheric pressure sensor	
2.7	On	Fuel motor pump control contactor	
2.8	Off	Fuel filter heater control contactor	
2.9	On	Fan control contactor	
ENGINE 2			
3.1	Off	Cylinder 1 balancing	
3.2	Off	Cylinder 2 balancing	
3.3	Off	Cylinder 3 balancing	
3.4	Off	Cylinder 4 balancing	
3.5	Off	Battery voltage	
3.6	Off	Glow plug indicator light	
3.7	Off	Glow plug control contactor	
3.9	Off	Pre-heating monitoring	

Blink code	Indicator light	Fault description	Power reduction
ELECTRO-INJECTORS			
5.1	Blinking	Cylinder 1 injector solenoid valve	
5.2	Blinking	Cylinder 2 injector solenoid valve	
5.3	Blinking	Cylinder 3 injector solenoid valve	
5.4	Blinking	Cylinder 4 injector solenoid valve	
5.7	Blinking	Bank 1 (cylinders 1 – 4)	
5.8	Blinking	Bank 2 (cylinders 2 – 3)	
ENGINE SPEED			
6.1	Blinking	Crankshaft sensor	*
6.2	Blinking	Timing sensor	*
6.4	Off	Engine overspeed	
FUEL PRESSURE			
8.1	Blinking	Fuel pressure control	* or cutting out engine
8.2	Blinking	Fuel pressure sensor	*
8.3	Blinking	Pressure regulator solenoid valve	
8.5	On	EGR monitoring	
8.6	On	EGR solenoid valve	
8.7	On	Debimeter	
8.8	Off	Air temperature sensor (debimeter)	
CONTROL UNIT			
9.1	Blinking	Control unit error (Gate array)	* or cutting out engine
9.2	On	Control unit error (EEPROM)	
9.3	Blinking	EDC – Immobilizer communication	
9.4	On	Main contactor	
9.5	Off	After run test	
9.6	Blinking	Engine Stop Test (ECU)	
9.7	Blinking	Sensor power supply	* or cutting out engine
9.8	Blinking	Control unit error (Checksum)	Starting not possible
9.9	Blinking	Control unit error (Operating system)	Cutting out engine

(*) Cases when there is a power reduction.

BLINK CODE	EDC LAMP	POSSIBLE CAUSE	POSSIBLE TROUBLE	TESTS OR RECOMMENDED ACTION	NOTES
1.1	On	Vehicle speed sensor signal not plausible (circuit may be open or sensor defective).	The speedometer does not work (if the fault is between the sensor and the speedometer). Cruise Control / PTO are not working.	Read measurable parameters with the diagnostic instrument: when there is this error, the vehicle speed read on the control unit will be fixed on 5 km/h. Read fault memory with the diagnosis instrument: if the error is intermittent, check the connectors for an uncertain contact. If the error is present, perform the following checks: • If the speedometer doesn't work, use a multimeter to check the sensor power supply (12V) between its pin 1 and earth. If the power supply is correct, check the wiring between the sensor's pin 3 and the instrument panel's pin B1* (A22**), between the sensor's pin 2 and the instrument panel's pin B10* (A21**). • If the speedometer works but indicates an implausible speed, check the sensor is fitted properly, it is clean and its magnetic gap is correct. If the defect persists, check the wiring between the instrument panel's pin B5* (A20**) and the EDC connector's pin B14, and between the instrument panel's pin B13* (A1**) and the EDC connector's pin B4.	Error detected only with vehicle travelling and only in the event of a short circuit. If signal is not present no error is detected because the control unit considers vehicle to be at a standstill. * old code ** new code

Print 603.43.351

Base - 3rd Ed. - February 2002

BLINK CODE	EDC LAMP	POSSIBLE CAUSE	POSSIBLE TROUBLE	TESTS OR RECOMMENDED ACTION	NOTES
1.3	Off	Cruise Control / PTO control buttons not plausible.	Cruise Control / PTO and idling adjustment fail to work.	Read status parameters with the diagnosis instrument to identify the defective control (does not switch ON-OFF). Check the wiring from OFF (pin 4 drive control system) to EDC connector pin B32, RESUME (pin 5 drive control system) to EDC connector pin B25, from SET + button (pin 6 drive control system) to EDC connector pin B33, from SET – button (pin 3 drive control system) to EDC connector pin B1. Check there is voltage (approximately 12V) between pins 1, 2 and earth of the Cruise Controls. If the voltage is right and the wiring sound, but the fault remains, change the right-hand lever of the drive control system.	Not plausible if Set+ and Set- or Resume and Off are activated at the same time.
1.4	Blinking	Throttle pedal potentiometer shorted.	Power loss. Engine runs at fast idle speed (1500 rpm) with throttle pedal in rest position. Pressing the pedal causes the engine rpm to increase progressively and uncontrollably up to a reduced top speed (3900 rpm).	Read measurable parameters with the diagnostic instrument to check potentiometer malfunctioning (the signal does not change from 0% to 100%). Check the integrity of the potentiometer (R total = approx. 1 kOhm between pins 4 and 6), check the linear change in resistance of the potentiometer between pins 5 – 6 and 5 – 4 between the minimum and the maximum. If the potentiometer is working correctly, check the wiring between the pedal connector pin 6 and the EDC connector pin B27, between the pedal connector pin 4 and the EDC connector pin B35, between the pedal connector pin 5 and the EDC connector pin B2.	
1.4	Blinking	No signal from the throttle pedal potentiometer (circuit may be open).	Fast idling 1500 rpm in any pedal position.	Check the integrity of the potentiometer. If the potentiometer is sound, check the wiring between the potentiometer and the EDC control unit connector.	

BLINK CODE	EDC LAMP	POSSIBLE CAUSE	POSSIBLE TROUBLE	TESTS OR RECOMMENDED ACTION	NOTES
1.4	Blinking	Throttle pedal: implausible signal between idling switch and potentiometer.	Fast idling 1500 rpm in idling position and normal acceleration position when pressing the pedal.	Read status parameters with the diagnosis instrument to check the idling switch works properly. If the outcome is negative, use a multimeter on the component to check the integrity of the idling switch (ON-OFF switching between pins 3 and 2 of the pedal connector). If the switch is sound, look for a break in the wiring between the switch pin 2 and EDC connector pin B29, between switch pin 3 and EDC connector pin B13.	(The potentiometer signal is good and indicates the pedal has been released, but the switch status indicates the pedal is pressed.)
1.4	Blinking	Throttle pedal: implausible signal between idling switch and potentiometer.	Idling normal, but on pressing the pedal the engine speed settles on an intermediate fixed value.	Using a multimeter on the component, check the integrity of the potentiometer. If the potentiometer is sound, look for a break or short-circuiting in the wiring between the potentiometer and the connector.	(The potentiometer signal is good and indicates the pedal has been released, but the potentiometer signal indicates the pedal is pressed.)

Print 603.43.351

Base - 3rd Ed. - February 2002

BLINK CODE	EDC LAMP	POSSIBLE CAUSE	POSSIBLE TROUBLE	TESTS OR RECOMMENDED ACTION	NOTES
1.5	Off	Clutch switch: signal not plausible (at the EDC control unit it seems the speed of the vehicle has changed from 0 to at least 30 km/h without the clutch getting pressed) or not present.	Cruise Control / PTO fail to work.	Read status parameters with the diagnosis instrument to check correct switchover on pressing the pedal. If the result is negative, use a multimeter on the component to check continuity and switchover on pressing the pedal between pins 1 and 2. If the switch is sound, check the continuity of the wiring between switch pin 2 and EDC connector B38. With the key ON, check there is voltage (approx. 12V) between EDC pin B31 and earth. Also check the fuse 24 and the wiring between the switch pin 1 and pin 13 of fuse 24.	If everything turns out satisfactory with the check, the trouble could be with not pressing the clutch fully down (it is sometimes possible to change gear without operating the switch).
1.6	On	Brake switch – signals not plausible between primary and secondary.	Brake lights might not work. The Cruise Control / PTO fails to work.	Read status parameters with the diagnosis instrument to check correct and simultaneous switchover of the primary and secondary brake switches. If the outcome is negative, use a multimeter to check the integrity and correct switchover of the switches (one between pins 3 and 2 and the other between pins 1 and 2). If the switches are sound, with the key ON and the pedal pressed (brake lights on), check for approx. 12V on EDC pin B26 (secondary switch) and on EDC pin B31 (primary switch). If there is no voltage, check the wiring and the relays between the switches and EDC connector.	Check the pedal switches are fitted correctly (they must activate at the same time). If the trouble occurs too frequently, change both switches.

BLINK CODE	EDC LAMP	POSSIBLE CAUSE	POSSIBLE TROUBLE	TESTS OR RECOMMENDED ACTION	NOTES
1.7	Off	Throttle / brake pedal plausibility: simultaneous brake and throttle activation.	Engine speed drops down to idling. If the brake is applied with the throttle pressed, the engine drops down to idling until the brake is released so it is possible to stop the vehicle even if the throttle pedal jams in an intermediate position. Whereas, it is possible to accelerate with the brake pedal pressed without any safety mechanisms tripping.	Read parameters with the diagnosis instrument, check that the throttle pedal potentiometer signal resets on release, otherwise the driver might have pressed the brake and the throttle together.	This error is stored in memory only if the brake and throttle signals are integral. If the error is saved to memory when the pedals are not pressed, it is likely that one of the brake switches is stuck or shorted to +Batt. Make the user aware about using the pedals correctly.
1.8	Off	EDC lamp shorted or circuit open.	The EDC lamp fails to come on when turning the key ON or it stays on even with the key OFF.	Check continuity between the instrument panel pin B17 and EDC connector pin B23. Check that with the key ON there is approx. 12V between the instrument panel pin B16 and earth. Check the LED works between B16 and B17 on the instrument panel. Check continuity between the instrument panel pin B17 and EDC connector pin B23.	The operation of the indicator light is extremely important for the operation and integrity of the system. Make the user aware to check the indicator light works properly with each ignition (if there are no faults in memory, it has to come on for 2 sec. and then go out).

Print 603.43.351

Base - 3rd Ed. - February 2002

BLINK CODE	EDC LAMP	POSSIBLE CAUSE	POSSIBLE TROUBLE	TESTS OR RECOMMENDED ACTION	NOTES
1.9	Off	AC compressor control relay coil shorted to +Batt or to earth or circuit open.	The air-conditioning compressor is not disconnected when the EDC requires it.	Active diagnosis with the diagnostic instrument. If the outcome is negative, check that, with the key ON and engine off, between the EDC pin A35 and earth there is no voltage (if there is also 9.7, call the Help Desk to have the control unit replaced, if necessary). If the compressor does cut out, disconnect the relay 25337. If on disconnecting the relay the compressor stops, replace the relay. If the compressor never works, try replacing the relay and check continuity between the EDC connector pin A8 and earth.	If the circuit is open at pin A8 level 2.7-2.8-2.9 are saved to memory as well. The control unit only sees the integrity of the coil between pins 8 – 35 and not any stuck contacts. During active diagnosis, besides the relay tripping the compressor clutch must disconnect-reconnect.
2.1	Blinking	Water temperature sensor short-circuited or circuit open.	Less power (and noise as pre-injection is not implemented) in all cases. Engine cooling fan always on (if there is no temperature signal or it is not valid, in order to protect the engine the control unit turns on the fan).	Read measurable parameters with the diagnosis instrument to check plausibility between EDC water temperature and that signalled by the vehicle's instrument. Read parameters: if there is this error, the water temperature read on the control unit will be the same as that of the fuel. In the event of contrasting indications, use a multimeter to check the integrity of the sensor between its pins 1 and 2 (R = approx. 2.5 kOhm at 20°C). If the sensor is integral, check the wiring between the sensor and EDC connector pin A1-A30.	In the event of trouble with the wiring pin A30, simultaneous signalling of trouble with the fuel temperature sensor and indication (reading measurable parameters) of a fixed temperature of 60°C. In the event of a high temperature, check the engine cooling fan comes on and if necessary the contacts of relay 25336 and fuse no. 5.

BLINK CODE	EDC LAMP	POSSIBLE CAUSE	POSSIBLE TROUBLE	TESTS OR RECOMMENDED ACTION	NOTES
2.2	Off	Air temperature sensor on intake manifold short-circuited or circuit open.	The control unit calculates the fuel metering basing itself on a set temperature value. It is therefore possible to have slight decreases or increases in performance and smoke depending on the difference between the substitution temperature and the actual one.	Read measurable parameters with the diagnosis instrument: if there is this error, the turbocharging air temperature will be fixed at 20°C. If the temperature is fixed at 20°C, check the integrity of the sensor (R = approx. 2.5 kOhm at 20°C) pin 1 and 2. If the sensor is sound, check the wiring between the sensor and EDC connector pin A2-A19.	The temperature sensor is integrated with the pressure sensor.
2.3	On	Fuel temperature sensor short-circuited or circuit open.	The control unit calculates the fuel metering basing itself on the water temperature, but in this case there is no reaction the driver can detect.	Read measurable parameters: if there is this error, the fuel temperature will be the same as that of the water. If the temperature indicated has the same value as that of the water, check the integrity of the sensor (R = approx. 2.5 kOhm at 20°C). If the sensor is sound, check the wiring between the sensor and EDC connector pin A15-A30.	In the event of trouble with the wiring pin A30, simultaneous signalling of trouble with the water temperature sensor and indication (reading parameters) of a fixed temperature of 50°C. If the signal exceeds 85°C, reduction to 60% power, if it exceeds 90°C, reduction in injection pressure, if it exceeds 110°C, the error is stored in memory (even if the signal is sound). If the flight recorder reading detects too much time at high temperatures, make the user aware of not driving with the fuel tank level always low.

Print 603.43.351

Base - 3rd Ed. - February 2002

BLINK CODE	EDC LAMP	POSSIBLE CAUSE	POSSIBLE TROUBLE	TESTS OR RECOMMENDED ACTION	NOTES
2.4	Blinking	Air pressure sensor on intake manifold short-circuited or circuit open. Or waste-gate valve malfunctioning.	Decrease in power. Possible oscillation while driving with engine at full load.	Read measurable parameters with the diagnosis instrument: if there is this error, the value read on the control unit will be fixed on 2000 mbar. If the indicated value is fixed at 2000 mbar, check the wiring between the sensor and EDC connector A3 – A34. If the wiring is sound: Check that the waste-gate valve is not jammed shut or open.	The pressure sensor is integrated with the temperature sensor. If the waste-gate valve is jammed shut, there may be surging with the engine under load because: - power limitation trips when accelerating under load; - the turbocharging pressure drops; - the engine goes back to normal operation and the pressure increases; - limitation trips again; - etc. If the turbocharging pressure really is too high, there is a risk of turbine over-revving with its associated damage.
2.5	Off	Ambient pressure sensor short-circuited or circuit open.	Possibly some black smoke at altitude, especially with EGR (it is not excluded at altitude).	The sensor is integrated in the EDC control unit and cannot be replaced on its own.	Any painting on the engine/control unit may prevent the ambient pressure getting measured correctly.
2.7	On	Fuel motor pump relay coil short-circuited or circuit open.	Fuel motor pump always on even with key OFF. The battery discharges. Early deterioration of the motor pump. Or	Active diagnosis of the relay with the diagnosis instrument. Take out the relay 25837, located in the contactor control unit (left-hand side of driver). If the pump cuts out, replace the relay. If the pump does not cut out, check the wiring between 87 of the relay and battery positive.	You hear the noise of the pump turning continuously, even with the key off.

BLINK CODE	EDC LAMP	POSSIBLE CAUSE	POSSIBLE TROUBLE	TESTS OR RECOMMENDED ACTION	NOTES
			The engine starts with difficulty and fails to reach its top performance.	If the motor pump fails to work, check the continuity of the coil between pin A7 and A8 of the EDC connector. In addition, check the wiring between the EDC connector pin A7 and relay 86, EDC connector pin A8 and relay 85.	
2.8	Off	Fuel filter heater relay defective.	Heater always on even with fuel temperature > 5°C. The battery discharges. Heater fails to come on even with fuel temperature < 5°C. Filter may be clogged due to the fuel paraffining with harsh outdoor temperatures (< -15°C).	Active diagnosis of the relay with the diagnosis instrument. Check continuity of the coil between the EDC connector pin A32 and relay pin A8. In addition, check the wiring between the EDC connector pin A32 and relay 86, EDC connector pin A8 and relay 85. Check the continuity of the coil between the EDC connector pin A32 and relay A8. In addition, check the wiring between pins A32 of the control unit and relay 86, control unit A8 and relay 85.	2.3 may get stored in memory since the fuel gets too warm. Starting may be difficult with very cold temperatures. Engine starting may produce too much smoke.
2.9	On	Fan relay coil short-circuited or circuit open.	Increase in fuel consumption. Engine cooling fan always on even with engine cold. Or	Active diagnosis of the relay with the diagnosis instrument. Check coil continuity between EDC connector pin A39 and relay A8. In addition, check the wiring between the EDC connector pin A39 and relay 86, EDC connector pin A8 and relay 85.	In active diagnosis, besides the relay activating, you hear the fan's electromagnetic clutch cutting in and out.

Print 603.43.351
Base - 3rd Ed. - February 2002

BLINK CODE	EDC LAMP	POSSIBLE CAUSE	POSSIBLE TROUBLE	TESTS OR RECOMMENDED ACTION	NOTES
			Engine overheating and accordingly possible power limitation. Engine cooling fan fails to work.	Check coil continuity between EDC connector pin A39 and relay A8. In addition, check the wiring between the EDC connector pin A39 and relay 86, EDC connector pin A8 and relay 85.	
3.1	Off	Injector no. 1 unbalanced.	Injector inefficient. There may be irregular rotation and smoke.	Engine test, cylinder efficiency test. Check the wiring and connections between the injector and the EDC connector pin A12 and A40. If the wiring is good, perform the compression test with the diagnosis instrument. If the compression in cylinder no. 1 is OK, replace the injector.	The control unit has to modify the signal to injector no. 1 (Cylinder Balancing) too far beyond the normal value.
3.2	Off	Injector no. 2 unbalanced.	Injector inefficient. There may be irregular rotation and smoke.	Engine test, cylinder efficiency test. Check the wiring and connections between the injector and the EDC connector pin A10 and A43. If the wiring is good, perform the compression test with the diagnosis instrument. If the compression in cylinder no. 2 is OK, replace the injector.	The control unit has to modify the signal to injector no. 2 (Cylinder Balancing) too far beyond the normal value.
3.3	Off	Injector no. 3 unbalanced.	Injector inefficient. There may be irregular rotation and smoke.	Engine test, cylinder efficiency test. Check the wiring and connections between the injector and the EDC connector pin A23 and A42. If the wiring is good, perform the compression test with the diagnosis instrument. If the compression in cylinder no. 3 is OK, replace the injector.	The control unit has to modify the signal to injector no. 3 (Cylinder Balancing) too far beyond the normal value.

BLINK CODE	EDC LAMP	POSSIBLE CAUSE	POSSIBLE TROUBLE	TESTS OR RECOMMENDED ACTION	NOTES
3.4	Off	Injector no. 4 unbalanced.	Injector inefficient. There may be irregular rotation and smoke.	Engine test, cylinder efficiency test. Check the wiring and connections between the injector and the EDC connector pin A24 and A41. If the wiring is good, perform the compression test with the diagnosis instrument. If the compression in cylinder no. 4 is OK, replace the injector.	The control unit has to modify the signal to injector no. 4 (Cylinder Balancing) too far beyond the normal value.
3.5	Off	Battery voltage too low (or recognized as such by the EDC control unit).	Fast idling up to 1250 rpm (depending on the voltage detected) with pedal released.	Check the efficiency of the batteries and recharging circuit, the efficiency of the earth points and that there are no deposits or oxidation on the connectors.	The engine cuts out or fails to start if the battery voltage < 6.5V.
3.6	Off	Pre-heating indicator lamp short-circuited or defective.	a) Pre-heating indicator light always on. b) Pre-heating indicator light always off.	Perform active diagnosis of the indicator light with the diagnosis instrument. Check the wiring between the EDC connector pin B21 and the vehicle's panel B6* (A30**). Check for power between pins B16* (A14**) of the vehicle's panel and earth.	Even at low ambient temperatures, the driver fails to wait for pre-heating as no information is provided by the indicator light. * old code ** new code

Print 603.43.351

Base - 3rd Ed. - February 2002

BLINK CODE	EDC LAMP	POSSIBLE CAUSE	POSSIBLE TROUBLE	TESTS OR RECOMMENDED ACTION	NOTES
3.7	Off	Glow plug relay short-circuited or circuit open.	Shorted to +Batt or circuit open: the glow plugs do not work, starting may be difficult and smokiness on starting. Shorted to earth: the glow plugs are always powered (short life).	Check the wiring of the EDC connector pin B42 to find the shorting to +Batt or to earth or the break in the circuit. Check the integrity of the pre-heating control unit. Check the 60A fuse connected between the battery positive and the pre-heating control unit connector pin 30. Check the power supply is correct on pin 86 of the pre-heating control unit and on the EDC connector pin B42. Check the earth connection of the pre-heating control unit pin 31.	
3.9	Off	Glow plugs short-circuited or circuit open.	Starting difficult with very rigid outdoor temperatures. Smokiness on starting.	Check the integrity of the single glow plugs. Check the glow plug power supply between the pre-heating control unit connector pin G1 – G2 – G3 – G4 and earth. If all OK, change the pre-heating control unit.	
5.1	Blinking	Electro-injector cylinder no. 1 shorted to +Batt. or shorted to earth or circuit open.	Drop in power made by the EDC control unit. The engine runs on 2 cylinders. Possibly 3.1. The engine runs on 3 cylinders.	Check the wiring and connections between the injector and the EDC connector pin A12 – A40. If the wiring is good, change the injector.	

BLINK CODE	EDC LAMP	POSSIBLE CAUSE	POSSIBLE TROUBLE	TESTS OR RECOMMENDED ACTION	NOTES
5.2	Blinking	Electro-injector cylinder no. 2 shorted to +Batt. or shorted to earth or circuit open.	Drop in power made by the EDC control unit. The engine runs on 2 cylinders. Possibly 3.2. The engine runs on 3 cylinders.	Check the wiring and connections between the injector and the EDC connector pin A10 – A43. If the wiring is good, change the injector.	
5.3	Blinking	Electro-injector cylinder no. 3 shorted to +Batt. or shorted to earth or circuit open.	Drop in power made by the EDC control unit. The engine runs on 2 cylinders. Possibly 3.3. The engine runs on 3 cylinders.	Check the wiring and connections between the injector and the EDC connector pin A23 – A42. If the wiring is good, change the injector.	
5.4	Blinking	Electro-injector cylinder no. 4 shorted to +Batt. or shorted to earth or circuit open.	Drop in power made by the EDC control unit. The engine runs on 2 cylinders. Possibly 3.4. The engine runs on 3 cylinders.	Check the wiring and connections between the injector and the EDC connector pin A24 – A41. If the wiring is good, change the injector.	
5.7	Blinking	Power stage to supply the electro-injectors of cylinders 1 and 4 (in control unit) defective.	Possibly 3.1 – 3.4. The engine runs on 2 cylinders	Delete the fault memory and try again. If the error remains and only after excluding the injector 1 or 4 defect, call the Help Desk and follow their instructions to replace the control unit if necessary.	

Print 603.43.351

Base - 3rd Ed. - February 2002

BLINK CODE	EDC LAMP	POSSIBLE CAUSE	POSSIBLE TROUBLE	TESTS OR RECOMMENDED ACTION	NOTES
5.8	Blinking	Power stage to supply the electro-injectors of cylinders 2 and 3 (in control unit) defective.	Possibly 3.2 – 3.3. The engine runs on 2 cylinders	Delete the fault memory and try again. If the error remains and only after excluding the injector 2 or 3 defect, call the Help Desk and follow their instructions to replace the control unit if necessary.	
6.1	Blinking	Crankshaft sensor: no signal or implausible signal.	The engine will not start cold, it could start warm with difficulty. With the engine running, power reduction and increased noise.	Check the integrity of the sensor (R = approx. 850 Ohm). If the sensor is sound, check the wiring between the sensor and EDC connector pin A29 – A37. Check the sensor is fastened properly.	If there is no crankshaft signal, the camshaft sensor speed signal is used instead. Power reduction (and noise reduction because the control unit cannot manage advance and duration of injection and bases itself on a recovery map. Pre-injection is not implemented).
6.2	Blinking	Camshaft sensor: no signal or implausible signal.	The engine will not start cold, it could start warm with difficulty. With the engine running, power reduction and increased noise. False injections during starting and smoke at the exhaust.	Check the integrity of the sensor (R = approx. 850 Ohm). If the sensor is sound, check the wiring between the sensor and EDC connector pin A4 – A31. Check the sensor is fastened properly.	If there is no camshaft signal, the flywheel sensor timing signal is used instead.
6.4	Off	The engine has over-revved (over 5500 rpm), probably driven, or crankshaft sensor signal not plausible (in this case, error 6.1 signalled).	If the over-revving occurred when driven, the driver can detect no reaction (other than the indicator light blinking).	Data saved to memory, check the duration and frequency of the over-revving. Delete the fault memory.	Make the driver aware about using the vehicle correctly.

BLINK CODE	EDC LAMP	POSSIBLE CAUSE	POSSIBLE TROUBLE	TESTS OR RECOMMENDED ACTION	NOTES
8.1	Blinking	Pressure in rail too great. The electric command fails to reach the pressure regulator.	The engine cuts out, loud noise before cutting out.	Check that the connector on the pressure regulator is connected. If it is connected, check the wiring between the regulator and the EDC connector pin A9 – A20.	After a few times, the pressure relief valve might remain open, in which case it has to be changed.
8.1	Blinking	Pressure in rail too great. Pressure regulator mechanically jammed open.	The engine cuts out, loud noise before cutting out.	Perform the high-pressure test with the diagnosis instrument. If the outcome is negative, replace the high-pressure pump – regulator assembly.	After a few times, the pressure relief valve might remain jammed open, in which case it has to be changed.
8.1	Blinking	Pressure in rail too low. Pressure regulator mechanically jammed shut.	The engine cuts out or fails to start.	Perform the high-pressure test with the diagnosis instrument. If the outcome is negative, replace the high-pressure pump – regulator assembly.	
8.1	Blinking	Pressure in rail too low. Shorting to +Batt. on the pressure regulator.	The engine cuts out or fails to start.	Check the wiring between the regulator and EDC connector pin A9 – A20.	
8.1	Blinking	Pressure in rail too low. High-pressure pump defective.	The engine cuts out or fails to start.	Perform the high-pressure test with the diagnosis instrument. If the outcome is negative, replace the high-pressure pump together with the regulator.	
8.1	Blinking	Injector mechanically jammed open.	The engine cuts out or fails to start.	Perform the cylinder efficiency test with the diagnosis instrument. If the outcome is negative, replace the defective injector.	
8.1	Blinking	Pressure in rail too low. Major fuel leak from the high-pressure circuit.	The engine cuts out or fails to start.	Check the high-pressure circuit and eliminate the leak (beware, there could be a leak inside the head between the high-pressure union and the injector).	

Print 603.43.351

Base - 3rd Ed. - February 2002

BLINK CODE	EDC LAMP	POSSIBLE CAUSE	POSSIBLE TROUBLE	TESTS OR RECOMMENDED ACTION	NOTES
8.1	Blinking	Pressure in rail too low. Fuel supply problem in the low-pressure circuit.	The engine cuts out or fails to start.	Check the motor pump works properly, check for any clogging in the filter and pre-filter, crushed or leaking pipes, and check the fuel supply gear pump works properly.	
8.2	Blinking	Rail pressure sensor short-circuited or circuit open.	The engine cuts out.	Check the sensor is powered correctly. If the power supply is correct (approx. 5V) change the sensor. If it is greater than approx. 5V, check the wiring between the sensor and the EDC connector pin A33-A6.	
8.3	Blinking	Pressure regulator short-circuited or circuit open.	If shorted to +Batt., the pressure in the rail drops too much, the engine cuts out and fails to restart. Or If shorted to earth or the circuit is open, the pressure in the rail rises above the maximum value and the engine cuts out.	Check the wiring between the pressure regulator and the EDC connector pin A9 – A20. Check the wiring between the pressure regulator and the EDC connector pin A9 – A20.	8.1 – 8.2 may also be signalled. 8.1 may also be signalled.

BLINK CODE	EDC LAMP	POSSIBLE CAUSE	POSSIBLE TROUBLE	TESTS OR RECOMMENDED ACTION	NOTES
8.5	On	EGR monitoring: incorrect implementation of EGR percentage calculated by the control unit.	EGR is turned off. Emissions not conforming to legislation. Poor performance and smokiness at high engine speeds.	Check that the EGR pneumatic valve is not jammed shut or open (or intentionally tampered with). Check that the pipe between the solenoid valve and EGR pneumatic valve is not crushed, perforated or disconnected. Check the EGR solenoid valve works properly (active diagnosis with the diagnostic instrument). Using a multimeter, check the integrity of the solenoid valve. If the solenoid valve is sound, check the wiring between the solenoid valve and the EDC connector pin A25 – A8.	If there is a defect on the wiring of pin A8, the errors associated with all the devices connected to this pin will be saved to memory.
8.6	On	EGR solenoid valve short-circuited or circuit open.	EGR doesn't work or works constantly. Emissions not conforming to legislation. No reaction the driver can detect.	Check the EGR solenoid valve works properly (active diagnosis with the diagnostic instrument). Using a multimeter, check the integrity of the solenoid valve. If the solenoid valve is sound, check the wiring between the solenoid valve and the EDC connector pin A25 – A8.	If there is a defect on the wiring of the EDC connector pin A8, the errors associated with all the devices connected to this pin will be saved to memory.
8.7	On	Debimeter short-circuited or circuit open.	Power reduction and EGR function turned off.	Check the integrity of the debimeter and the wiring between the debimeter connector and the EDC connector pin A17 – A18 – A26 – A28.	
8.8	Off	EGR air temperature sensor short-circuited or circuit open.	No reaction the driver can perceive.	Read measurable parameters with the diagnosis instrument: in the event of this trouble, the ambient temperature read on the control unit will be fixed on 30°C. Check the wiring between the debimeter and EDC connector pin A5 – A18.	

Print 603.43.351

Base - 3rd Ed. - February 2002

BLINK CODE	EDC LAMP	POSSIBLE CAUSE	POSSIBLE TROUBLE	TESTS OR RECOMMENDED ACTION	NOTES
9.1	Blinking	Defect inside the control unit.	The engine cuts out or fails to start. In some cases, it might not cut out, but go onto the power reduction level.	Delete the fault memory. If the error remains, call the Help Desk and follow their instructions to replace the control unit if necessary.	This may occur when the power supply to the control unit is cut off without using the key. Perhaps no defect has been saved to memory, it depends on the state of defectiveness of the control unit.
9.2	On	EEPROM defect in control unit.	The data are not saved to memory when turning off the engine. The fault memory is lost, it is only possible to read the faults that are present but not the intermittent ones. Any idling speed set with the Cruise Control commands is not stored in memory.	Delete the fault memory. If the error remains, call the Help Desk and follow their instructions to replace the control unit if necessary.	
9.3	Blinking	Communication trouble with the immobilizer; short-circuiting or circuit open on the CAN line.	The engine cuts out or fails to start.	Perform Immobilizer diagnosis and check the integrity of the CAN line.	
9.4	On	a) Main relay broken. b) Main relay short-circuited.	a) The control unit is not powered (the engine fails to start or cuts out). b) The control unit is constantly powered and the indicator light stays on even with the key turned OFF (the battery discharges).	Replace the main relay.	

BLINK CODE	EDC LAMP	POSSIBLE CAUSE	POSSIBLE TROUBLE	TESTS OR RECOMMENDED ACTION	NOTES
9.5	Off	After Run broken off several times.	Fault memory and other working data are not corrected saved in EEPROM. EDC inhibits starting the engine after a certain number of unsuccessful After Runs.	Check the control unit power supply wiring for any intermittent false contacts. If the wiring is good, replace the main relay.	Investigate any incorrect use of the vehicle.
9.6	Blinking	Failure of the internal test procedure that takes place in the control unit every time the engine stops.	The engine fails to stop in the set time when the +15 key is turned onto OFF.	This could occur if the engine is turned off but it continues to be driven (vehicle moving with gear engaged). Check the wiring between the key +15 and the control unit connector pin B20. Delete the fault memory: if in normal conditions of turning off the engine the error signal persists, call the Help Desk to have the control unit replaced if necessary.	
9.7	Blinking	Internal defect of the control unit in the sensor power supply circuit.	Reduction in power (and noise because pre-injection is not implemented). Irregular engine operation due to sensors not being powered correctly.	Call the Help Desk and follow their instructions to replace the control unit if necessary.	Defects may be signalled for various sensors powered by the control unit.

Print 603.43.351

Base - 3rd Ed. - February 2002

BLINK CODE	EDC LAMP	POSSIBLE CAUSE	POSSIBLE TROUBLE	TESTS OR RECOMMENDED ACTION	NOTES
9.8	Blinking	Internal problem with the control unit software or an attempt to tamper with the data-set.	The engine fails to start or starts only occasionally.	Delete the fault memory: if the error remains, call the Help Desk and follow their instructions to reprogram or replace the control unit if necessary.	
9.9	Blinking	Internal problem with the control unit software (operating system).	Possible short breaks in injection because the control unit resets irregularly while the engine is running. Other defects may be signalled.	Delete the fault memory: if the error remains, call the Help Desk and follow their instructions to replace the control unit if necessary.	If this error is signalled together with other defects, resolve this problem first as it could be the cause of the others.

1st Section
for engine versions with EDC 16 ECU

DTC	FMI	Failing component	Type of Failure	Visible failure	Possible Cause	Repair action	Checks to be performed	Measuring conditions	Values to be detected	Remarks
01	01	VEHICLE - AIR-CONDITIONER COMPRESSOR RELAY	EXCEEDED UPPER LIMIT	A/C compressor always on.	Short-circuit to positive.	Check wiring and connections. Replace relay if required.				
01	02	VEHICLE - AIR-CONDITIONER COMPRESSOR RELAY	BELOW LOWER LIMIT	Check correct operation of warning light using "Active diagnostic" procedure.	Short-circuit to ground.	Check wiring and connections. Replace relay if required.				
01	04	VEHICLE - AIR-CONDITIONER COMPRESSOR RELAY	NO SIGNAL	A/C compressor not working.	Open circuit, relay disconnected.	Check wiring and connections. Replace relay if required.				
01	08	VEHICLE - AIR-CONDITIONER COMPRESSOR RELAY	SIGNAL NOT PLAUSIBLE	A/C compressor not working.	Open circuit, relay disconnected.	Check wiring and connections. Replace relay if required.				
02	04	VEHICLE - AIR-CONDITIONER COMPRESSOR RELAY	NO SIGNAL	A/C compressor not working.	No CAN line signal.	Check wiring and connections. Replace relay if required.				
02	08	VEHICLE - AIR-CONDITIONER COMPRESSOR RELAY	SIGNAL NOT PLAUSIBLE	A/C compressor not working.	Non plausible CAN line signal.	Check wiring and connections. Replace relay if required.				
03	01	ELECTRONIC CONTROL UNIT - INTERNAL ECU FAULT (DTC 3)	EXCEEDED UPPER LIMIT		Wrong ECU programming. Probable electromagnetic interference. Faulty ECU.	Switch key on/off and wait for a few seconds, clear failure memory. If the error persists, call the Help Desk for instructions on how to replace the ECU.				

DTC	FMI	Failing component	Type of Failure	Visible failure	Possible Cause	Repair action	Checks to be performed	Measuring conditions	Values to be detected	Remarks
03	02	ELECTRONIC CONTROL UNIT - INTERNAL ECU FAULT (DTC 3)	BELOW LOWER LIMIT		Wrong ECU programming. Probable electromagnetic interference. Faulty ECU.	Switch key on/off and wait for a few seconds, clear failure memory. If the error persists, call the Help Desk for instructions on how to replace the ECU.				
03	04	ELECTRONIC CONTROL UNIT - INTERNAL ECU FAULT (DTC 3)	NO SIGNAL		Wrong ECU programming. Probable electromagnetic interference. Faulty ECU.	Switch key on/off and wait for a few seconds, clear failure memory. If the error persists, call the Help Desk for instructions on how to replace the ECU.				
03	08	ELECTRONIC CONTROL UNIT - INTERNAL ECU FAULT (DTC 3)	SIGNAL NOT PLAUSIBLE		Wrong ECU programming. Probable electromagnetic interference. Faulty ECU.	Switch key on/off and wait for a few seconds, clear failure memory. If the error persists, call the Help Desk for instructions on how to replace the ECU.				
05	01	EGR - INCORRECT DEBIMETER SIGNAL	EXCEEDED UPPER LIMIT	Possible poor performance in acceleration.	Flow meter short-circuit or open circuit.	Check integrity of flow meter and wiring between flow meter connector and EDC connector.				Power reduction and deactivated EGR function.
05	02	EGR - INCORRECT DEBIMETER SIGNAL	BELOW LOWER LIMIT	Possible poor performance in acceleration.	Flow meter short-circuit or open circuit.	Check integrity of flow meter and wiring between flow meter connector and EDC connector.				Power reduction and deactivated EGR function.

DTC	FMI	Failing component	Type of Failure	Visible failure	Possible Cause	Repair action	Checks to be performed	Measuring conditions	Values to be detected	Remarks
07	01	EGR - DEBIMETER SIGNAL OUT OF LIMIT	EXCEEDED UPPER LIMIT	Possible poor performance in acceleration.	Flow meter short-circuit or open circuit.	Check integrity of flow meter and wiring between flow meter connector and EDC connector.				Power reduction and deactivated EGR function.
07	02	EGR - DEBIMETER SIGNAL OUT OF LIMIT	BELOW LOWER LIMIT	Possible poor performance in acceleration.	Flow meter short-circuit or open circuit.	Check integrity of flow meter and wiring between flow meter connector and EDC connector.				Power reduction and deactivated EGR function.
07	02	EGR - DEBIMETER SIGNAL OUT OF LIMIT	BELOW LOWER LIMIT	Possible poor performance in acceleration.	Flow meter short-circuit or open circuit.	Check integrity of flow meter and wiring between flow meter connector and EDC connector.				Power reduction and deactivated EGR function.
08	01	VEHICLE - ACCELERATOR PEDAL 1	EXCEEDED UPPER LIMIT	Incorrect accelerator pedal operation, engine idling at 1500 rpm.	Short-circuit to positive, voltage exceeding 4700 mV.	In "Measurable parameters" environment, check that the "accelerator pedal position" parameter changes proportionally to the position of the pedal from 0% to 100%. Check wiring and connections. Replace accelerator pedal if required.				Make sure that accelerator pedal travel is not hindered.

SECTION 3

5052 Clutch

Page

DESCRIPTION 3

DIAGNOSTICS 4

CHARACTERISTICS AND DATA 7

TIGHTENING TORQUES 13

TOOLS 13

CLUTCH REMOVAL AND REFITTING 14

❑ Removal 14

CHECKS 14

❑ Refitting 15

THRUST BEARING REMOVAL AND REFITTING 15

CLUTCH DRIVE 16

❑ Hydraulic clutch drive 17

HYDRAULIC CLUTCH DRIVE REMOVAL - REFITTING 18

❑ Removal 18

❑ Refitting 18

PEDAL BOARD REMOVAL - REFITTING 20

❑ Removal 20

❑ Refitting 20

PEDAL BOARD 21

DESCRIPTION

The clutch unit consists of the following:

- a driven disk - lined on both sides with friction seals and fitted with a hub at the centre. Additionally, a hub spring is provided to make it more elastic and soft;
- a thrust pad - fixed to the cover or body of the friction clutch mechanism by means of plates that allow for axial movement when the diaphragm spring is driven by the collar bearing;
- a diaphragm spring made from a certain number of blades arranged in a dial form;
- a collar bearing mounted on the diaphragm spring and locked to the same by means of the split ring. With this solution it is no longer necessary to adjust the clearance between the collar bearing and diaphragm spring since both the components are in contact. Moreover, the clutch is released by traction of the collar bearing.

The introduction of a diaphragm spring (or Belville washer) as an elastic driving brings about important advantages, such as:

- smaller axial size and reduced sensibility of the centrifugal force, due to the absence of the release lever;
- greater constructive accuracy due to the reduced number of components;
- improved cooling capacity due to the reduced contact surfaces between diaphragm and disk driver;
- less unbalance;
- easy maintenance thanks to:

1. no regulation required for clearance;
2. no further need to level-off the thrust pad.

Finally, it must be noted how the non-linear characteristics of the diaphragm spring offer a reduced variation of the release force as the control pedal gradually completes its travel and, with a load on the disk driver not less than the rated value even with worn seals.

Figure 1

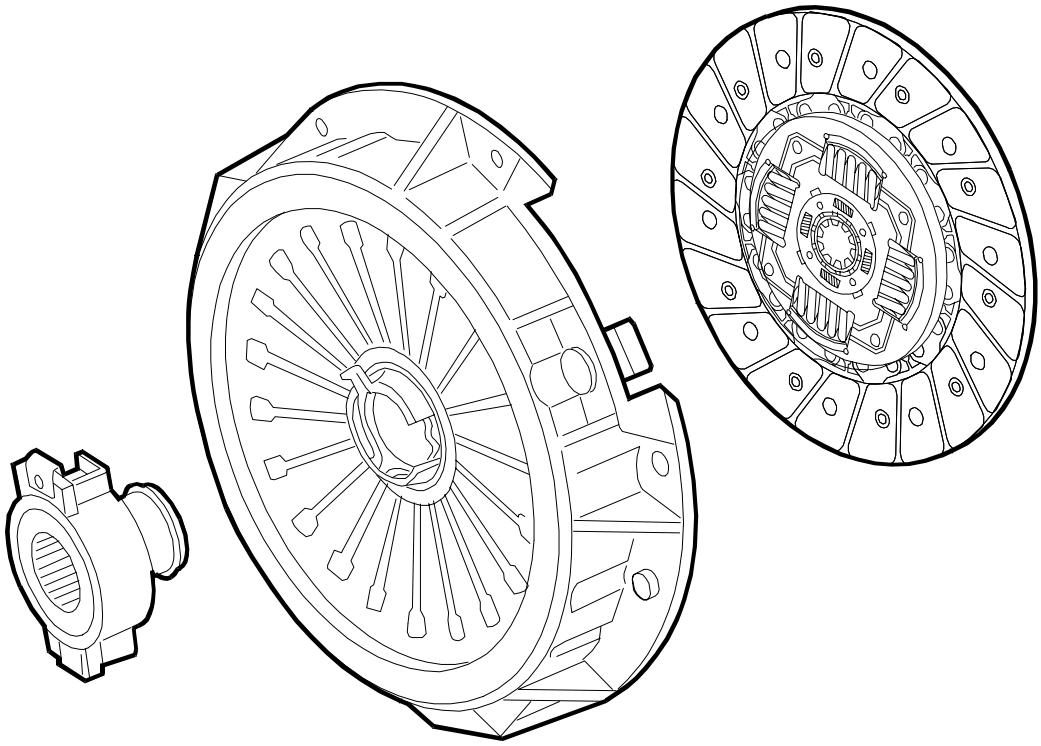

52233

VIEW OF CLUTCH ASSEMBLY

DIAGNOSTICS

Main operating faults of the clutch are:

1 - Noise when the clutch pedal is pressed;
2 - Noise when the pedal is released;
3 - Clutch jerks;
4 - The clutch does not release;
5 - The clutch slips;
6 - Abnormal wear of driven disk seals.

1 NOISE WHEN CLUTCH PEDAL IS PRESSED

Collar bearing excessively worn, damaged or not properly lubricated. – YES → Replace the collar bearing.

NO

Excessive play between the clutch engagement grooves on the shaft and the relevant seat on the hub of the driven disk. – YES → Replace the shaft and, if necessary, the driven disk also.

2 NOISE WHEN THE PEDAL IS RELEASED

Driven disk springs are broken or weakened. – YES → Replace the driven disk.

NO

Clutch engagement shaft worn. – YES → Replace the shaft and, if necessary, the driven disk also.

NO

Collar bearing has excessive play in the joint. – YES → Replace the collar bearing.

3 CLUTCH JERKS

Oil or grease on the engine flywheel, or on the seals of the driven disk.
– YES → Replace the oil or grease, clean the flywheel, and replace the driven disk.

NO

Thrust pad deformed.
– YES → Replace the clutch.

NO

Friction seals worn due to off centring of the driven disk.
– YES → Replace the driven disk.

NO

Clutch diaphragm spring weak or broken.
– YES → Replace the driven disk.

NO

Driven disk springs broken or yielded.
– YES → Replace the driven disk.

4 THE CLUTCH DOES NOT RELEASE

Oil or grease on the seals of the driven disk.
– YES → Remove the oil or grease; clean the flywheel and replace the driven disk.

NO

Grooves on the clutch engagement shaft are worn and impede the movement of the driven disk.
– YES → Replace the shaft and, if necessary, the driven disk.

Clutch pedal height not adjusted (only mechanical control). – YES → Adjust the height of the clutch pedal.

NO

Clutch release hydraulic control not efficient. – YES → Replace the hydraulic control.

5 THE CLUTCH SLIPS

Driven disk seals worn or burnt. – YES → Replace the driven disk.

NO

Clutch diaphragm springs weak or broken. – YES → Replace the clutch.

NO

Oil or grease on the seals of the driven disk. – YES → Remove the oil or grease, and replace the driven disk.

6 ABNORMAL WEAR OF DRIVEN DISK SEALS

The driver keeps the clutch pedal pressed while driving. – YES → The driver must stop this habit and use the clutch pedal only when necessary.

NO

Clutch diaphragm spring blades weakened or broken. – YES → Replace the clutch.

CHARACTERISTICS AND DATA

Models 29 L .9/.11 - 35 S .9/.11 - 35 C .9 - 35 C .11 - 40 C .9 - 40 C .11* - 45.C.11* - 50.C.11*

9 " 1/4 CLUTCH			VALEO
	Type		Dry single disk
			
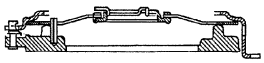	Clutch mechanism		"Pull" with diaphragm spring
	Driven disk		With friction seals
			
	Driven disk hub		With double hub springs
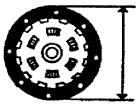	External Ø seal	mm	235 $^{0}_{-1}$
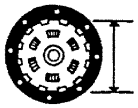	Internal Ø seal	mm	165 $^{0}_{-1}$
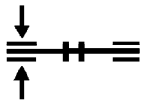	Disk thickness (new)	mm	7.7 ± 0.3
	Under load	N	6000
Minimum thickness due to wear		mm	1.25
	Max. off centring driven disk	mm	~ 0.3
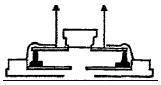	Minimum load on thrust plate	N	6800
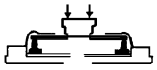	Max. release load at 9 mm. release height	N	1500
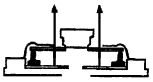	Minimum rise thrust pad at 9 mm. release height	mm	1.4
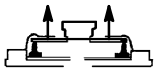	Disengagement stroke	mm	9 + 1
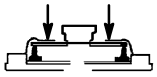	Max. depression stroke	mm	12
	Disengagement control		hydraulic
	Lubricant		-

Values refer to new clutch

* Only vehicles with 5 speed gearbox 5 S 200

Models 29 L 10 - 29 L 12 - 35 S 10 - 35 S 12 - 35 C 10 - 35 C 12

9 " 1/4 CLUTCH			BORG & BECK
	Type		Dry single disk
	IVECO PARTS		
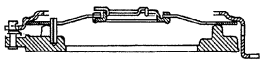	Clutch mechanism		"Pull" with diaphragm spring
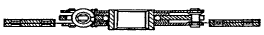	Driven disk		With friction seals
	IVECO PARTS		
	Driven disk hub		
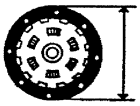	External Ø seal	mm	235 $^{0}_{-1}$
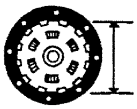	Internal Ø seal	mm	165 $^{+1.5}$
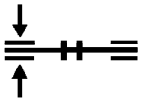	Disk thickness (new)	mm	7.7 ± 0.3
	Under load	N	6850
Minimum thickness due to wear		mm	1.25
	Max. off centring driven disk	mm	~ 0.2
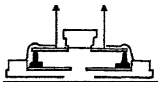	Minimum load on thrust plate	N	6850
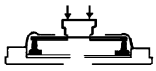	Max. release load at 9 mm. release height	N	1400
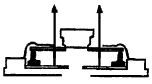	Minimum rise thrust pad at 9 mm. release height	mm	1.6
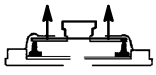	Disengagement stroke	mm	9 + 1
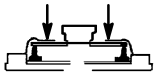	Max. depression stroke	mm	9.5
	Disengagement control		hydraulic
	Lubricant		-

Values refer to new clutch

Models 35 S .13 - 35 C .13 - 40 C.11* - 40 C .13 - 45 C. 11* - 45 C .13 - 50 C.11* - 50 C .13

10" 1/2 CLUTCH			BORG & BECK
	Type		Dry single disk
			
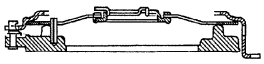	Clutch mechanism		"Pull" with diaphragm spring
	Driven disk		With friction seals
			
	Driven disk hub		With double hub springs
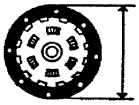	External Ø seal	mm	267
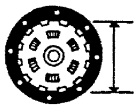	Internal Ø seal	mm	171.5
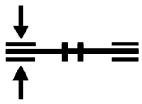	Disk thickness (new)	mm	8.5 ± 0.3
	Under load	N	6800
Minimum thickness due to wear		mm	1.5
	Max. off centring driven disk	mm	~ 0.2
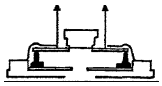	Minimum load on thrust plate	N	6800
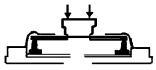	Max. release load at 9 mm. release height	N	1950
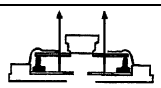	Minimum rise thrust pad at 9 mm. release height	mm	1.6
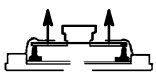	Disengagement stroke	mm	9 + 1
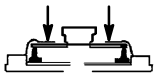	Max. depression stroke	mm	11.2
	Disengagement control		hydraulic
	Lubricant		-

Values refer to new clutch

* Only vehicles with 6 speed gearbox 6 S 300

Models 35 S .13 - 35 C .13 - 40 C.11* - 40 C .13 - 45 C. 11* - 45 C .13 - 50 C.11* - 50 C .13

10" 1/2 CLUTCH			VALEO
	Type		Dry single disk
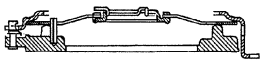	Clutch mechanism		"Pull" with diaphragm spring
	Driven disk		With friction seals
	Driven disk hub		With double hub springs
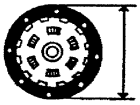	External Ø seal	mm	267
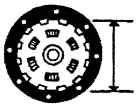	Internal Ø seal	mm	171.5
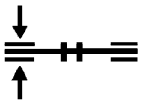	Disk thickness (new)	mm	8.5 ± 0.3
	Under load	N	6800
Minimum thickness due to wear		mm	1.5
	Max. off centring driven disk	mm	~ 0.2
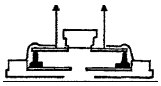	Minimum load on thrust plate	N	6800
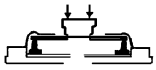	Max. release load at 9 mm. release height	N	1900
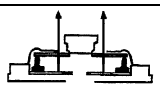	Minimum rise thrust pad at 9 mm. release height	mm	1.5
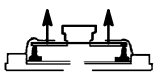	Disengagement stroke	mm	9 + 1
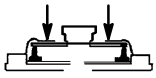	Max. depression stroke	mm	12.6
	Disengagement control		hydraulic
	Lubricant		-

Values refer to new clutch

* Only vehicles with 6 speed gearbox 6 S 300

Models 60 C 15 - 65 C 15

11 " CLUTCH			VALEO
	Type		Dry single disk
	IVECO PARTS		
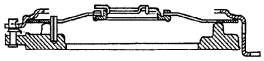	Clutch mechanism		"Pull" with diaphragm spring
	Driven disk		With friction seals
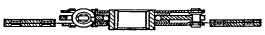	IVECO PARTS		
	Driven disk hub		With double hub springs
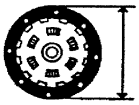	External Ø seal	mm	280
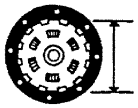	Internal Ø seal	mm	$171\ ^{+1}_{-0,5}$
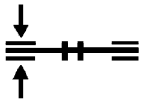	Disk thickness (new)	mm	8.5 ± 0.3
	Under load	N	8000
Minimum thickness due to wear		mm	1.5
	Max. off centring driven disk	mm	~ 0.2
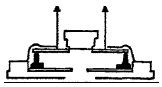	Minimum load on thrust plate	N	6800
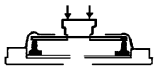	Max. release load at 9 mm. release height	N	1850
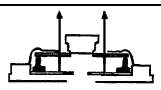	Minimum rise thrust pad at 9 mm. release height	mm	1.5
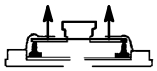	Disengagement stroke	mm	$9\ -\ ^{1}$
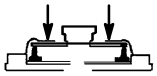	Max. depression stroke	mm	13.6
	Disengagement control		hydraulic
	Lubricant		-

Values refer to new clutch

Models 60 C 15 - 65 C 15

11 " CLUTCH			BORG & BECK
	Type		Dry single disk
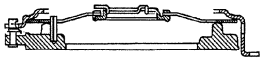	Clutch mechanism		"Pull" with diaphragm spring
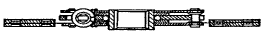	Driven disk		With friction seals
	Driven disk hub		With double hub springs
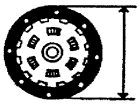	External Ø seal	mm	280
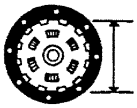	Internal Ø seal	mm	$171^{+1}_{-0,5}$
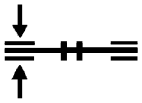	Disk thickness (new)	mm	8.5 ± 0.3
	Under load	N	8000
Minimum thickness due to wear		mm	1.5
	Max. off centring driven disk	mm	~ 0.2
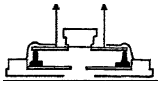	Minimum load on thrust plate	N	6800
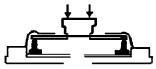	Max. release load at 9 mm. release height	N	1850
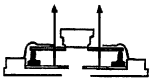	Minimum rise thrust pad at 9 mm. release height	mm	1.5
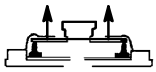	Disengagement stroke	mm	9 - 1
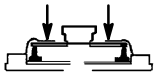	Max. depression stroke	mm	13.6
	Disengagement control		hydraulic
	Lubricant		-



Values refer to new clutch

TIGHTENING TORQUES

PART		TORQUE Nm	TORQUE kgm
Screw securing clutch to engine flywheel		46.5	4.7
Nut securing clutch control flexible mounting to gearbox *			
Nut securing lever drive adjusting pin		17.6 ± 2	1.7 ± 0.2
Nut for screw securing clutch control cable to adjustment pin	DAC 5	5.5 ± 0.5	0.5
	not lining	9 ± 1	0.9 ± 0.1
Screw securing operator cylinder mounting to gearbox		-	-
Screw secuing pedal board mounting		-	-

* Mechanical control

TOOLS

TOOL NO.	DESCRIPTION
99370205 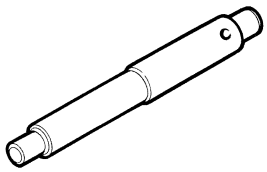	Guide pin for centring clutch driven disk

Figure 2

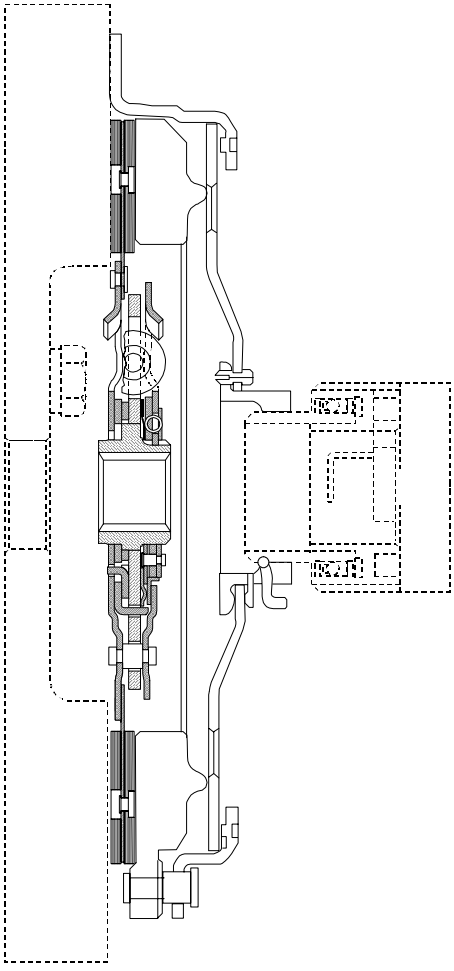

52230

505210 CLUTCH REMOVAL AND REFITTING

Removal

The operation consists of:

- ❑ removal-refitting of transmission shafts (see section 505620);
- ❑ removal-refitting of gear box (see section 530210).

Figure 3

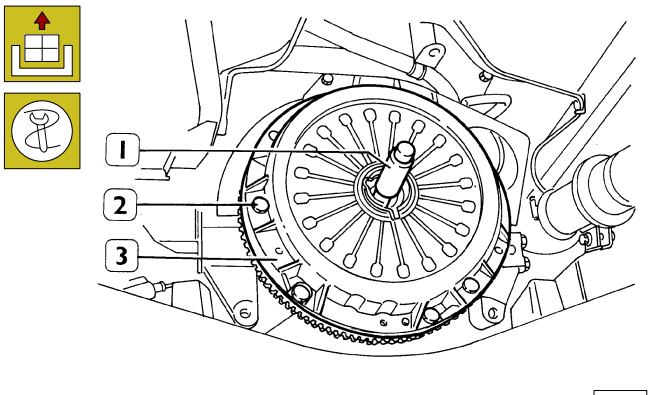

Insert the centering pin 99370205 (1) in the gear infeed shaft support bearing, to facilitate clutch removal operations.

Remove the fixing screws (2) and remove the thrust pad (3) from the engine flywheel.

Figure 4

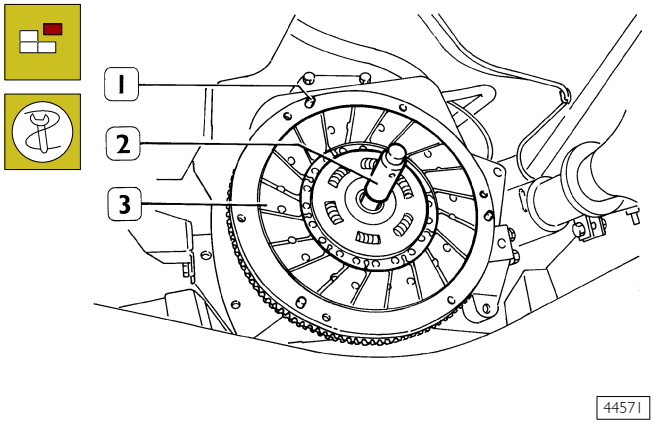

Remove the clutch disk (3) by extracting the centring pin 99370205 (2).

Disk plate centering pin (1) located on the engine flywheel.

CHECKS

The checks to be made are as follows:

- ❑ the mating surface, on the engine flywheel, of the driven disk must not be excessively worn or scored.
- ❑ the teeth of the toothed crown must not be worn or broken.

If this is not the case, disassemble the engine flywheel (operation 540850) as described in the relevant paragraph at section 2.

Proceed on the engine flywheel as described in relevant paragraph (operation 540853) at section 2.

Check that there are no oil leaks, even of a slight entity, from the seal of the rear drive shaft; otherwise remove the flywheel as described in the relevant paragraph. Remove the rear cover complete with sealing rings and replace the same as described at section 2.

Check that the support bearing or bushing of the take up shaft on the gears fitted to the drive shaft are not worn or broken and, if necessary, replace them as described in the relevant paragraph (540852).

Check the condition of the thrust pad; the driven disk support surface must not be scored or excessively worn or should there be signs of overheating; the diaphragm spring must be in perfect condition.

Check the condition of the driven disk:

- ❑ the friction seals must not be excessively worn or present signs of overheating, or traces of oil or grease;
- ❑ there should be very little backlash between the hub and gear take up shaft;
- ❑ the hub rings must not be loose or broken.

When any defects are found, replace the part in question.

The complete clutch is supplied with a spare kit.

The following are supplied singularly:

- ❑ the driven disk and collar bearing.

In this case it will necessary to assemble the new parts of the driven disk spring that is to be reused.

Figure 5

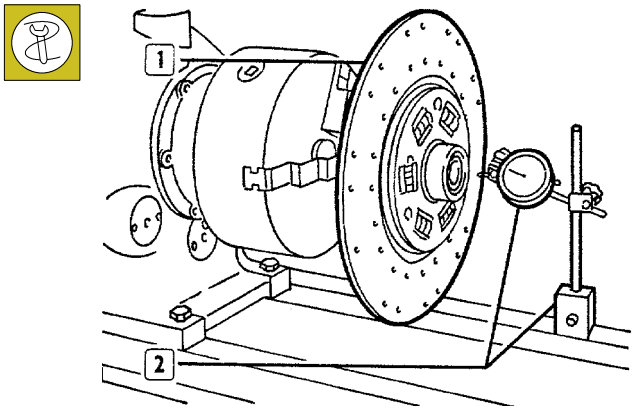

Before fitting a new driven disk check that it is centred as follows:

Position the driven disk (1) on a lathe and, with the use of a magnetic base dial gauge (2), check that the surface of the disk is not out of line at any point.

Maximum tolerance allowed for the driven disk is 0.20 mm.

Figure 6

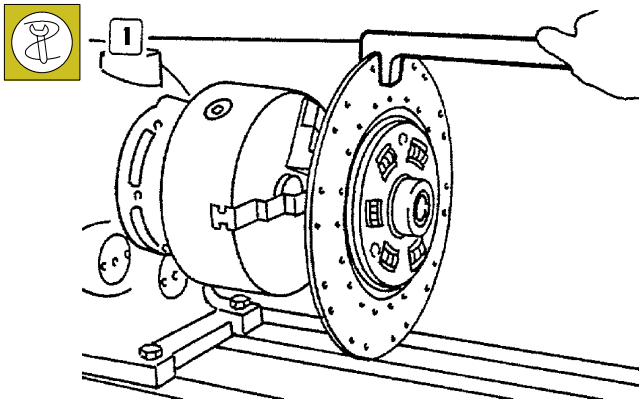

If the disk is out of line use a hook wrench (1) as in the figure.

Refitting

Follow the same procedures as for removal in reverse order and:

- ❑ carefully clean the faying surface of the flywheel disk using methylated spirits or petrol; if any slight scratches are noted remove with an abrasive cloth;
- ❑ position the driven disk (3, Figure 4), using the guide pin (2, Figure 4) to obtain perfect centring and to avoid straining the hub when the gears are reconnected;
- ❑ position the thrust pad by aligning the holes with the centring grub screws (1, Figure 4) on the engine flywheel;
- ❑ assemble and lock the thrust pad fixing screws to the correct torque;
- ❑ remove the guide pin;
- ❑ reconnect the gears after spreading the grooved shaft with molybdenum disulphide Molikote as described in Section 4;
- ❑ adjust the clutch travel as described in the relevant paragraph (operation).

505254 THRUST BEARING REMOVAL AND REFITTING

Figure 7

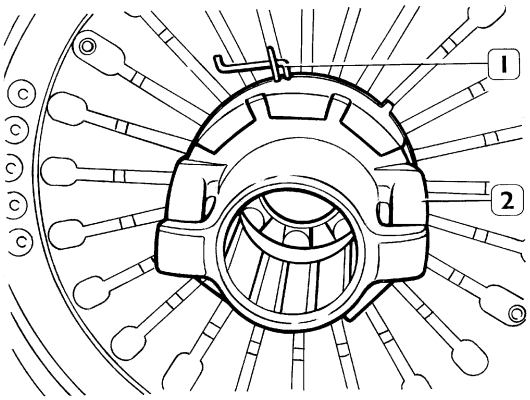

The operation consists of:

- ❑ removal-refitting of transmission shafts (see section 505620);
- ❑ removal-refitting of gear box (see section 530210).

By using the appropriate pliers open the split pin (1) and extract the collar bearing (2) from the thrust pad.

To assemble, carry out the disassembly operations in reverse.

The new part must be of the same supply as the driven disk that is to be reused.

505260 CLUTCH DRIVE

Figure 8

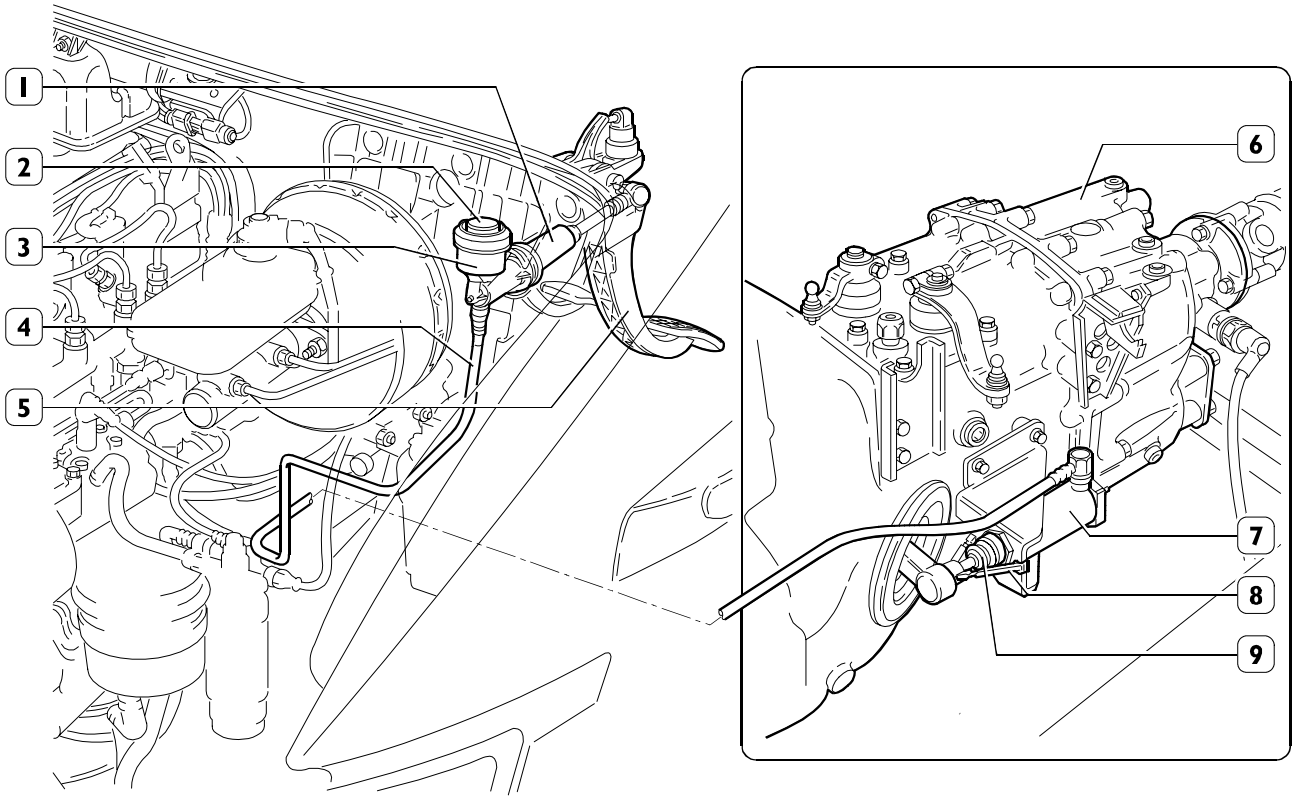

The hydraulic clutch drive is composed of:

- a master cylinder (1) mounted on the pedal board and connected to the clutch pedal (5), with an integrated oil tank (3).
- an operating cylinder (7) fixed to the gearbox (6).
- an oil pipe (4).

The components of the hydraulic drive must never be dismantled or separated from each other in any way. The cover (2) of the oil tank (3) must not be removed.

This assembly requires no maintenance and the hydraulic circuit must not be vented.
In the event of defectiveness, the entire assembly needs to be replaced as it is supplied as a spare part, proceeding as described under the relevant heading.
The clip (8) holding the push rod (9) on the assembly supplied as a spare part must not be removed or cut.

Hydraulic clutch drive

Figure 9

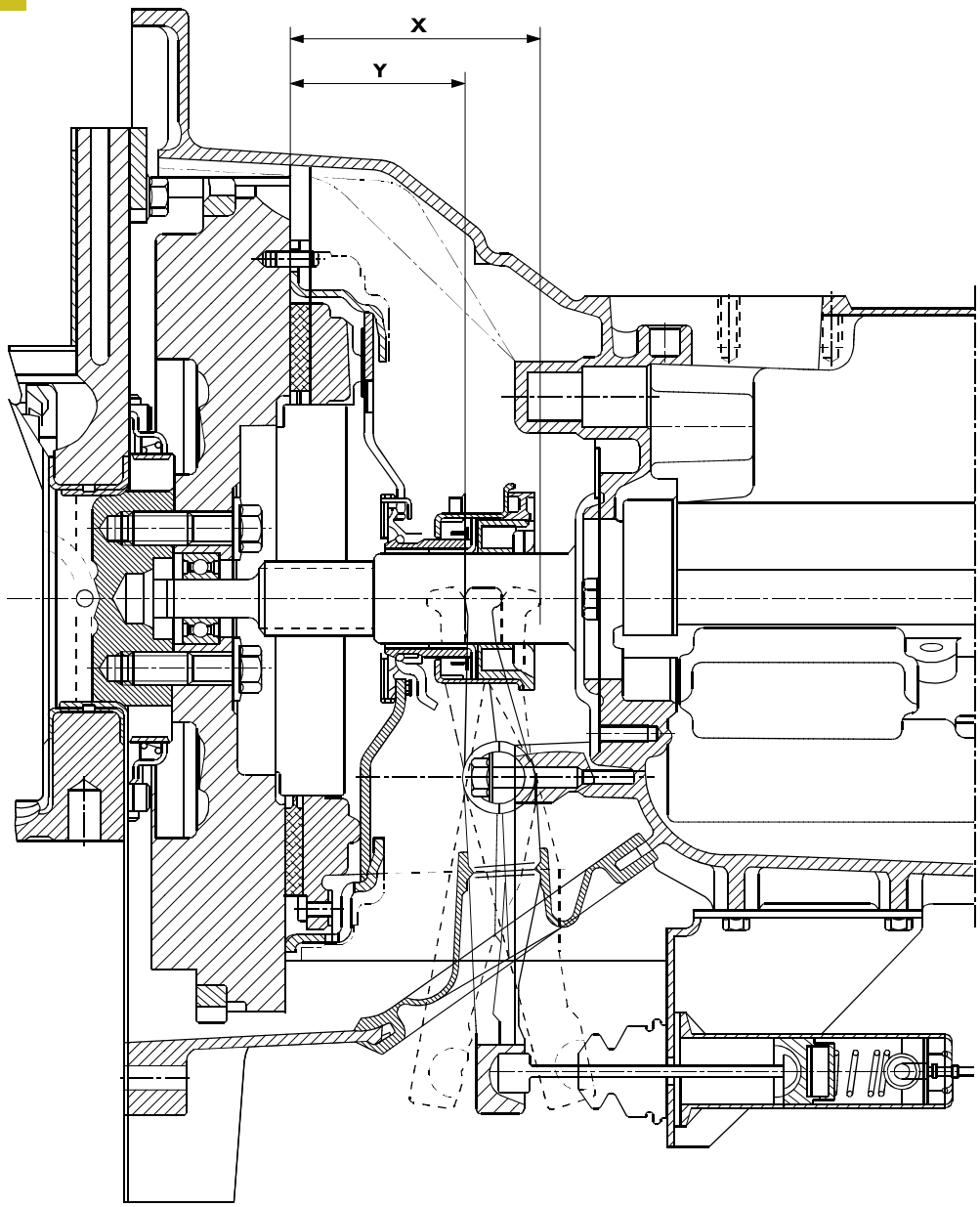

62090

SPECIFICATIONS AND DATA

Main cylinder diameter	18 mm
Main cylinder section	254.47 mm^2
Operating cylinder diameter	22 mm
Operating cylinder section	346.36 mm^2
Clutch pedal ratio	5.85
Hydraulic ratio	1.36
Clutch disengagement lever ratio	1.67
Overall reduction ratio	13.28
Max disengagement stroke X	▲ (94) ● (99) ■ (98,7) mm
Max wear stroke Y	▲ (65) ● (70,8) ■ (65) mm

▲ 9 " 1/4 CLUTCH
● 10 " 1/2 CLUTCH
■ 11" CLUTCH

HYDRAULIC CLUTCH DRIVE REMOVAL - REFITTING

Figure 10

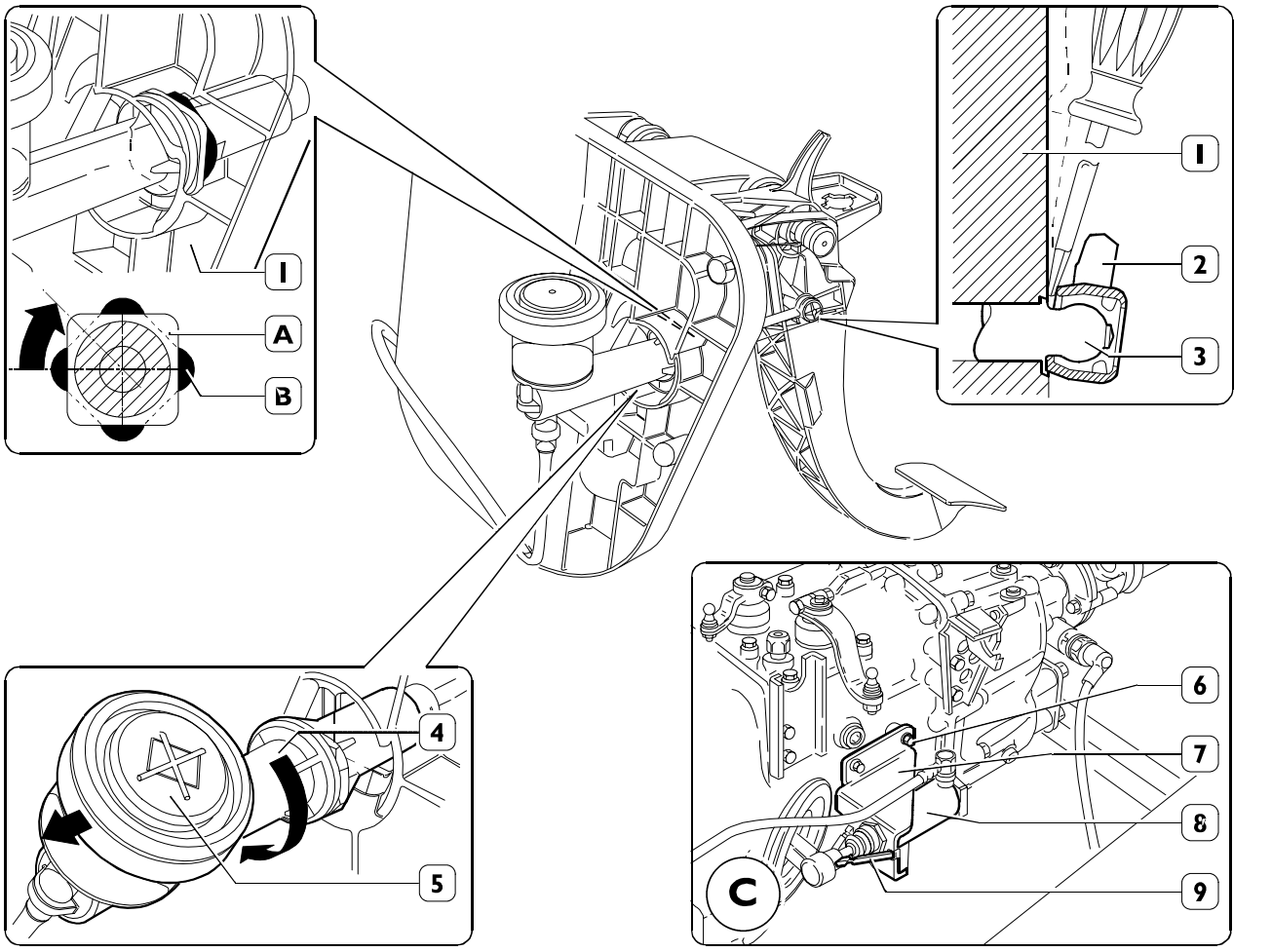

Removal

Position the vehicle over the pit or on the lift.
From inside the cab, using a screwdriver, unhook the swivel head (2) of the master cylinder push rod from the clutch pedal link pin (3).

Do not act on the pin (3) to prevent it coming out of the pedal board (1).

Working from the engine bay, turn the master cylinder (4) to the right (approx. 1/8 of a turn) to align the square of the hole (A) in the pedal board (1) with the square (B) of the master cylinder body and extract it from the pedal board (1).

Working under the vehicle, disengage the operating cylinder (8 detail C) by unscrewing the screws (6 detail C) securing the cylinder mounting (7 detail C) from the gearbox.

Remove the hydraulic clutch drive assembly from the vehicle.

Refitting

For refitting, carry out the operations for removal in reverse order, taking the following precautions:

- ❑ Do not press the clutch pedal until refitting is complete.
- ❑ During assembly, handle parts carefully.
- ❑ Lubricate the contact surfaces of the clutch disengagement lever with the clutch pedal link pin.
- ❑ Lubricate the contact surface of the master cylinder swivel head with the clutch pedal link pin.
- ❑ After refitting the operating cylinder mounting to the gearbox, check that the cylinder push rod is aligned with the clutch disengagement lever seat.
- ❑ If replacing with a new hydraulic drive assembly, after refitting, press firmly on the clutch pedal so as to break or free the clamp holding the push rod (9).
- ❑ Lift the clutch pedal by hand with a force of no greater than 5 daN to its limit and hold it in this position for at least five seconds so that the oil from the tank will supply the master cylinder. Repeat this operation if necessary.

Figure 11

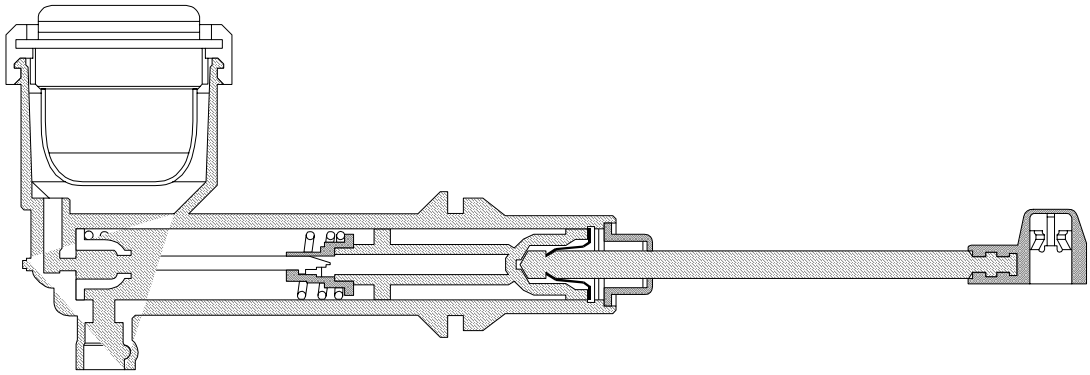

52235

MASTER CYLINDER

Figure 12

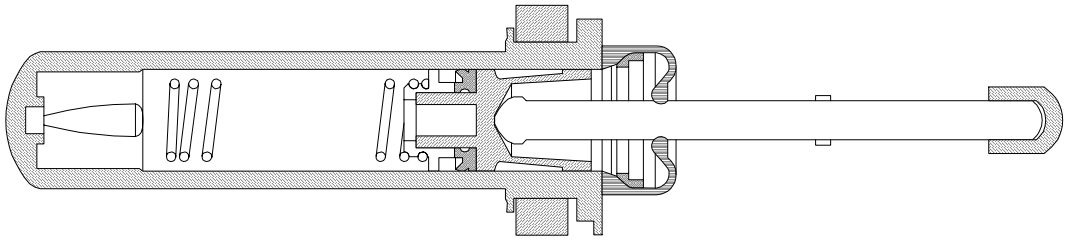

52236

OPERATING CYLINDER

Figure 13

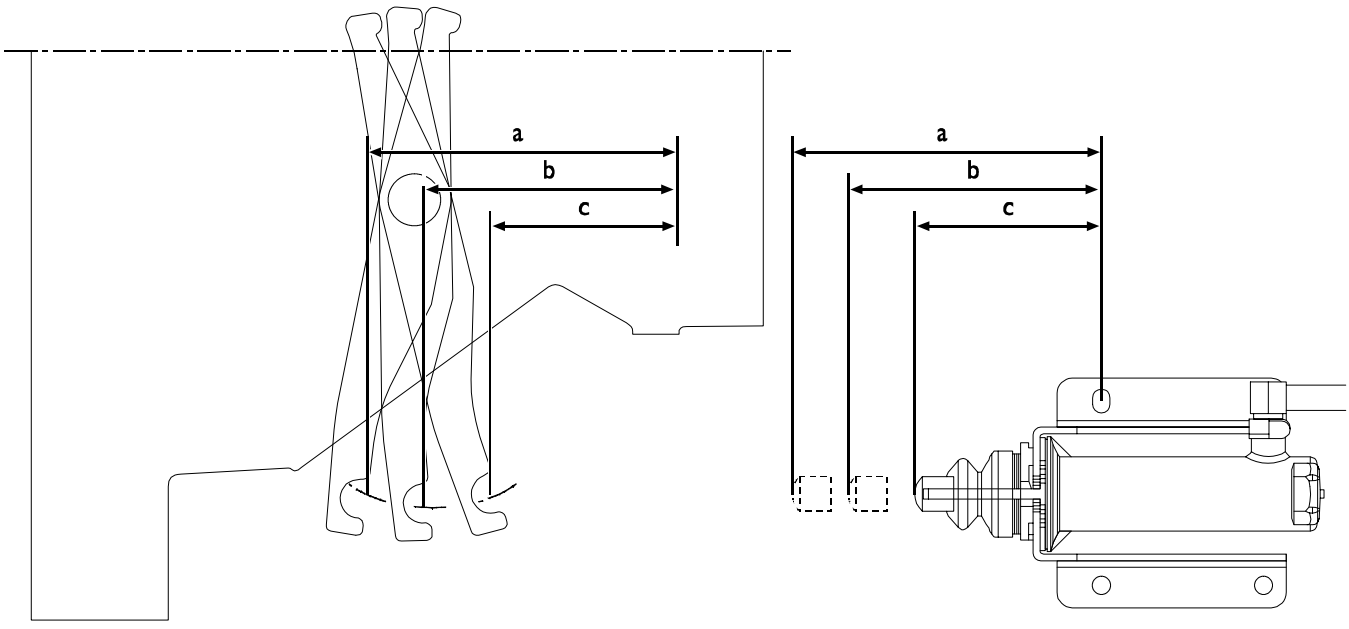

52237

The operating cylinder makes up for the wear of the driven disc marking an increase in load on the pedal during disengagement when the wear on the driven disc gets to be 90%.

Maximum disengagement position when new (a)	121.8 mm.
Engagement position when new (b)	99.29 mm.
Minimum position with worn disc (c)	73.3 mm.

502601 PEDAL BOARD REMOVAL - REFITTING

Removal

Figure 14

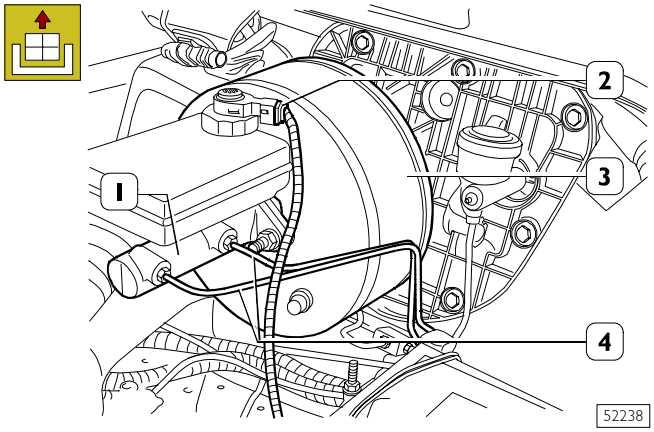

Set a proper container under the brake pipes (4) and remove them from the brake pump (1) of the vacuum brake (3).

When draining the brake oil, take care it does not come into contact with anyone, clothes, or painted parts.

Disconnect the electrical connection (2) from the brake liquid tank plug.

Figure 15

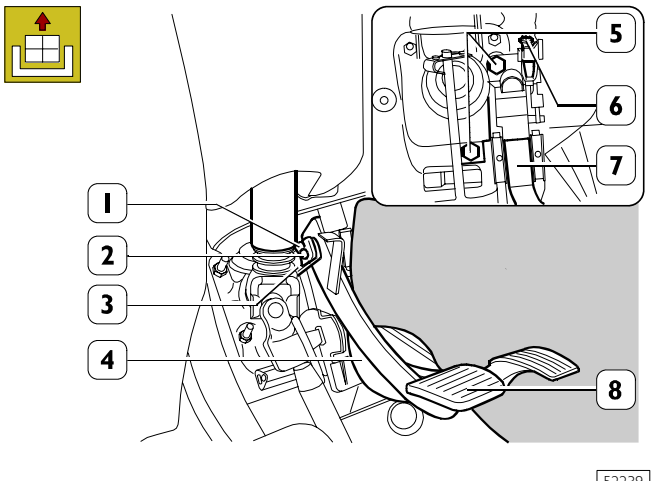

From inside the cab:

For vehicles with electronic injection only

Remove the side guard (7), disconnect the electrical connection (6) from the accelerator pedal (4). Take out the screws (5) and remove the accelerator pedal (4) from the pedal board.

For vehicles with mechanical injection pump and mechanical clutch drive only

Disconnect the accelerator cable and the clutch disengagement cable from their respective pedals.

Remove the fastener (1) and disconnect the brake pedal (8) from the servo brake fork (3) by extracting the pin (2).

Figure 16

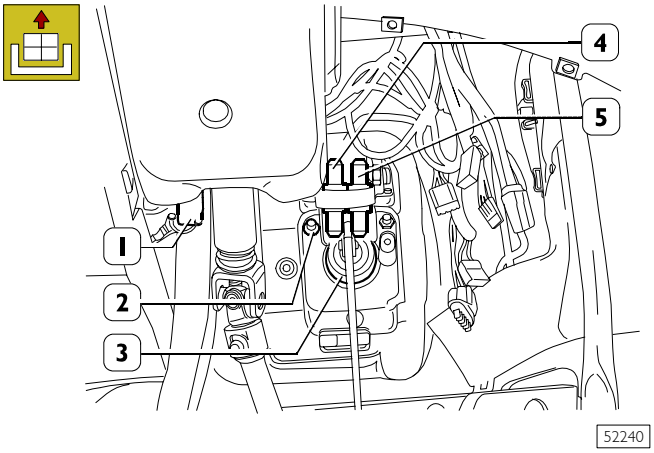

Remove the four nuts (2) fixing the servo brake (3) and take this out of the engine bay.

For vehicles with electronic injection only

Disconnect the electrical connection (1) from the sensor on the clutch pedal and the electrical connection (4) from the sensor on the brake pedal. Disconnect the electrical connection (5) from the switch on the brake pedal.

Figure 17

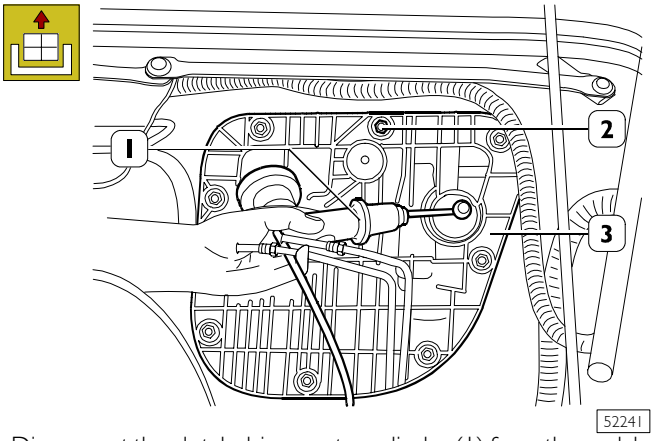

Disconnect the clutch drive master cylinder (1) from the pedal board as described under the relevant heading and set it aside appropriately in the engine bay, taking care not to damage or bend the oil pipe.

Take out the nuts (2) and remove the pedal board (3).

Refitting

For refitting, carry out the operations described for removal in reverse order, taking the following precautions:

- ❑ tighten the nuts/screws to the required tightening torque under the relevant heading;
- ❑ refit the clutch drive cylinder as described under the relevant heading;
- ❑ fill the brake liquid tank with the required quantity and grade and bleed the air (operation 784010) as described under the relevant heading;
- ❑ after making the electrical connections, check the efficiency of the connected components.

PEDAL BOARD

Figure 18

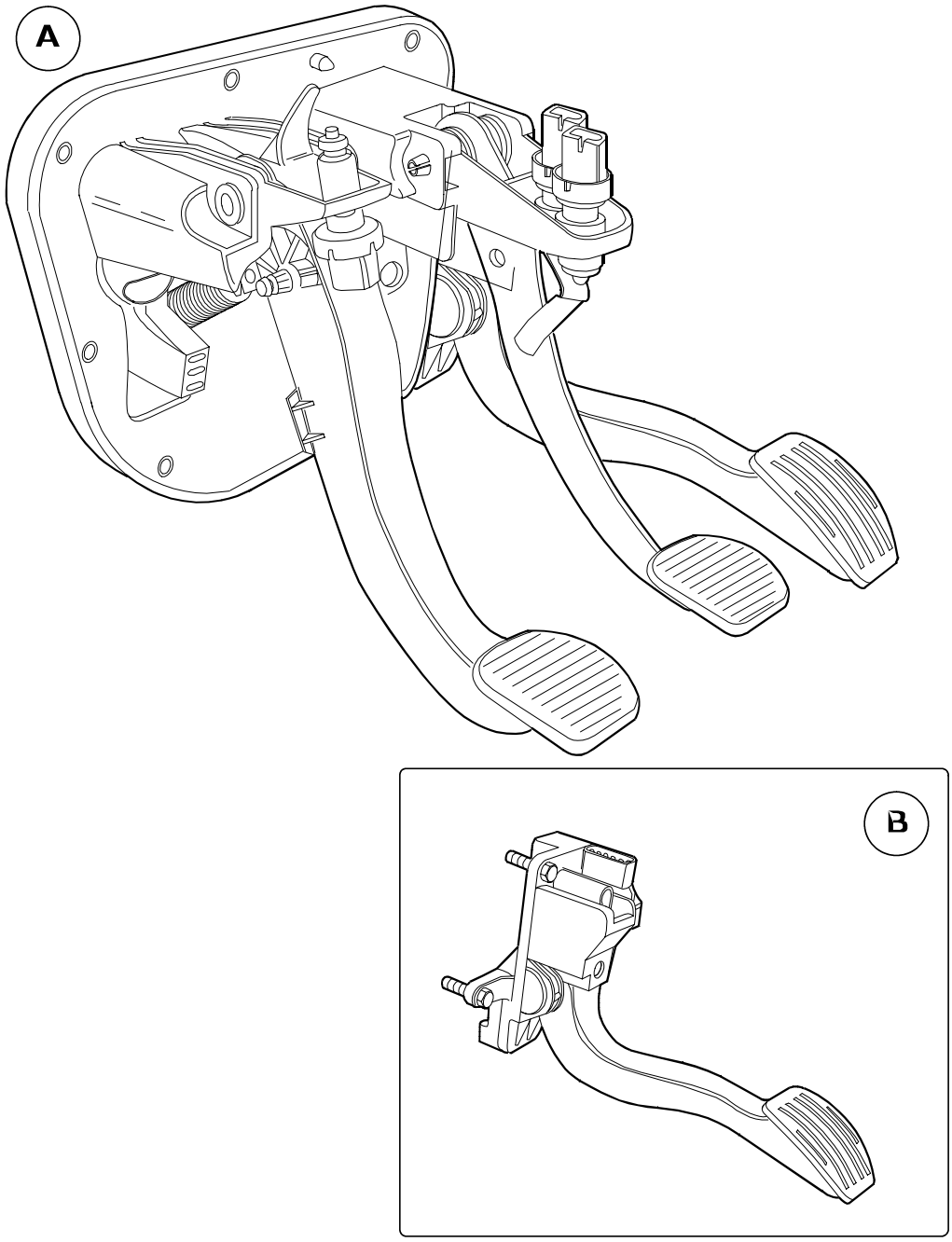

A. Pedal board with mechanical accelerator pedal
B. Electronic accelerator pedal

The only repair operations to be performed on the pedal-assy are the following:

- ❑ Accelerator pedal replacement
- ❑ Sensor replacement

In any other case, replace the pedal using the above-mentioned components if they are serviceable.

SECTION 4

5302 Transmission

	Page
DIAGNOSTICS	3
TRANSMISSION REMOVAL - REFITTING	7
❑ Removal	7
❑ Refitting	7
GEAR CONTROL	8
5 S 200 - 5 S 270 TRANSMISSIONS	9
6 S 300 TRANSMISSION	43
POWER TAKE-OFFS	77

DIAGNOSTICS

Main transmission operation faults:

1 - noisy transmission;

2 - noisy transmission only in reverse speed;

3 - gear spontaneous disengagement;

4 - difficult speed engagement or selection;

5 - leakages of lubricant.

1 NOISY TRANSMISSION

Insufficient lubricating oil level.

– YES → Add **TUTELA TRUCK GEARLITE** oil up to proper level.

NO

Screws which fasten the transmission to the chassis are loose.

– YES → Tighten loose screws properly.

NO

Excessive backlash between gears.

– YES → Overhaul transmission and replace worn gears.

NO

Gears, bearings, synchronizer rings and sliding sleeves worn. Springs broken.

– YES → Replace worn or damaged components.

2 NOISY TRANSMISSION ONLY IN REVERSE SPEED

Reverse speed or connected gears damaged.

– YES → Overhaul transmission.

3 GEAR SPONTANEOUS DISENGAGEMENT

Speed engagement/selection rod release ball spring yielded or broken. – YES → Remove the cap and replace the spring.

NO

Sliding sleeves positioning springs yielded or broken. – YES → Remove the transmission and replace the springs.

4 DIFFICULT SPEED ENGAGEMENT OR SELECTION

Incorrect clutch disengagement. – YES → Check the command or replace clutch.

NO

Wrong quality of oil in the box. Insufficient oil level. – YES → Drain the oil and refill with **TUTELA TRUCK GEARLITE** oil up to proper level.

NO

Movement of sliding sleeves hindered. Forks, sliding sleeves, synchronizer rings worn. – YES → Disassemble the transmission and look for the cause and carry out repairs if necessary.

NO

Wrong assembly of levers on selection and/or gear engagement levers. – YES → Check and/or mount the levers as described under the relevant heading.

5 LEAKAGES OF LUBRICANT

Oil level too high. – YES → Restore proper level.

NO

Breather clogged. – YES → Clean breather.

NO

Input and/or output shaft retaining rings worn. – YES → Replace retaining rings.

NO

Loose screws and/or nuts which fasten: covers, support, boxes. – YES → Remove the component; clean coupling surfaces. Spread on them some LOCTITE 5206 sealing, re-fit and tighten screws and/or nuts to the prescribed torque.

TRANSMISSION REMOVAL - REFITTING

Removal

Here we describe the removal-refitting operations for the 6 S 300 transmission that, unless specified otherwise, also hold for the 5 S 200 transmission.
Position the vehicle over the pit or on a lift or on special stands.
From the engine bay remove the screws fastening the starter motor to the front cover of the transmission.
Remove the starter motor and put it appropriately aside in the engine bay.
From underneath the vehicle:

- ❑ remove the soundproofing guards;
- ❑ disconnect the exhaust pipe (17) from the turbocharger pipe.

Remove the seal from the ring nut (25), unscrew it and disconnect the speedometer control cable.
Disconnect the electrical connection (22) of the reversing light.
Unscrew the screws (23) securing the propeller shaft (24) to the transmission. Secure the propeller shaft to the chassis frame appropriately.
Unscrew the screws (4 and 6) securing the brackets (5 and 7) and disconnect the bowdens (3 and 8) of the gear levers.
For vehicles with hydraulic clutch drive
Unscrew the fixing screws (2), shift the clutch drive cylinder (1) with its bracket and secure it to the chassis frame appropriately.
For vehicles with mechanical clutch drive
Take out the nut (13), flanged nut (12) and the flexible plug beneath. Remove the cable (10) from the clutch disengagement lever (11) and from the bracket (9). Remove the bracket (9).
For all vehicles
Using a hydraulic jack, position bracket 99370629 under the transmission. Lay the chain on the transmission and put one of its links into the slot in the bracket. Screw on the nut so as to firmly secure the transmission to the bracket with the chain. Take out the screws (20) securing the transmission to the crankcase.
Unscrew the fixing screws (19), the fixing screw (21) and the plug and remove the crosspiece (18) supporting the transmission with its plug.
Retract the gearbox to withdraw gear input shaft from clutch plate hub, then lower the hydraulic jack. During lowering the gearbox must not hit or be caught in other components.
At the same time, another operator should move the transmission back to remove its drive input shaft from the clutch disc hub. Then, lower the hydraulic jack while checking that the transmission does not knock against or get caught up with any other parts as it comes down.

Refitting

Refitting the transmission is not particularly difficult. It is sufficient to carry out the operations described for removal in reverse order. Only when coupling the clutch to the transmission is it necessary to take the following precautions.
Using appropriate pliers, open the retaining ring (16) and extract the pressure plate bearing (15) from the diaphragm spring (14) of the clutch. Mount the pressure plate bearing on the sleeve of the drive input shaft cover, connecting it to the clutch disengagement lever. Spread the transmission input shaft with Molikote molybdenum disulphide grease.
Engage a gear to permit rotation of the main shaft by turning the propeller shaft connection flange. Push the transmission fully in so that the pressure plate bearing (15) is correctly engaged in the diaphragm spring.
When connecting the propeller shaft, use new nuts for the screws securing the relative flanges. All nuts and bolts must be tightened to the required torques given in the relevant tables.
Adjust the height of the clutch pedal as described in the relevant paragraph (vehicles with mechanical clutch drive). After refitting the transmission, check that the electrical cables are connected properly. Check that the gears engage correctly. If they do not, proceed as described under the gear control heading.

Figure 1

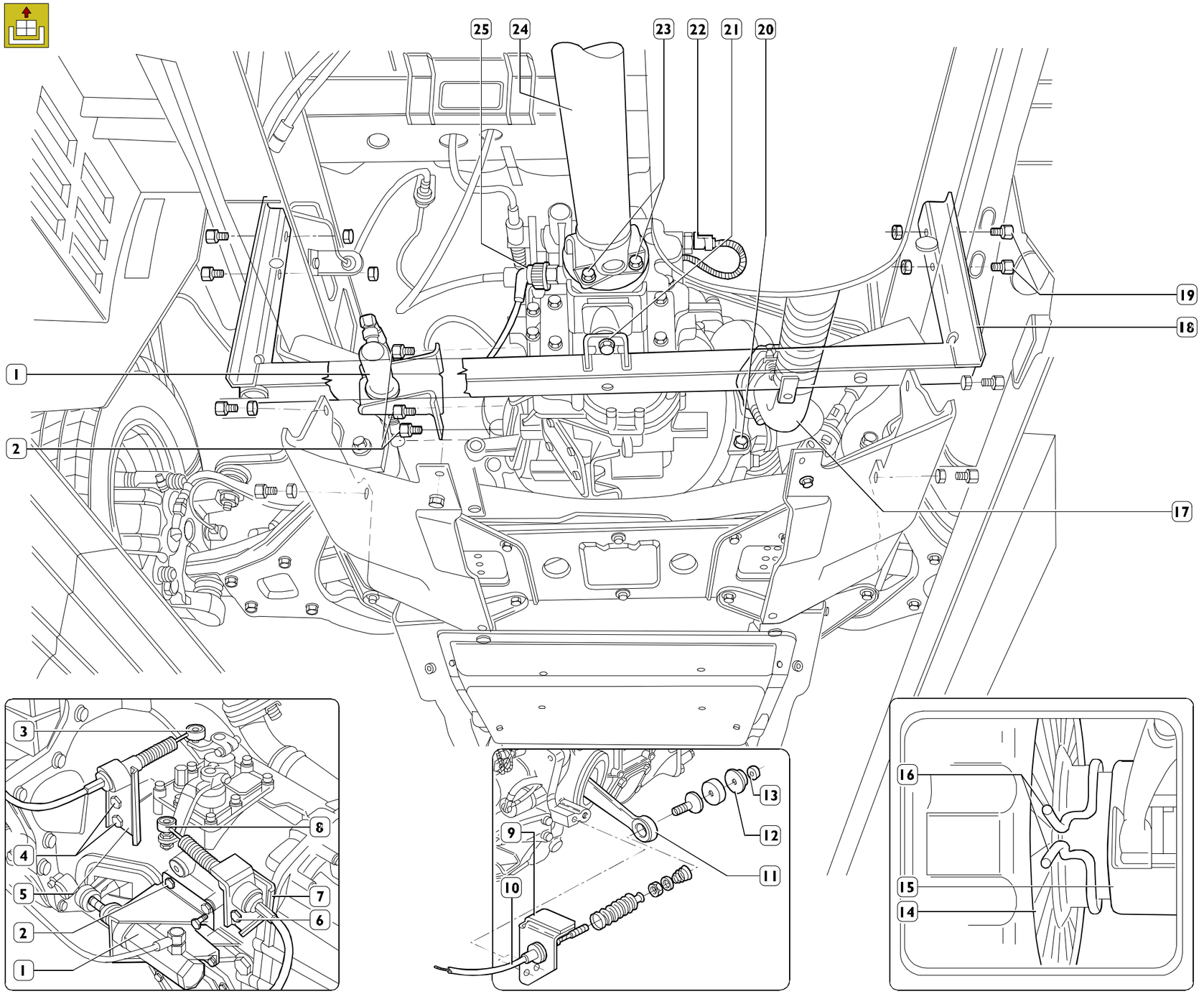

GEAR CONTROL

Gear control is accomplished with two Bowden cables. The **blue** cable (6) with the IVECO trademark operates the lever (4) for engaging gears.
The white cable (1) with the IVECO trademark operates the lever (8) for selecting gears.
The length of the cables measured between the c/c distances of the swivel heads must be:

- ❑ 780 ±2 mm engagement cable (6);
- ❑ 1280 ±2 mm selection cable (1).

The selection (8) and engagement (4) levers must be mounted on their respective shafts so that:

- ❑ between the c/c distance of the pin of the lever (8) for connecting the swivel head and the outside of the bracket (2) there is a distance **X** of 134 ±0.75 mm;
- ❑ between the c/c distance of the pin of the lever (4) for connecting the swivel head (3) and the outside of the bracket (5) there is a distance **Y** of 135 ±0.75 mm.

Before assembly, lubricate the points of connection of the swivel heads with the Bowden cables with TUTELA MRM2 grease.

- ❑ Engagement cable (6):
  - ¤ **Left-hand drive vehicles, 758.5 ±2 mm.**
  - ¤ **Right-hand drive vehicles, 1058.5 ±2 mm.**
- ❑ Selector cable (1):
  - ¤ **Left-hand drive vehicles, 1216 ±2 mm.**
  - ¤ **Right-hand drive vehicles, 1566.5 ±2 mm.**

For vehicles fitting 6S300 transmission and synchronised reverse only.

SELECTION WIRE (1) ADJUSTMENT.

Remove the screw (13) and detach the cover (12) from the gear lever support.

Engage either 1st of 2nd gear and check that there is a distance of 2 mm between the gear lever (10) and the stop (9); proceed as follows if this is not so:

- ❑ remove the ball joint (14) from the connecting ball pin (15);
- ❑ loosen the fastening nut (16);
- ❑ arrange a 2 mm shim (11) between stop (9) and lever (10);
- ❑ hold the lever (10), shim (11) and stop (9) in contact and turn the ball joint (15) until it reaches the ball pin (15);
- ❑ fasten and check that all the gears can be engaged;
- ❑ tightening the fastening nut (16);
- ❑ reattach the cover (12) and tighten the fastening screws (13).

Figure 2

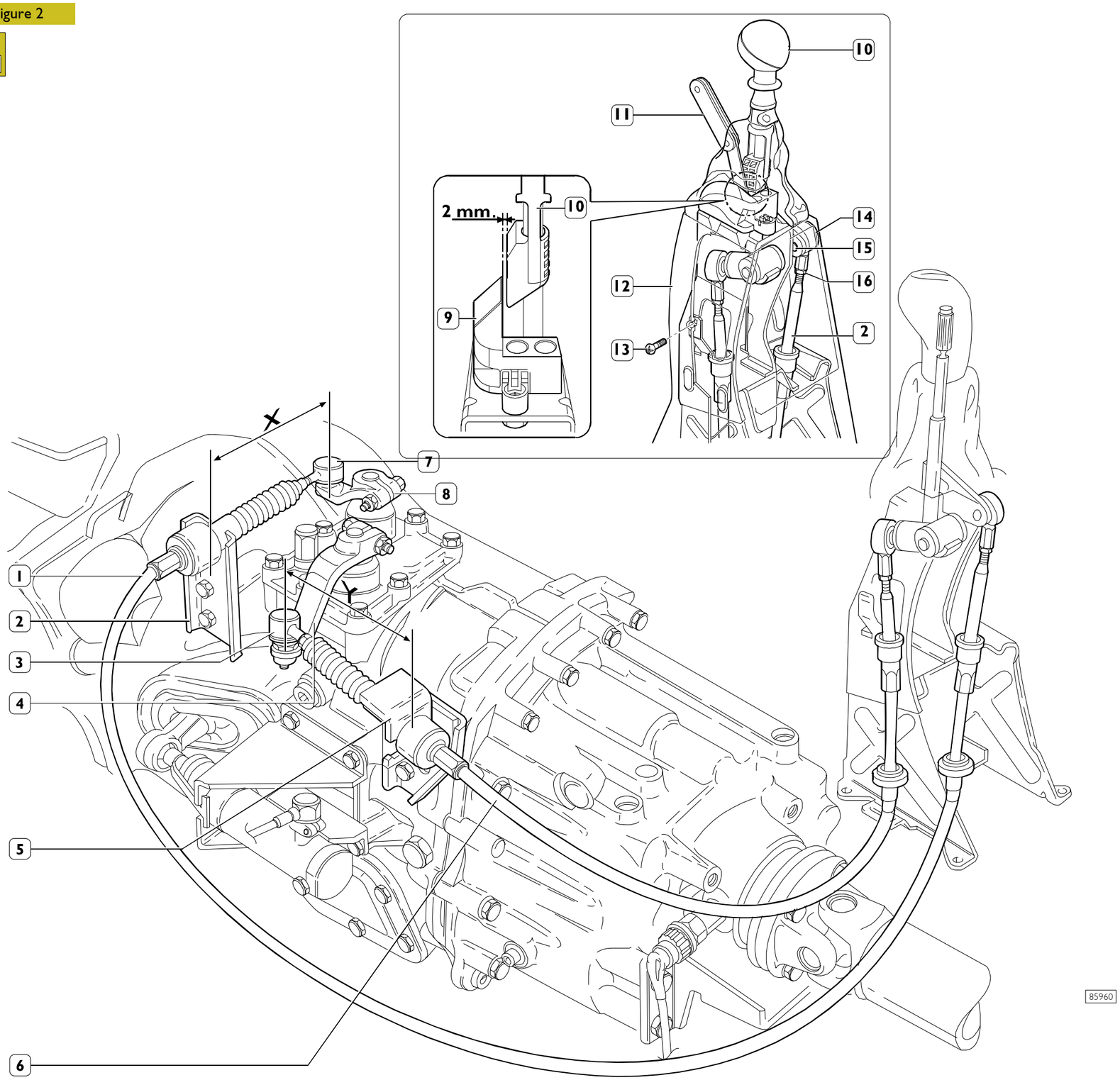

5 S 200 - 5 S 270 Transmissions

Page

GENERAL 11

GEAR SELECTION AND ENGAGEMENT CONTROL 12

SAFETY DEVICES 13

- ❑ Engagement locking device 13
- ❑ Reverse gear anti-engagement device 13

SPECIFICATIONS AND DATA 14

TIGHTENING TORQUES 16

TOOLS 17

OVERHAULING THE TRANSMISSION 23

- ❑ Gear control box 23
- ❑ Disassembly 23
- ❑ Assembly 23
- ❑ Disassembling the transmission 25
- ❑ Disassembling the rear cover bearings 27
- ❑ Disassembling the transmission bearings 27
- ❑ Disassembling the main shaft 28
- ❑ Drive input shaft 30
- ❑ Disassembling the transmission shaft 30

CHECKS 33

- ❑ Transmission 33
- ❑ Hubs - sliding sleeves - forks 33
- ❑ Bearings 33
- ❑ Shafts - gears 33
- ❑ Synchronizing devices 33
- ❑ Mounting the transmission shaft 34
- ❑ Mounting the main shaft 34
- ❑ Rods - forks - selector - driver 37

Page

❑ Disassembly - assembly 37

❑ Mounting the transmission 37

❑ Adjusting the transmission shaft bearing end float 37

GENERAL

The 5 S 200 transmission is mechanical with synchronized engagement of forward gears.

It is composed of a light alloy box (which also serves as a clutch cover), a rear cover (where the speed engagement controls and gearing are housed) and a control box.

There is an opening on the side of the transmission to apply a power take-off.

Drive transmission is accomplished by a set of helical-toothed constant mesh gears, for both forward and reverse gears.

The splined or machined gears are on four shafts: input, main, transmission and reverse gear.

The gears splined on the main and reverse gear shafts idle on straight roller bearings.

The input and main shafts are supported, in the transmission, by watertight, non-adjustable ball bearings.

The transmission shaft is supported, in the transmission, by tapered roller bearings that can be adjusted axially by means of ring shims.

Gear engagement synchronization is accomplished by means of free ring synchronizing devices with a single cone for 5th - 4th - 3rd gears -R.G. and dual cone for 1st - 2nd gears.

Control inside the transmission is accomplished with four rods:

- a main rod to select and engage gears;
- three rods equipped with forks for engaging gears.

The external engagement lever is equipped with two opposing masses. These have the task of attenuating the force of engagement of the control cable (BOWDEN) and consequently the noise level.

Figure 1

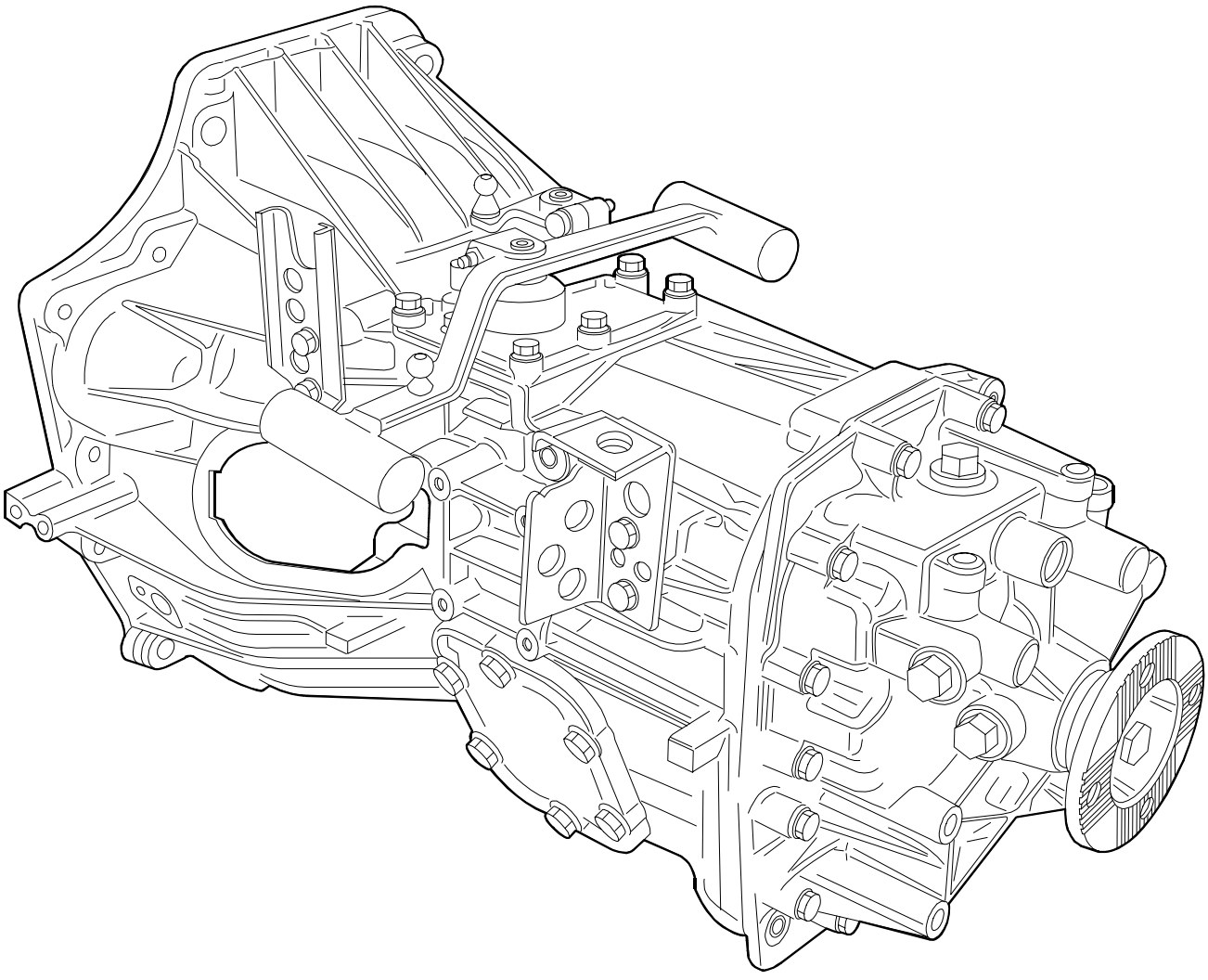

51380

GEAR SELECTION AND ENGAGEMENT CONTROL

The combined action of the selection (2) and engagement (1) levers bring about the rotation and/or axial shift of the rod (4) in two successive stages, engaging the desired gear by means of one of the rods (9, 8 or 7).

First Stage

Depending on the angular position of the selection lever (2), the driver (3) (integral with it) turns the selector (5) with the rod (4) (connected together), setting the selector on the rod of the chosen gear.

Second Stage

Depending on the movement given to the engagement lever (1), the driver (3) (integral with it) shifts the selector (5) (already prepared) axially with the rod (4) and consequently also the engagement rod of the chosen gear.

Position of transmission in neutral and/or ready to select 3rd/4th gear

Figure 2

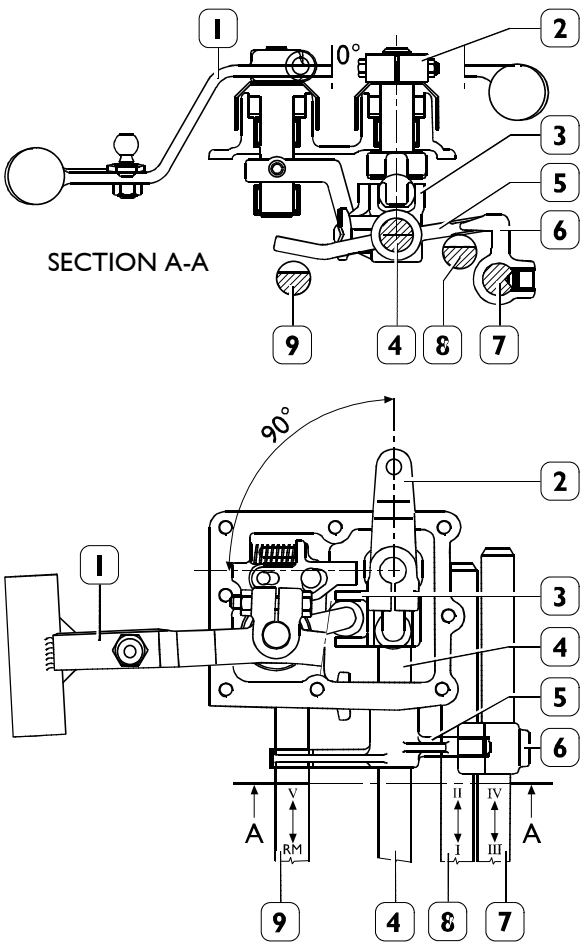

Ready for 1st/2nd gear

Figure 3

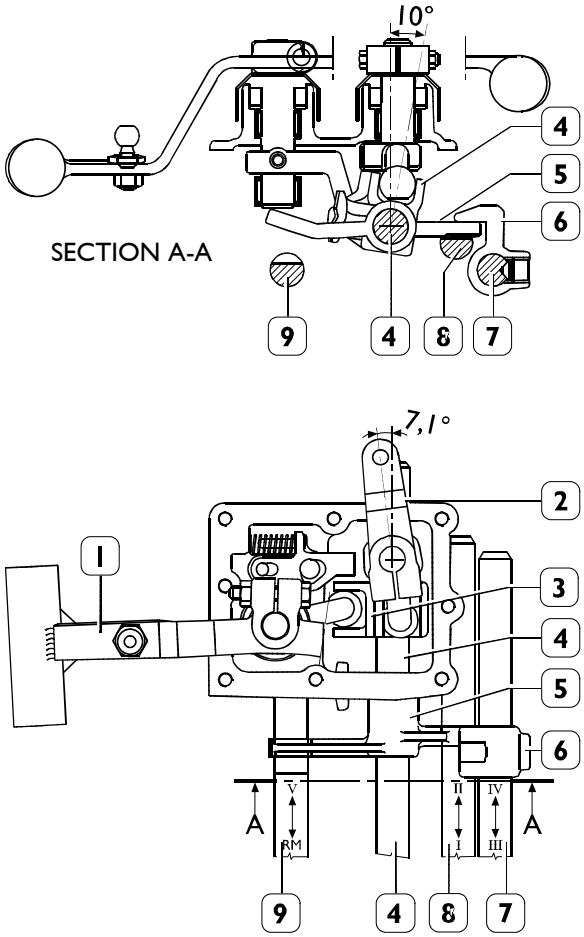

1. Gear engagement lever - 2. Gear selection lever - 3. Driver - 4. Gear selection/engagement control rod - 5. Selector - 6. Driver - 7. Rod for 3rd/4th gear engagement fork - 8. Rod for 1st/2nd gear engagement fork - 9. Rod for 5th/reverse gear engagement fork.

The position of the transmission in neutral coincides with being ready to select 3rd/4th gear.

In this case the vertical axis of the selection lever (2) is exactly 90° from the horizontal control axis, corresponding to no change in the angle of the rod (4).

This arrangement is accomplished by shifting the selection lever (2) anticlockwise by 7.1° to the control axis, which corresponds to a clockwise change in the angle of the rod (4) of 10°.

Ready to select 5th/reverse gear

Figure 4

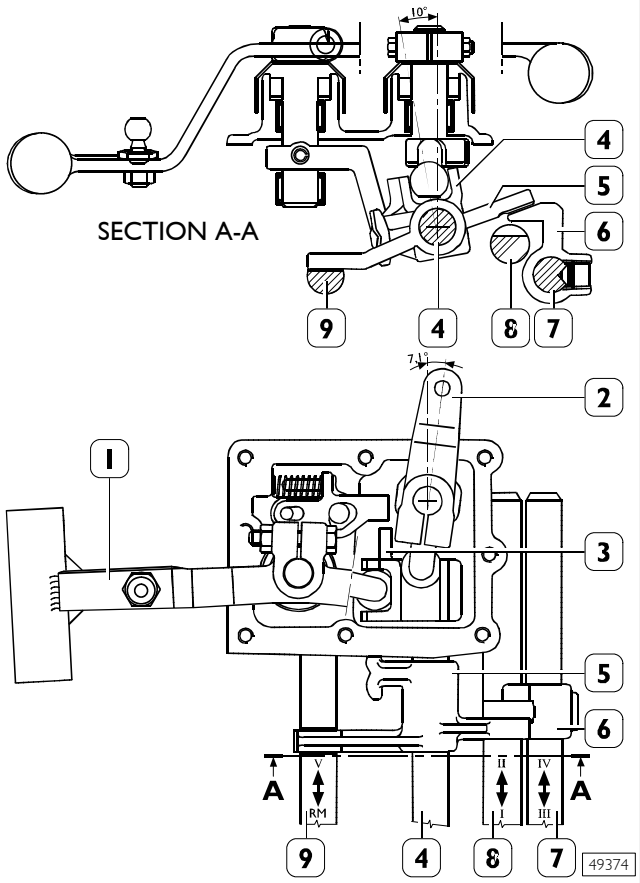

1. Gear engagement lever - 2. Gear selection lever - 3. Driver - 4. Gear selection/engagement control rod - 5. Selector - 6. Driver - 7. Rod for 3rd/4th gear engagement fork - 8. Rod for 1st/2nd gear engagement fork - 9. Rod for 5th/reverse gear engagement fork.

Above presetting is implemented by moving selector (2) clockwise by 7.1° with respect to control vertical axis, that corresponds to 10° anticlockwise angular displacement of rod (4).

SAFETY DEVICES

The transmission is equipped with two mechanical safety devices:

Engagement locking device to prevent more than one gear getting engaged at the same time.

Reverse gear anti-engagement device when passing from 5th to 4th gear.

Engagement locking device

Figure 5

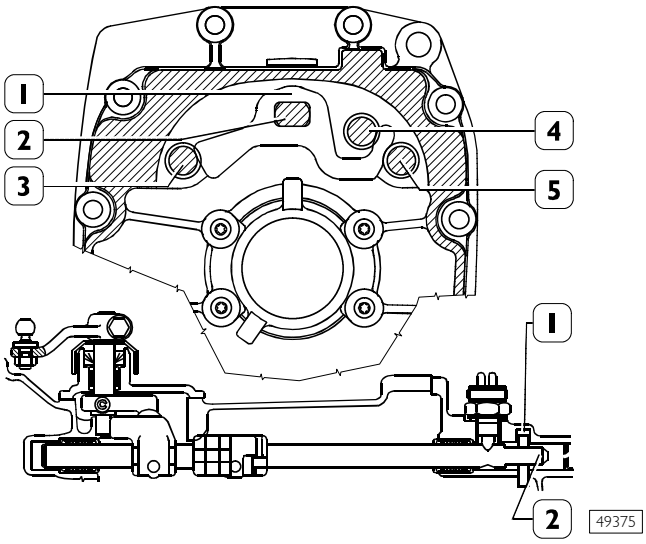

This device is composed of a plate (1), housed in the rear cover, operated by the gear selection/engagement control rod (2). When selecting/engaging a gear, the rod (2) simultaneously turns the plate (1) in which it is inserted. In this way, the plate (1) will free itself from the slot of the rod involved in engaging the gear and will lock the other two rods by inserting itself into their slots.

Reverse gear anti-engagement device

Figure 6

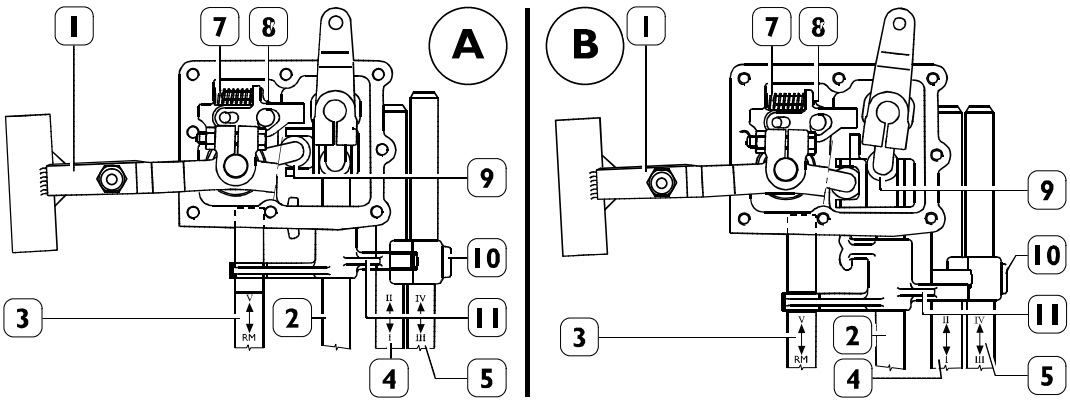

This device is composed of a plate (8) and a spring (7) housed in the transmission. When passing from the 4th gear position (Figure A) to the 5th gear position (Figure B), the driver (9), moving in the direction of the arrow, disengages the plate (8), which under the action of the spring (7) moves onto the driver (9) preventing reverse gear from getting engaged in the opposite manoeuvre.

SPECIFICATIONS AND DATA

	TRANSMISSION	5 S 200	5 S 270
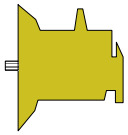	Type	Mechanical	
	Input torque	250 Nm	270 Nm
	Weight	44.6 kg	
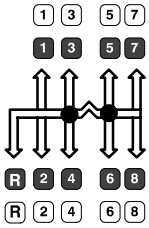	Speeds	5 forward speeds 1 reverse speed	
	Speed control	Mechanical	
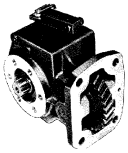	Power take-off	Optional	
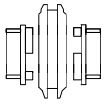	Speed engagement: Forward speeds ❑ 5th / 4th / 3nd ❑ 2nd / 1st Reverse speed Speed retention mechanism	 Single-cone synchronizer Dual-cone synchronizer Single-cone synchronizer Sliding sleeves retained by pawls and springs	
	Gears	Helical-toothed constant mesh gears	
	Gear ratio First Second Third Fourth Fifth (overdrive) Reverse	 4.99 2.60 1.52 1.00 0.78 4.51	
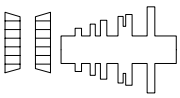	Shaft bearings: Main shaft Transmission shaft	 watertight ball bearing tapered roller	

	TRANSMISSION	5 S 200	5 S 270
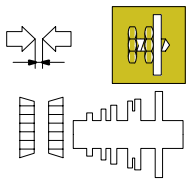	Transmission shaft bearing end play:	0 ÷ 0.05 mm	
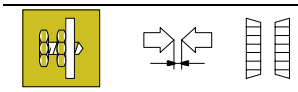	Transmission shaft bearing end play adjustment	by shims	
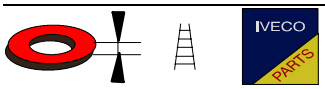	Shim thickness for transmission shaft bearing end play adjustment	2.00 - 2.30 - 2.45 mm with 0.05 mm progressive sequence	
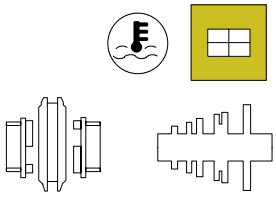	**Main shaft** **Assembly temperatures:** sliding sleeve hubs 2nd and 3rd speed gear bushings and spacer 5th speed gear spacer	 150°C 170°C ÷ 160°C 90°C	
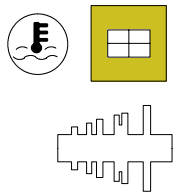	**Secondary shaft** **Assembly temperatures:** bearings 5th speed gear 5th speed gear driving load 5th speed gear removing load	 80°C (max 120°C) 140°C ÷ 170°C 31 KN 50 KN	
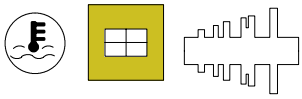	**Input shaft** **Assembly temperatures:** front bearing*	 80°C (max 120°C)	
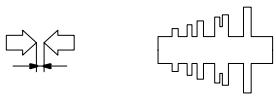	Gear axial backlash: 1st - 3rd - 4th - R - 5th speed 2nd speed	 0.15 ÷ 0.3 mm 0.25 ÷ 0.4 mm	
	3rd and 4th speed sliding sleeve hub retaining circlip axial backlash	0 ÷ 0.05 mm	
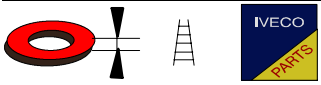	3rd and 4th speed sliding sleeve hub retaining circlip thickness	2 - 2.85 mm with progression of 0.05 mm	
	Transmission shaft rear bearing retaining ring end float	0 ÷ 0,05 mm	
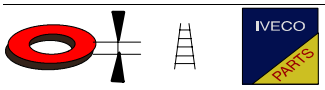	Transmission shaft rear bearing retaining ring thickness	2.05 ÷ 2.45 mm with progression of 0.05 mm	
	LOCTITE sealant	242 510 5206	
	Type of oil: Quantity	**TUTELA TRUCK GEARLITE** 2 litres 1.8 kg	

* = Do not use hot air equipment to heat bearing.

TIGHTENING TORQUES

Figure 7

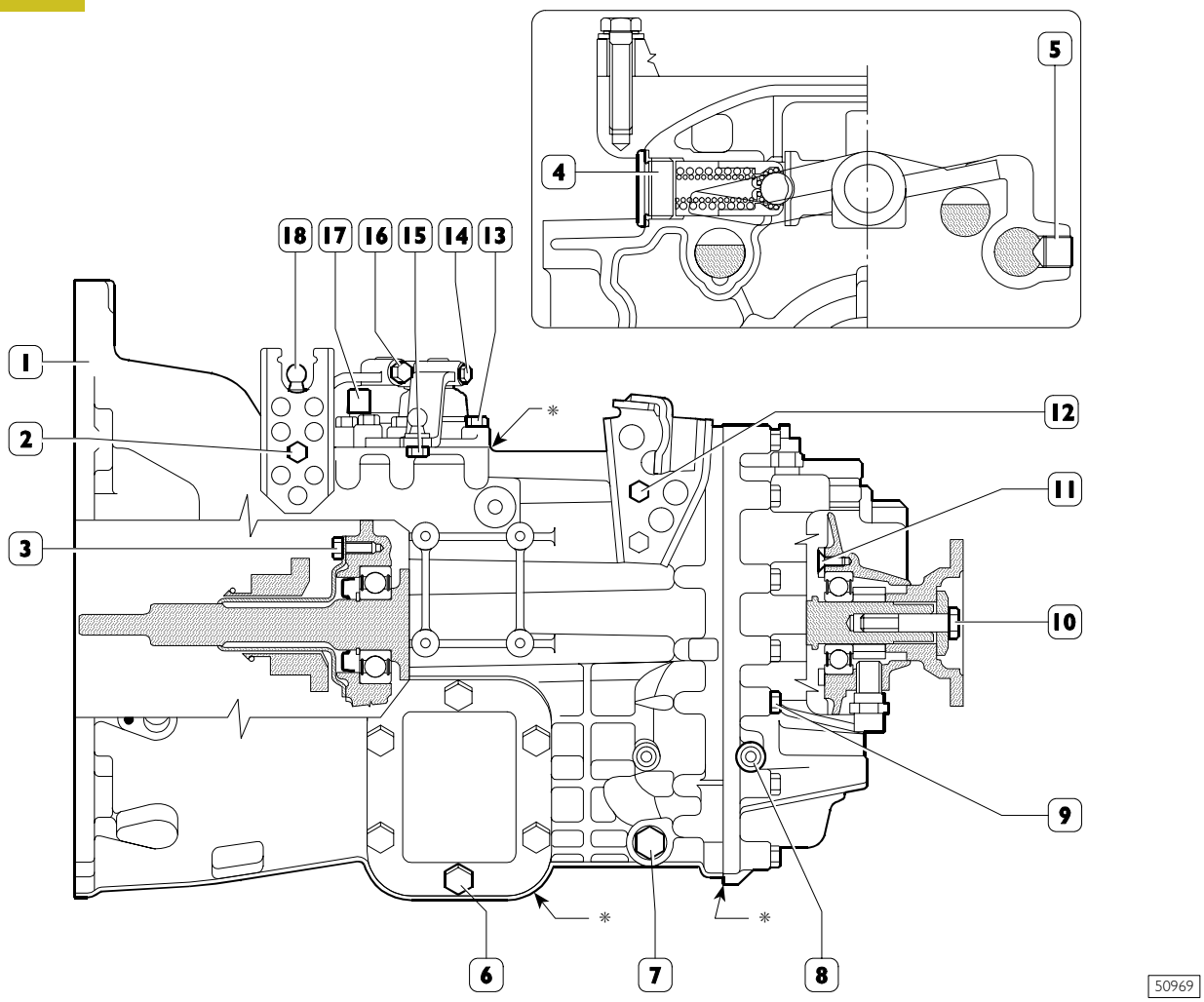

	DESCRIPTION	TORQUE	
		Nm	kgm
1	Clutch housing, screw to fasten clutch housing to chassis	80	8
2	Screw to fasten clutch housing to box	23 ±15%	2.3 ±15%
3	Constant mesh shaft cover fastening screw	23 ±15%	2.3 ±15%
4	Spring retaining plug	32 ±10%	3.2 ±10%
5	Grub screw securing gear selection sector to rod	60 ±15%	6 ±15%
6**	Screw securing p.t.o. side cover	46 ±15%	4.6 ±15%
7	Plug	28 ÷ 30 ±15%	2.8 ÷ 3 ±15%
8	Screw securing reverse gear shaft	22 ±15%	2.2 ±15%
9	Screw securing rear cover	23 ±15%	2.3 ±15%
10	Screw locking sleeve for transmission coupling on main shaft	120 ±15%	12 ±15%
11●	Screw securing ball bearing retaining ring	9.5 ±15%	0.9 ±15%
12	Screw securing control cable bracket	23 ±15%	2.3 ±15%
13	Screw securing gear control mounting	23 ±15%	2.3 ±15%
14	Nut for screw securing lever to control rod	34 ±15%	3.4 ±15%
15	Nut securing articulation pin to control lever	23 ±15%	2.3 ±15%
16	Nut for screw securing lever to control rod	34 ±15%	3.4 ±15%
17	Oil vapour breather	10 ±15%	1 ±15%
18	Nut to secure articulation pin to control lever	23 ±15%	2.3 ±15%

* Spread LOCTITE 5206 sealant on the contact surfaces

● Spread LOCTITE 242 on the thread

** Spread LOCTITE 510 on the thread

TOOLS

TOOL NO.		DESCRIPTION
99322205	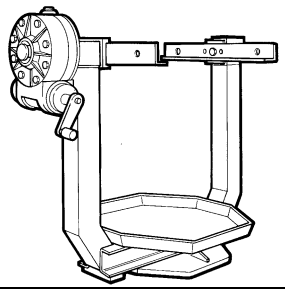	Assemblies overhaul revolving stand
99322225	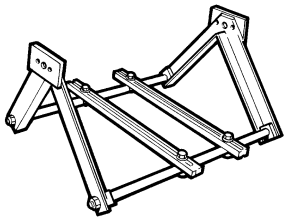	Unit support (to use with stand 99322205)
99340205	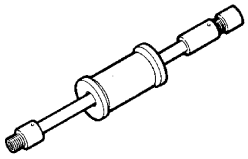	Percussion extractor
99341002	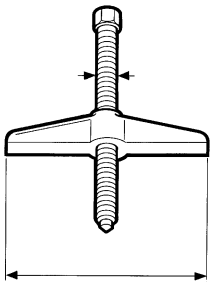	Single-acting scaffold
99341004	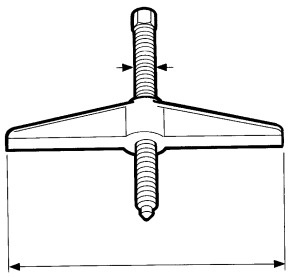	Single-acting scaffold
99341012	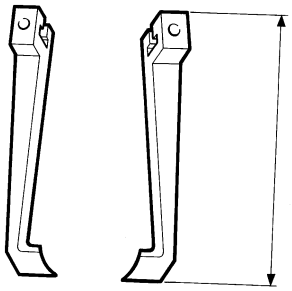	Pair of brackets

TOOLS

TOOL NO.		DESCRIPTION
99341015	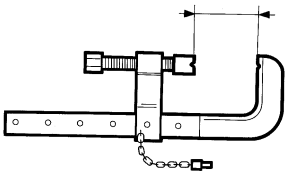	Press
99341017	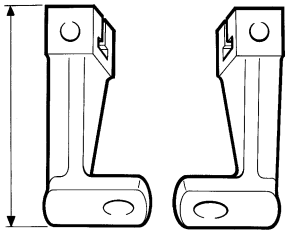	Couple of brackets whit hole
99345003	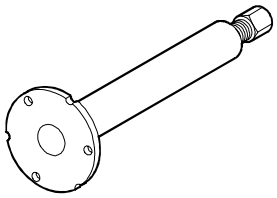	Extractor for gearbox front half-casing
99348001	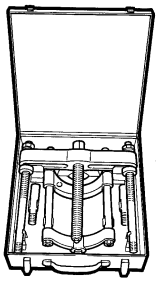	Extractor with locking device
99348004	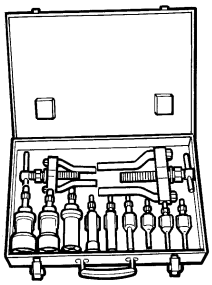	Universal male extractor from 5 to 70 mm
99360521	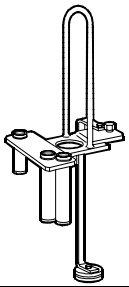	Tool to extract and insert main shaft, transmission shaft and rod - fork assembly

TOOLS

TOOL NO.		DESCRIPTION
99370006	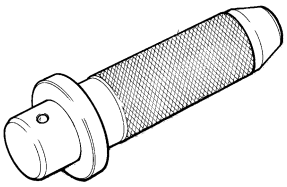	Handle for interchangeable drivers
99370007	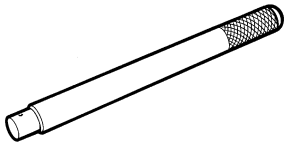	Handle for interchangeable drivers
99370234	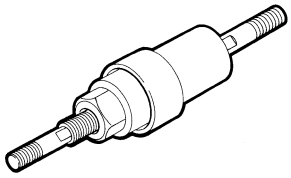	Tool for fitting main shaft in rear bearing and fitting output flange on main shaft
99370317	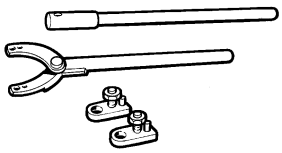	Reaction lever with extension for holding flange
99370629	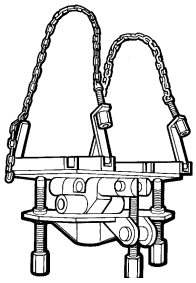	Transmission support during removal from and refitting to vehicle
99371057	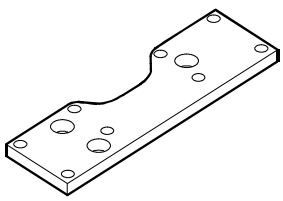	Bracket for supporting gearbox during overhaul (use with 99322205-99322225)

TOOLS

TOOL NO.		DESCRIPTION
99374091	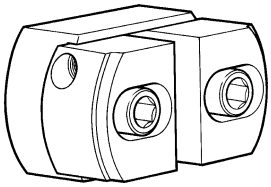	Punch for fitting bearing external races (dia. 55 ÷ 69 mm) (use with 99370007)
99374452	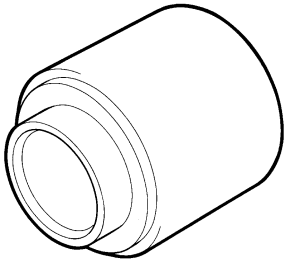	Keying device to fit gasket on transmission rear cover (use with 99370006)
99374453	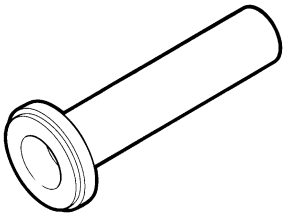	Keying device to fit gasket on transmission

Figure 8

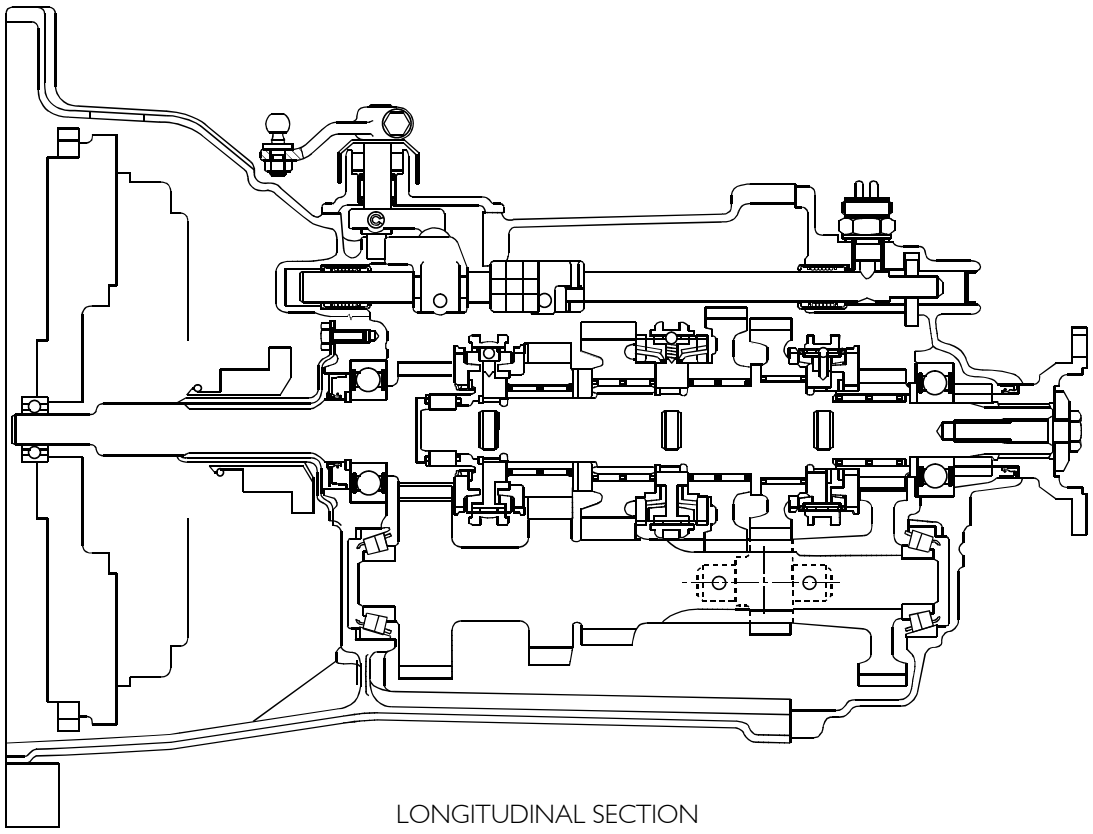

LONGITUDINAL SECTION

Figure 9

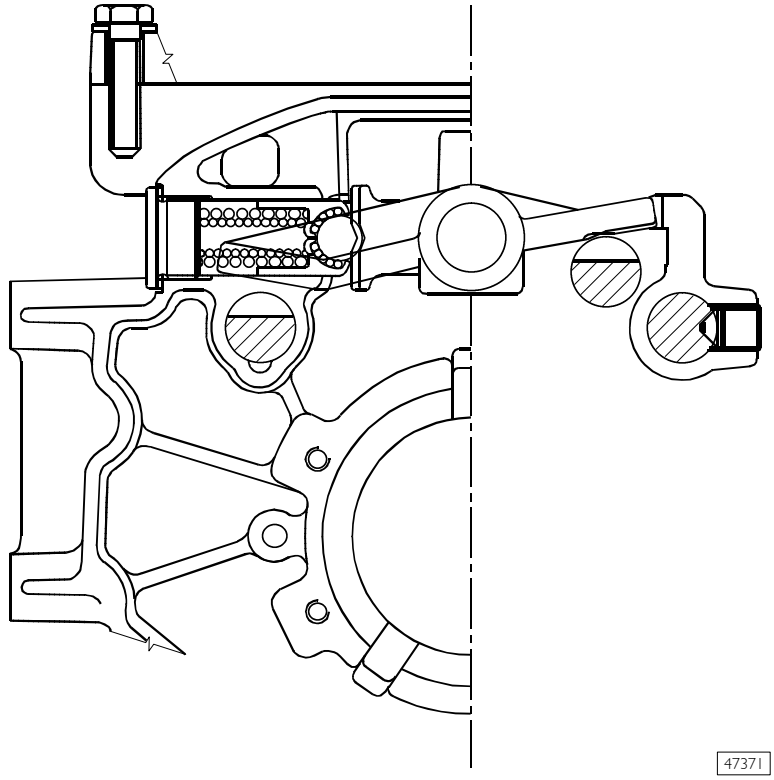

47371

TRANSVERSE SECTION ON THE GEAR SELECTION/ENGAGEMENT ROD POSITIONING PUSH ROD

Figure 10

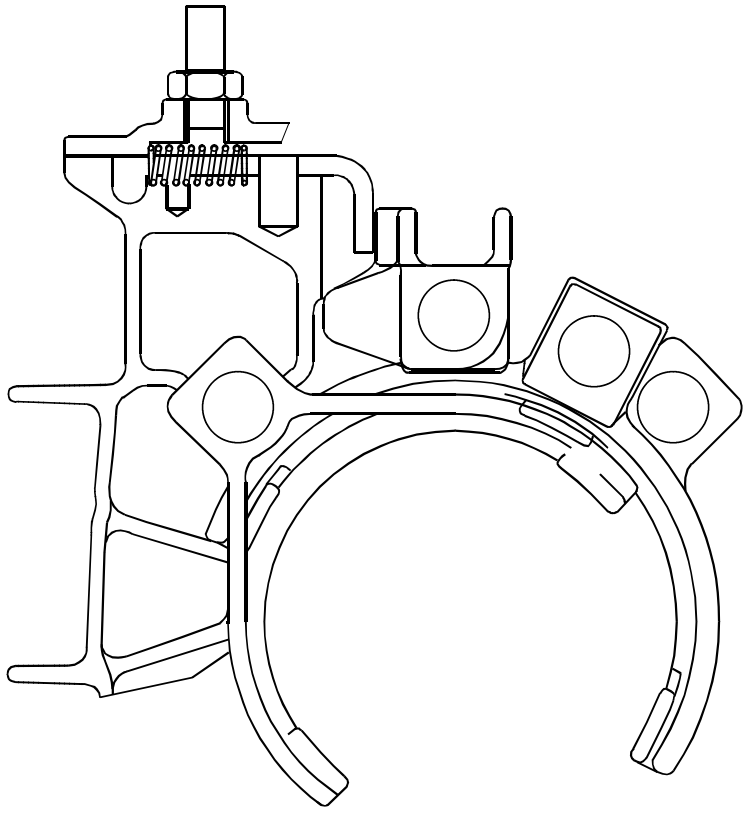

47369

TRANSVERSE SECTION ON THE REVERSE GEAR ANTI-ENGAGEMENT DEVICE

Figure 11

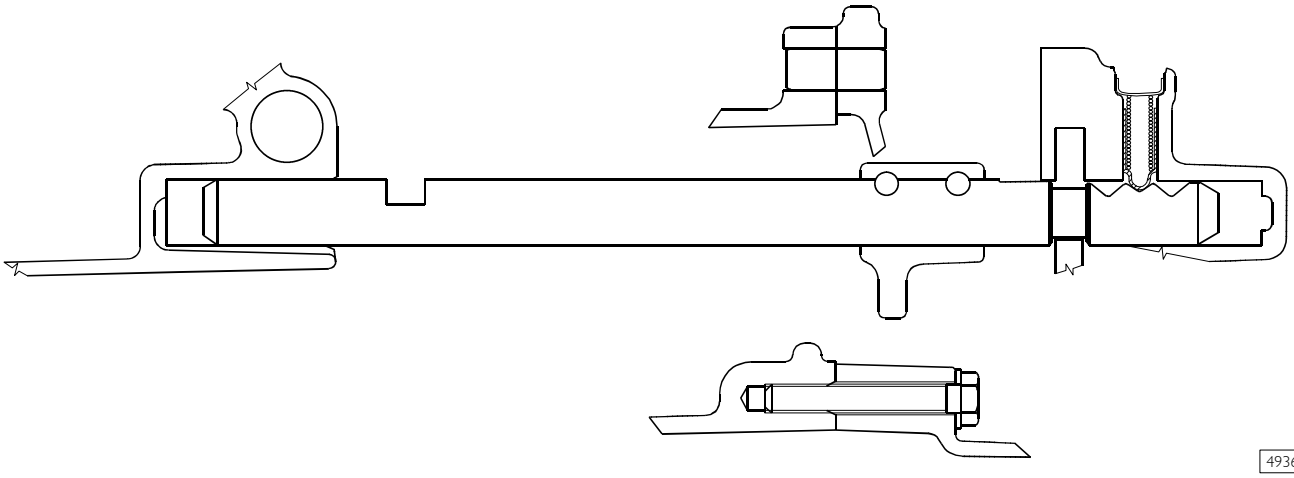

SECTION ON GEAR ENGAGEMENT ROD POSITIONING PAWLS

Figure 12

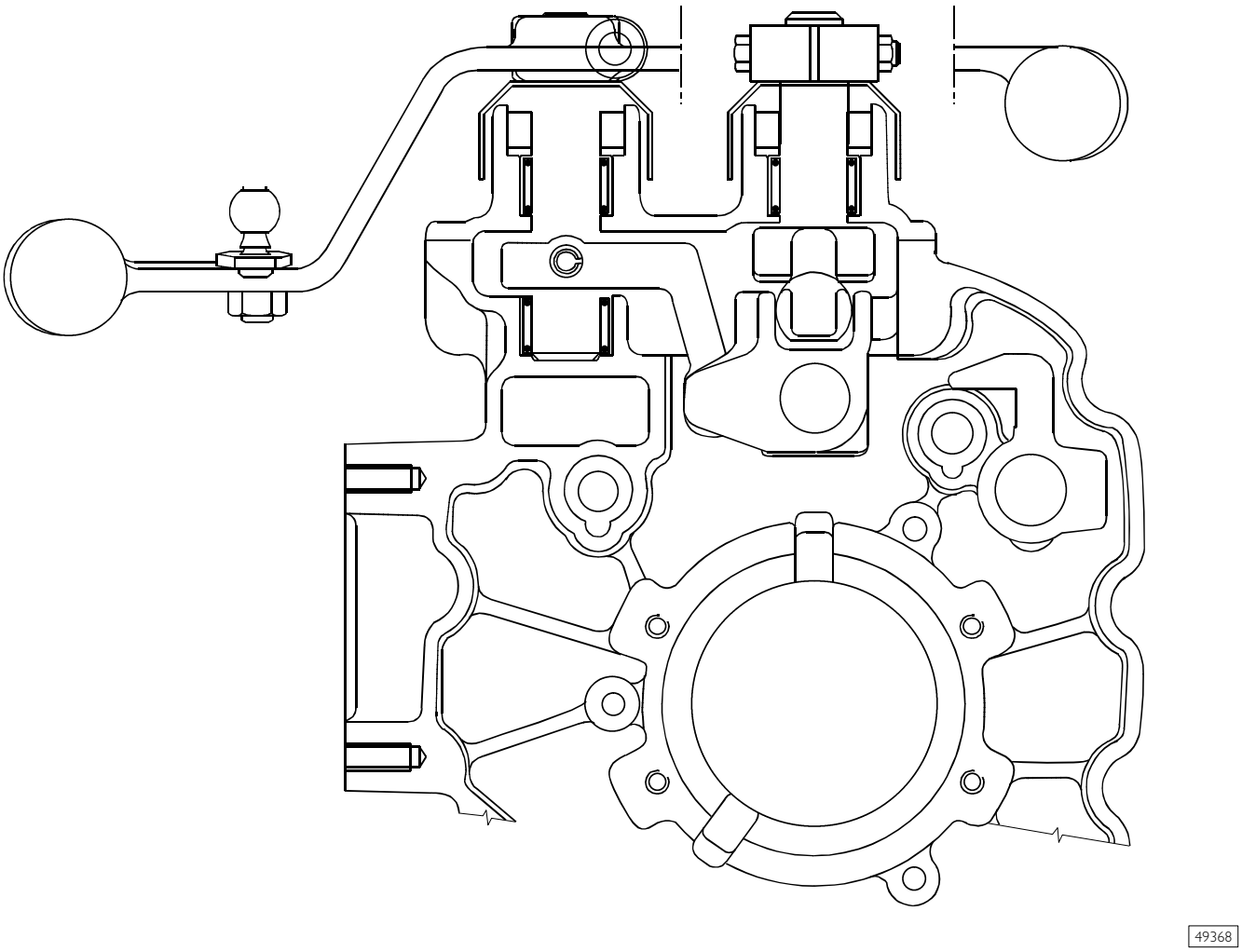

TRANSVERSE SECTION ON INTERNAL CONTROL BOX

530210 OVERHAULING THE TRANSMISSION

Figure 13

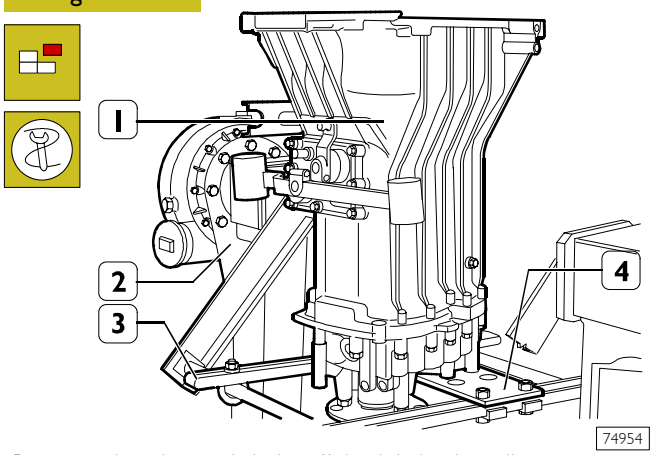

Remove the plug and drain off the lubricating oil.
Fit the gearbox (1) with the bracket 99371057 (4) and secure this to the brackets 99322225 (3) on the rotary stand 99322205 (2).

530220 Gear control box Disassembly

Figure 14

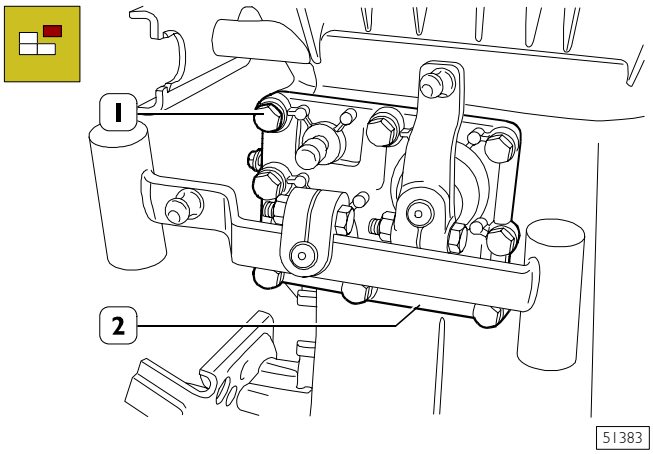

Take out the fixing screws (1) and remove the gear control box (2).

Figure 15

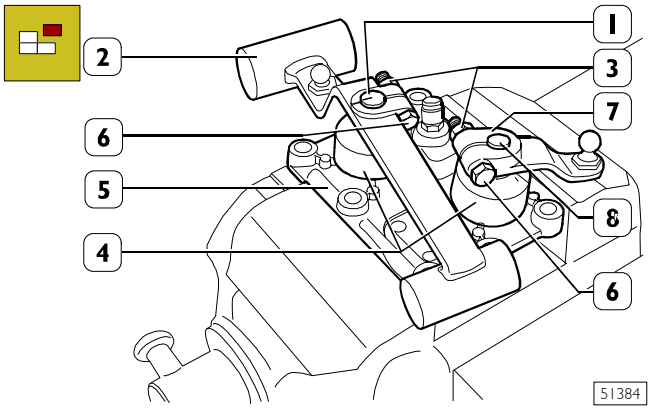

Mark the assembly position of the levers (2 and 7) on their respective shafts (1 and 8). Loosen the nuts (3) for the retaining screws (6).
Extract the levers (2 and 7) from the shafts (1 and 8) and extract these from the box (5). Take off the caps (4).

Figure 16

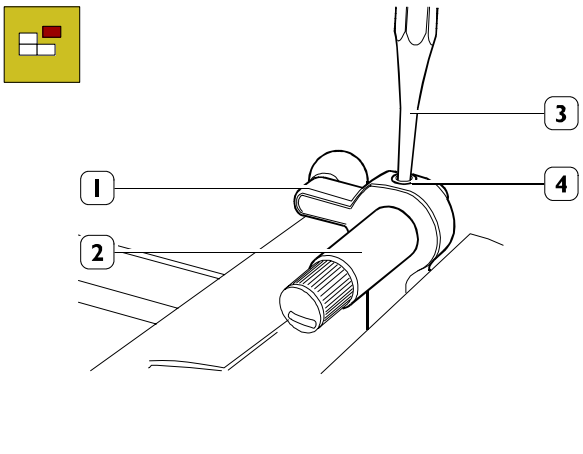

With a punch (3), remove the spring pin (4) and extract the shaft (2) from the internal lever (1).
Repeat these steps for the other shaft.

Figure 17

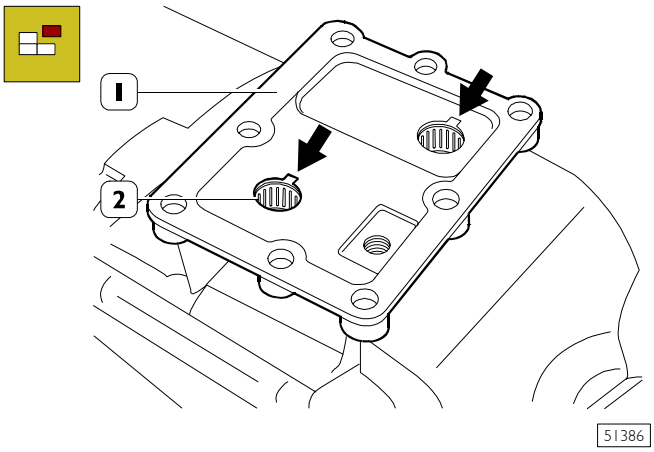

Use a punch on the point shown by the arrow and eject the O-rings and roller bushes (2) from the box (1).

Assembly

Figure 18

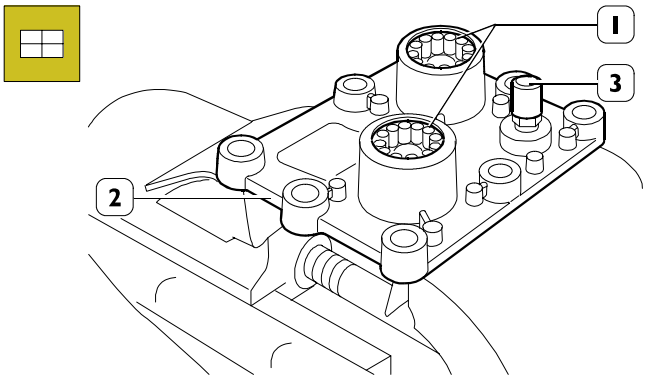

Thoroughly clean the oil vapour vent (3).
With a suitable punch, mount the roller bearings (1) in the box (2).

Figure 19

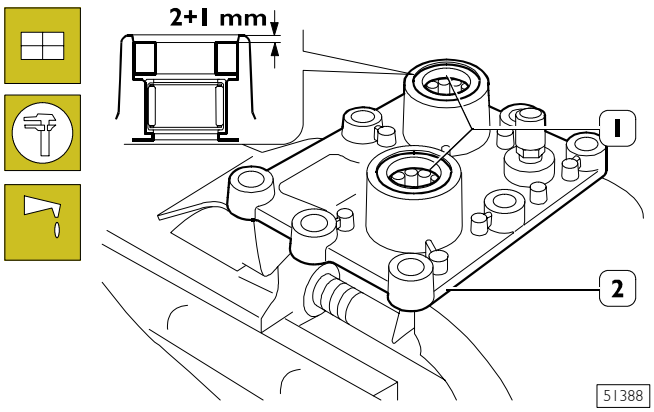

Using a suitable punch, mount the O-rings (1) in the box (2), positioning them at the height shown.

Pack the gap between the O-ring and roller bearing with grease.

Figure 20

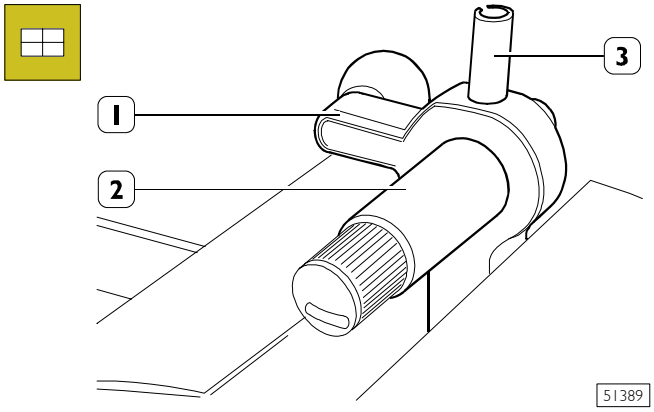

Mount the selection and engagement levers (1) on their respective shafts (2) and fasten them with the spring pins (3).

The spring pin (3) must be positioned with the cut horizontal.

Figure 21

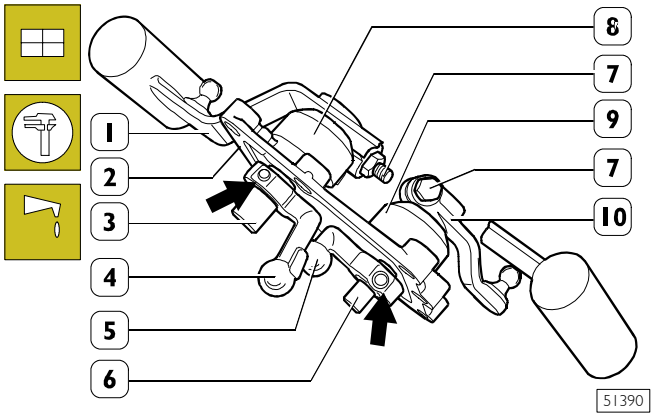

Lubricate the roller bearings (1, Figure 19) with TUTELA MR3 grease and mount the shafts (3 and 6) complete with the internal levers (4 and 5) in the box (2). Mount the caps (8 and 9) and levers (1 and 10) on the shafts (3 and 6) in the position marked during disassembly without tightening the nuts for the fixing screw (7).

Figure 22

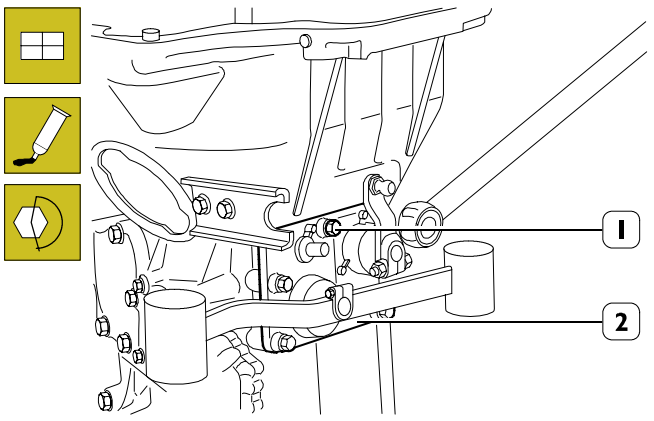

Thoroughly clean the mating surfaces of the gear control box (2) and apply LOCTITE 5206 sealant on them.

Fit the box (2) on the transmission, taking care that the levers and shafts are positioned correctly in their respective seats.

Tighten the screws (1) to the required torque.

Figure 23

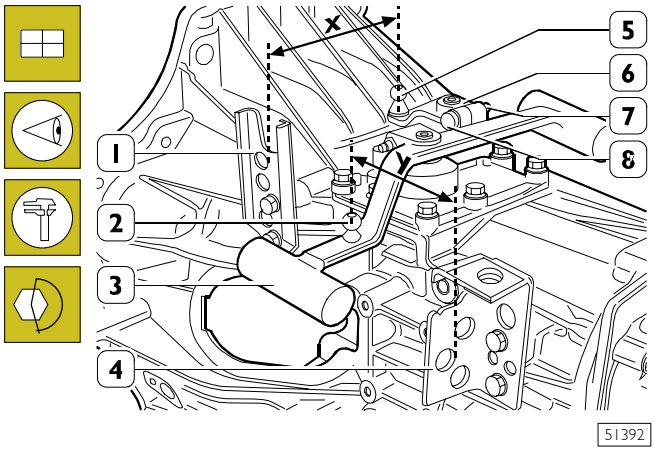

Check the assembly of the selection (6) and engagement (3) levers. The selection (6) and engagement (3) levers must be mounted on their respective shafts so that:

- between the c/c distance of the pin (5) of the selection lever (6) and the outside of the bracket (1) there is a distance **X** of 134 mm;
- between the c/c distance of the pin (2) of the engagement lever (3) and the outside of the bracket (4) there is a distance **Y** of 135 mm.

If a different value is measured, orientate the lever concerned on the respective shaft appropriately.

Then tighten the nuts (7) for the screws (8) to the required tightening torque.

Disassembling the transmission

Figure 24

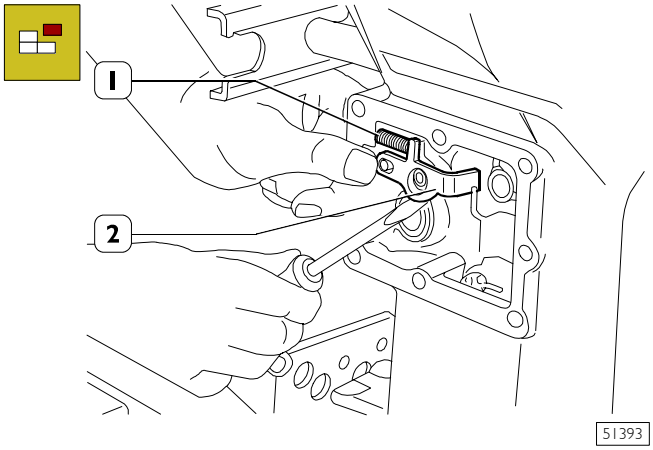

Dismantle the gear control box as described under the relevant heading.

Remove the reverse gear stop plate (2) and the spring (1).

Figure 25

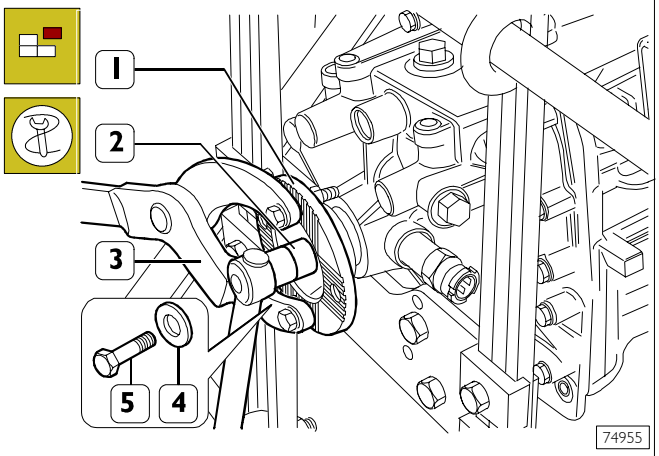

Block rotation of the sleeve (1) by applying the lever 99370317 (3). With the bushing (2) remove the screw (5) with the washer beneath (4).

Take out the lever 99370317 (3).

Figure 26

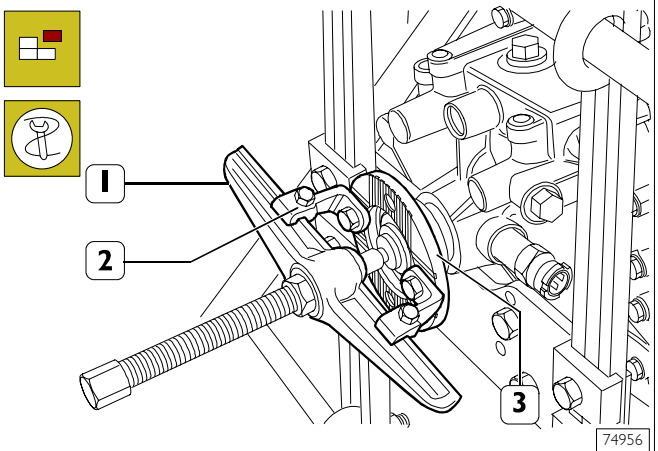

Apply the bridge 99341002 (1) and clamps 99341016 (2) onto the sleeve (3).
Extract the sleeve (3) from the main shaft.

Figure 27

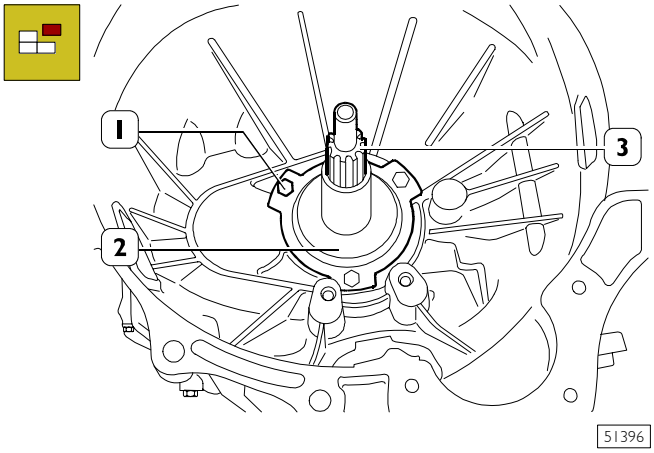

Remove the screws (1) and take off the cover (2) protecting the input shaft (3).

Figure 28

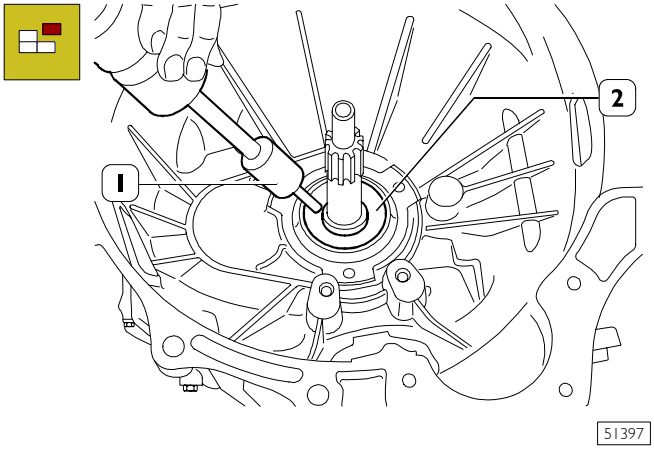

Drill the O-ring (2).

Using a suitable hook and extractor (1), remove the O-ring (2) from the transmission.

Figure 29

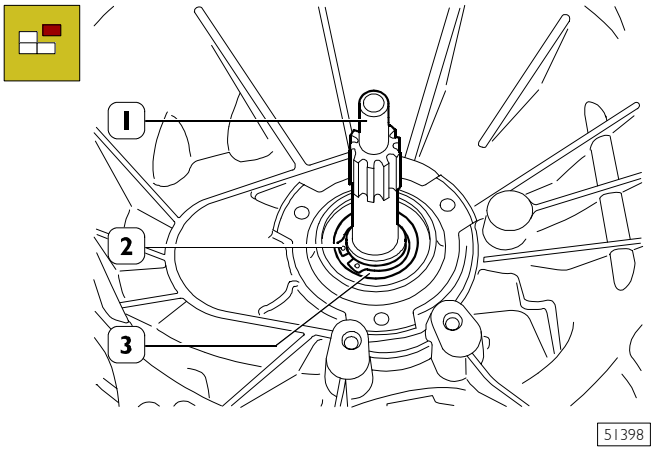

Remove the circlip (2) retaining the front bearing (3) from the input shaft (1).

Figure 30

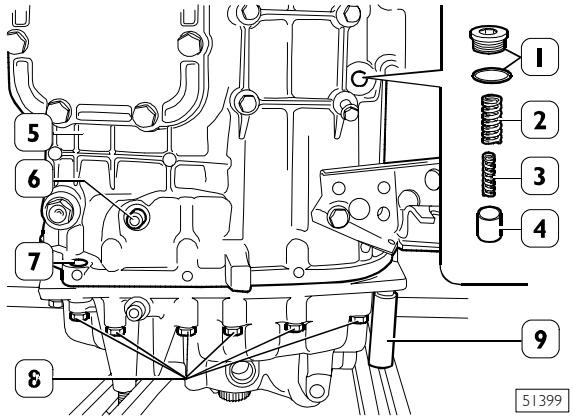

Take out the plug with the washer (1), extract the springs (2 and 3) and the push rod (4). Remove the screw (6) securing the reverse gear shaft to the transmission (5). Push the two centring pins (7) downwards to free them from the transmission (5). Remove the screws (8) securing the rear cover (9) to the transmission (5).

Figure 31

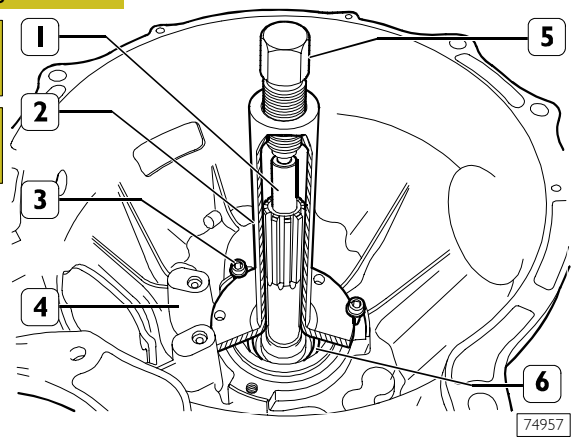

Fit the drive input shaft (1) with tool 99345003 (2) and secure this to the gearbox (4) with screws (3). Screw down the screw (5) of the tool (2) to extract the gearbox from the bearing (6).

Figure 32

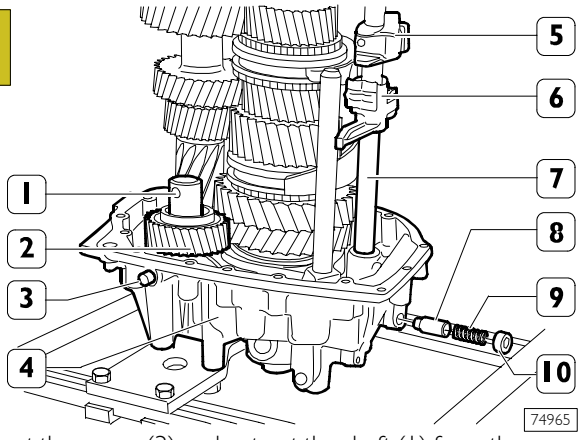

Take out the screw (3) and extract the shaft (1) from the rear cover (4). Remove the reverse gear (2). Drill the cups (10) screw a special screw into them; with the aid of the screw, extract the cups (10) from the rear cover (4). Remove the springs (9) and the pawls (8). Extract the rod (7) together with the selector (5) and driver (6).

Figure 33

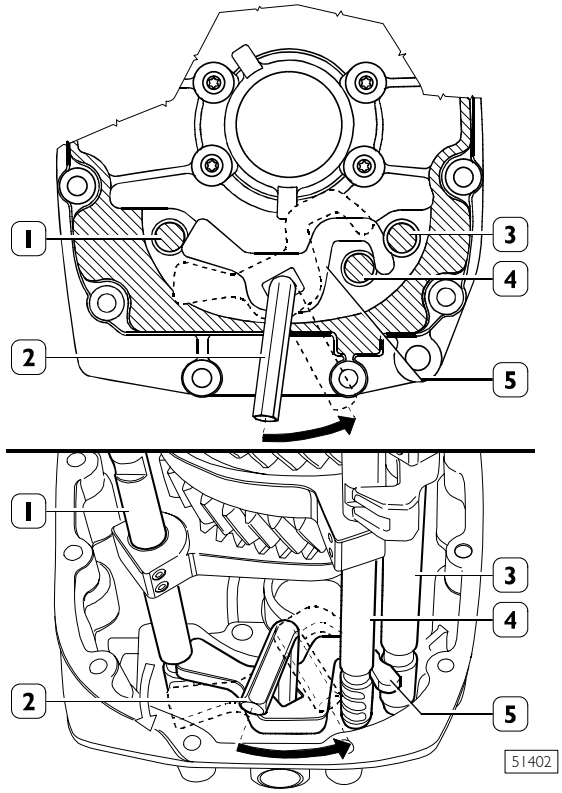

Insert an Allen wrench (2) into the engagement locking plate (5). Turn the Allen wrench (2) to position the engagement locking plate (5) outside the slots (⇒) in the engagement rods (1, 3 and 4).

Figure 34

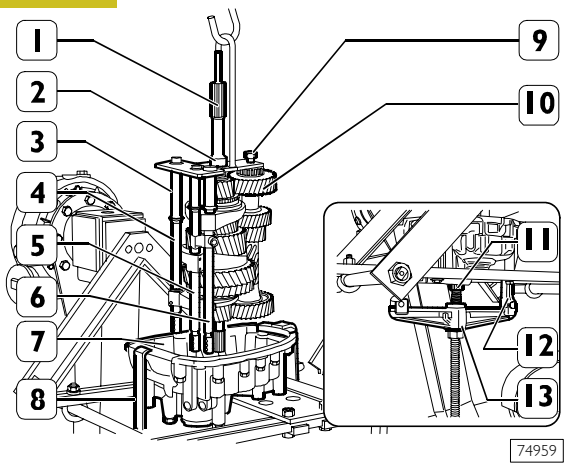

Mount the tool 99360521 (3) onto the rods (4, 5 and 6), on the input shaft (1) and on the transmission shaft (10). Secure the tool 99360521 (3) on the input shaft (1) with the retaining ring (2) and with the screw (9) to the transmission shaft (10). Hook the tool 99360521 (3) onto the lift. Apply the extractor composed of the bridge 99341004 (13) and ties 99341012 (12) onto the rear cover (7). Use the screw of the bridge (13) and work on the lift to extract the main shaft (11) from the rear bearing. Set this assembly on the workbench. Remove the tool 99360521 (3) and separate the transmission shaft (10), input shaft with relative synchronizing ring and the rods (4, 5 and 6) from the main shaft.

Disassembling the rear cover bearings

Figure 35

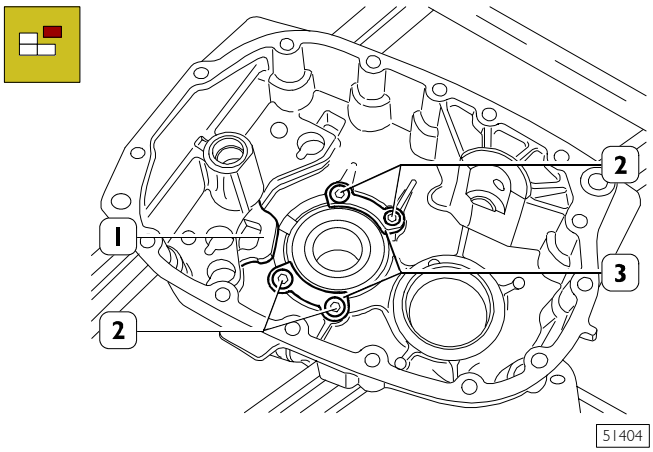

Remove the screws (2) securing the plates (3).

Take out the plates (3) and the engagement locking plate (1).

Figure 36

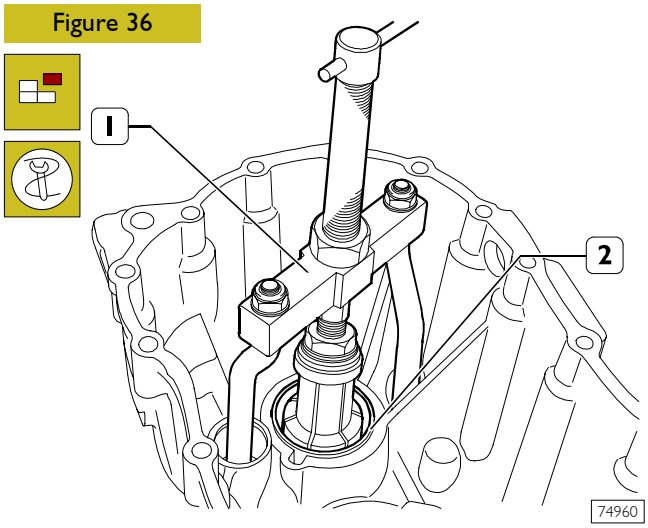

Using universal extractor 99348004 (1), remove the outer ring (2) of the transmission shaft bearing.

Figure 37

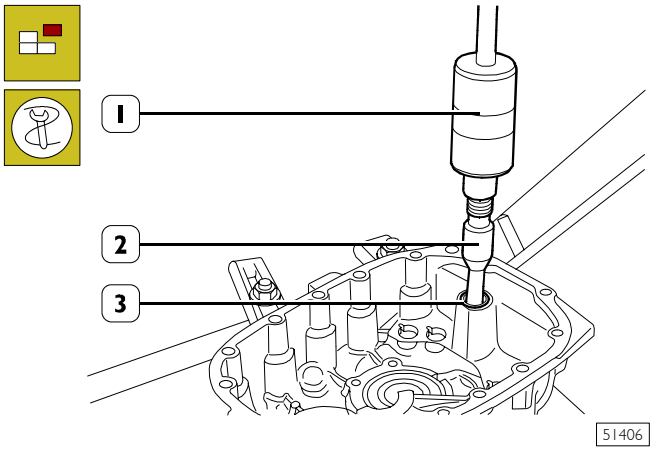

Using the percussion extractor 99340205 (1) and part 99348004 (2), extract the bushing with the ball bearings (3).

Figure 38

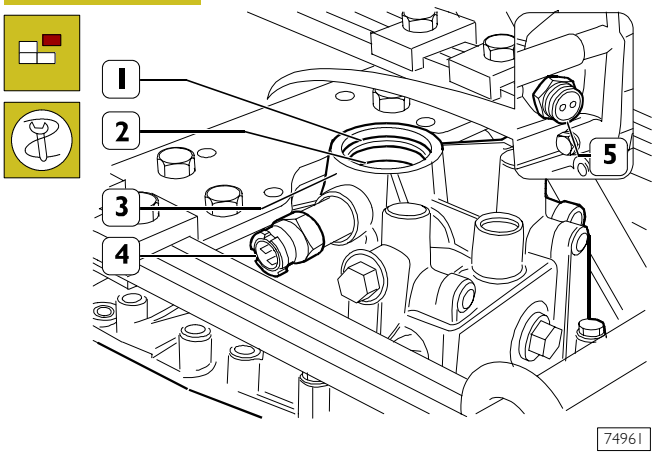

Turn over the rear cover (3). Take out the O-ring (1) and the "phonic wheel" (2). Using a suitable punch, remove the ball bearing (4, Figure 36). Remove the tachograph sensor (5) and the reversing light switch (4).

Disassembling the transmission bearings

Figure 39

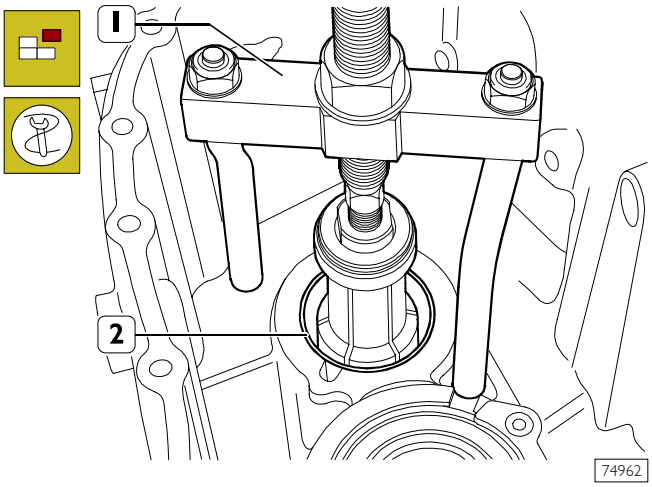

Using universal extractor 99348004 (1), remove the outer ring (2) of the transmission shaft bearing.

Figure 40

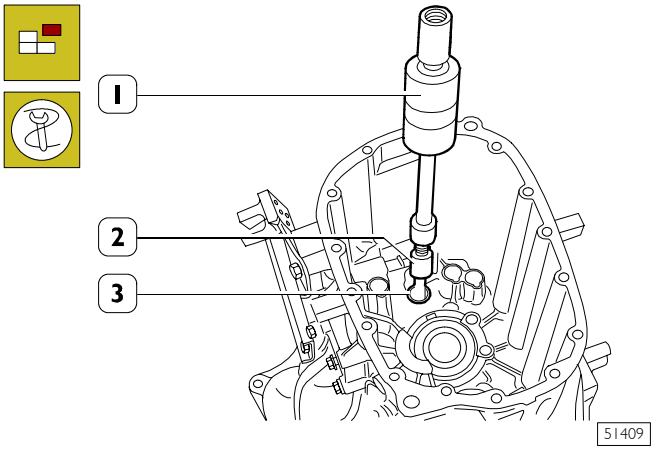

Using the percussion extractor 99340205 (1) and part 99348004 (2), extract the bushing with the ball bearings (3).

Figure 41

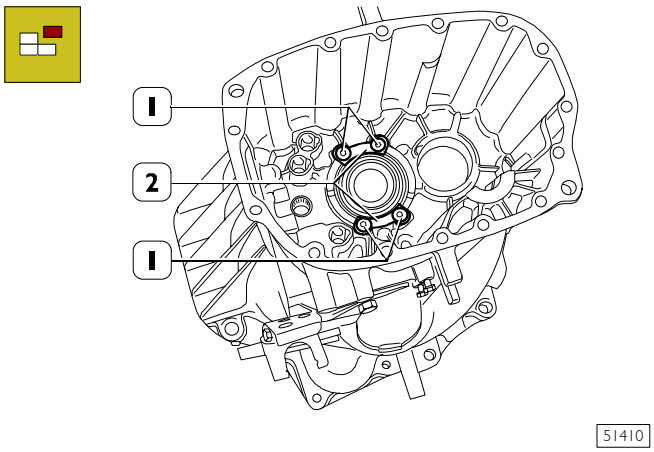

Remove the screws (1) securing the plates (2).

Take out the plates (2).

Figure 42

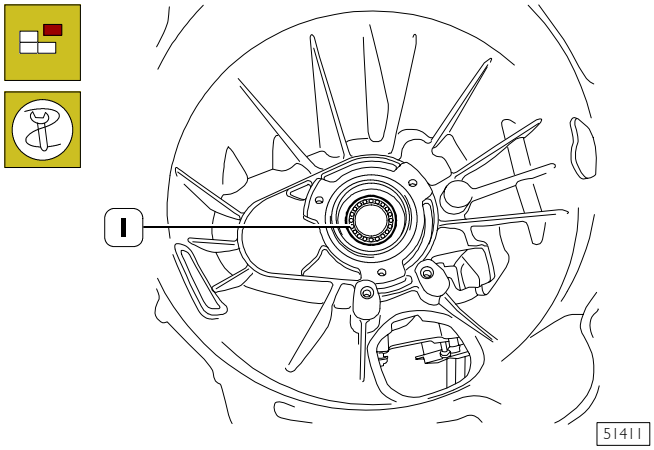

Turn over the transmission.

Using a suitable punch, remove the ball bearing (1).

Figure 43

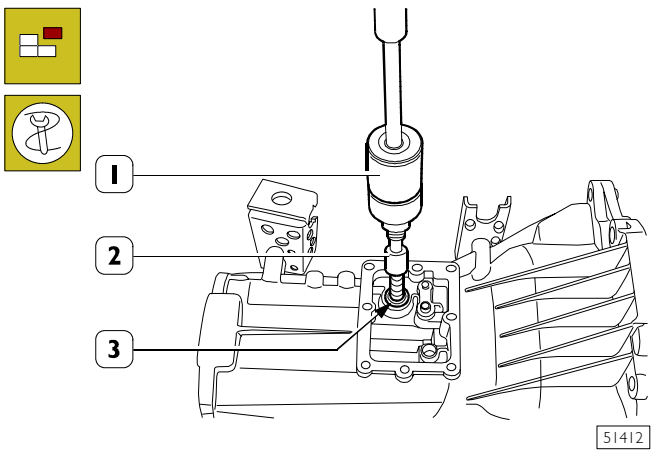

Using the percussion extractor 99340205 (1) and part 99348004 (2), extract the roller bearing (3).

Disassembling the main shaft

Mark the assembly position of each synchronizing device on the respective gears.

Figure 44

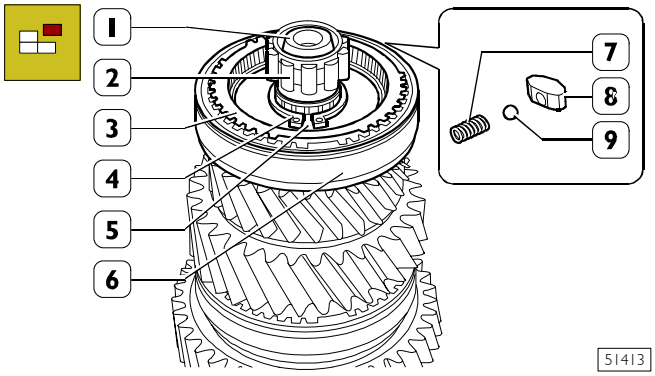

Clamp the main shaft (1) in a vice. Remove the roller bearing (2) and the synchronizer ring (3). Remove the sliding sleeve (6) for engaging 3rd-4th gear from the hub (5) and, taking care as the plugs (8) come out with their relative balls (9) and springs (7), recover them.

Figure 45

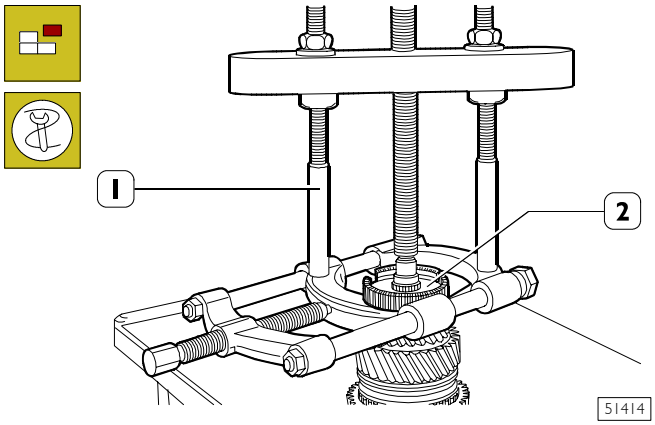

Remove the retaining ring (4, Figure 44). Extract the hub (2) with the extractor 99348001 (1).

Figure 46

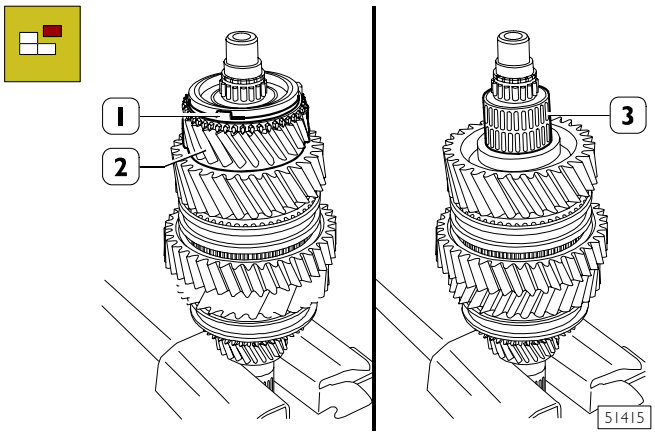

Remove the synchronizer ring (1), 3rd gear (2) and roller bearing (3).

Figure 47

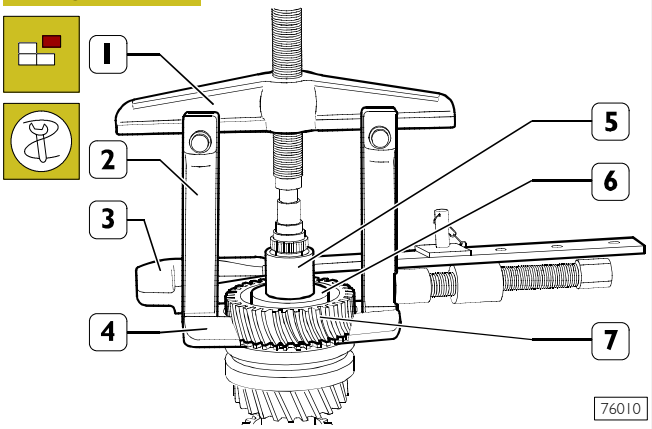

Using bridge 99341003 (1), screw stays 99341019 (2), grips 99341025 (4) and clamp 99341015 (3), take out the 2nd gear (7), spacer (6) and bushing (5).

Force of extraction of the bushing (4) 40 kN.

Figure 48

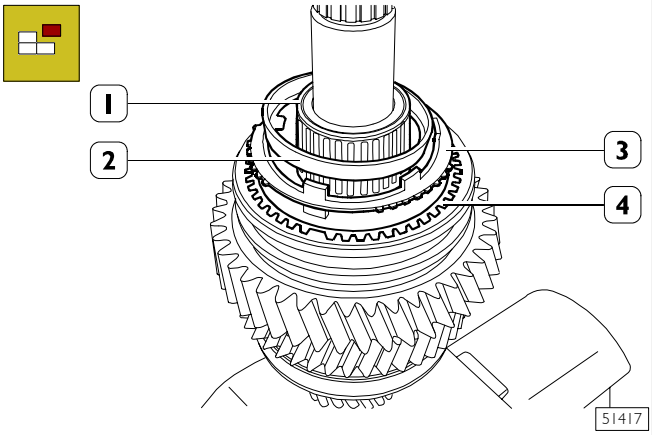

Take out the synchronizer ring (4), middle ring (3), ring (2) and roller bearing (1).

Figure 49

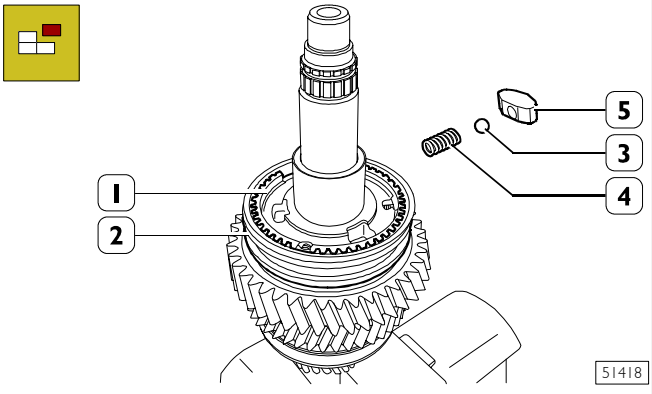

Remove the sleeve (2) for engaging 1st-2nd gear from the hub (1) and, taking care as the plugs (5) come out with their relative balls (3) and springs (4), recover them.

Figure 50

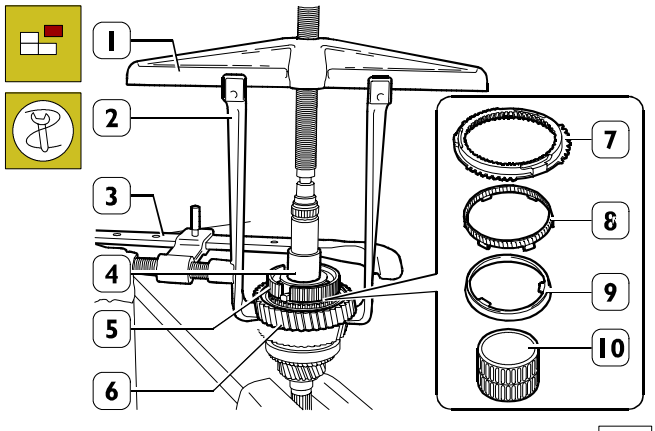

Using the bridge 99341003 (1), ties 99341012 (2) and clamp 99341015 (3), extract the 1st gear (6), with the synchronizer ring (7), middle ring (8) and ring (9), hub (5) and bushing (4). Remove the roller bearing (10).

Force of extraction of the bushing (4) 40 kN.

Figure 51

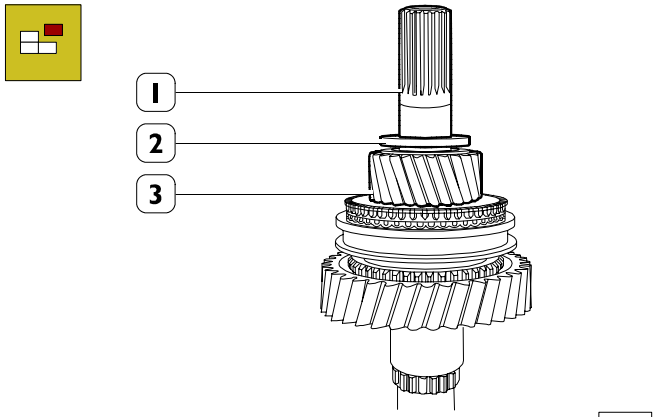

Turn over the main shaft (1). Take out the spacer ring (2) and remove the 5th gear (3).

Figure 52

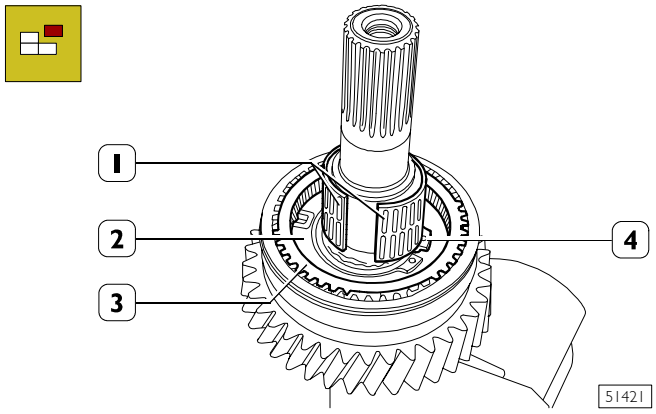

Remove the half roller bearings (1), the synchronizer ring (3) and the retaining ring (4) holding the hub (2).

Figure 53

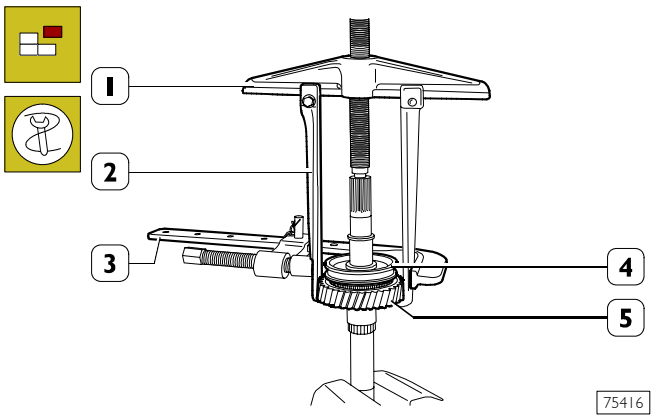

Using the bridge 99341003 (1), ties 99341012 (2) and clamp 99341015 (3), extract the reverse gear (5) and the synchronizer assembly (4).

Figure 54

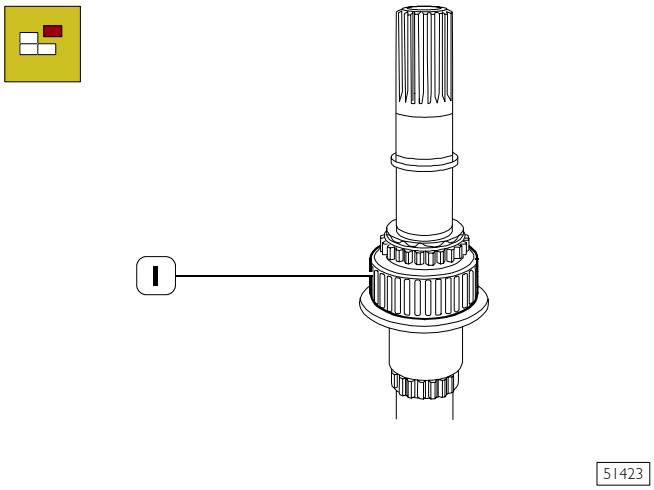

Remove the roller bearing (1).

Figure 55

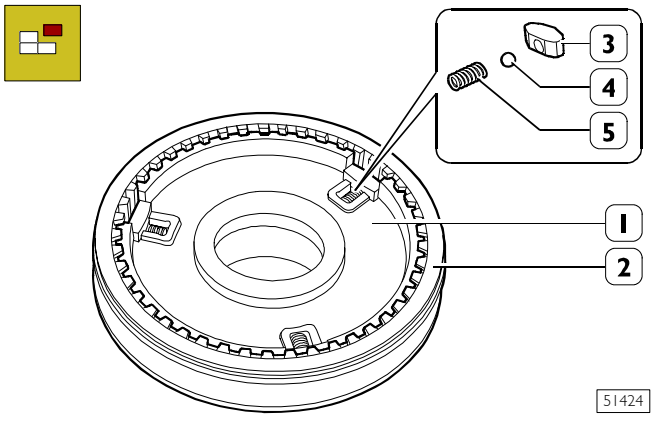

Remove the sliding sleeve (2) for engaging reverse - 5th gear from the hub (1), taking care as the plugs (3) come out with their relative balls (4) and springs (5), recover them.

Figure 56

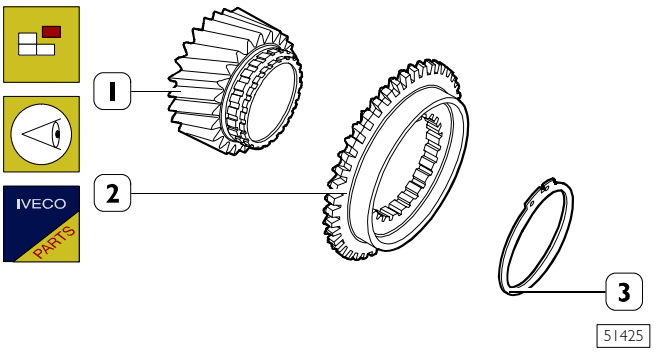

If the cog-wheel (2) of the 5th gear (1) shows any sign of damage, take out the retaining ring (3), replace the cog-wheel (2) and refit the retaining ring (3).

Drive input shaft

Figure 57

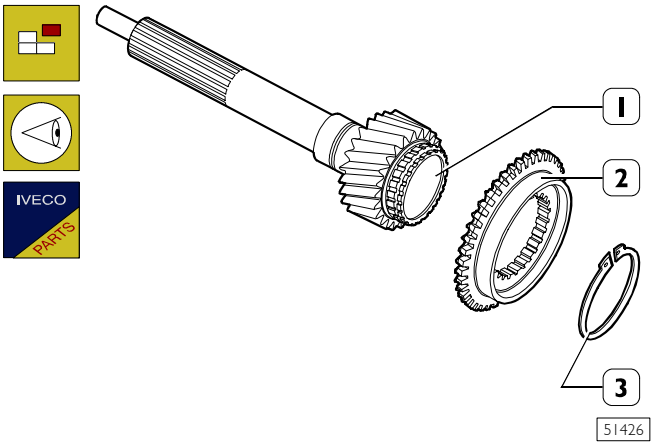

If the cog-wheel (2) of the input shaft gear (1) shows any sign of damage, take out the retaining ring (3), replace the cog-wheel (2) and refit the retaining ring (3).

Disassembling the transmission shaft

Figure 58

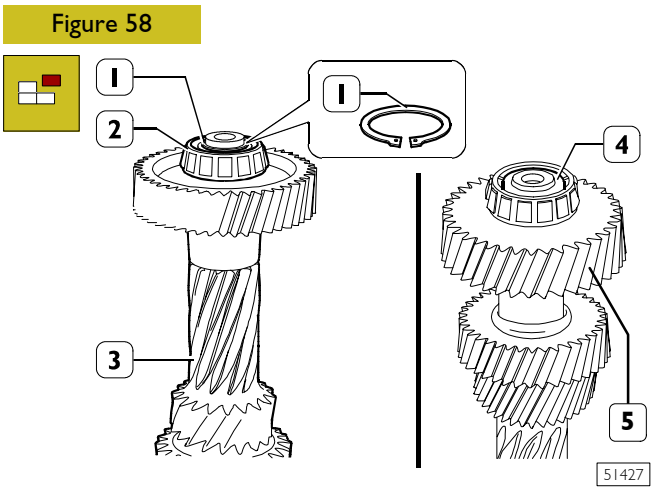

Take out the retaining ring (1) and extract the internal ring (2) of the rear bearing. Turn over the shaft (3) and extract the internal ring (4) of the front bearing.
Shaft (3) gear (5) removal, if required, shall be performed by hydraulic press; 50 kN removing load.

Figure 59

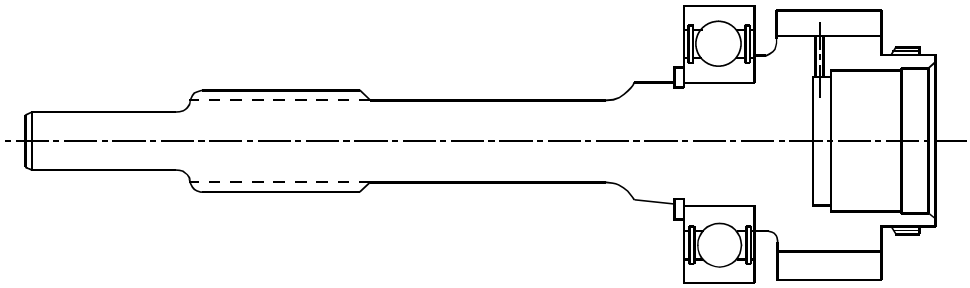

INPUT SHAFT ASSEMBLY DRAWING

Figure 60

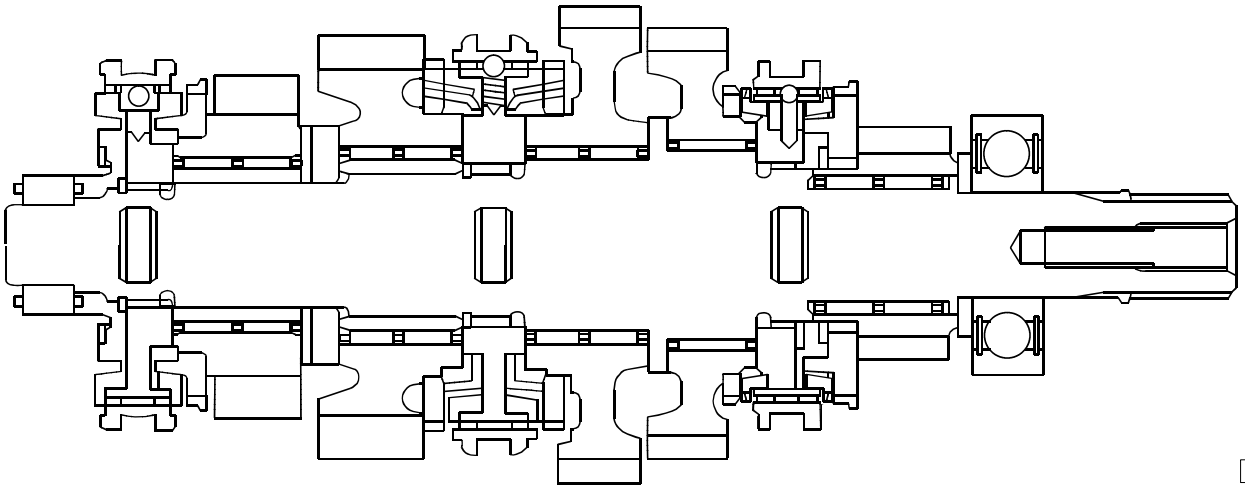

MAIN SHAFT ASSEMBLY DRAWING

Figure 61

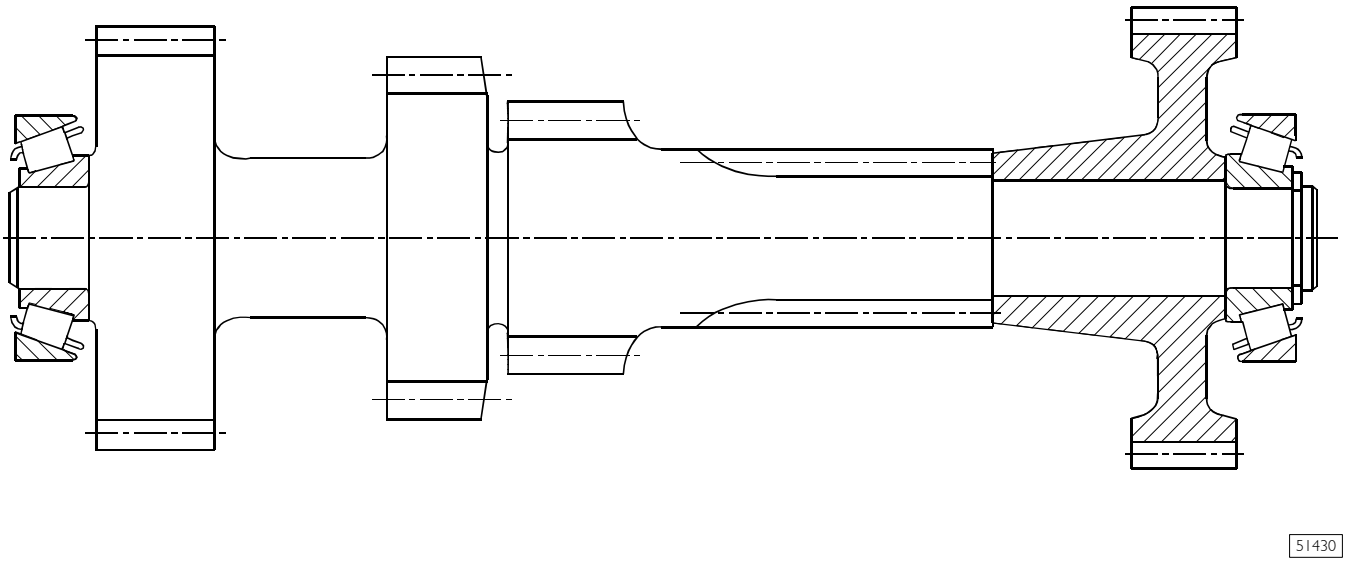

TRANSMISSION SHAFT ASSEMBLY DRAWING

Figure 62

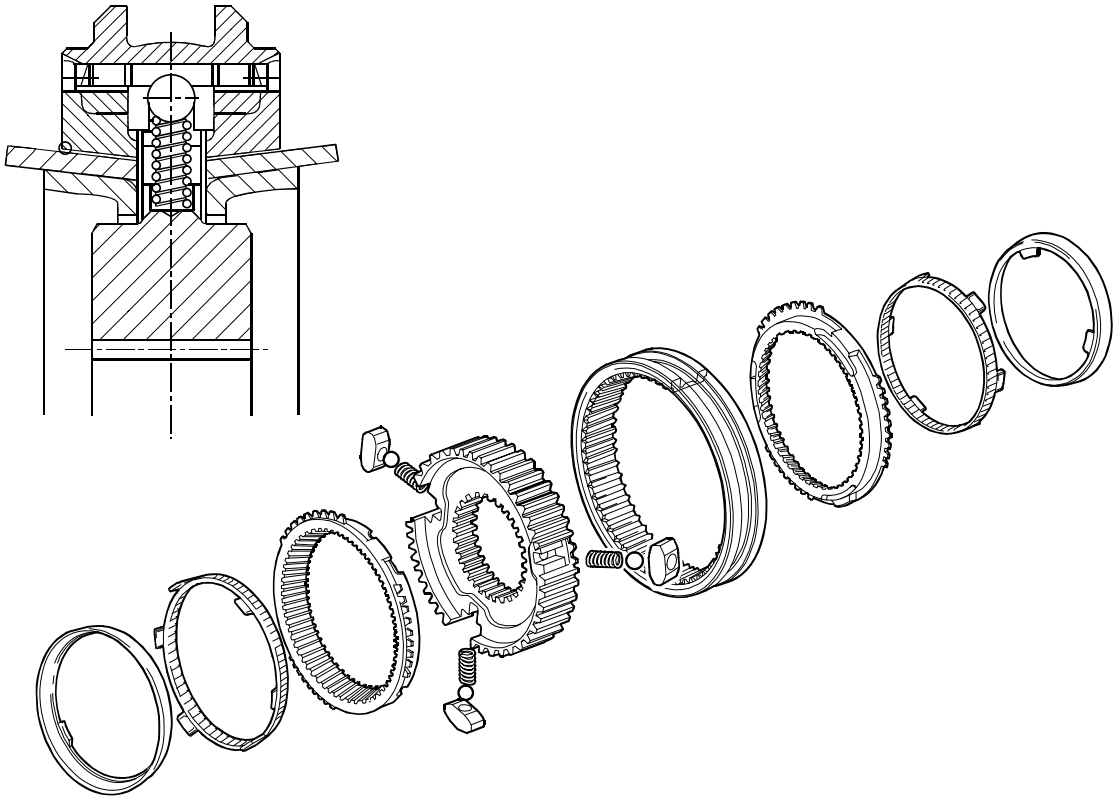

1st-2nd GEAR DUAL CONE SYNCHRONIZER ASSEMBLY

Figure 63

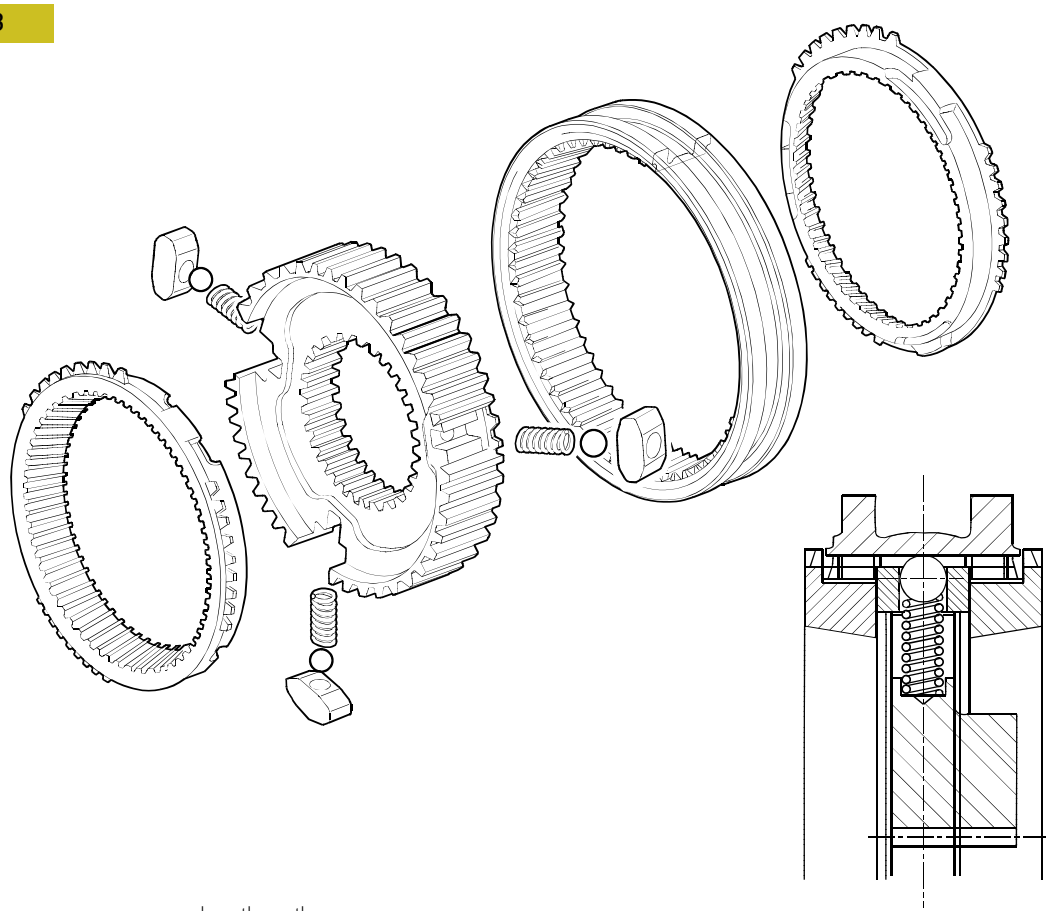

3rd - 4th - 5th GEAR SINGLE CONE SYNCHRONIZER ASSEMBLY

CHECKS

Transmission

The transmission and relative covers must show no sign of cracking.
The mating surfaces of the covers and transmission must not be damaged or deformed. Remove any remains of sealant from them.

The seats of the bearings, reverse gear shaft and gear control rods must be neither damaged nor too worn.

Hubs - sliding sleeves - forks

The grooves on the hubs and relative sliding sleeves must not be damaged. The sliding sleeve must run freely on the hub. The plugs and balls for positioning the sliding sleeve must be neither damaged nor worn. The toothing of the sliding sleeves must not be damaged. The forks must be sound with an end float, in the radial groove of the sleeve, no greater than 1 mm.

Bearings

The roller bearings must be in perfect condition with no signs of wear or overheating. They must only be removed if they are to be replaced.

Shafts - gears

The seats on the shafts, for bearings, must be neither damaged nor worn. The toothing of the gears must be neither damaged nor worn.

Synchronizing devices

Check the wear on the synchronizer rings (3, Figure 64) proceeding as follows:

- ❑ position the synchronizer ring (3) on the respective cog-wheel (2, 7, 8, 9 and 11, Figure 64);
- ❑ turn the synchronizer ring so as to ensure correct coupling on the tapered surface of the cog-wheel of the gear.
- ❑ With a feeler gauge, check the distance **A** on two diametrically opposite points.
  If the average measured value **A** is less than 0.5 mm, replace the synchronizer ring.

After this check, the synchronizer rings must be marked on their respective gears to avoid swapping their positions over when assembling.

Figure 64

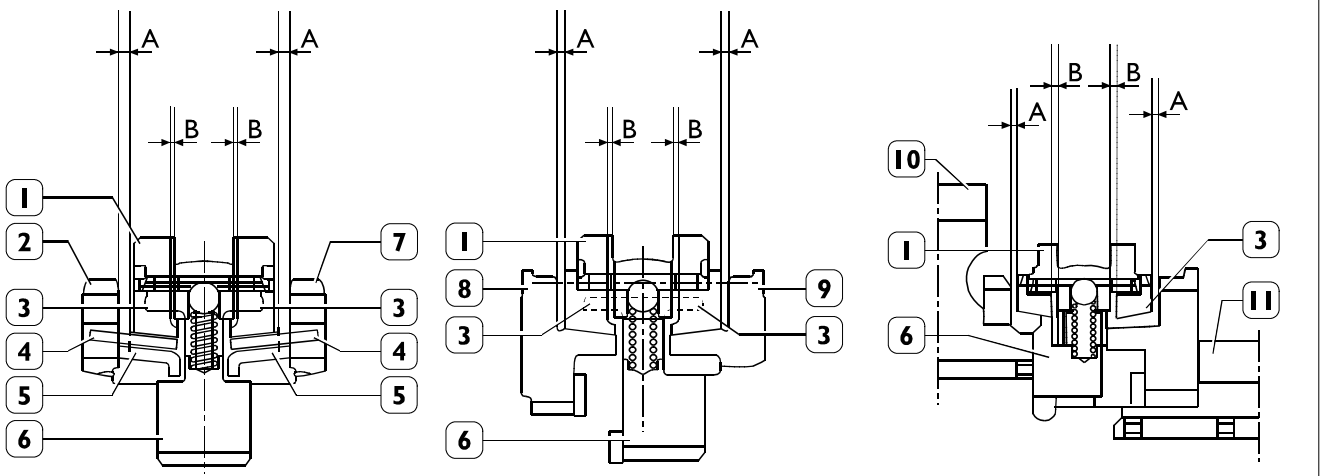

75415

1st - 2nd GEAR SYNCHRONIZERS

A. Synchronization reserve	
1st - 2nd gear	1.35 + 0.3 mm
B. 1st - 2nd gear release clearance	0.82 + 0.3 mm

3rd - 4th GEAR SYNCHRONIZERS

A. Synchronization reserve	
3rd - 4th gear	1.15 + 0.2 mm
B. 3rd - 4th gear release clearance	1.40 + 0.6 mm

5th GEAR SYNCHRONIZER - R.G.

A. Synchronization reserve	
5th gear - RG	1.15 + 0.2 mm
B. 5th gear release clearance - RG	1.10 + 0.4 mm

Force of sliding of sliding sleeves 80 ÷ 95 Nm.
Maximum admitted wear on the synchronizers, distance **A** - 0,5 mm

1. Sliding sleeve - 2. 1st gear cog-wheel - 3. Synchronizer ring - 4. Middle ring - 5. Ring - 6. Hub - 7. 2nd gear cog-wheel - 8. 3rd gear cog-wheel - 9. 4th gear cog-wheel - 10. Reverse gear - 11. 5th gear cog-wheel

Mounting the transmission shaft

Figure 65

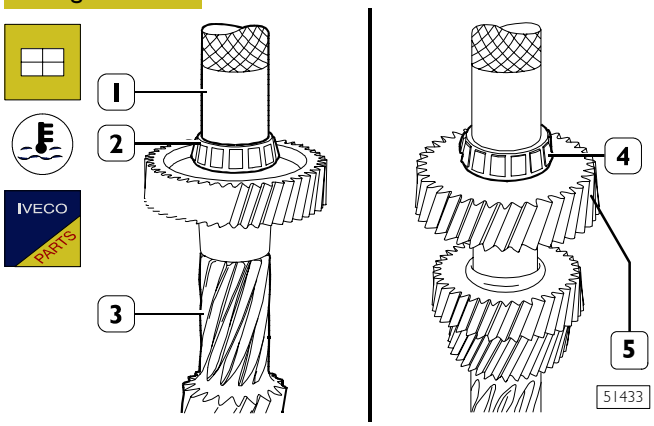

Gear (5) fitting on shaft (3), if required, shall be performed by hydraulic press after heating the gear to 140°C ÷ 170°C; 31 kN driving load.
Heat the internal rings (2 and 4) of the tapered roller bearings to a temperature of approx. 80°C and, with a suitable punch (1), mount them on the transmission shaft (3).

Figure 66

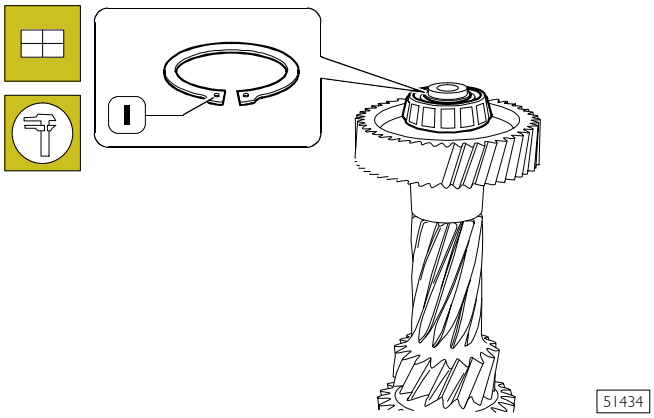

Mount the retaining ring (1) whose thickness gives an end float when in its seat of 0 ÷ 0.05 mm.

Mounting the main shaft

Mount the synchronizer rings on their respective gears according to the marks made during disassembly or when checking in the case of replacement.

Figure 67

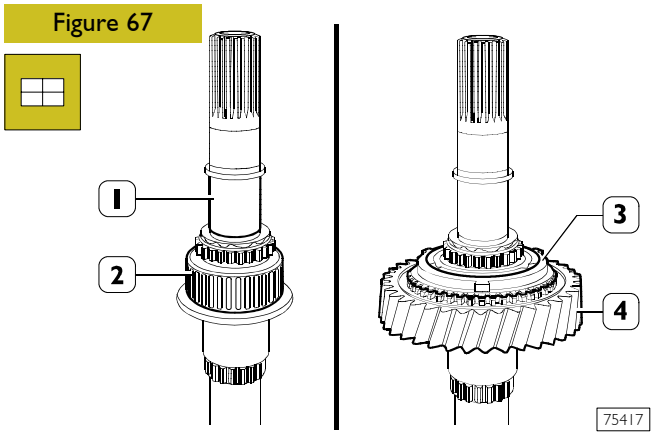

Tighten the main shaft (1) in a vice and mount on it: the roller cage (2), reverse gear (4) and synchronizer ring (3).

Figure 68

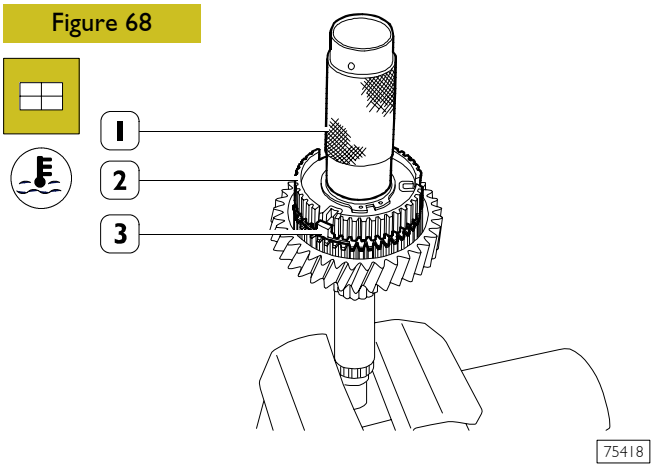

Heat the hub (2) for the 5th - reverse gear engagement sliding sleeve to a temperature no higher than 150°C and mount it on the main shaft with a suitable punch (1).

When fitting, make sure that the projecting parts (3) of the synchronizer ring get positioned in the hub (2) correctly.

Figure 69

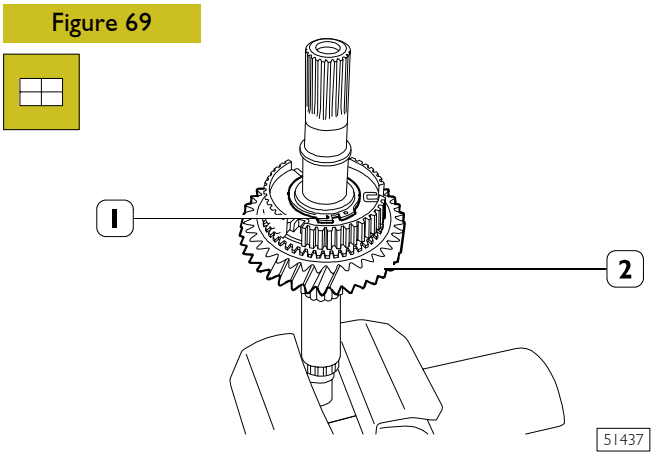

Mount the retaining ring (1) whose thickness makes for null clearance in its seat.
Check the end float of the reverse gear (2). It should be 0.15 ÷ 0.3 mm.

Figure 70

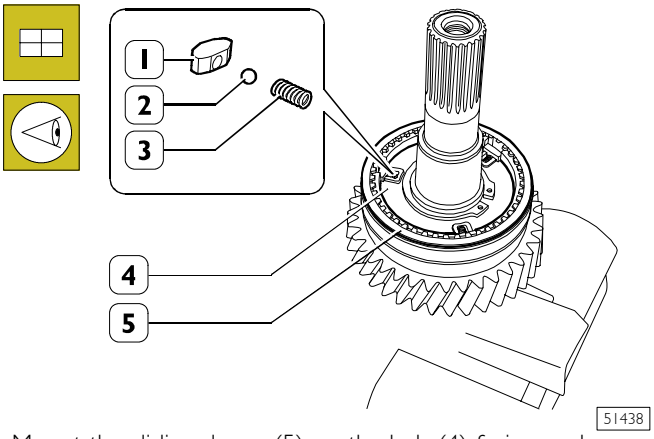

Mount the sliding sleeve (5) on the hub (4) facing as shown in the figure.
Put the springs (3), plugs (1) and balls (2) into the seats of the hub (4), settling them under the sliding sleeve.

Figure 71

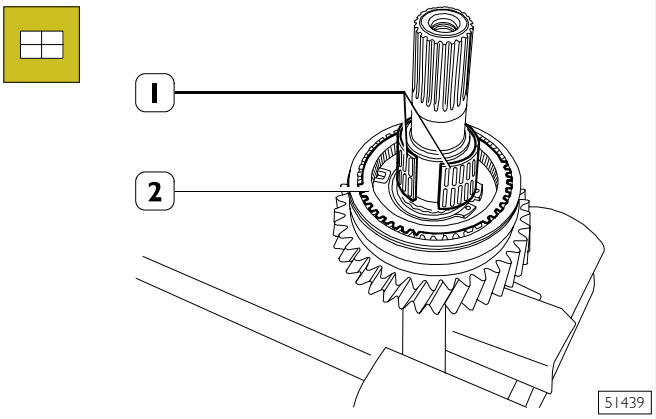

Positioning the synchronizer ring (2) and the half roller bearings (1).

Figure 72

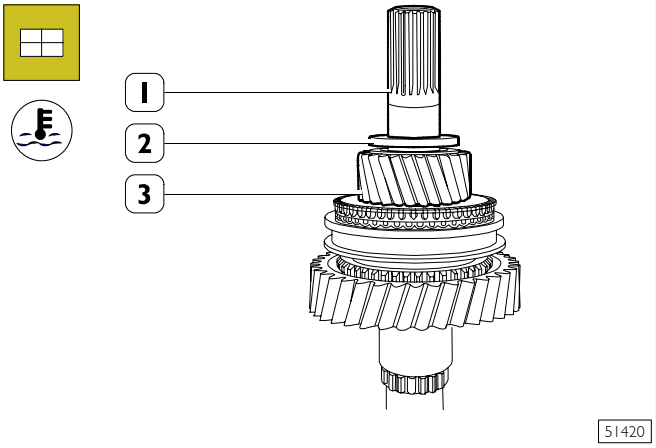

Install the 5th speed gear (3).
Heat spacer ring (2) to 90°C and install it.
Upset the main shaft (1).

Figure 73

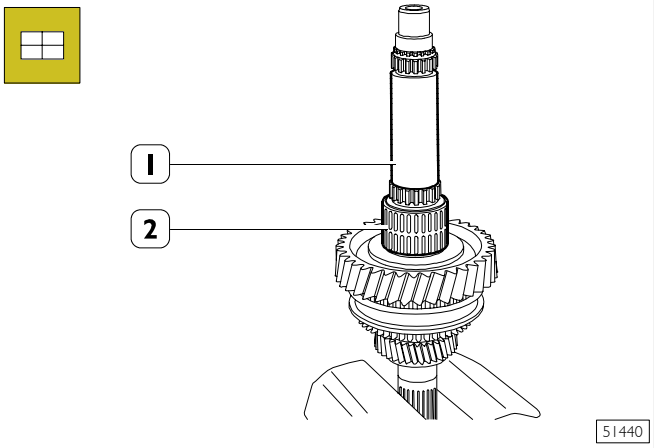

Position the roller bearing (2) on the main shaft (1).

Figure 74

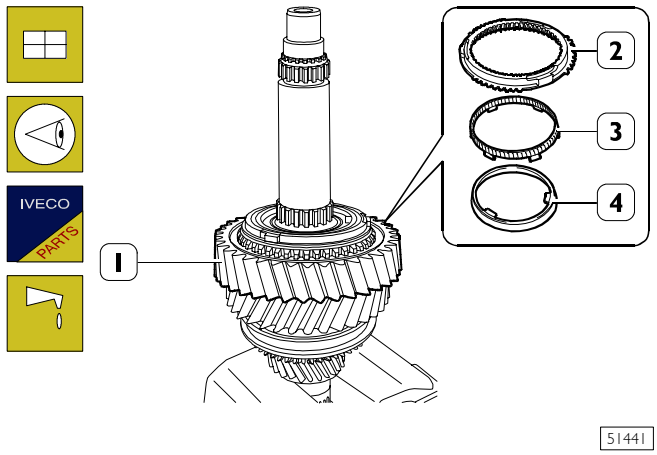

Mount the 1st gear (1).
Lubricate the ring (4), middle ring (3), synchronizer ring (2) with TUTELA MR3 grease and mount them on the gear (1).

Make sure the tongues of the rings (2 and 3) are positioned correctly in their respective seats.

Figure 75

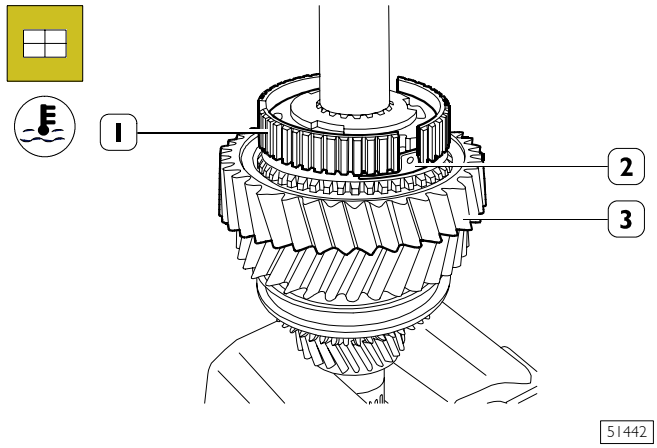

Heat the hub (1) for the 1st - 2nd gear sliding sleeve to a temperature no higher than 150°C and mount it on the main shaft with a suitable punch.

When assembling, make sure the tongues of the rings (3 and 4, Figure 74) and the projections of the synchronizer ring (2) are positioned correctly in the hub (1). Check that the end float of the 1st gear (3) is 0.15 ÷ 0.30 mm.

Figure 76

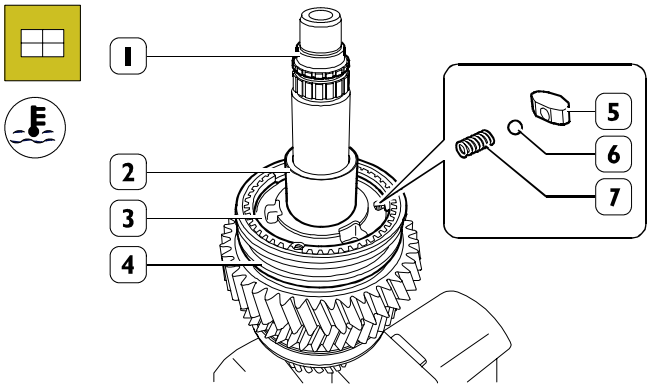

51443

Heat the bushing (2) to a temperature no higher than 170°C and mount it on the main shaft (1).

Mount the sliding sleeve (4) on the hub (3).

Put (3) the springs (7), plugs (5) and balls (6) into the seats in the hub, settling them under the sliding sleeve (4).

Figure 77

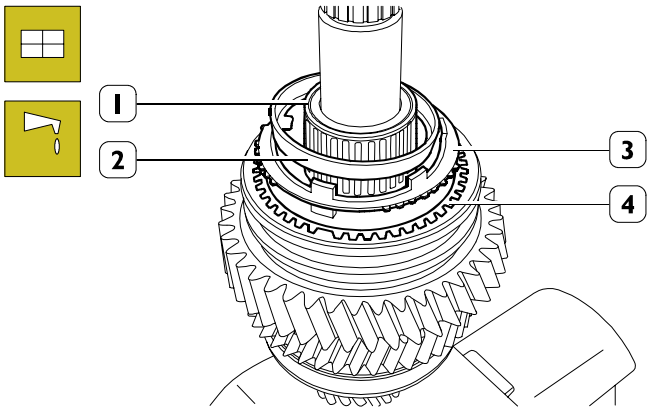

51417

Lubricate the synchronizer ring (4), middle ring (3) and the ring (2) with TUTELA MR3 grease.

Make sure the tongues of the rings (2 - 3) and the projections of the synchronizer ring (4) are positioned correctly in their respective seats.

Mount the roller bearing (1).

Figure 78

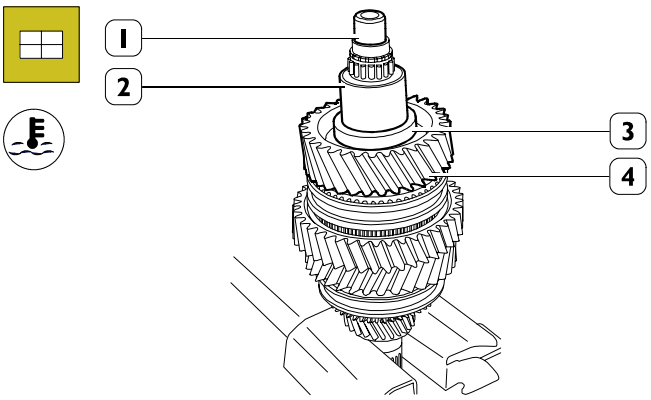

51445

Mount the 2nd gear (4).

Heat the spacer (3) to a temperature no higher than 170°C and mount it on the main shaft (1).

Check the end float of the 2nd gear (4). It should be 0.15 ÷ 0.30 mm.

Heat the bushing (2) to a temperature no higher than 170°C and mount it on the main shaft (1).

Figure 79

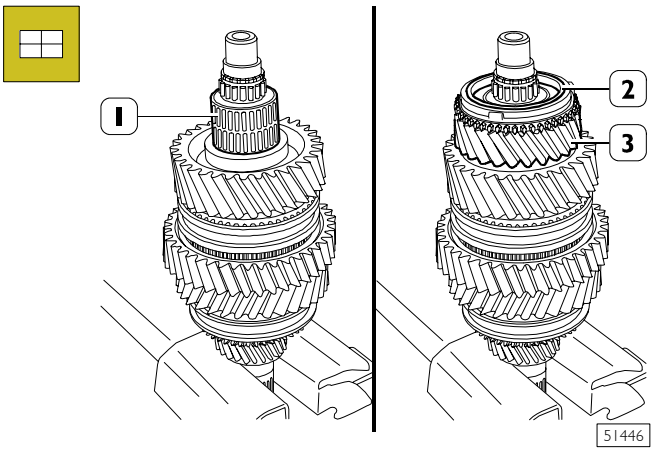

51446

Mount the roller bearing (1) and the 3rd gear (3). Position the synchronizer ring (2) on the 3rd gear (3).

Figure 80

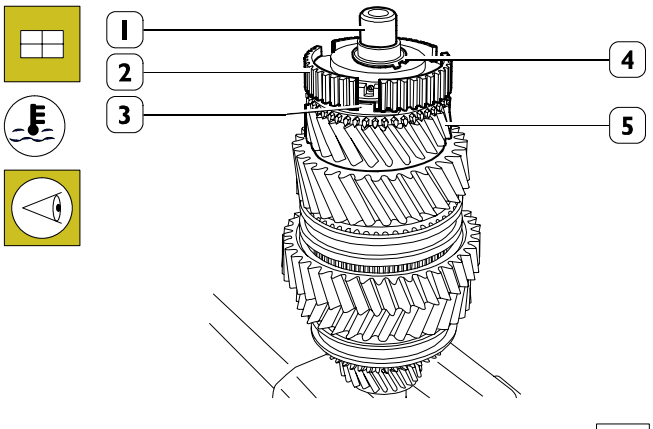

51447

Heat the hub (2) to a temperature no higher than 150°C and mount it on the main shaft (1) checking that the projections (3) of the synchronizer ring are positioned in the compartments of the hub (2).

Mount the retainer ring (4) whose thickness determines an end float in its seat of 0 ÷ 0.05 mm.

Check the end float of the 3rd gear (5). It should be 0.15 ÷ 0.30 mm.

Figure 81

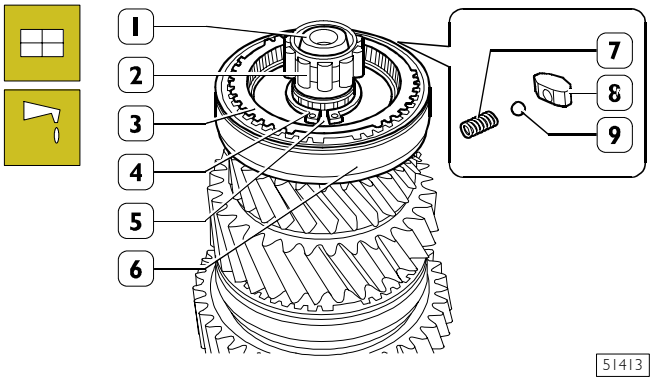

51413

Mount the sliding sleeve (6) on the hub (5). Put the springs (7), plugs (8) and balls (9) into the seats in the hub (5), settling them under the sliding sleeve (6).

Grease the roller bearing (2) and fit it on the main shaft (1).

Position the synchronizer bearing (3) on the hub (5).

Rods - forks - selector - driver Disassembly - assembly

Figure 82

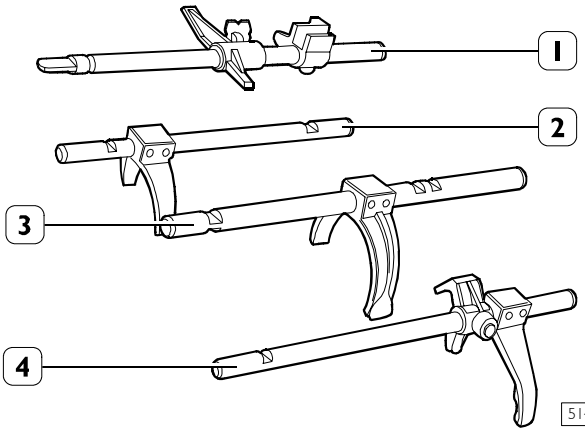

51449

To replace the forks of the selector and driver from their respective control rods it is sufficient to remove the retaining spring pins with a suitable punch.

For assembly, carry out these steps in reverse order, replacing the spring pins.

Mounting the transmission

During assembly, the gaskets, retaining rings, O-rings, spring pins, safety plates and springs must always be replaced with new parts.

The nuts and screws must be tightened to the required torque unless specified otherwise, with the thread dry and greased.

Adjusting the transmission shaft bearing end float

Figure 83

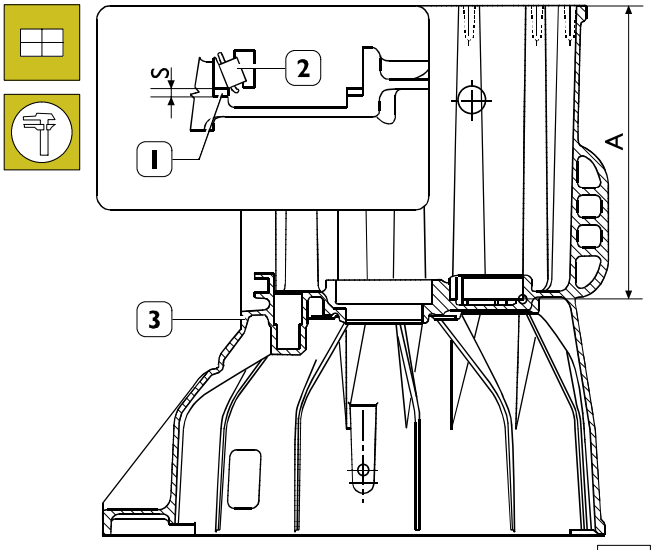

51450

Determine the thickness **S** of the ring (1) for adjusting the transmission shaft bearing (2) end float, proceeding as follows:

- measure the distance **A** between the end of the transmission (3) and the seat of the ring of the front bearing (2);

Figure 84

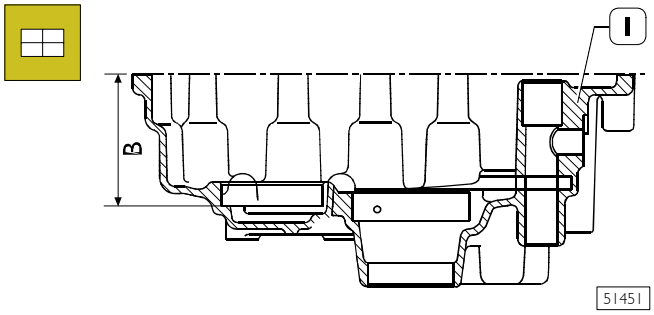

❑ measure the distance **B** between the end of the rear cover (1) and the seat of the ring of the rear bearing;

Figure 85

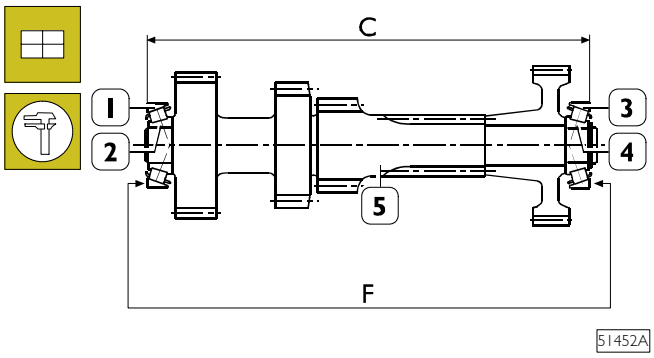

❑ mount the internal rings (2 - 4) of the tapered roller bearings on the transmission shaft (5);

❑ position the external rings (1 - 3) on the internal ones (2 - 4);

❑ apply a load **F** of 100 ÷120 N on the external rings (1 - 3).

❑ In these conditions, measure the distance **C** between the ends of the rings (1 - 3).

❑ The thickness **S** of the bearing end float adjustment ring is given by:

$$S = A + B - C - 0,10$$

Where:

A - B - C are the measured values

0.10 = constant value, including the deformation of the external rings (1 - 3) after driving them into their seats and the end float of the bearings of 0.05 mm.

Figure 86

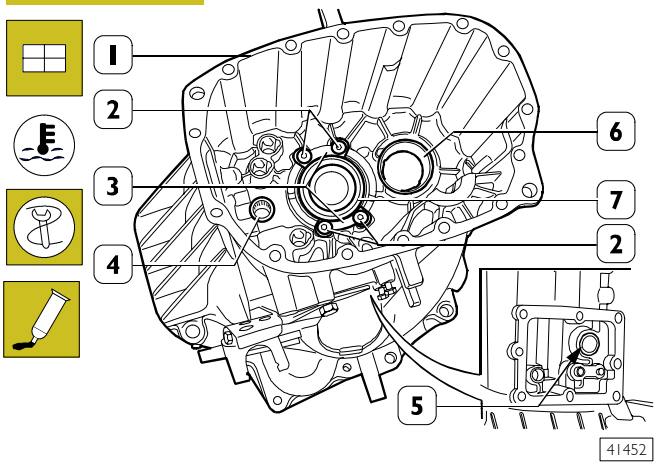

Position the adjustment ring (1, Figure 83) of the thickness determined with the above measurement in the transmission (1).

Heat the bearing seats of the box (1) to a temperature of approx. 80°C and mount:

❑ the external ring (6) of the front tapered roller bearing with punch 99374091 and grip 99370007;

❑ the ball bearing (7) with a general punch;

❑ the bushing with ball bearing (4) and the roller bearing (5) with a general punch.

Position the retaining plates (3) and secure them to the box, tightening the screws (2) to the required torque.

Apply LOCTITE 242 onto the thread of the screws (2, Figure 86 and 5, Figure 87).

Figure 87

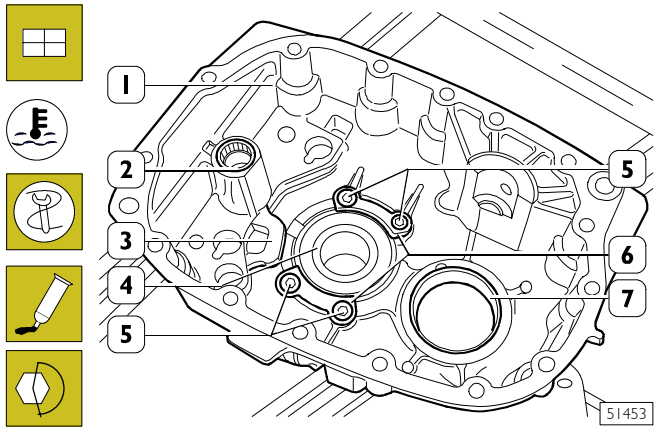

Heat the bearing seats of the box (1) to a temperature of approx. 80°C and mount:

❑ the external ring (7) of the tapered roller bearing with punch 99374091 and grip 99370007;

❑ the ball bearing (4) and the bushing with ball bearings (2) with a general punch.

Position the retaining plates (6) and the engagement locking plate (3) in their seats.

Secure these to the box, tightening the screws (5) to the required torque.

Figure 88

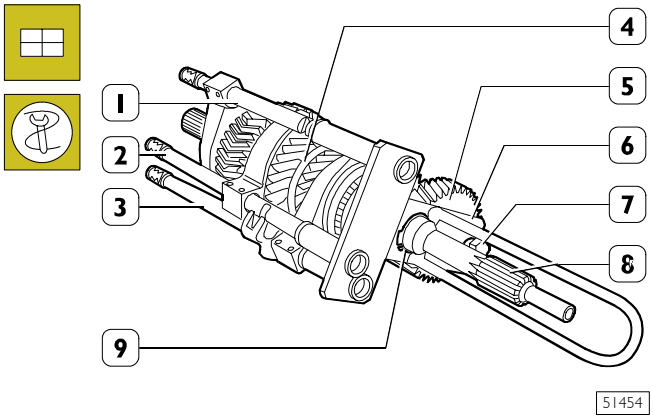

Clamp the main shaft in a vice.

Mount the input shaft (8) on the main shaft (4) and couple this with the transmission shaft (5).

Fit tool 99360521 (6) on shafts (8 and 5) and tie it to input shaft (8) by circlip (9) and to secondary shaft (5) by screw (7).

Set forks and rods thereof (1 - 2 - 3) on sliding sleeves and tie by tool 99360521 sleeves (6).

Figure 89

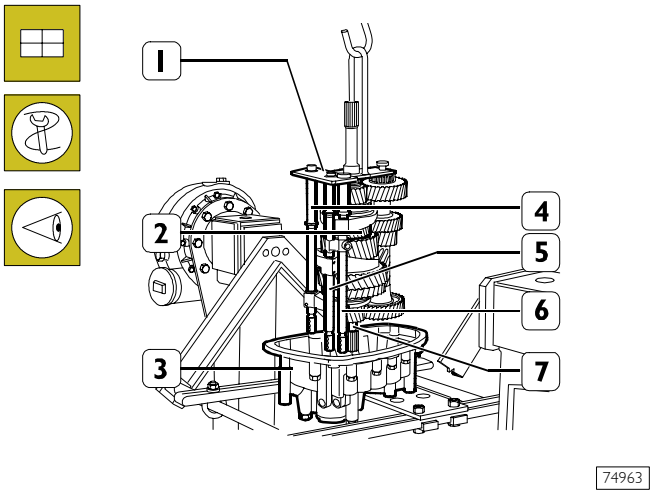

Hook the hoist onto tool 99360521 (1). Lift the assembly (2) as put together beforehand and mount it in the rear cover (3).

During this operation, check that the output shaft (7) goes into the supporting ball bearing and the control rods (4 - 5 - 6) go into their respective seats.

Figure 90

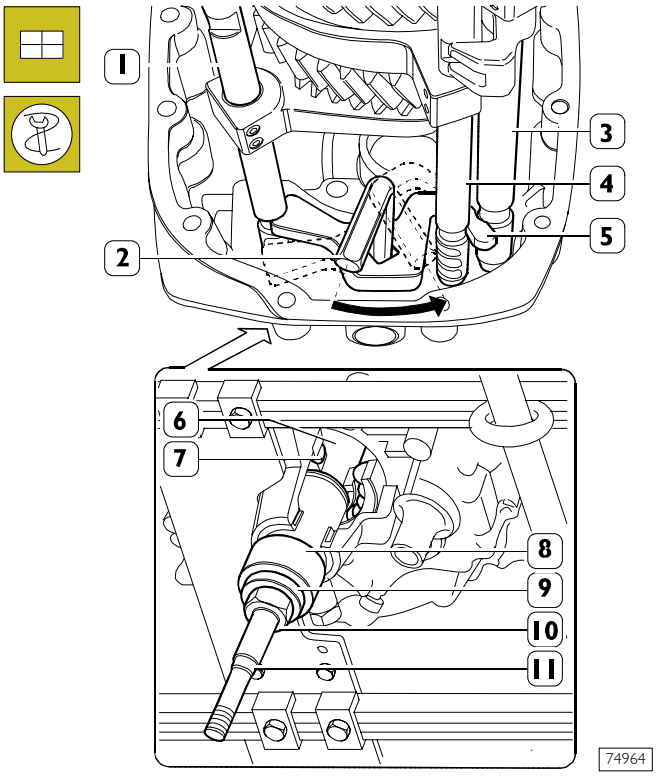

Set properly clutch locking plate (5) by setscrew wrench (2) to avoid control rods (1 - 3 - 4) interference with plate during next operation.

Screw the pin (11) of tool 99370234 into the hole in the output shaft (6). Mount the bushing (8) and spacer (9) on the tool 99370234.

Screw on the nut (10) and at the same time lower the hoist so the output shaft (6) is positioned on the ball bearing (7).

Remove the tool 99360521 and the parts (8 - 9 - 10 - 11) of the tool 99370234.

Figure 91

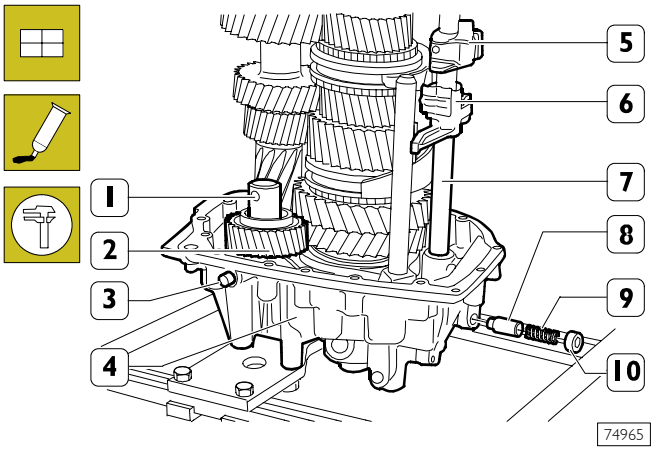

Mount the rod (7) complete with selector (5) and driver (6).

Put the pawls (8) and springs (9) into the rear cover (4).

Mount the cups (10).

Mount the reverse gear idler (2) with the shaft (1) and secure the shaft to the rear cover (4) tightening the screw (3) to the required torque.

Apply LOCTITE 5206 sealant to the mating surfaces of the transmission.

Figure 92

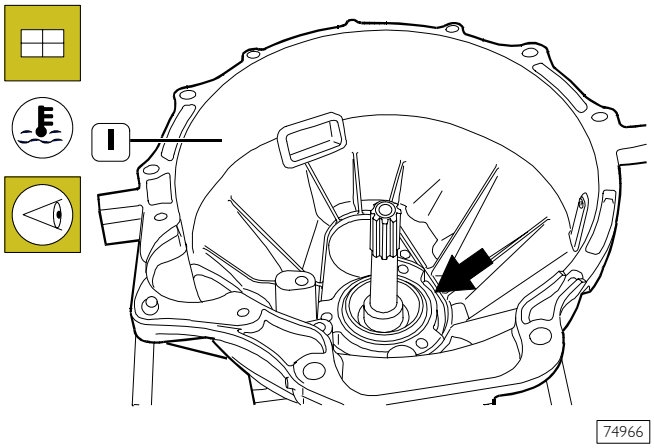

Heat the transmission (1) by the seat (⇒) of the ball bearing and mount it on the rear cover, checking that the shafts and control rods are positioned correctly in their respective seats.

Figure 93

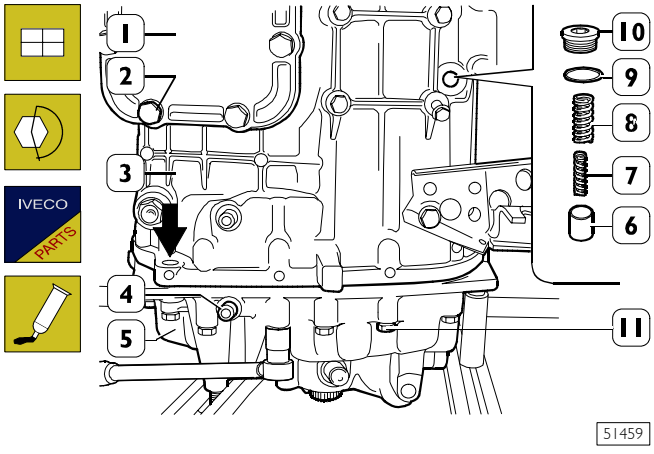

Insert the centring pins (⇒) in the rear cover (5).

Screw on the screws (11) fixing the rear cover (5) to the transmission (3) and tighten them to the required torque.

Tighten the screw (4) fixing the reverse gear idler shaft to the transmission (3) to the required torque.

Insert the push rod (6) and springs (7 - 8) and tighten the plug (10) with a new gasket (9) to the required torque.

If the side cover (1) has been removed, apply LOCTITE 5206 sealant on the mating surface and tighten the screws (2) to the required tightening torque.

Figure 94

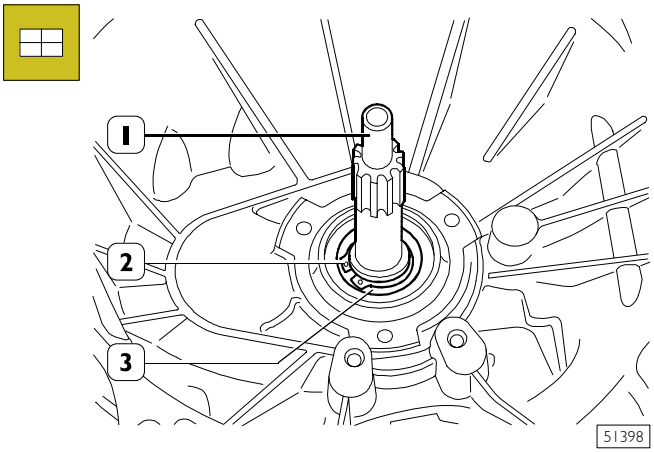

Mount the front bearing (3) retaining ring (2) on the input shaft (1).

Figure 95

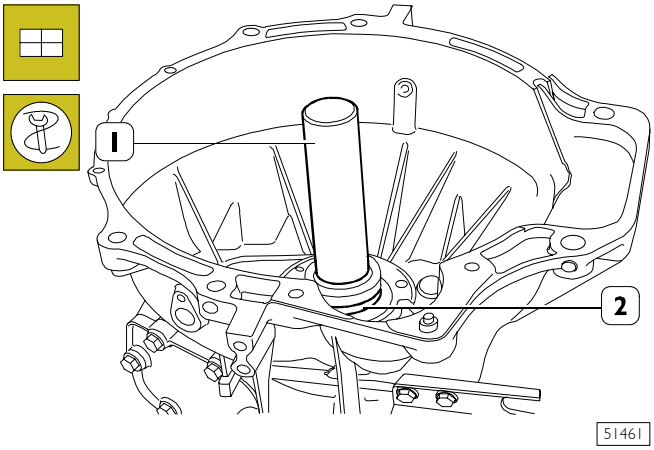

Mount the O-ring (2) with the key 99374453 (1).

Figure 96

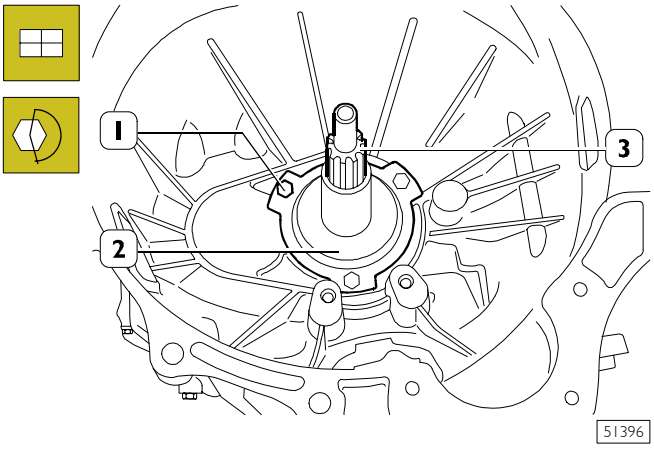

Mount input shaft (3) protection cover (2) and tighten screws (1) to the required torque.

Figure 97

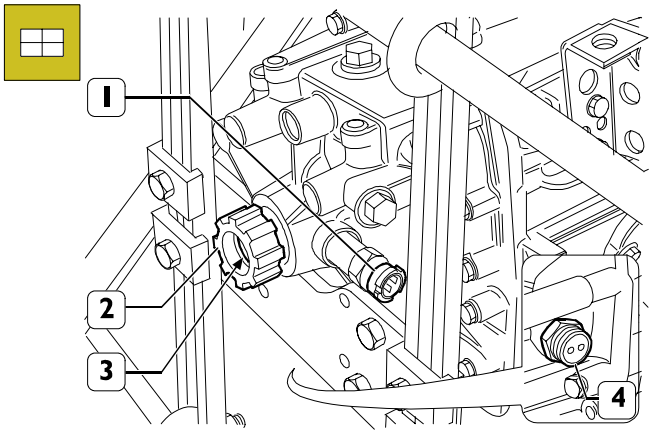

Mount the phonic wheel (2) onto the main shaft (3).

Mount the reversing light switch (4) and the tachograph sensor (1).

Figure 98

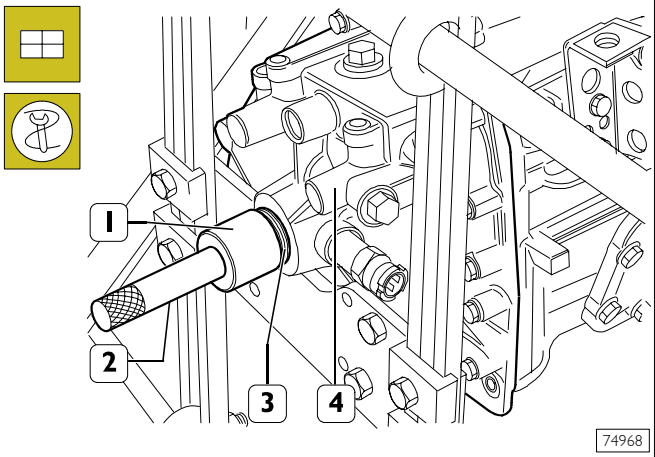

Mount the O-ring (3) in the rear cover (4) with the key 99374452 (1) and the grip 99370007 (2).

Figure 99

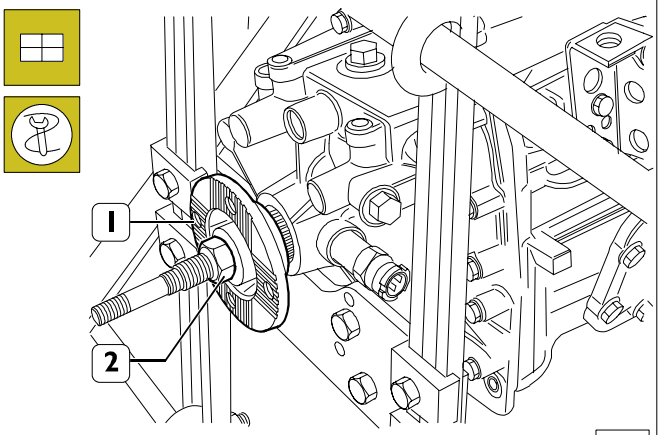

Mount the output flange (1) on the main shaft with the tool 99370234 (2).

Remove the tool 99370234 (2).

Figure 100

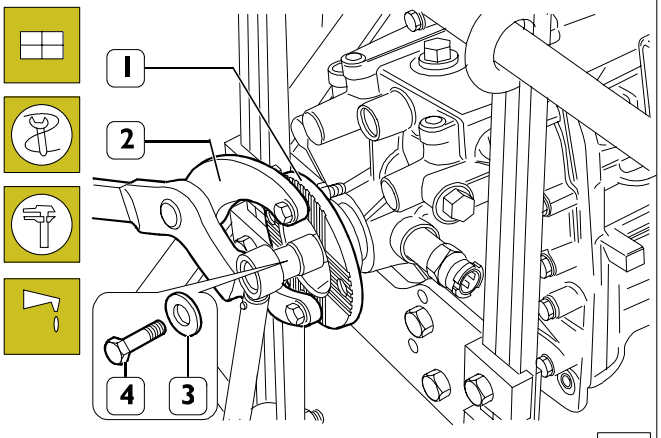

Mount the washer (3) and screw on the screw (4).

Lock the rotation of the flange (1) with the lever 99370317 (2) and tighten the screw (4) to the required torque.

Mount the control box as described under the relevant heading.

Fill the transmission with lubricating oil in the required quantity and grade.

6 S 300 Transmission

	Page
GENERAL	45
GEAR SELECTION AND ENGAGEMENT	45/1
SPECIFICATIONS AND DATA	46
TIGHTENING TORQUES	48
TOOLS	49
OVERHAULING THE TRANSMISSION	53
❑ Gear control box	53
❑ Disassembly	53
❑ Assembly	53
❑ Disassembling the transmission	55
❑ Disassembling the rear cover bearings	58
❑ Disassembling the transmission bearings	58
❑ Disassembling the main shaft	59
❑ Disassembling the drive input shaft	60
❑ Disassembling the transmission shaft	60
CHECKS	65
❑ Transmission	65
❑ Hubs - sliding sleeves - forks	65
❑ Bearings	65
❑ Shafts - gears	65
❑ Synchronizing devices	65
❑ Mounting the transmission shaft	67
❑ Mounting the main shaft	68
❑ Rods - forks - selector - driver	71
❑ Disassembly - assembly	71
❑ Mounting the transmission	71
❑ Adjusting the transmission shaft bearing end float	71

GENERAL

The 6 S 300 transmission is mechanical with synchronized engagement of forward gears.

It is composed of a light alloy box (which also serves as a clutch cover), a rear cover (where the speed engagement controls and gearing are housed) and a control box.

There is an opening on the side of the transmission to apply a power take-off.

Drive transmission is accomplished by a set of helical-toothed constant mesh gears, for both forward and reverse gears.

The splined or machined gears are on four shafts: input, main, transmission and reverse gear.

The input and main shafts are supported, in the transmission, by watertight, non-adjustable ball bearings.

The transmission shaft is supported, in the transmission, by roller bearings that can be adjusted axially by means of ring shims.

6th, 5th, 4th, 3rd and reverse gears (new version transmissions) are synchronised by means of single taper free synchroniser rings; double taper wheels are used for 1st and 2nd gear.

Control inside the transmission is accomplished with five rods: a main rod to select and engage gears; four rods equipped with forks for engaging gears.

The outer engagement lever is provided with two counterpoised weights. They dampen the control (Bowden) wire engagement thrust and consequently attenuate noise.

Figure 1

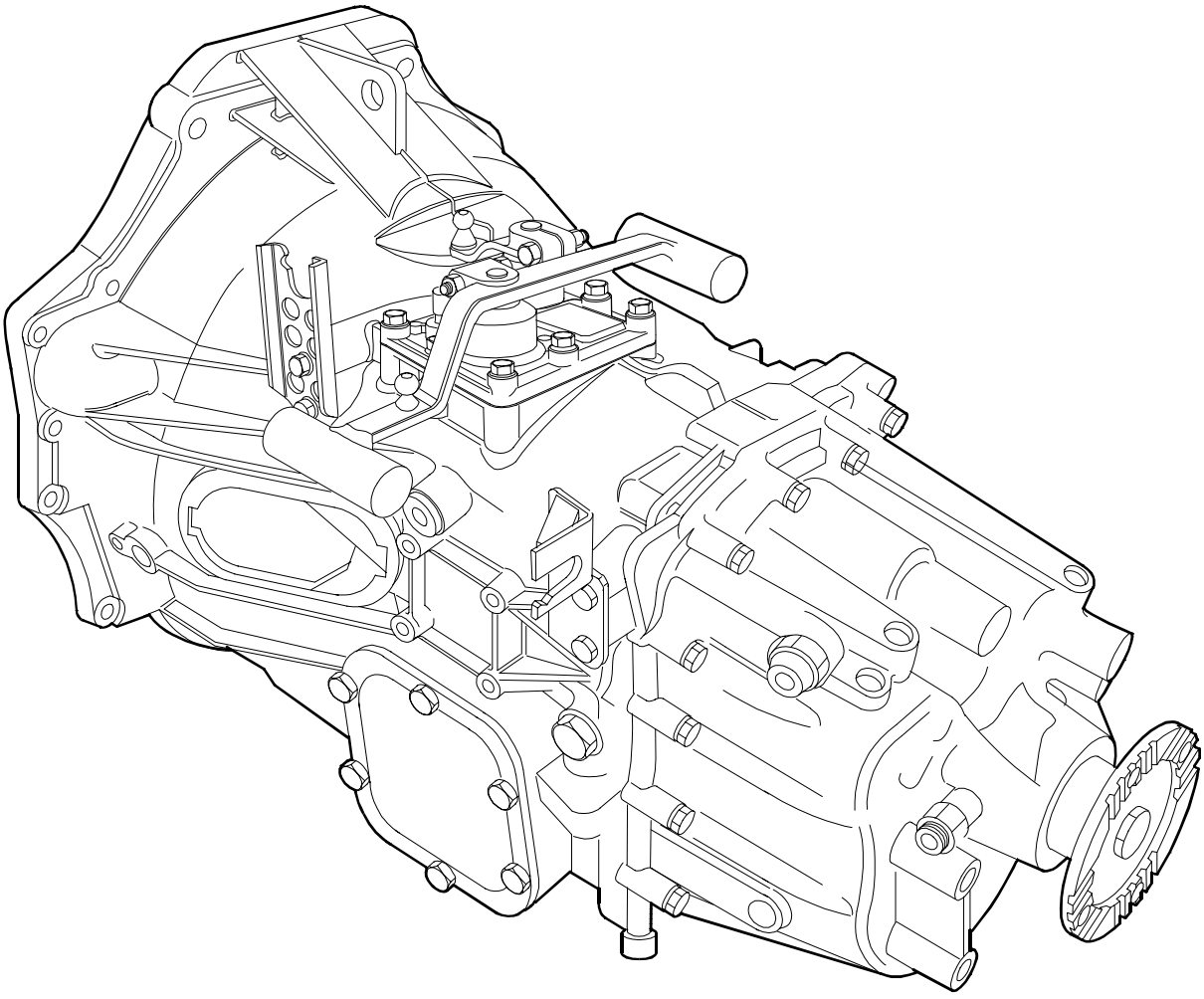

85939

GEAR SELECTION AND ENGAGEMENT

The combined action of the selector lever (2) and the engagement lever (1) cause the rotation and axial movement of the rod (4) in two subsequent steps to engage the required gear by means of the rods (8-7-6 and 9).

Neutral arrangement and/or 3rd/4th gear selection and engagement arrangement

Figure 1/1

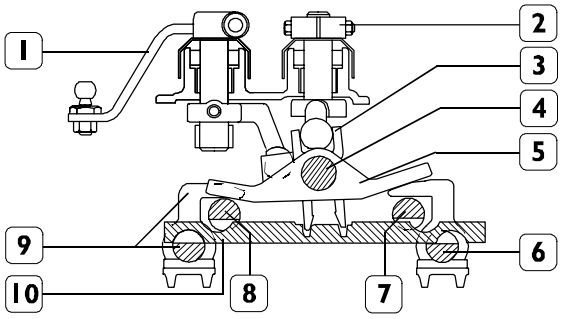

SECTION A-A

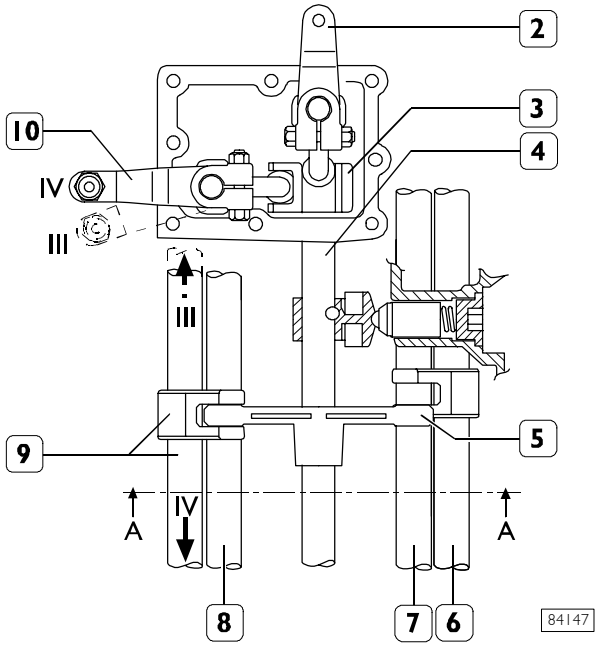

3rd/4th gear selection

According to the angular position of the selector lever (2), the slider (3) turns with the rod (4) (which is integral) and the selector (5) arranges the slider on the 3rd/4th gear rod (9). At the same time, the slider (3) moves the rod (10) to prevent the simultaneous engagement of two gears, to keep the 3rd and 4th gear engagement rod (9) free and to prevent movement of the other rods by engaging the grooves in the rods.

3rd/4th gear engagement

According to the movement of the engagement lever (1), the slider (3) axial moves the rod (4) (which is integral), the selector (5) (previously arranged) and consequently the chosen 3rd and 4th gear engagement rod (9).
Neutral position coincides with the 3rd/4th gear selection arrangement.
In this case, the vertical axis of the selector lever (2) is exactly at 90° with respect to the horizontal axis of the control corresponding to no angular variation of the rod (4).

1st/3rd gear selection election and engagement arrangement

Figure 1/2

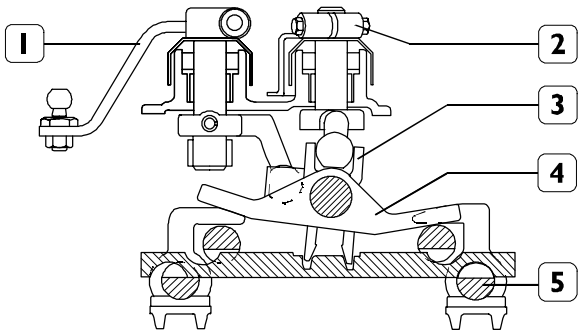

SECTION A-A

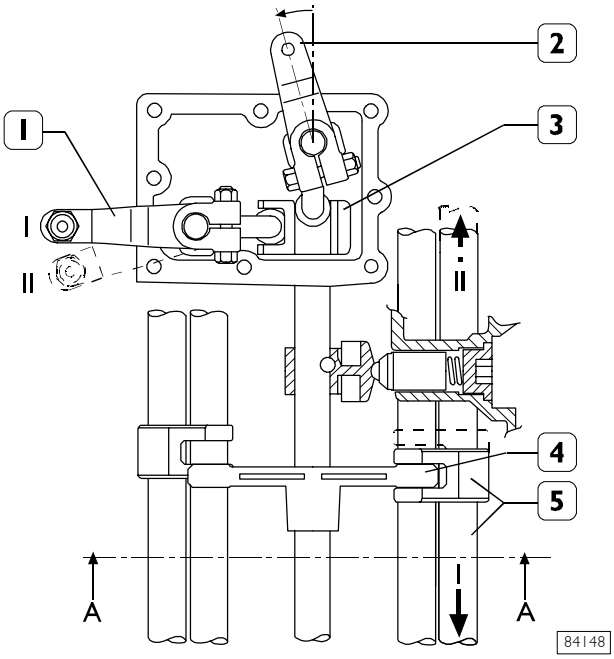

This arrangement is obtained by moving the selector lever (2) anticlockwise. In this way, the selector (4) is inserted in the 1st/2nd gear engagement rod (5).
By moving the lever (1), the slider (3) will axially move the 1st/2nd gear engagement rod (5).

5th/6th gear selection and engagement arrangement

Figure 1/3

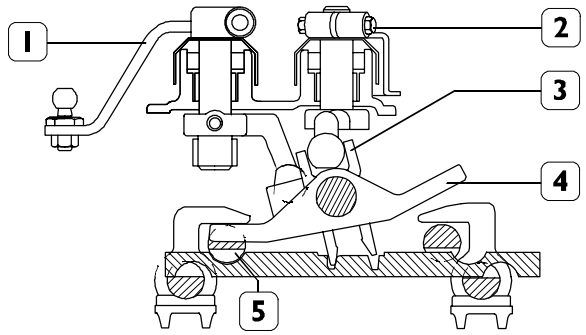

SECTION A-A

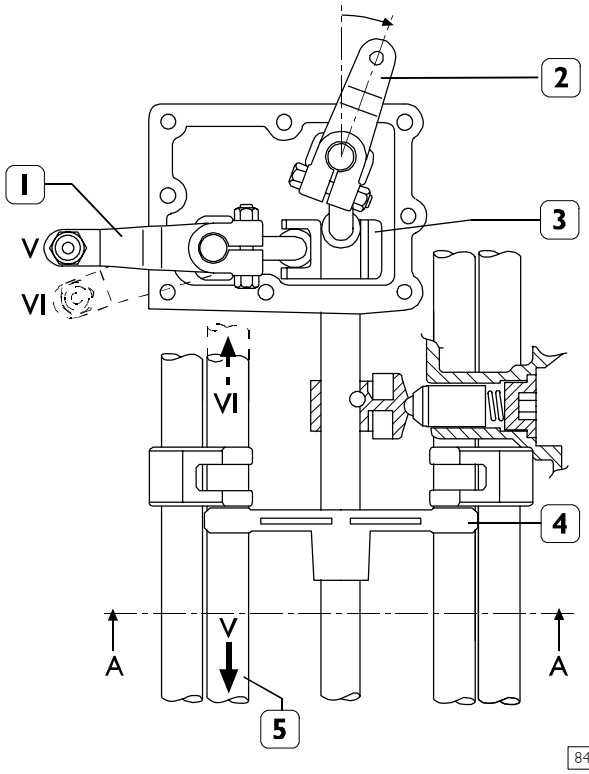

This arrangement is obtained by moving the selector lever (2) clockwise. In this way, the selector (4) is inserted in the 5th/6th gear engagement rod (5).
By moving the lever (1), the slider (3) will axially move the 5th/6th gear engagement rod.

Reverse gear selection and engagement arrangement

Figure 1/4

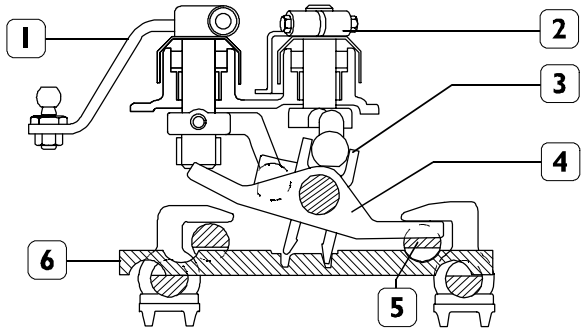

SECTION A-A

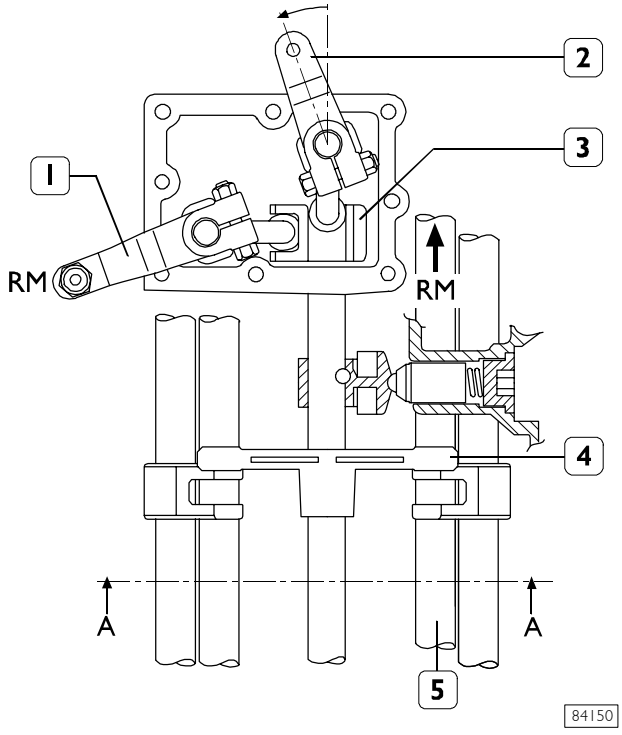

This arrangement is obtained by moving the selector lever (2) anticlockwise. In this way, the selector (4) is inserted in the reverse gear engagement rod (5).
By moving the lever (1), the slider (3) will axially move the reverse gear engagement rod (5).

Safety device

The transmission is equipped with a device which prevents the simultaneous engagement of two gears.

It consists of a suitably shaped rod (6) fitted transversally in the transmission box.

The slider (3), moves the rod (6) under the action of the lever (2). This keeps the selected gear engagement rod free and prevents movement of the other gears by engaging their respective grooves.

SPECIFICATIONS AND DATA

	TRANSMISSION	6 S 300
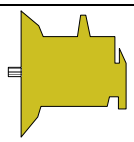	Type	Mechanical
	Input torque	320 Nm
	Weight	63 kg
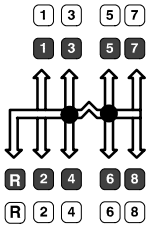	Speeds	6 forward speeds 1 reverse speed
	Speed control	Mechanical
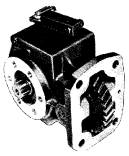	Power take-off	Optional
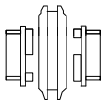	Speed engagement: Forward speeds ❑ 5th/6th - 3rd/4th ❑ 1st/2nd Reverse speed Speed retention mechanism	 Single-cone synchronizer Dual-cone synchronizer clip-on, in new version transmission with single taper synchroniser ring Sliding sleeves retained by pawls and springs
	Gears	Helical-toothed constant mesh gears
	Gear ratio First Second Third Fourth Fifth Sixth Reverse	 6.72 3.94 2.55 1.77 1.29 1.00 6.05
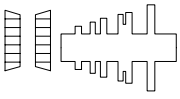	Shaft bearings: Main shaft Transmission shaft	 watertight ball bearing tapered roller

SPECIFICATIONS AND DATA

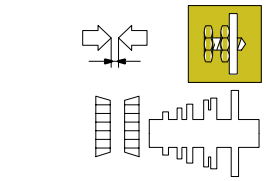	Transmission shaft bearing end play	0 ÷ -0.05 mm
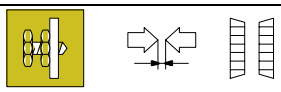	Transmission shaft bearing end play adjustment	by shims
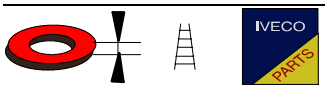	Shim thickness for transmission shaft bearing end play adjustment	-
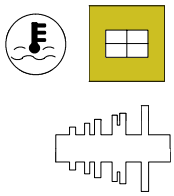	**Main shaft** Temperature for fitting: ❑ hubs for sliding sleeves ❑ 1st-R gear bushes and spacer ring ❑ front bearing*	 80° ÷ 110°C 80° ÷ 110°C 90°C (max 120°C)
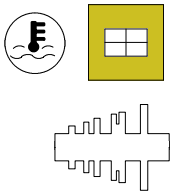	**Transmission shaft** Temperature for fitting: ❑ bearings ❑ 5th-4th gears	 80°C (max 120°C) 170°C ÷ 160°C
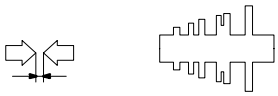	Gear end float: 1st - 3rd - 4th - R - 5th gear 2nd gear	 0.15 ÷ 0.40 mm 0.25 ÷ 0.5 mm
	5th - 4th gear sliding sleeve hub retaining ring end float	0 ÷ 0.15 mm
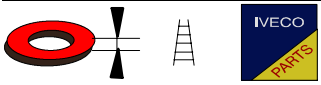	5th - 4th gear sliding sleeve hub retaining ring thickness	-
	Retaining ring end float: ❑ transmission shaft front bearing ❑ main shaft roller bearing	 0 ÷ 0.1 mm 0 ÷ 0.1 mm
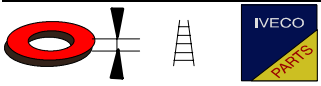	Transmission shaft rear bearing retaining ring thickness	-
	Sealant	LOCTITE 574 LOCTITE 242
	Type of oil: Quantity	**TUTELA TRUCK GEARLITE** 2.7 litres 2.43 kg

* = Do not use hot air equipment to heat bearing.

TIGHTENING TORQUES

Figure 2

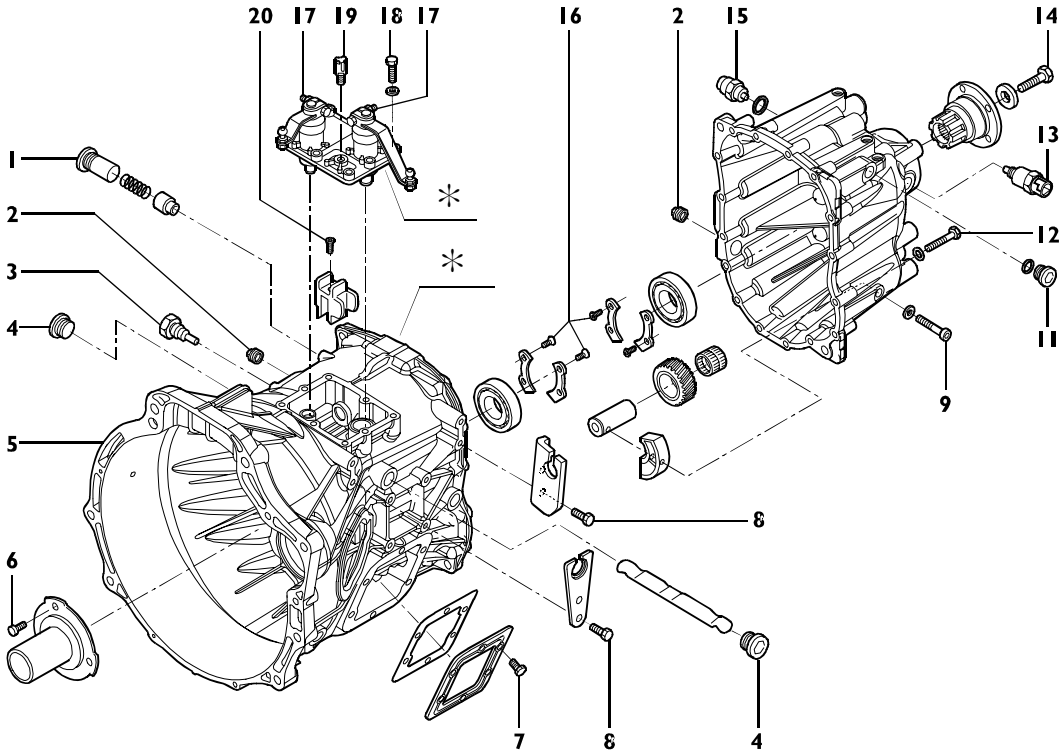

	DESCRIPTION	TORQUE	
		Nm	kgm
1	Plug retaining spring and reverse gear hardening push rod	32 ±10%	3.2 ±10%
2	M22x1.5 plug	50	5
3●	3rd and 4th gear fork articulation pins	45●	4.5
4	Plugs for rod preventing gear engagement	32	3.2
5	Clutch housing, screw to fasten clutch housing to crankcase	80	8
6	Constant mesh shaft cover fastening screw	23 ±15%	2.3 ±15%
7	Screw securing p.t.o. side cover	46 ±15%	4.6 ±15%
8	Screw securing control cable mounting	23 ±15%	2.3 ±15%
9	Screw securing reverse gear shaft	23 ±15%	2.3 ±15%
11	Side plug on rear cover	35	3.5
12*	Screw securing rear cover	23 ±15%	2.3 ±15%
13	Speedometer transmitter fixing	50	5
14	Screw locking sleeve for transmission coupling on main shaft	235	23.5
15	Fixing switches and reversing lights	40	4
16●	Screw securing ball bearing retaining ring	9.5 ±15%	0.9 ±15%
17	Nut for screw securing lever to control rod	34 ±15%	3.4 ±15%
18	Screw securing gear control mounting	23 ±15%	2.3 ±15%
19	Oil vapour breather	10 ±15%	1 ±15%
20●	Screw securing driver to main rod	9.5●	0.9

* Spread LOCTITE 574 sealant on the contact surfaces
● Spread LOCTITE 242 on the thread

TOOLS

TOOL NO.		DESCRIPTION
99322205	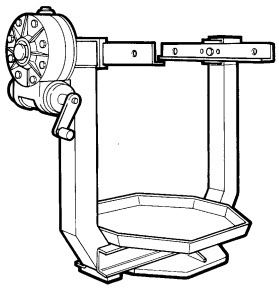	Assemblies overhaul revolving stand
99322225	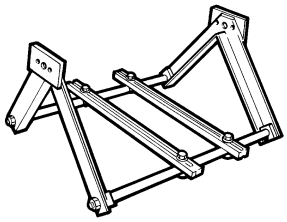	Unit support (to use with stand 99322205)
99340205	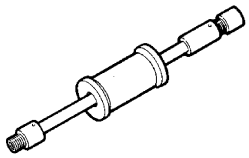	Percussion extractor
99341003	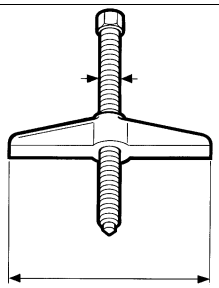	Single-acting scaffold
99341004	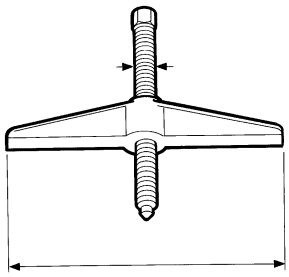	Single-acting scaffold
99341011	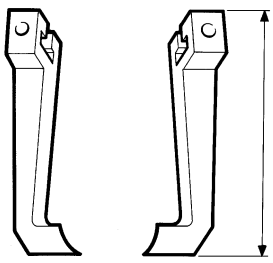	Pair of brackets

TOOLS

TOOL NO.		DESCRIPTION
99341012	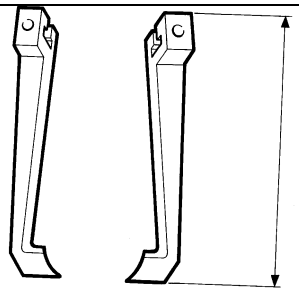	Pair of brackets
99341015	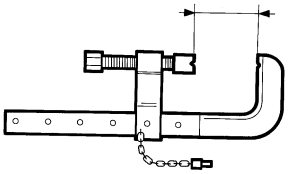	Constrictor
99341017	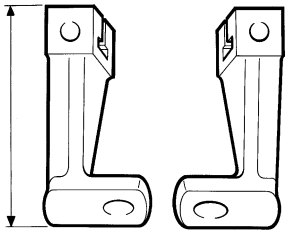	Pair of brackets with hole
99345003	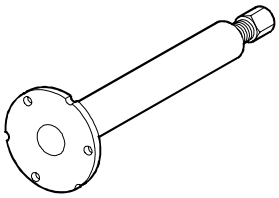	Extractor for gearbox front half-casing
99348001	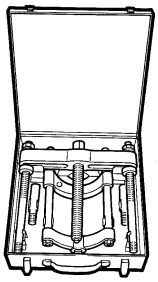	Extractor with locking device
99348004	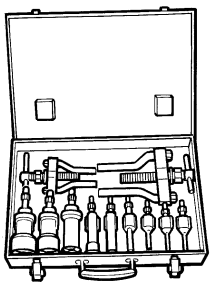	Universal male extractor from 5 to 70 mm

TOOLS

TOOL NO.		DESCRIPTION
99360522	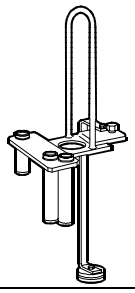	Tool to extract and insert main shaft, transmission shaft and rod - fork assembly
99370006	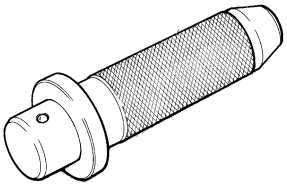	Handle for interchangeable drivers
99370007	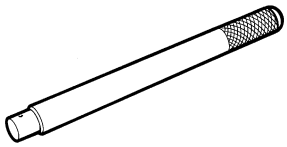	Handle for interchangeable drivers
99370234	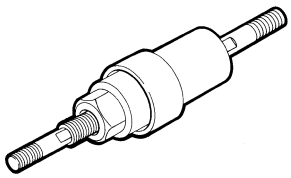	Tool for fitting rear bearing and sleeve on main shaft
99370317	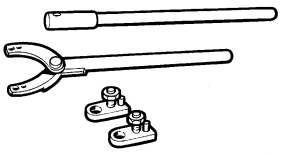	Reaction lever with extension for holding flange
99370629	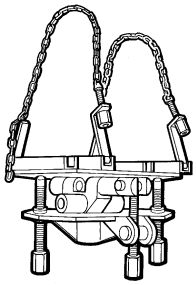	Transmission support during removal from and refitting to vehicle

TOOLS

TOOL NO.	DESCRIPTION	
99371057	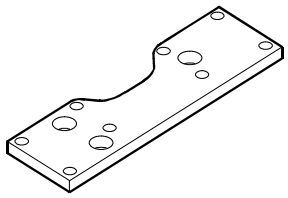	Bracket for supporting gearbox during overhaul (use with 99322205-99322225)
99374091	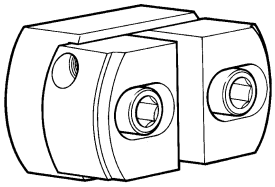	Punch for fitting bearing external races (dia. 55 ÷ 69 mm use with 99370007)
99374454	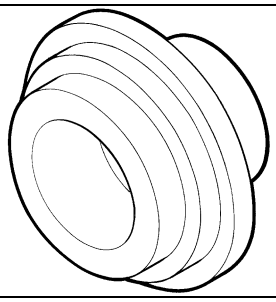	Keying device to fit gasket on transmission rear cover (use with 99370006)
99374455	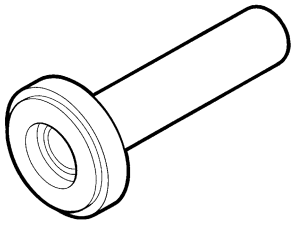	Keying device to fit gasket on transmission

Figure 3

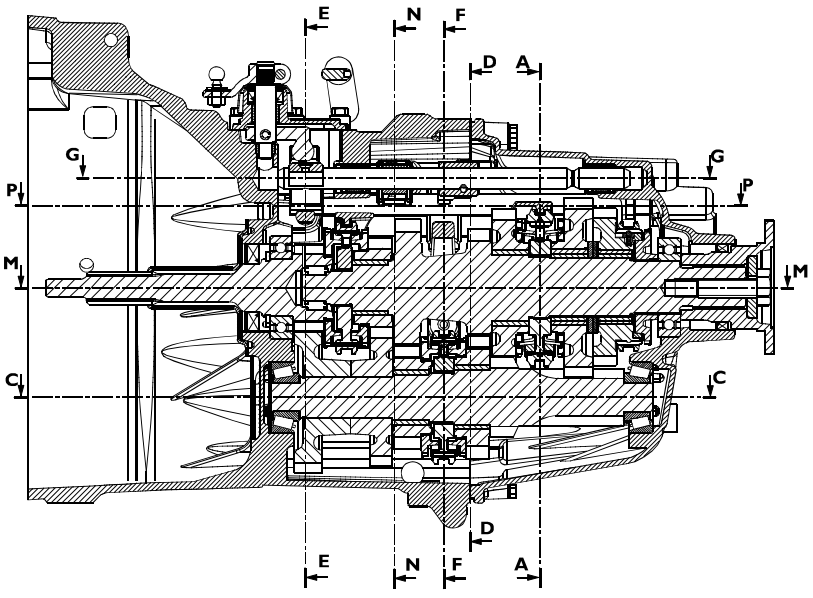

LONGITUDINAL SECTION

Figure 3/1

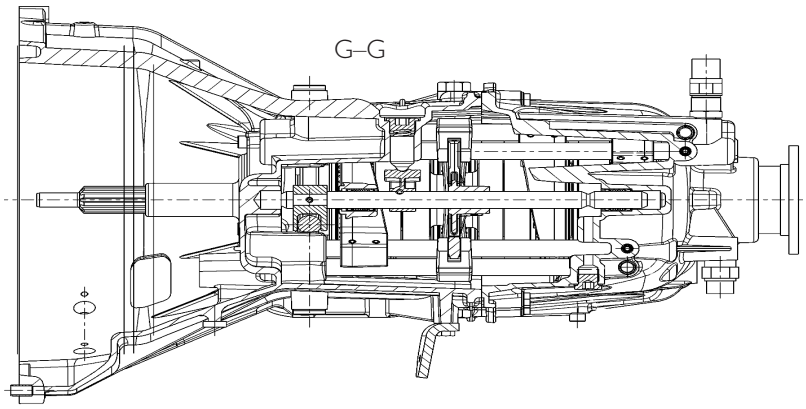

85907

Figure 3/2

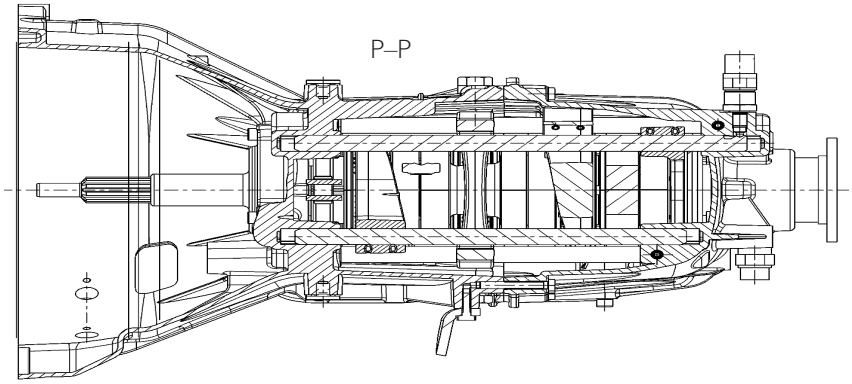

85908

Figure 3/3

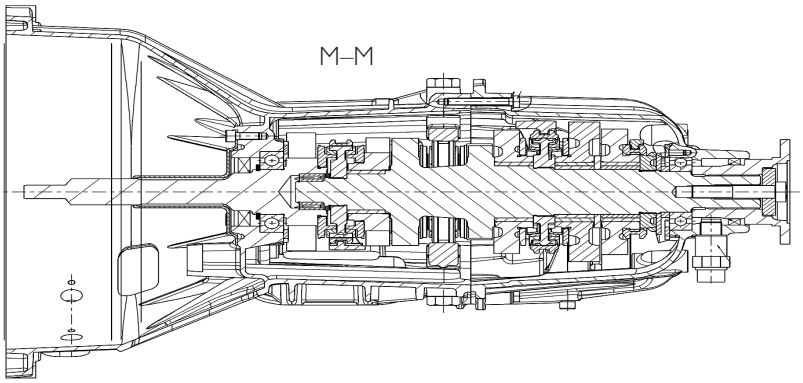

85909

Figure 3/4

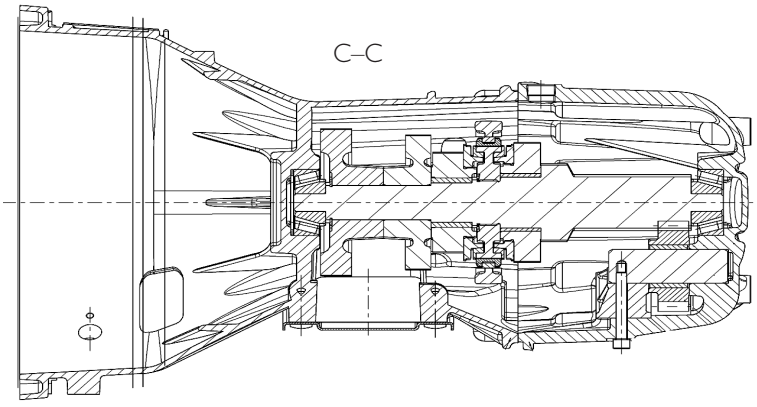

85910

Figure 3/5

E–E

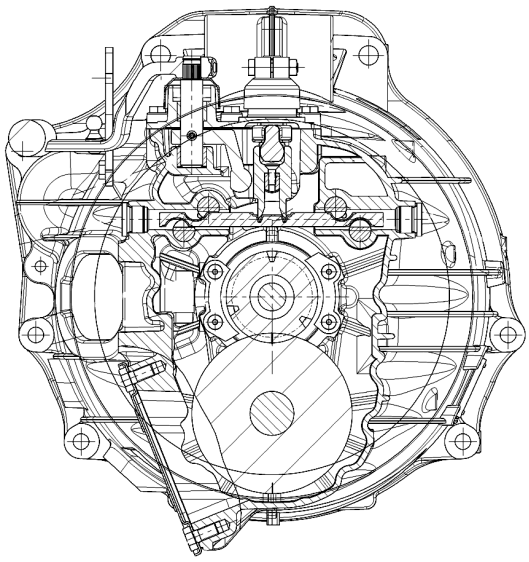

85911

Figure 3/6

N–N

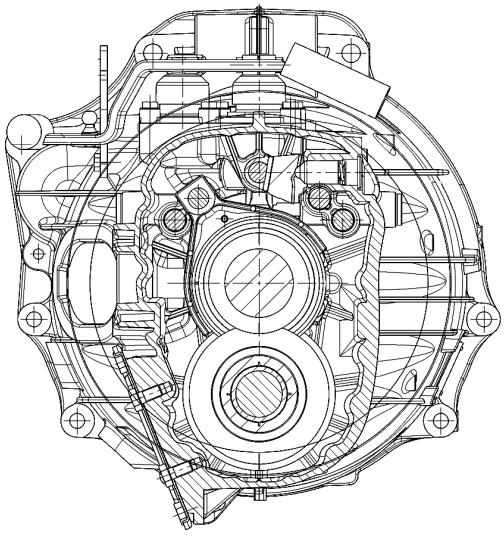

85912

Figure 3/7

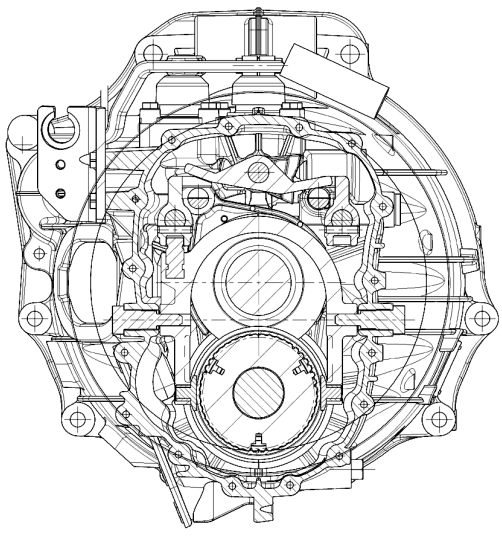

85913

Figure 3/8

D–D

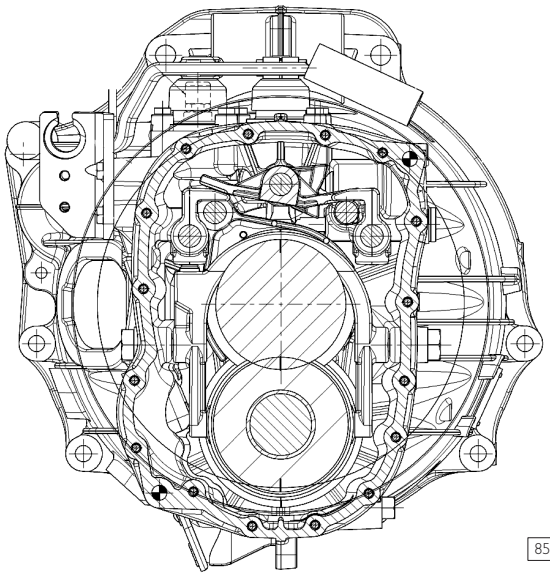

85914

Figure 3/9

A–A

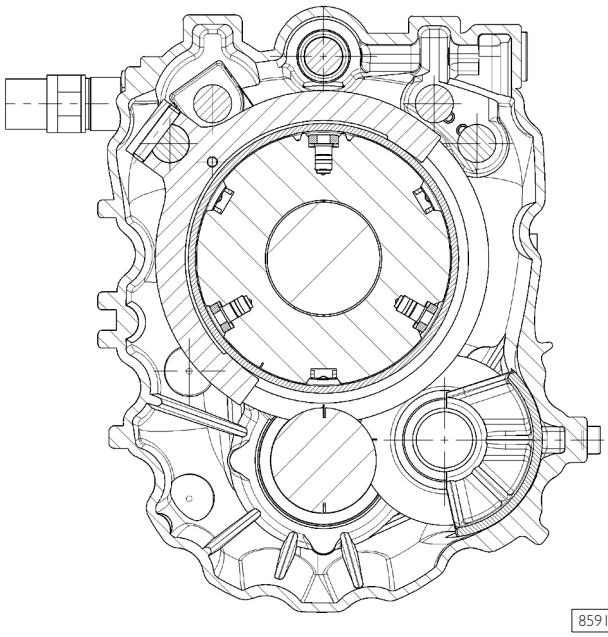

85915

6 S 300 TRANSMISSION TRANSVERSAL CROSS–SECTIONS

530210 OVERHAULING THE TRANSMISSION

Figure 4

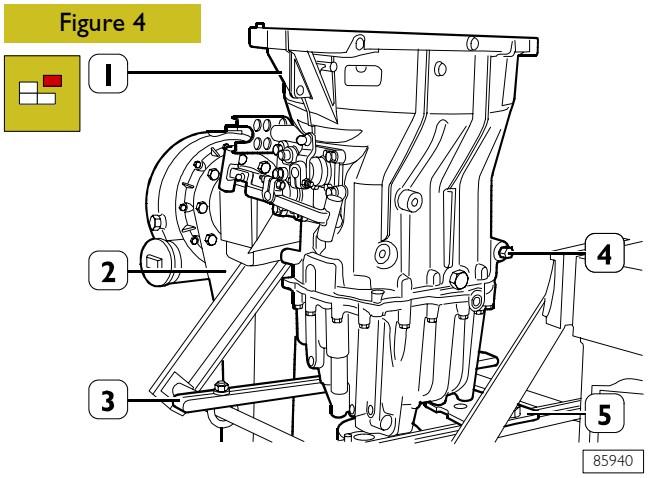

Fit the gearbox (1) with the bracket 99371057 (5) and secure this to the brackets 99322225 (3) on the rotary stand 99322205 (2).
Remove the plug (4) and drain off the lubricating oil.

530220 Gear control box Disassembly

Figure 5

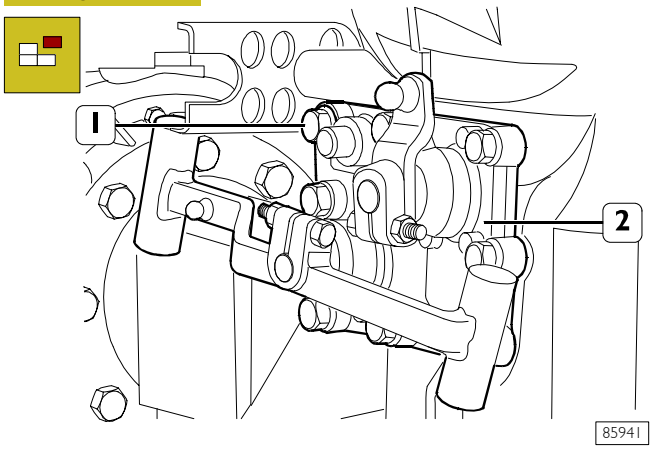

Shift to neutral.
Take out the fixing screws (1) and remove the gear control box (2).

Figure 6

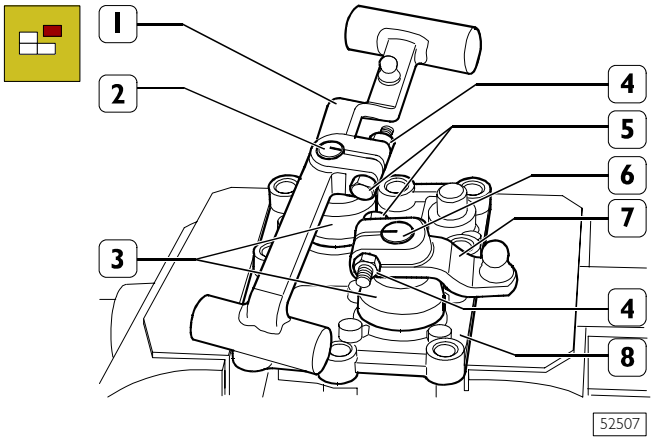

Mark the assembly position of the levers (1 and 7) on their respective shafts (2 and 6). Loosen the nuts (4) for the retaining screws (5).
Extract the levers (1 and 7) from the shafts (2 and 6) and extract these from the box (8). Take off the caps (4).

Figure 7

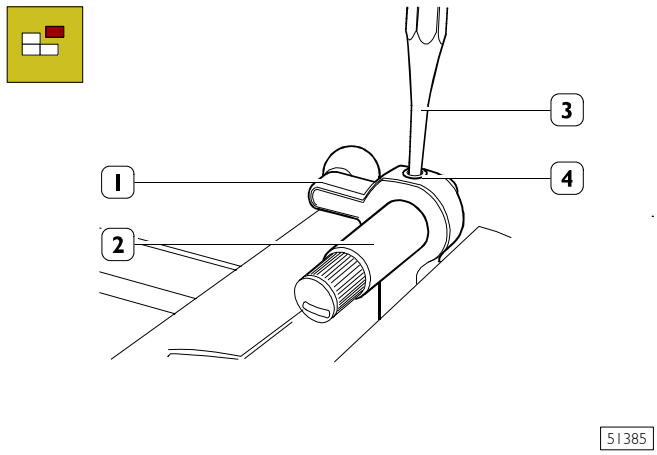

With a punch (3), remove the spring pin (4) and extract the shaft (2) from the internal lever (1).
Repeat these steps for the other shaft.

Figure 8

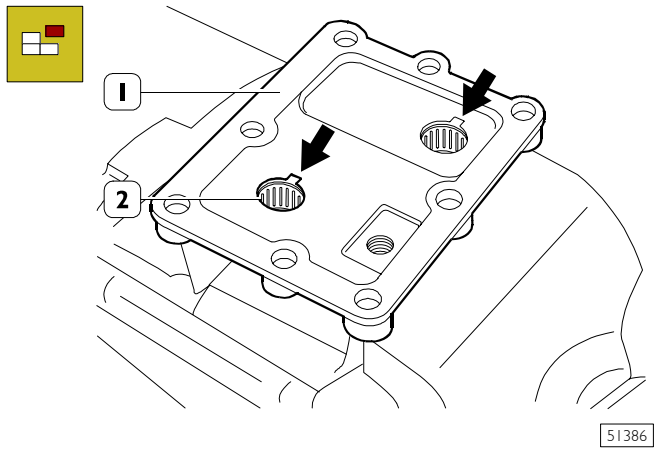

Use a punch on the point shown by the arrow and eject the O-rings and roller bushes (2) from the box (1).

Assembly

Figure 9

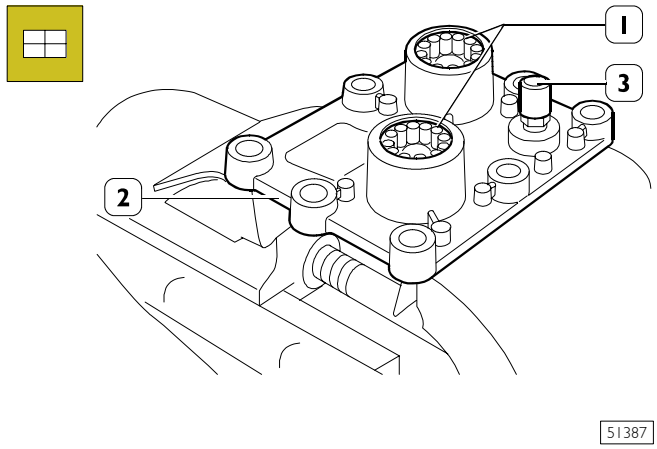

Thoroughly clean the oil vapour vent (3).
With a suitable punch, mount the roller bearings (1) in the box (2).

Figure 10

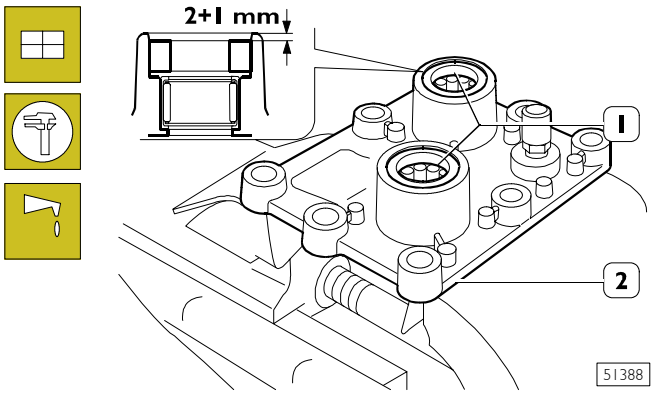

Using a suitable punch, mount the O-rings (1) in the box (2), positioning them at the height shown.

Pack the gap between the O-ring and roller bearing with grease.

Figure 11

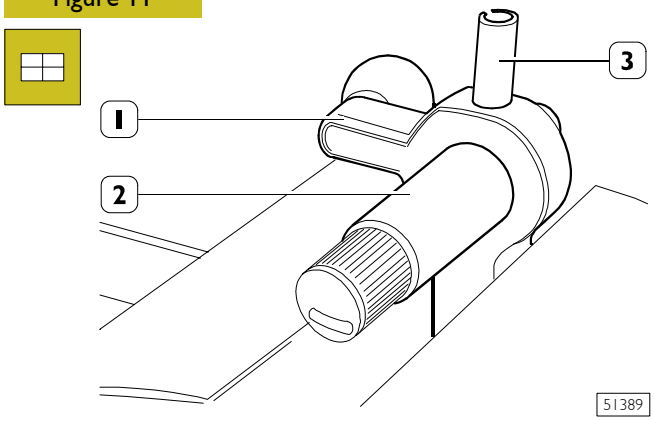

Mount the selection and engagement levers (1) on their respective shafts (2) and fasten them with the spring pins (3).

The spring pin (3) must be positioned with the cut horizontal.

Figure 12

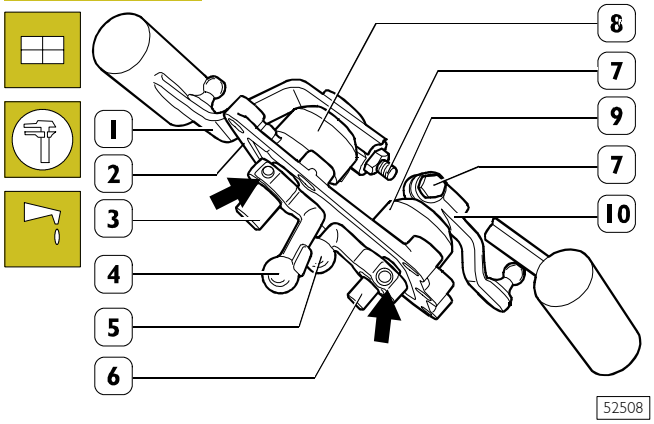

Lubricate the roller bearings (1, Figure 10) with TUTELA MR3 grease and mount the shafts (3 and 6) complete with the internal levers (4 and 5) in the box (2). Mount the caps (8 and 9) and levers (1 and 10) on the shafts (3 and 6) in the position marked during disassembly without tightening the nuts for the fixing screw (7).

Figure 13

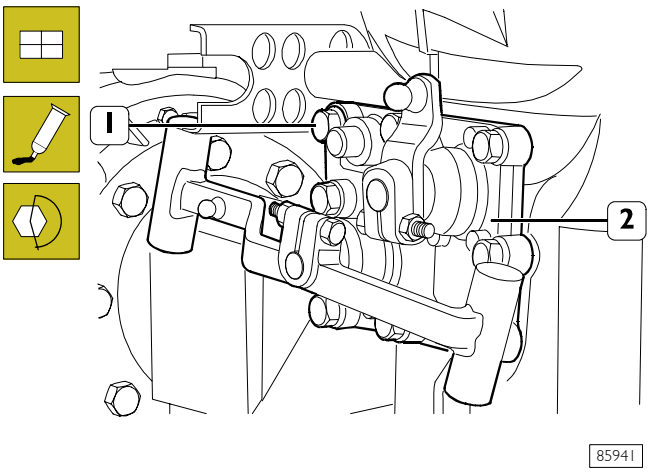

Thoroughly clean the mating surfaces of the gear control box (2) and apply LOCTITE 574 sealant on them.

Fit the box (2) on the transmission, taking care that the levers and shafts are positioned correctly in their respective seats.

Tighten the screws (1) to the required torque.

Figure 14

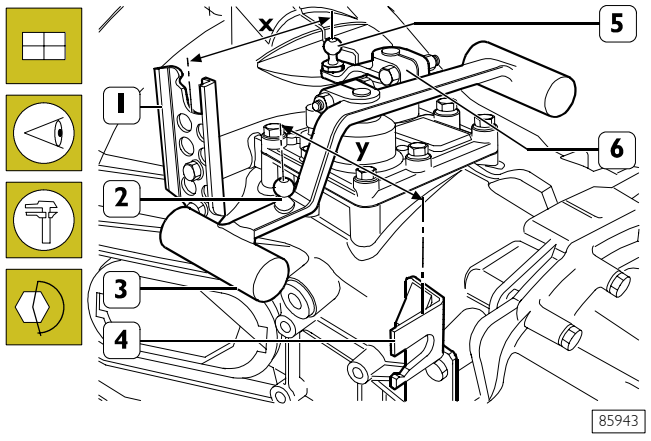

Check the assembly of the selection (6) and engagement (3) levers.

The selection (6) and engagement (3) levers must be mounted on their respective shafts so that:

- between the c/c distance of the pin (5) of the selection lever (6) and the outside of the bracket (1) there is a distance **X** of 134 mm;
- between the c/c distance of the pin (2) of the engagement lever (3) and the outside of the bracket (4) there is a distance **Y** of 135 mm.

If a different value is measured, orientate the lever concerned on the respective shaft appropriately.

Then tighten the nuts for the screws to the required tightening torque.

Disassembling the transmission

Figure 15

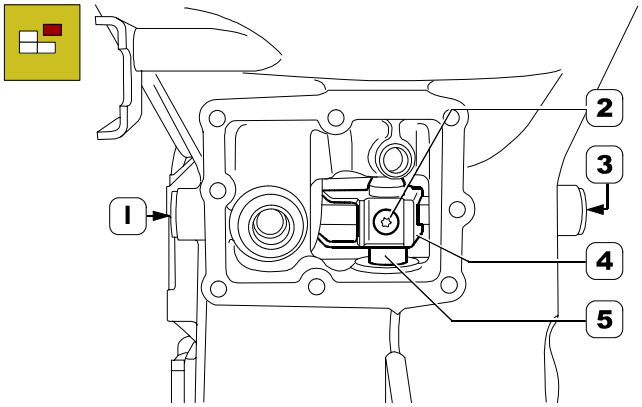

51924

Shift to neutral.
Dismantle the gear control box as described under the relevant heading.

Remove the two side plugs (1 - 3). Take out the screw (2) fixing the driver (4) to the rod (5).

Figure 16

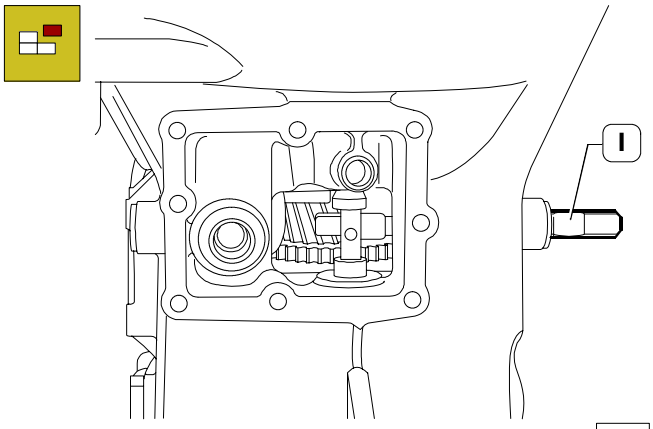

51925

Mark the assembly position of the rod (1) preventing engagement of more than one gear at the same time and remove it from the transmission.

Figure 17

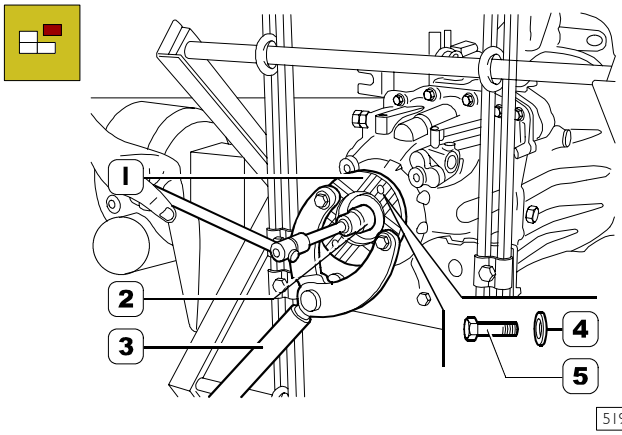

51926

Block rotation of the sleeve (1) by applying the lever 99370317 (3). With the bushing (2) remove the screw (5) with the washer beneath (4).

Take out the lever 99370317 (3).

Figure 18

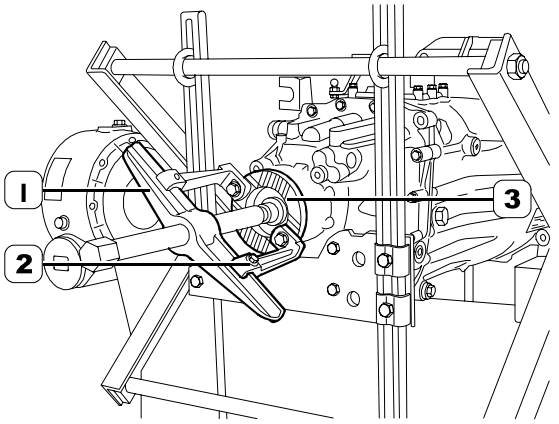

51927

Extract the sleeve (3) from the main shaft.

If this is difficult, extract the sleeve (3) with the extractor composed of bridge (1) and clamps (2).

Figure 19

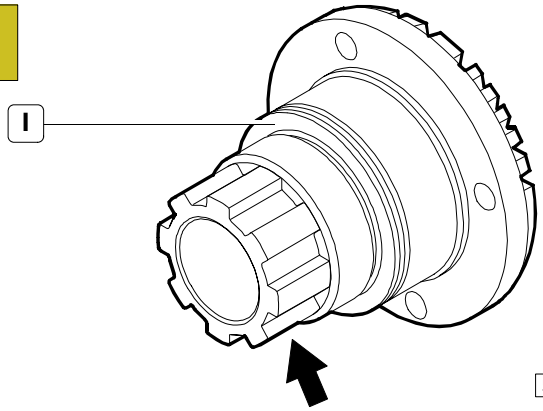

51928

When putting away the sleeve (1) take care not to damage the phonic wheel (→) obtained by machining.

Figure 20

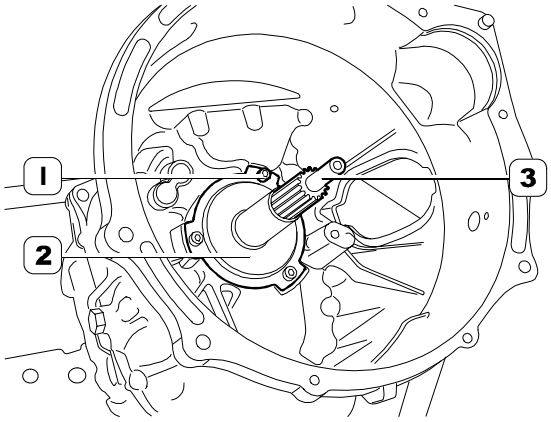

51829

Remove the screws (1) and take off the cover (2) protecting the input shaft (3).

Figure 21

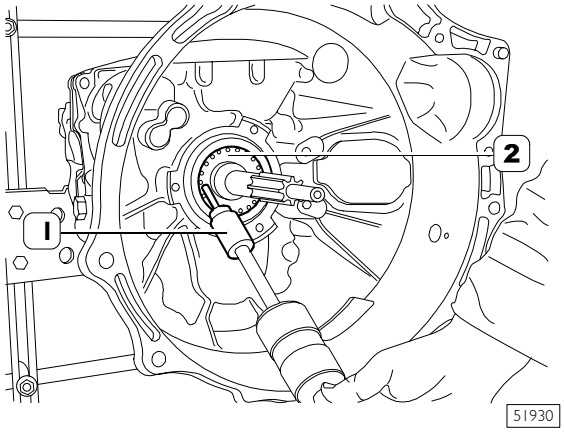

Perforate the o-ring (2) with a suitable hook and ram extractor 99340205 (1) and remove the o-ring from the transmission box.

Figure 22

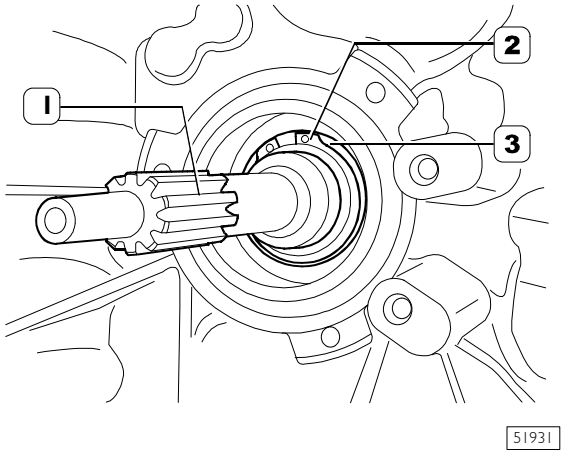

Remove the circlip (2) retaining the front bearing (3) from the input shaft (1).

Figure 23

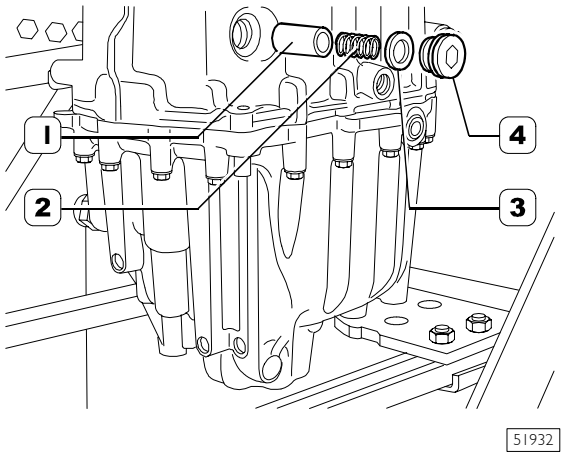

Take out the plug (4) with the washer (3), and extract the spring (2) and the push rod (1).

Figure 24

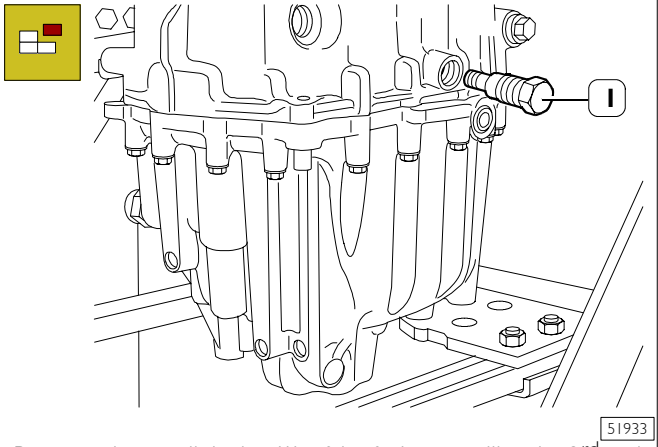

Remove the two link pins (1) of the fork controlling the 3rd and 4th gears.

Figure 25

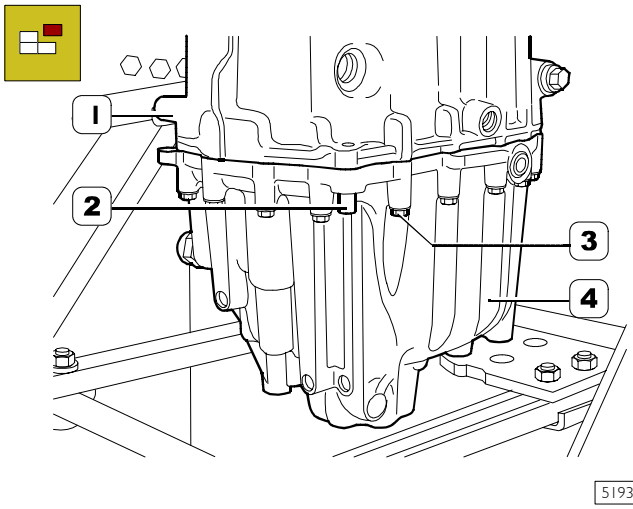

Push the two centring pins (2) downwards to free them from the transmission (1).
Remove the screws (3) securing the rear cover (4) to the transmission (1).

Figure 26

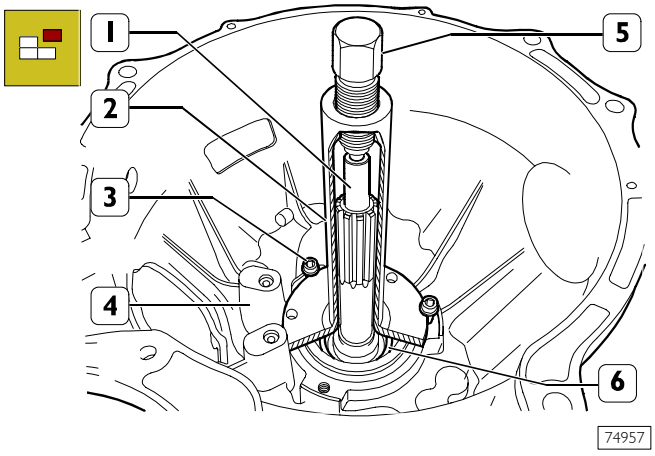

Fit the drive input shaft (1) with tool 99345003 (2) and secure this onto the gearbox (4), with the screws (3); screw down the screw (5) of tool (2) to extract the gearbox from the bearing (6).

Figure 27

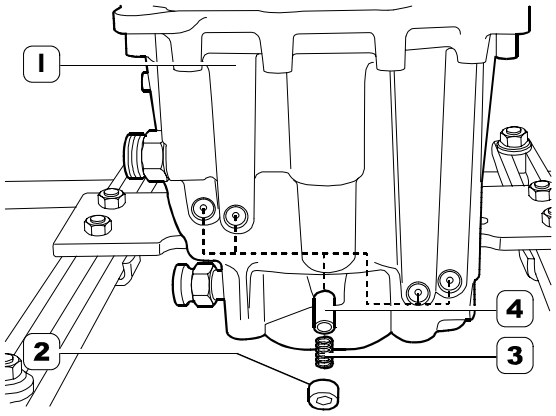

Drill the cups (2), screw a special screw into them.

Using the screw, extract the cups (2) from the rear cover (1). Remove the springs (3) and pawls (4).

Figure 28

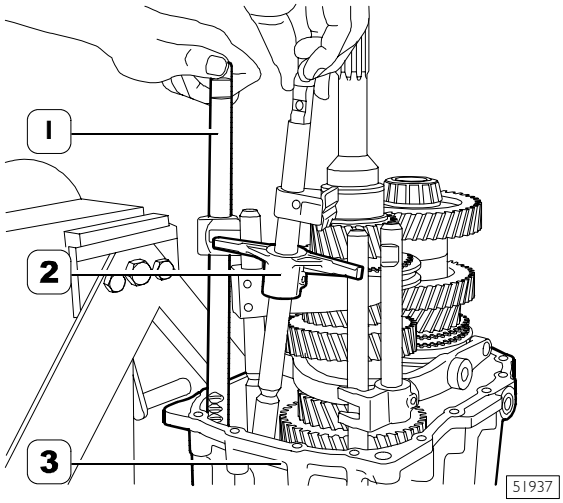

Remove the rod (1) controlling the 3rd/4th gear and the main rod (2) from the rear cover (3).

Figure 29

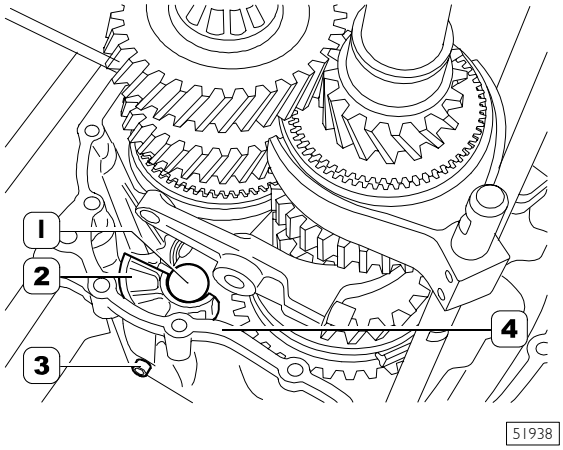

Take out the screw (3) and remove the reverse gear shaft (1) with the mounting (2) from the rear cover (4).

Figure 30

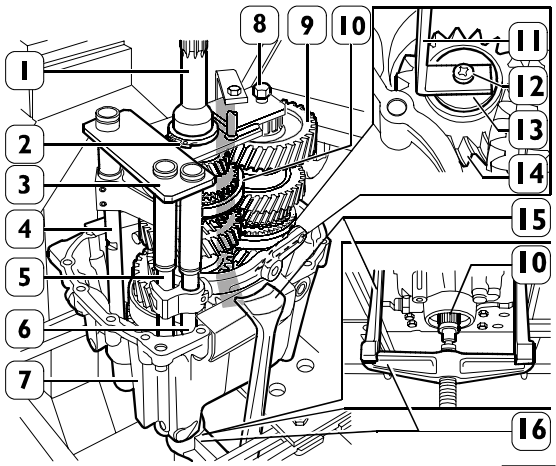

Mount the tool 99360522 (3) onto the rods (4, 5 and 6), on the input shaft (1) and on the transmission shaft (9).

Secure the tool 99360522 (3) on the input shaft (1) with the retaining ring (2) and with the screw (8) to the transmission shaft (9).

Insert the part (13) of the bracket (11) into the reverse gear (14) and tighten the screw (12).

Hook the tool 99360522 (3) onto the lift.

Apply the extractor composed of the bridge 99341004 (16) and ties 99341012 (15) onto the rear cover (7).

In order not to damage the rear cover (7), place special protections between it and the ties (15).

Using the extractor screw and the lift on the main shaft (10), remove the main shaft (10) from the rear ball bearing and extract the shaft-rod assembly from the rear cover (7).

Figure 31

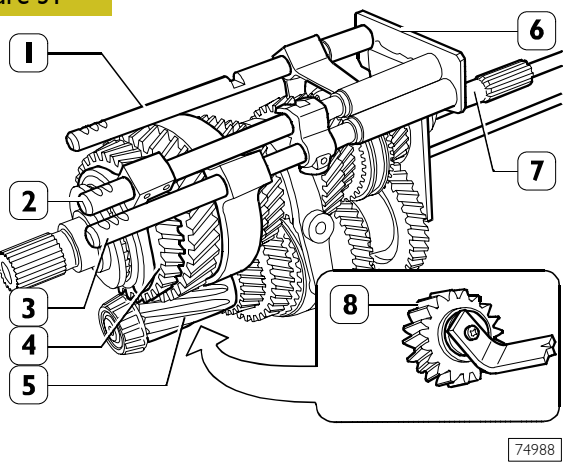

Put the assembly you have just removed onto the workbench. Remove the tool 99360522 (6), separate the input shaft (4) from the reverse gear (8) together with the roller bearings, transmission shaft (5), drive input shaft (7) with the relevant synchronizer ring and the rods (1-2-3).

Disassembling the rear cover bearings

Figure 32

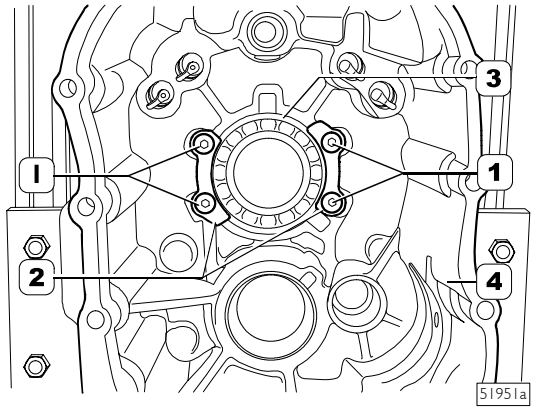

Remove the screws (1) securing the plates (2).

Take out the plates (2).

Turn over the rear cover (4) and remove the bearing (3).

Figure 33

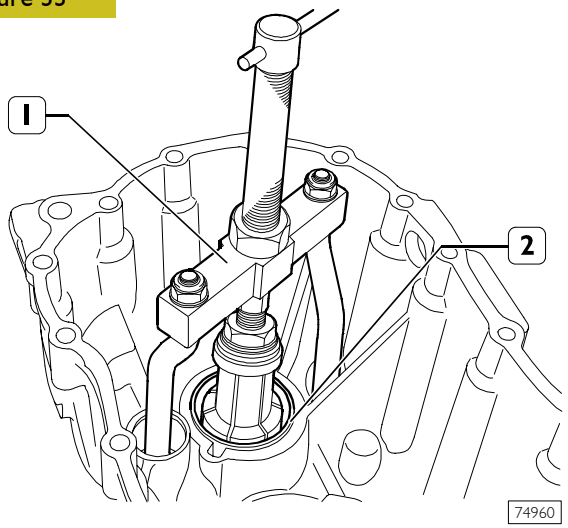

Using universal extractor 99348004 (1), remove the outer ring (2) of the transmission shaft bearing.

Figure 34

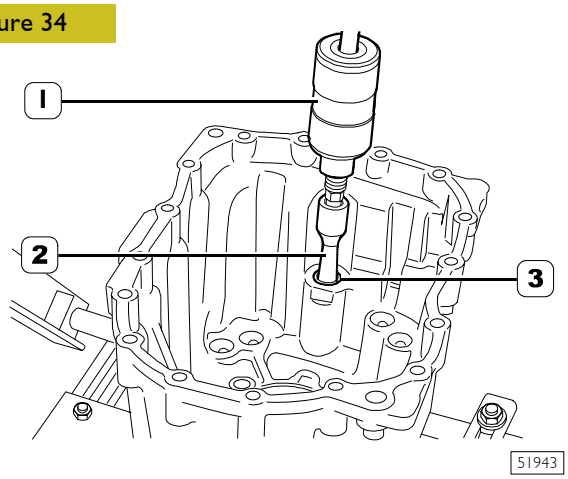

Using the percussion extractor 99340205 (1) and part 99348004 (2), extract the bushing with the ball bearings (3).

Figure 35

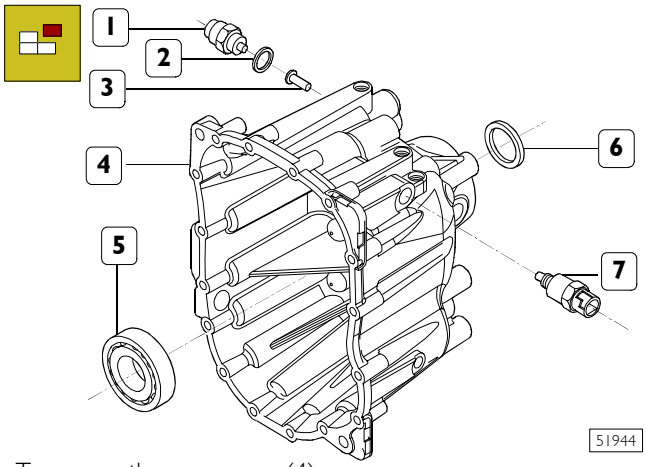

Turn over the rear cover (4).

Take out the O-ring (6).

Using a suitable punch, remove the ball bearing (5). Remove the tachograph sensor (7) and the reversing light switch (1) with the washer (2) and extract the push rod (3).

Disassembling the transmission bearings

Figure 36

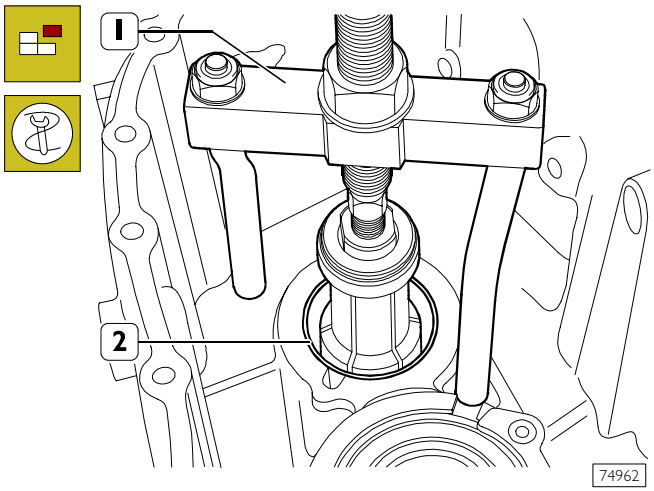

Using universal extractor 99348004 (1), remove the outer ring (2) of the transmission shaft bearing.

Figure 38

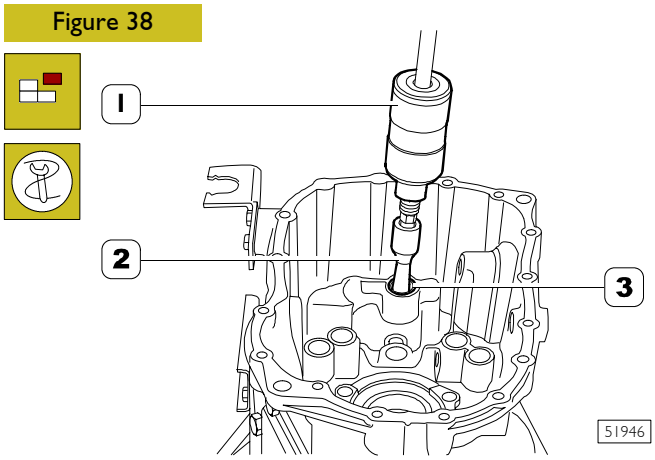

Using the percussion extractor 99340205 (1) and part 99348004 (2), extract the bushing with the ball bearings (3).

Figure 38

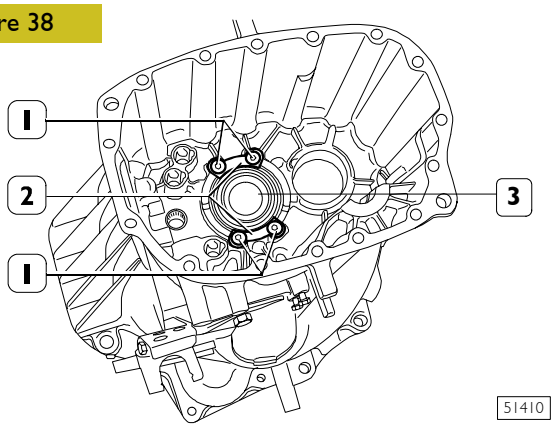

Remove the screws (1) securing the plates (2).

Take out the plates (2).

Turn over the transmission. Using a suitable punch, remove the ball bearing (3).

Figure 39

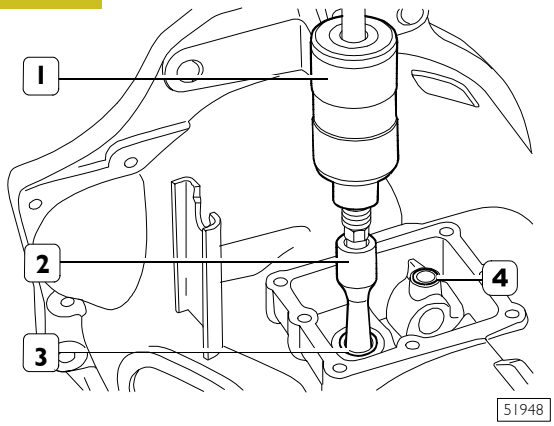

Using the percussion extractor 99340205 (1) and part 99348004 (2), extract the roller bearing (4-3).

Disassembling the main shaft

Mark the assembly position of each synchronizing device on the respective gear.

Figure 40

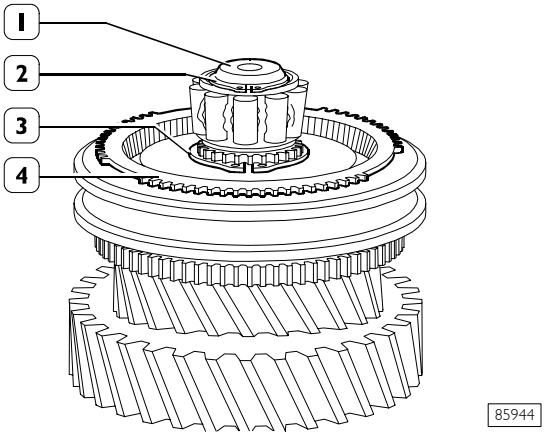

Tighten the primary shaft (1) in a vice. Remove the synchroniser ring (4) and the circlip (2). Remove the circlip (3) from its housing.

Figure 41

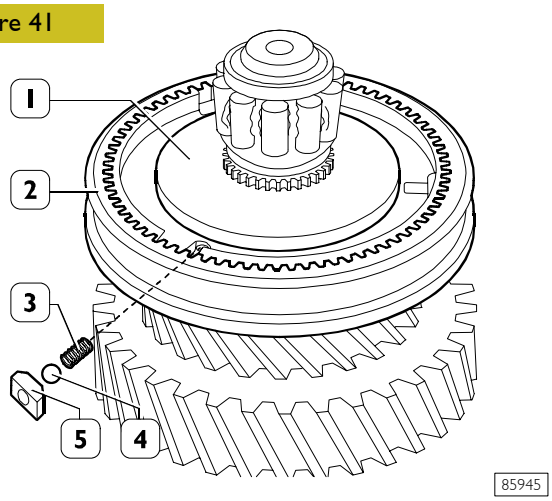

Remove the sliding sleeve (2) for engaging 5th - 6th gear from the hub (1) and, taking care as the plugs (5) come out with the balls (4) and springs (3), recover them.

Figure 42

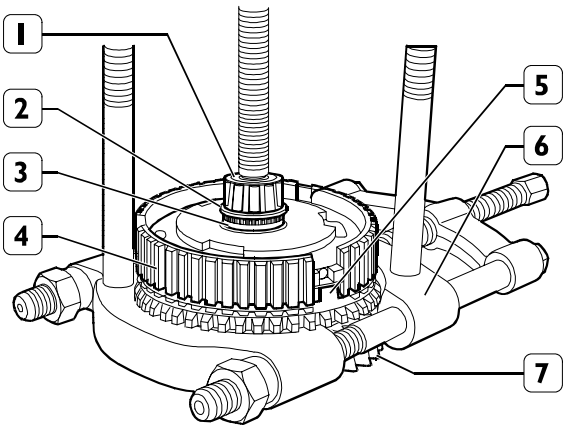

Use extractor 99348001 (6) as shown in the figure to extract the primary shaft (1), the 5th gear (7), the synchroniser ring (5), the hub (4), the circlip (3) and the roller bearing (2).

Figure 43

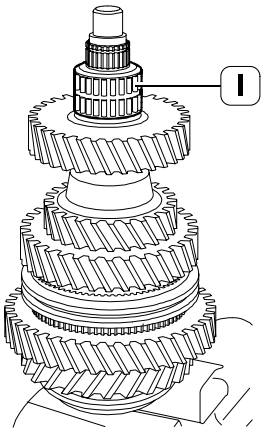

Remove the roller half cages (1).

Figure 44

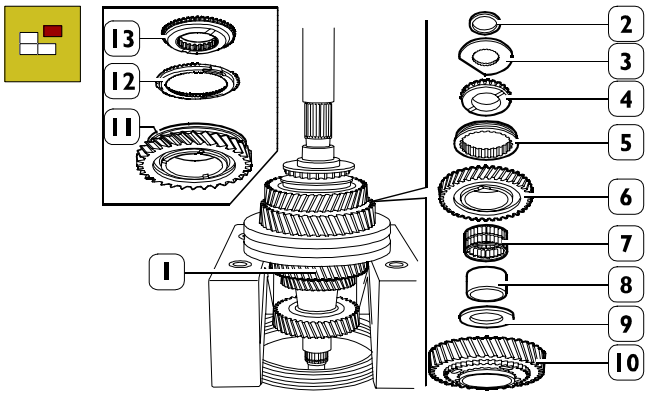

85948

With the hydraulic press, remove the following from the primary shaft (1): 1st gear (10), shim (9), bushing (8), roller cage (7); for transmission without synchronised reverse: reverse gear (6); sliding sleeve (5), outer gear wheel (4), inner gear wheel (3) and shim (2); for transmission with synchronised reverse: reverse gear (11) with engagement parts, synchroniser ring (12) and gear (13).

Figure 44/1

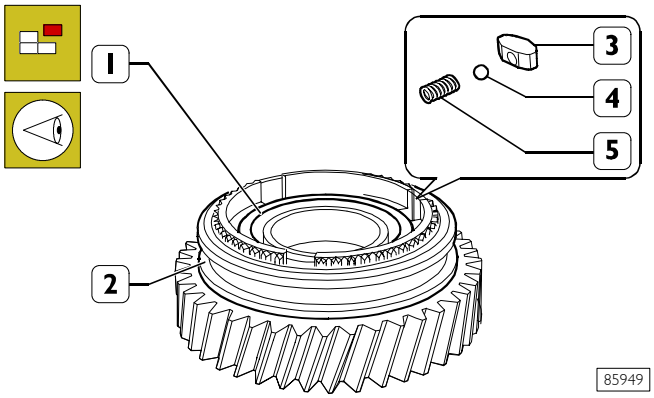

85949

Remove the reverse gear engagement sliding sleeve (2) from the reverse gear (1). Retrieve hub (1) and pads (3) with respective balls (4) and springs (5).

Figure 45

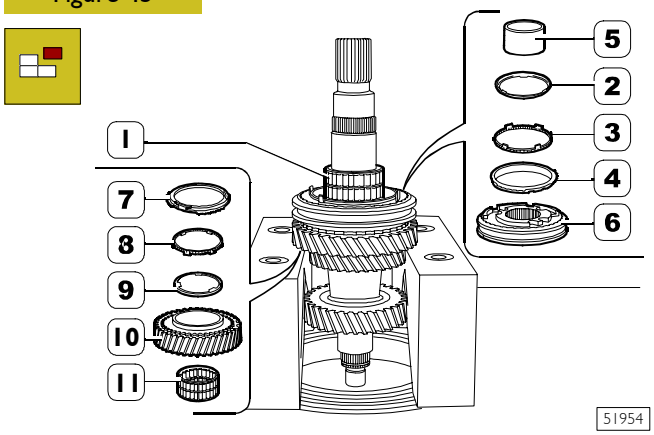

51954

Take out the synchronizer ring (4), middle ring (3), ring (2) and roller bearing (1).

Using a hydraulic press, remove the 2nd gear (10), ring (9), middle ring (8), synchronizer ring (7), synchronizer assembly (6) and the bushing (5). Take out the roller bearing (11).

Figure 46

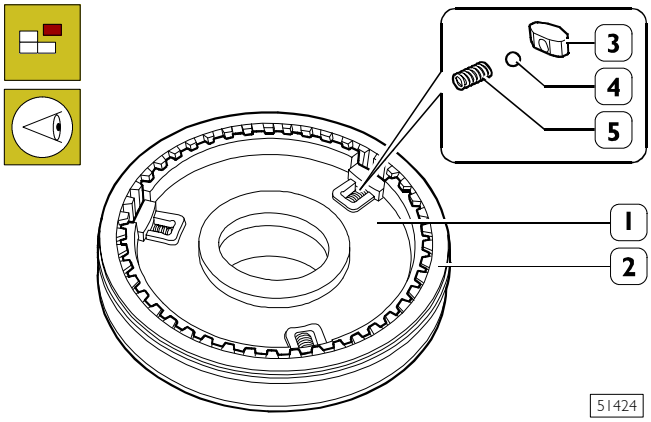

51424

Remove the sliding sleeve (2) for engaging 1st-2nd gear from the hub (1) and, taking care as the plugs (3) come out with their relative balls (4) and springs (5), recover them.

Disassembling the drive input shaft

Figure 47

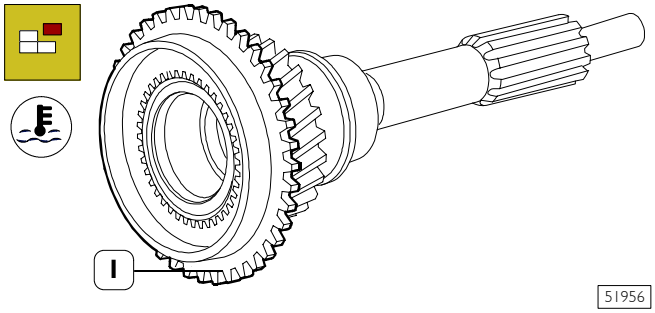

51956

To replace the cog-wheel (1), use the same general tools for disassembly as for assembly, heat it to a temperature of 80°C.

Disassembling the transmission shaft

Figure 48

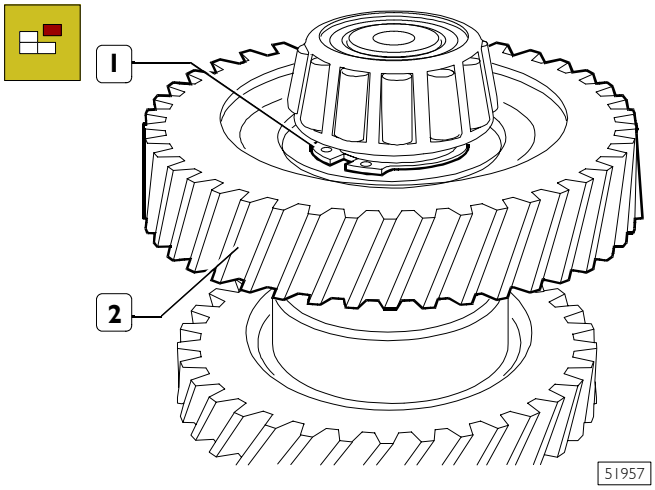

51957

Take out the retaining ring (1) holding the 6th gear (2).

Figure 49

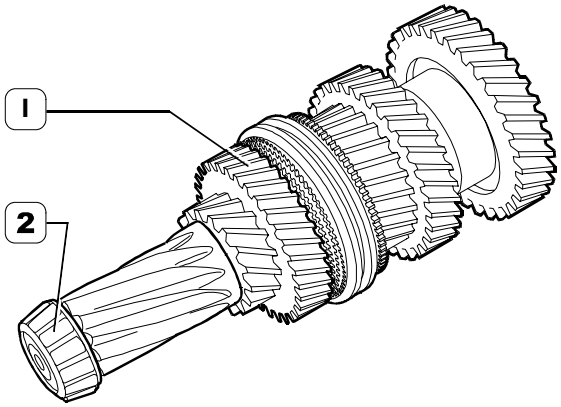

51958

Using general tools, extract the internal ring (2) of the rear tapered roller bearing from the transmission shaft (1).

Figure 50

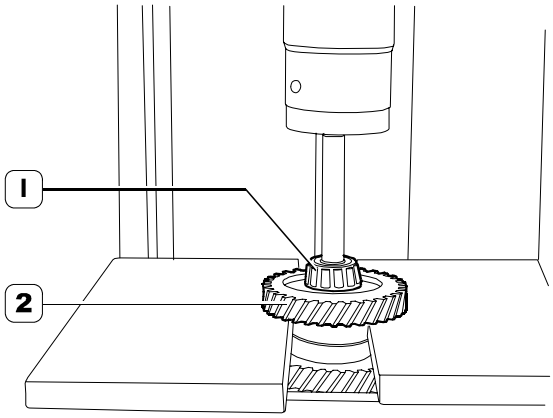

51959

Using a hydraulic press, extract the 6th gear (2) and the internal ring (1) of the tapered roller bearing from the transmission shaft.

Figure 51

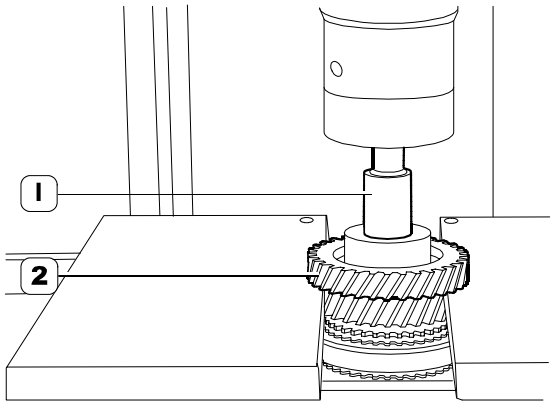

51960

Using a hydraulic press, remove the 5th gear (2) from the transmission shaft (1).

Figure 52

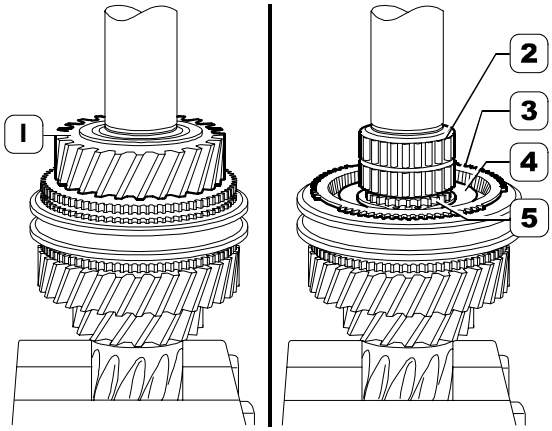

51961

Remove the 3rd gear (1) and the roller bearing (2). Remove the synchronizer ring (3). Remove the retaining ring (5) securing the hub (4).

Figure 53

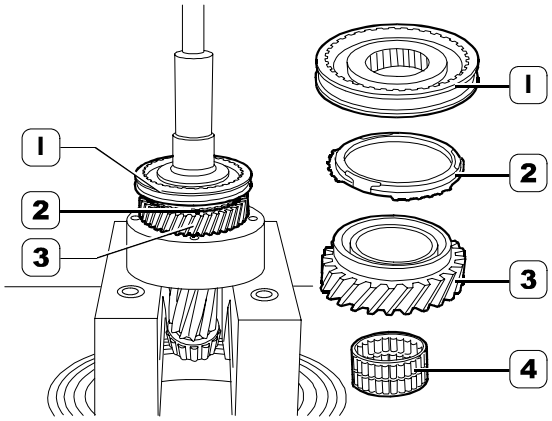

51962

Using a hydraulic press, remove the 4th gear (3), the synchronizer ring (2) and the synchronizer assembly (1).

Remove the half roller bearings (4).

Figure 54

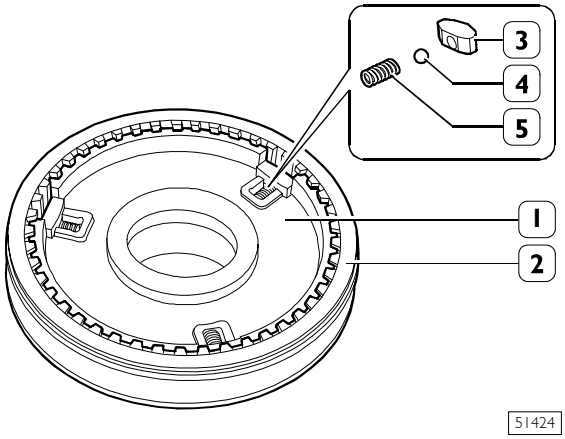

51424

Remove the sleeve (2) for engaging the 3rd-4th gear from the hub (1) and, taking care over the plugs (3) coming out with their relative balls (4) and springs (5), recover them.

Figure 55

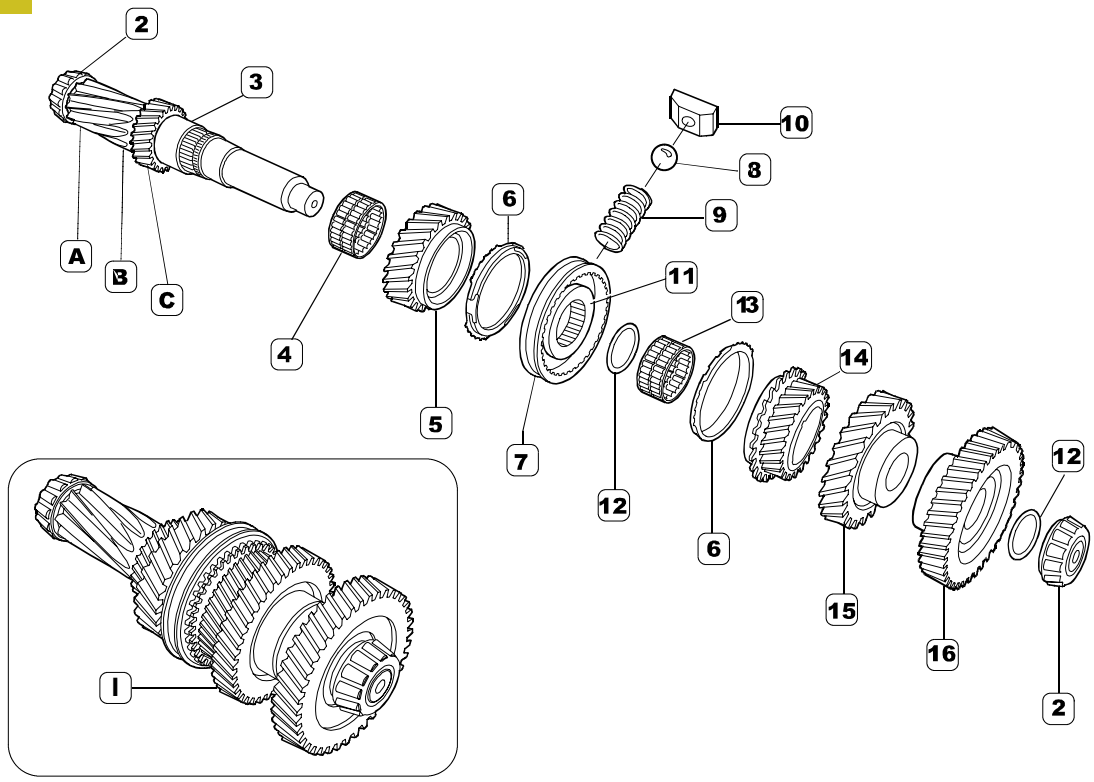

TRANSMISSION SHAFT ASSEMBLY DRAWING

1. Transmission shaft assembly - 2. Tapered roller bearing - 3. Transmission shaft with reverse gear toothing (A), 1st gear (B), 2nd gear (C) - 4. Tapered bearing - 5. 4th gear - 6. Synchronizer ring - 7. Sliding sleeve - 8. Ball - 9. Spring - 10. Plug - 11. Hub - 12. Retaining ring - 13. Half roller bearings - 14. 3rd gear - 15. 5th gear - 16. 6th gear.

Figure 56

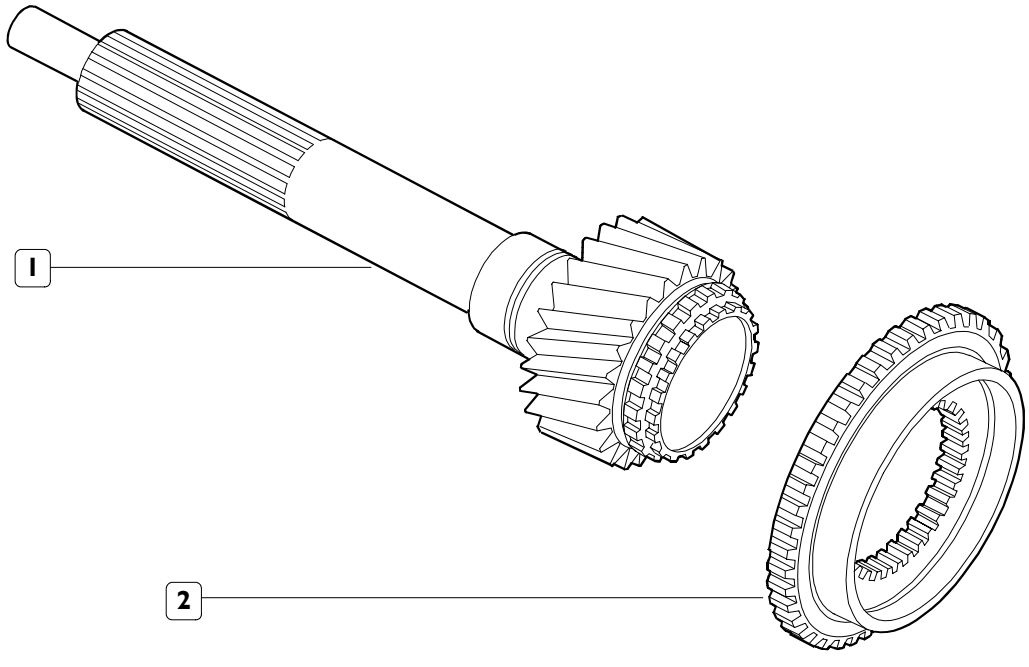

INPUT SHAFT ASSEMBLY DRAWING

1 - Input shaft - 2. Cog-wheel

Figure 57

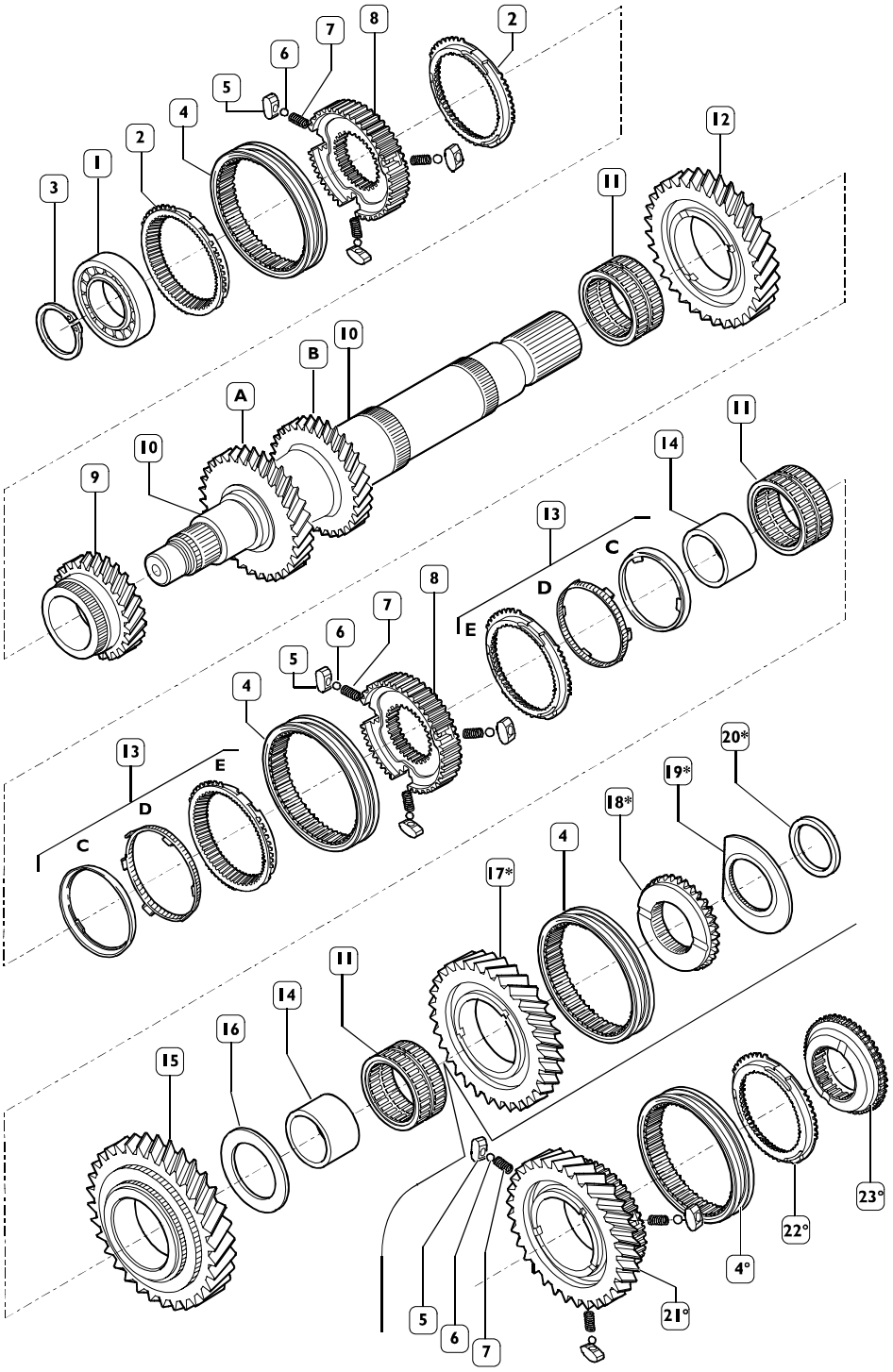

MAIN SHAFT ASSEMBLY DRAWING

1. Roller bearing - 2. Single cone synchronizer ring - 3. Retaining ring - 4. Sliding sleeve - 5. Plug - 6. Ball - 7. Spring - 8. Hub - 9. 5th gear - 10. Main shaft with 3rd gear toothing (A), 4th gear toothing (B) - 11. Roller bearing - 12. 2nd gear - 13. Dual cone synchronizer - internal ring C, middle ring D, synchronizer ring E - 14. Bushing - 15. 1st gear - 16. Spacer ring - 17.* Reverse gear - 18.* Ring with external toothing - 19.* Ring with internal toothing - 20.* Spacer ring. - 21.• Reverse gear - 22.• Synchroniser ring - 23.• Gear.

* Transmission without synchronised reverse
• Transmission with synchronised reverse

Figure 58

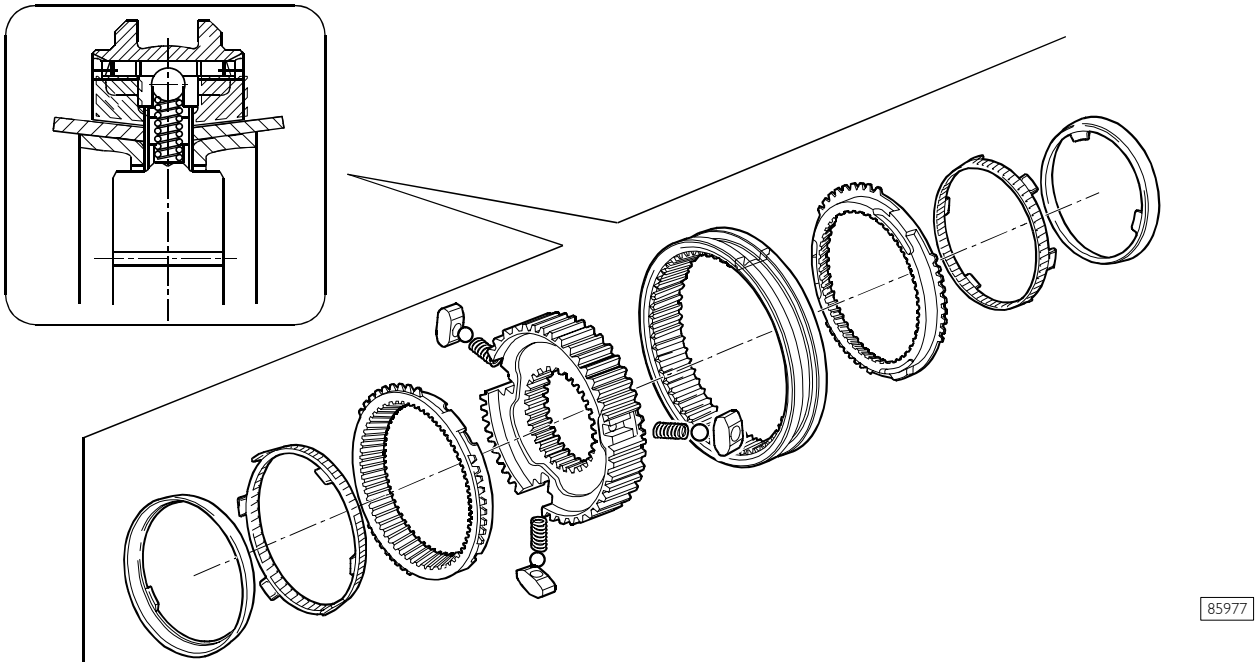

1ST-2ND GEAR DUAL CONE SYNCHRONIZER ASSEMBLY

Figure 59

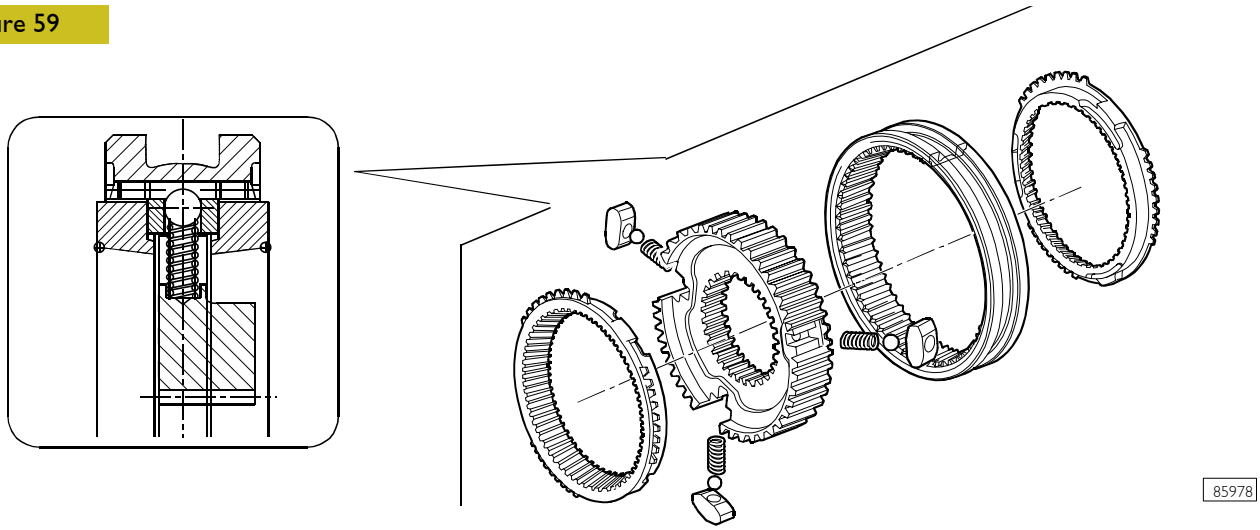

3RD - 4TH - 5TH - 6TH GEAR SINGLE CONE SYNCHRONIZER ASSEMBLY

Figure 60

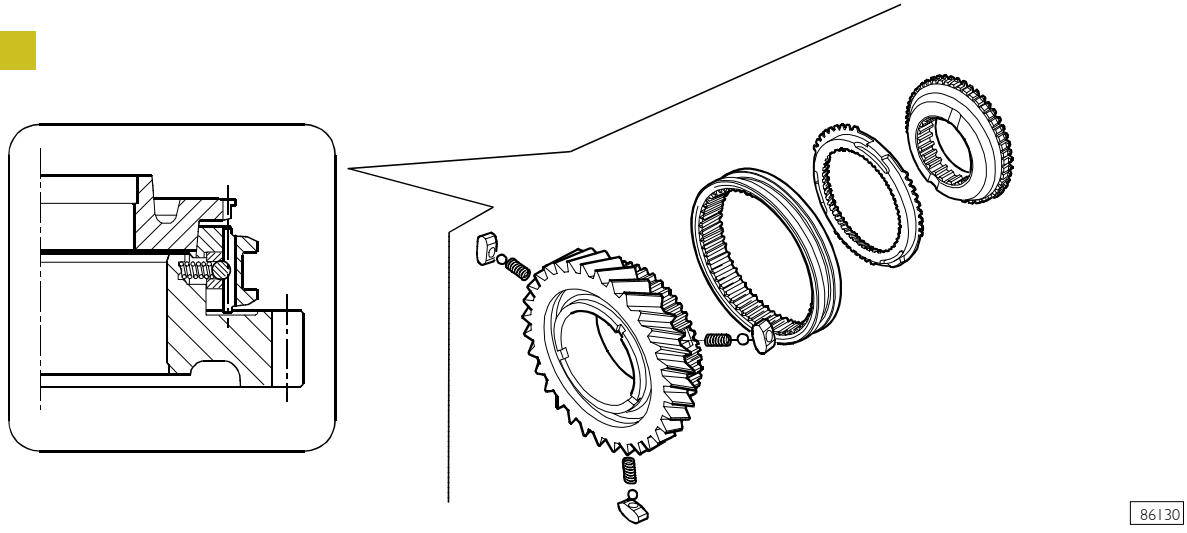

SINGLE CONE SYNCHRONIZER ASSEMBLY REVERSE GEAR

CHECKS

Transmission

The transmission and relative covers must show no sign of cracking.
The mating surfaces of the covers and transmission must not be damaged or deformed. Remove any remains of sealant from them.

The seats of the bearings, reverse gear shaft and gear control rods must be neither damaged nor too worn.

Hubs - sliding sleeves - forks

The grooves on the hubs and relative sliding sleeves must not be damaged. The sliding sleeve must run freely on the hub. The plugs and balls for positioning the sliding sleeve must be neither damaged nor worn. The toothing of the sliding sleeves must not be damaged. The forks must be sound with an end float, in the radial groove of the sleeve, no greater than 1 mm.

Bearings

The roller bearings must be in perfect condition with no signs of wear or overheating. They must only be removed if they are to be replaced.

Shafts - gears

The seats on the shafts, for bearings, must be neither damaged nor worn. The toothing of the gears must be neither damaged nor worn.

Synchronizing devices

Check the wear on the synchronizer rings, proceeding as follows:

After this check, the synchronizer rings must be marked on their respective gears to avoid swapping their positions over when assembling.

❑ See that the friction surface is not undulated.

BK-type single cone synchronizers for 3rd/4th/5th/6th gears

Figure 61

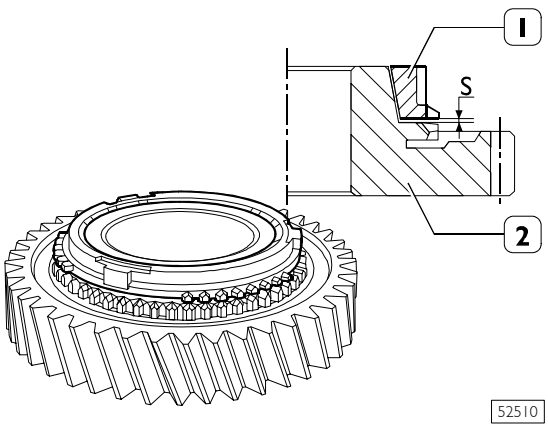

Arrange the synchroniser ring (1) on the respective gear or reverse taper ring (2).

With a feeler gauge, check the distance **S** on two diametrically opposite points.

If the measured value **S** is less than 0.8 mm, replace the synchronizer ring.

Turn the synchronizer ring (1) so as to ensure correct coupling on the cog-wheel.

D-type dual cone synchronizers for 1st/2nd gears

Figure 62

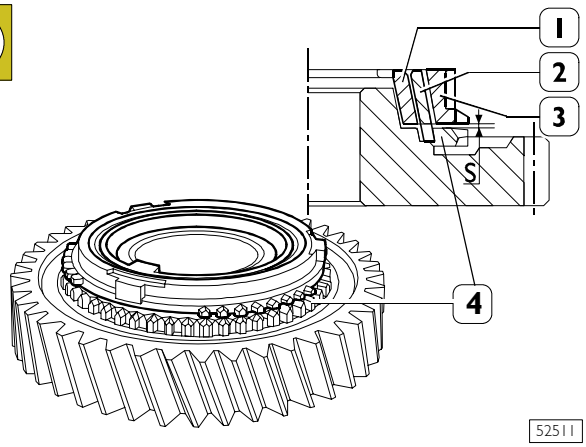

Position the internal ring (3), middle ring (2) and the synchronizer ring (1) on the tapered cog-wheel (4) of the gear.

Turn the synchronizer ring (1) so as to ensure correct coupling between the parts.

Applying a uniform force of 50 N on the synchronizer ring (1), measure the distance **S** on two diametrically opposite points with a feeler gauge.

If the average measured value **S** is less than 1.5 mm, replace all the rings.

Figure 63

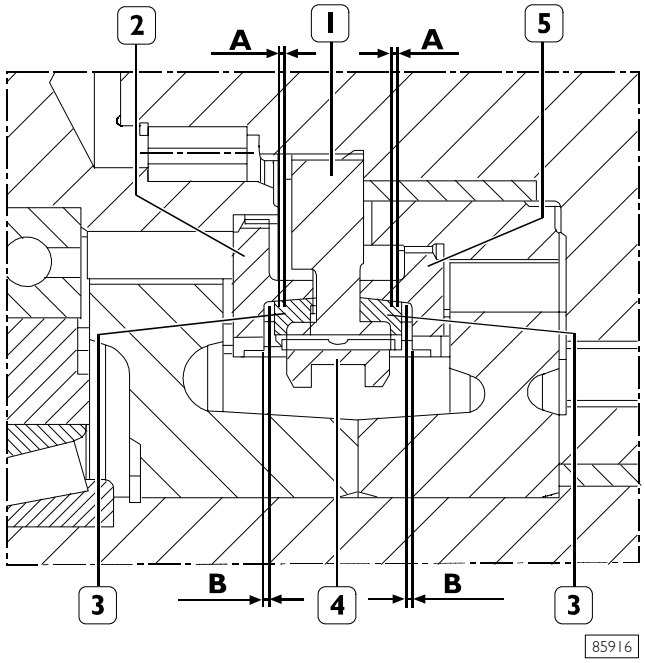

6TH/5TH GEAR SYNCHRONISERS

A. synchronization reserve 6th/5th gear: 1 ÷ 1,4 mm
B. 6th/5th release clearance: 0,3 ÷ 0,7 mm

Figure 64

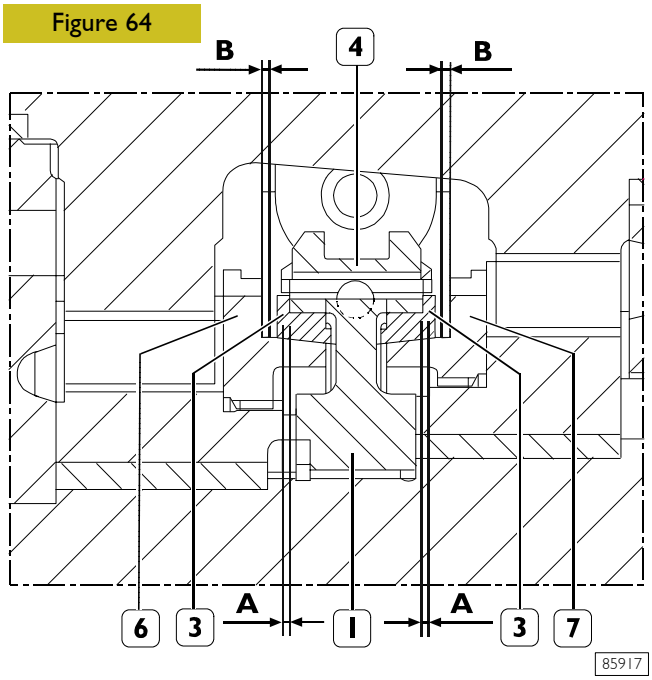

3TH/4TH GEAR SYNCHRONISERS

A. synchronization reserve 1st/2nd gear: 1 ÷ 1,4 mm
B. 1st/2nd release clearance: 0,3 ÷ 0,7 mm

Figure 65

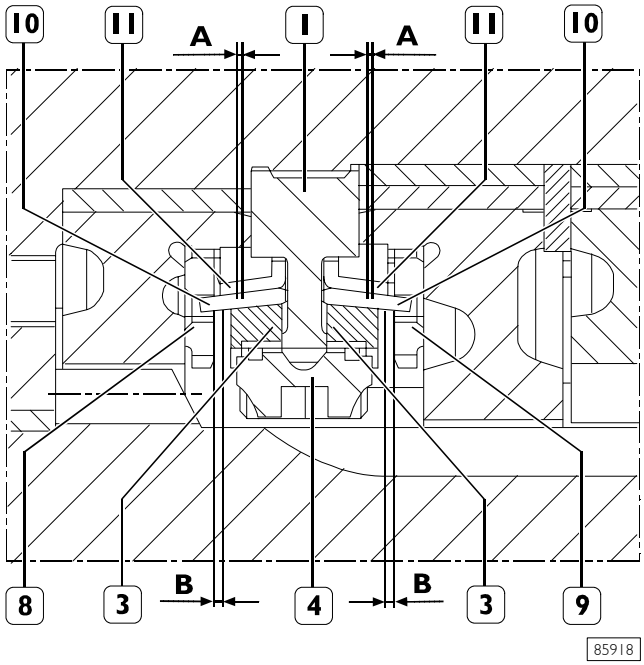

1ST/2ND GEAR SYNCHRONISERS

A. synchronization reserve 1st/2nd gear: 1,6 ÷ 2,0 mm
B. 1st/2nd release clearance: 0,9 ÷ 1,5 mm

Figure 66

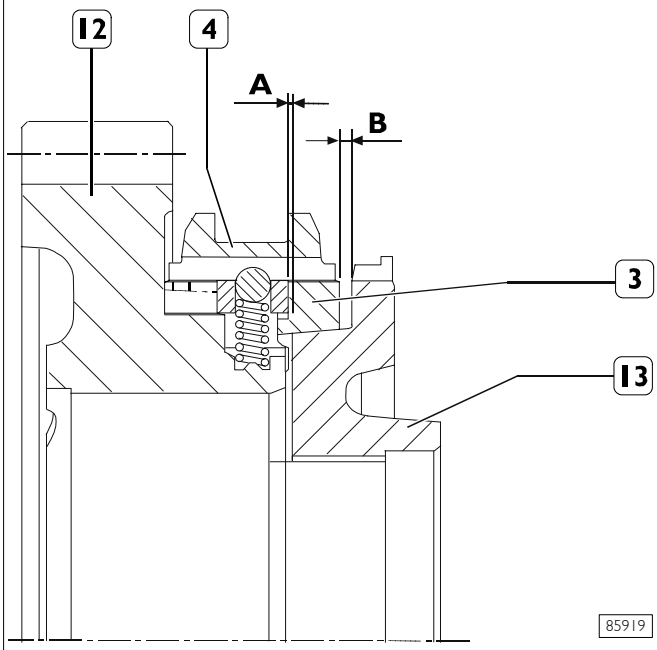

REVERSE GEAR SYNCHRONISER

A. Synchronization reserve: 0.9 ÷ 1,4 mm
B. release clearance: 0,35 ÷ 0,85 mm

1. Hub - 2. 6th gear - 3. Synchronizer ring - 4. Sliding sleeve - 5. th gear cog-wheel - 6. 3rd gear cog-wheel - 7. th gear cog-wheel - 8. 2nd gear cog-wheel - 9. Reverse gear - 10. Middle ring - 11. Ring - 12. Reverse gear - 13. Reverse gear ring

Mounting the transmission shaft

Figure 67

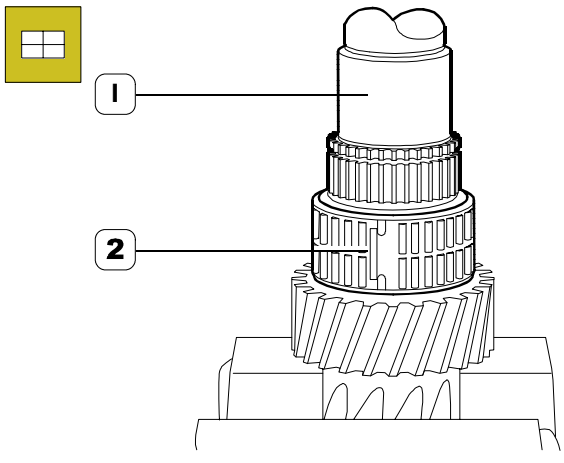

Clamp the transmission shaft (1) in a vice and position the half roller bearings (2) on it.

Figure 68

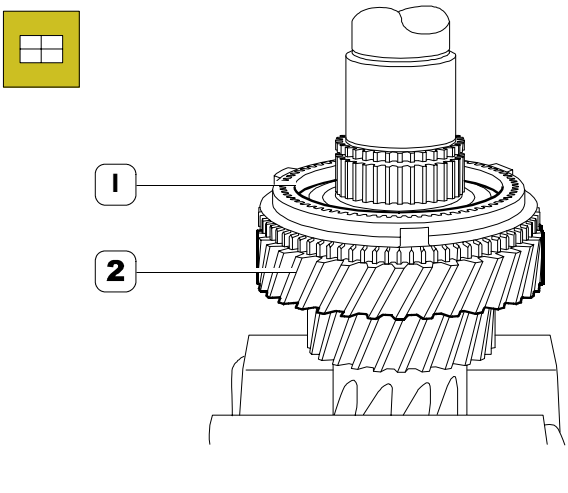

Mount the 4th gear (2) and position the synchronizer ring (1) on this.

Figure 69

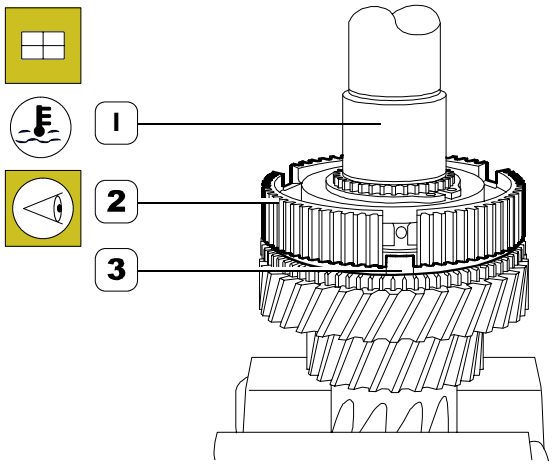

Heat the hub (2) to a temperature of 110° ÷ 150°C and mount it on the transmission shaft (1), taking care that the protrusions (3) of the synchronizer ring are positioned correctly in their seats in the hub (2).

Figure 70

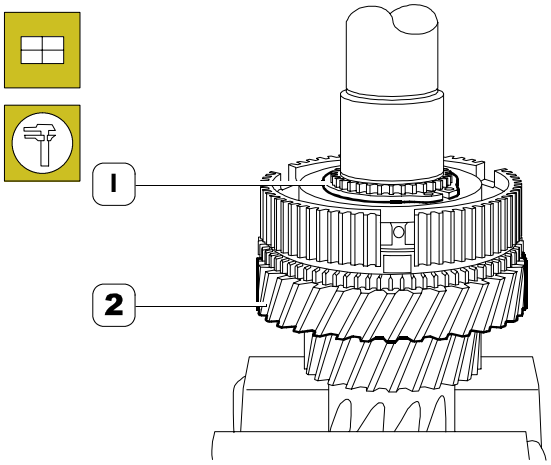

Mount the retaining ring (1) whose thickness produces null end float in its seat.

Check the end float of the 4th gear (2). It should be 0.15 ÷ 0.40 mm.

Figure 71

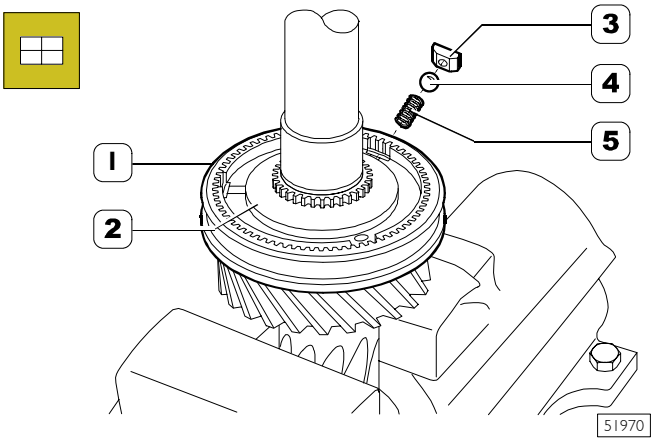

Mount the sliding sleeve (1) on the hub (2). Put the springs (5), plugs (3) and balls (4) into the seats in the hub (2), settling them under the sliding sleeve (1).

Figure 72

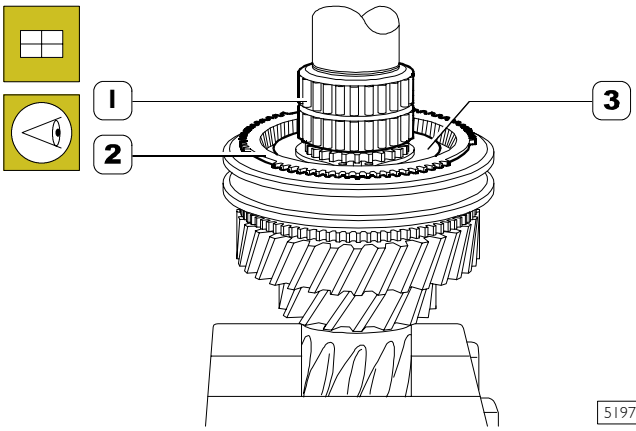

Position the synchronizer ring (2) on the hub (3) so that its protrusions enter the seats in the hub (3). Mount the roller bearing (1).

Figure 73

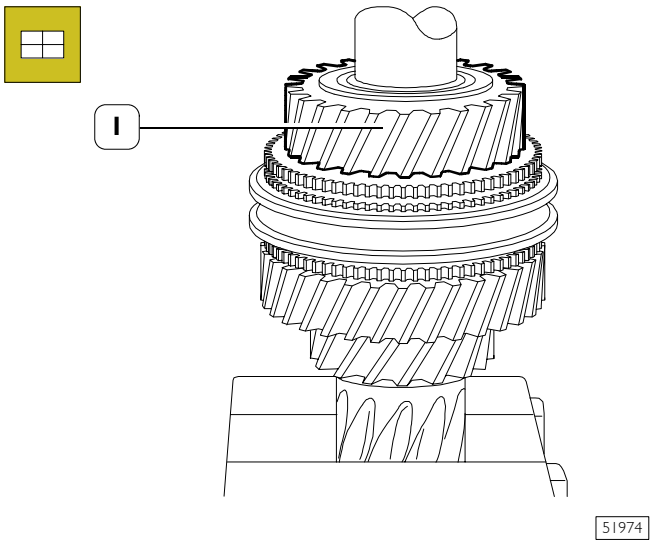

Mount the 3rd gear (1).

Figure 74

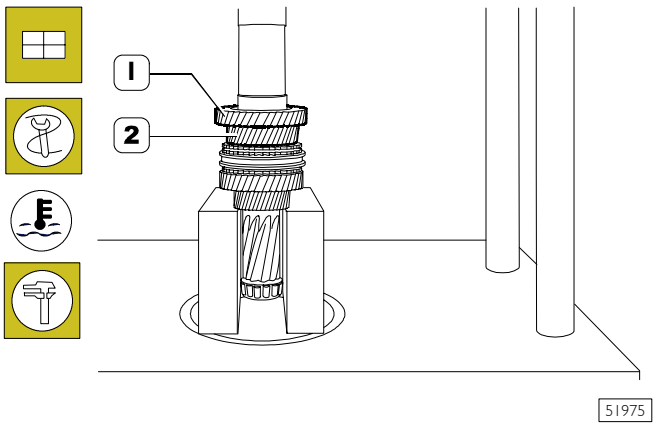

With a hydraulic press, mount the 5th gear (1) pre-heated to approx. 170°C.

Check the end float of the 3rd gear (2). It should be 0.15 ÷ 0.40 mm.

Figure 75

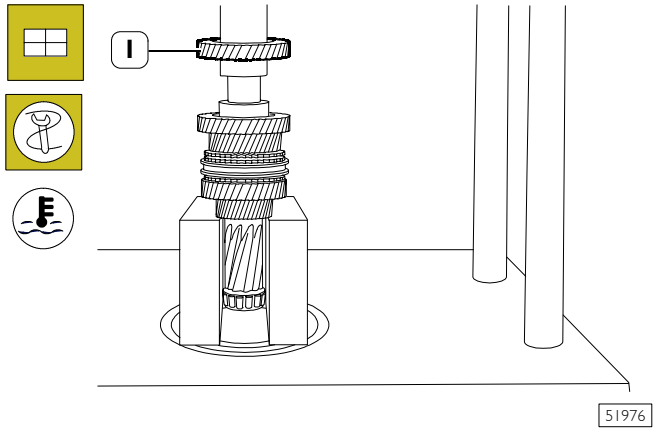

With a hydraulic press, mount the 6th gear (1) pre-heated to approx. 170°C.

Figure 76

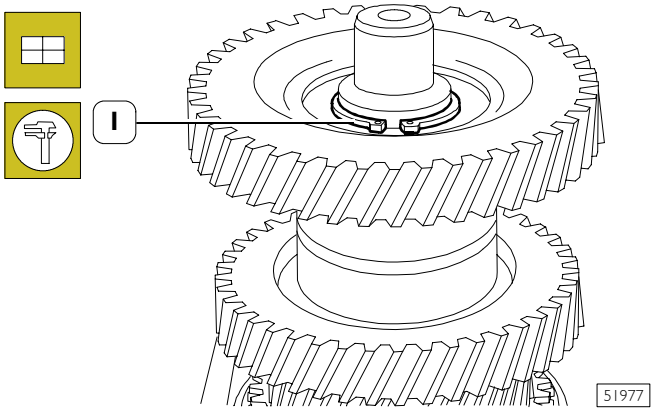

Mount the retaining ring (1) whose thickness produces null end float in its seat.

Figure 77

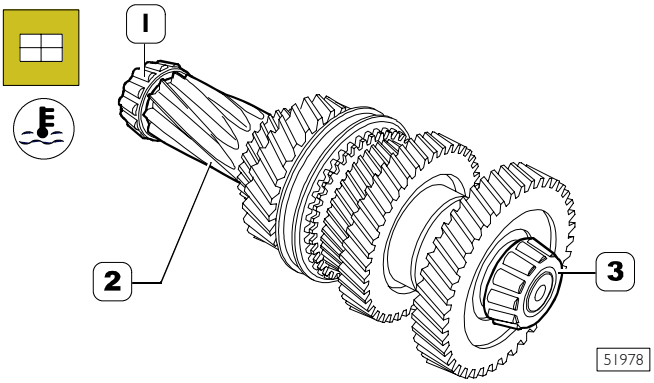

Heat the internal rings (1 - 3) of the tapered roller bearings to a temperature of approx. 80°C and, with a suitable punch (1), mount them on the transmission shaft (2).

Mounting the main shaft

Mount the synchronizer rings on their respective gears according to the marks made during disassembly or when checking in the case of replacement.

Figure 78

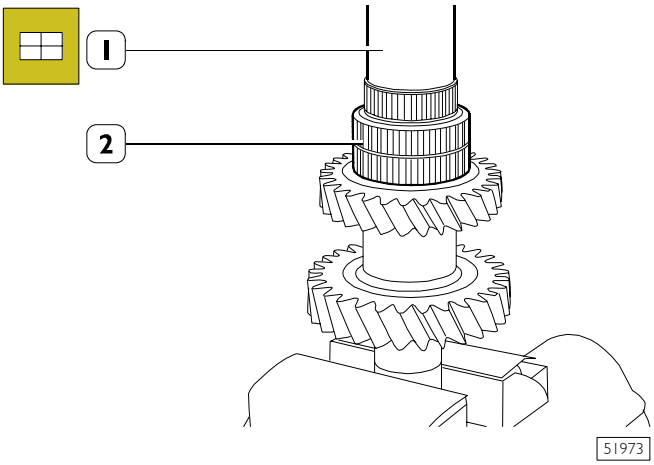

Tighten the main shaft (1) and position the roller bearing (2) on it.

Figure 79

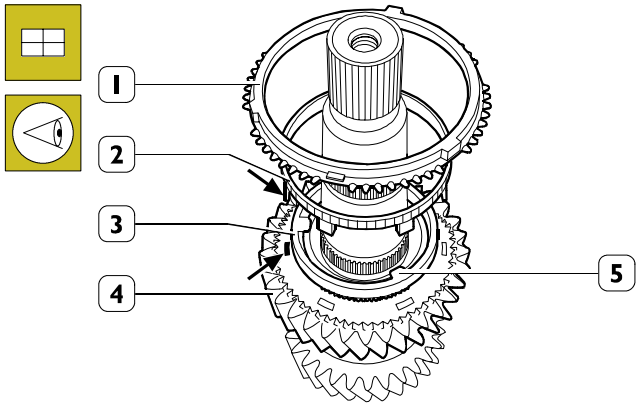

51980

Mount the 2nd gear (4) and position the ring (3), middle ring (2) and synchronizer ring (1) on it, taking care that the tongues (→) of the middle ring (2) enter the slots (→) in the gear (4).

Figure 80

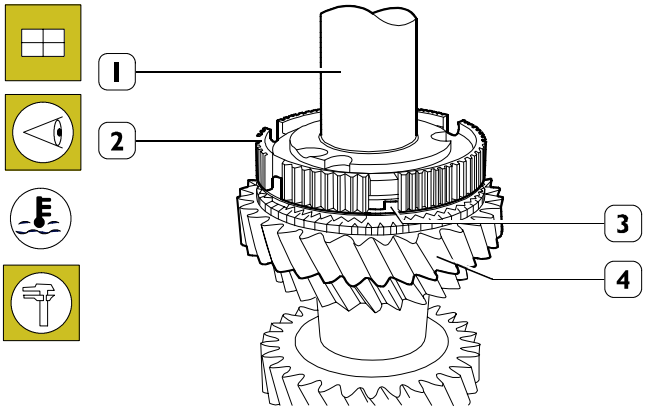

51981

Heat the hub (2) to a temperature of 80° ÷ 110°C and mount it on the main shaft (1), taking care that the projections (3) of the synchronizer ring and the tongues (→) of the ring (3, Figure 79) are positioned correctly in the seats in the hub (2).

Check the end float of the gear (4). It should be 0.25 ÷ 0.5 mm.

Figure 81

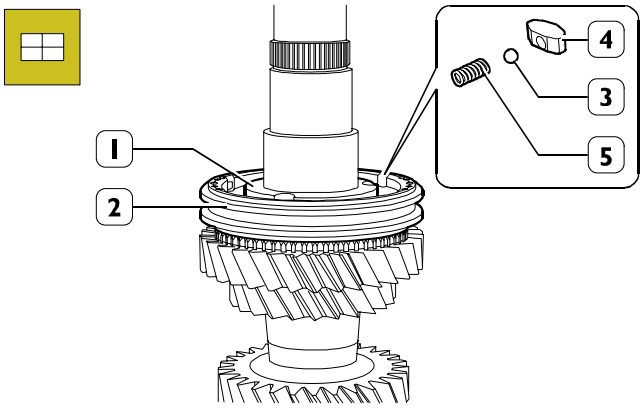

51982

Mount the sliding sleeve (2) on the hub (1). Put the springs (5), plugs (4) and balls (3) into the seats in the hub (1), settling them under the sliding sleeve (2).

Figure 82

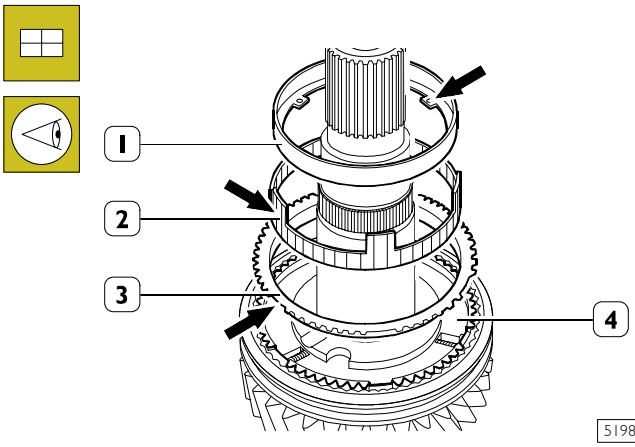

51983

Position the synchronizer ring (3), middle ring (2) and ring (1) on the hub (4), taking care that the tongues (→) of the ring (1) and the projections (→) of the ring (3) enter the seats in the hub (4).

Figure 83

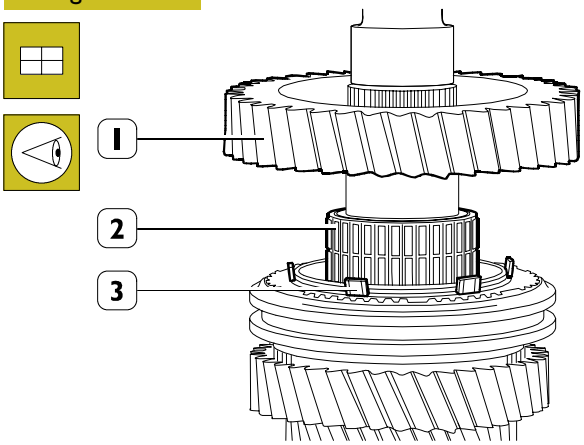

51984

Position the roller bearing (2). Mount the 1st gear (1) taking care that the tongues (3) of the middle ring enter the slots in the gear (1).

Figure 145

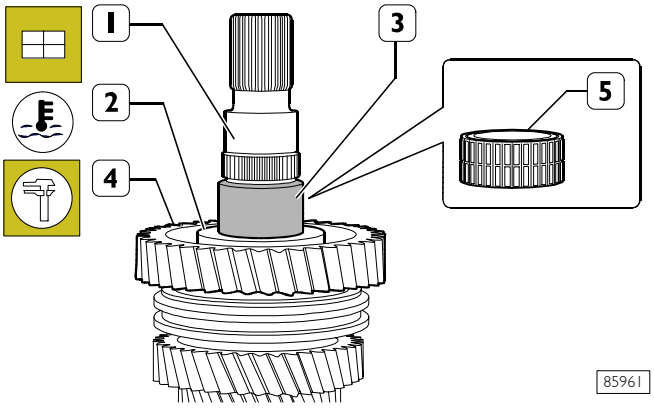

Heat the spacer ring (2) to a temperature of approx. 80° ÷ 110°C and mount it on the main shaft (1). Check the end float of the gear (4); this should be 0.15 ÷ 0.3 mm.
Heat the bushing (3) to a temperature of approx. 80° ÷ 110°C and mount it on the main shaft (1).
Mount the roller bearing (5).

For transmission without synchronised reverse, proceed as follows

Figure 146

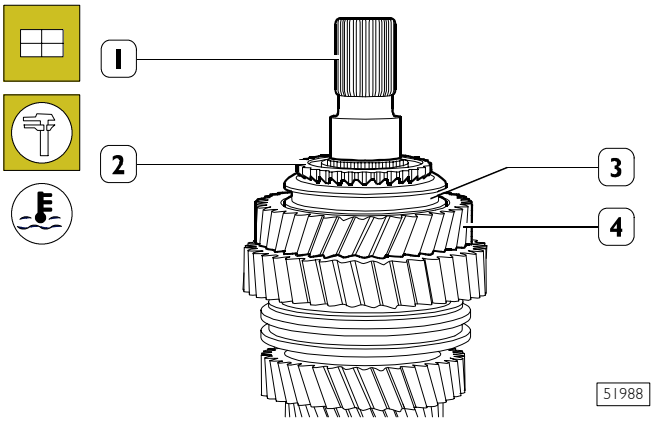

Mount the reverse gear (4), heat the hub (2) to a temperature of 80° ÷ 110°C and mount it on the main shaft (1). Check the clearance of the gear (4); it should be 0.15 ÷ 0.4 mm.

Mount the sliding sleeve (3).

Figure 147

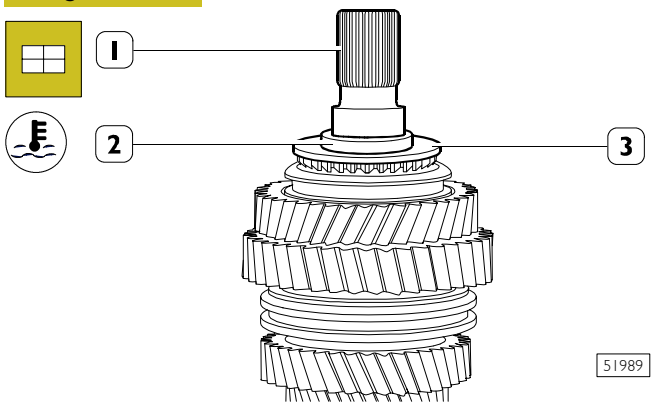

Heat the ring with internal toothing (3) and the spacer ring (2) to a temperature of 80° ÷ 110°C and mount them on the main shaft (1).

For transmission with synchronised reverse, proceed as follows

Figure 148

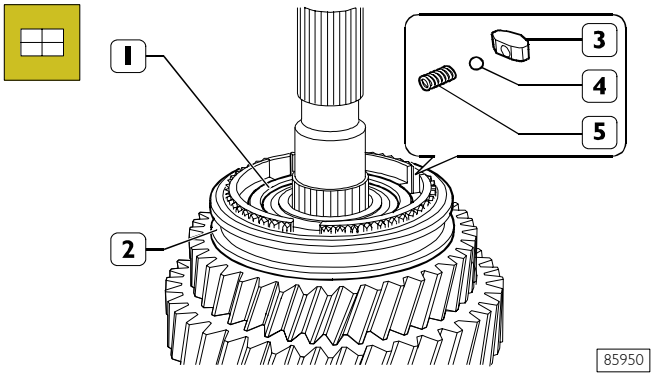

Fit reverse gear (1).
Fit sliding sleeve (2) on reverse gear hub (1).
Insert the springs (5), the pads (3) and the balls (4) in the hub seats (1) and arrange them with respect to the sliding sleeve (2).

Figure 149

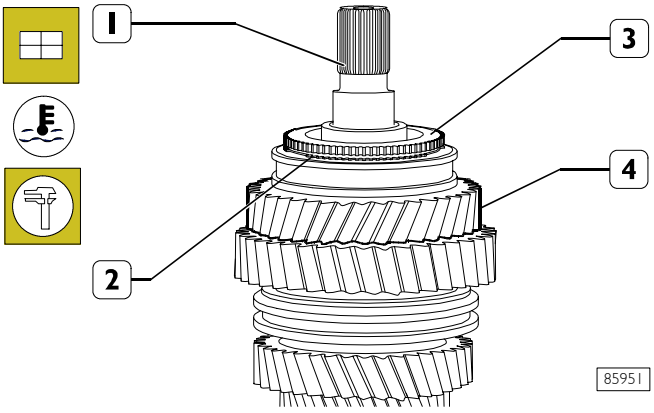

Fit the synchroniser ring (2).
Heat the gear ring (3) to 110° ÷ 150° and fit on primary shaft (1).
Check reverse gear play (4) which must be 0.15 ÷ 0.4 mm.

Figure 150

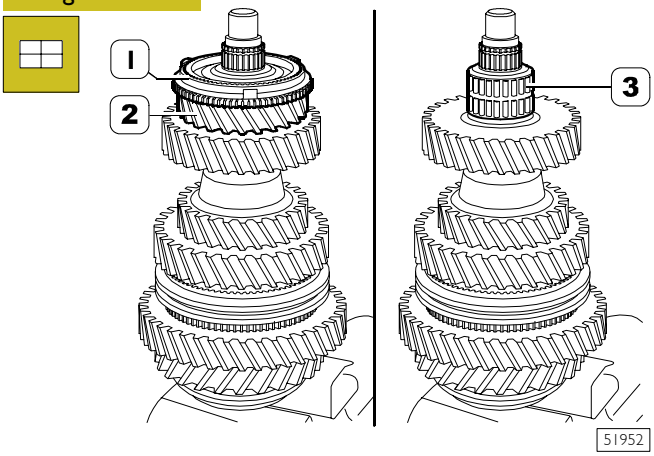

Turn the main shaft over and position the half roller bearings (3) on it.
Mount the 5th gear (2) and position the synchronizer ring (1) on it.

Figure 90

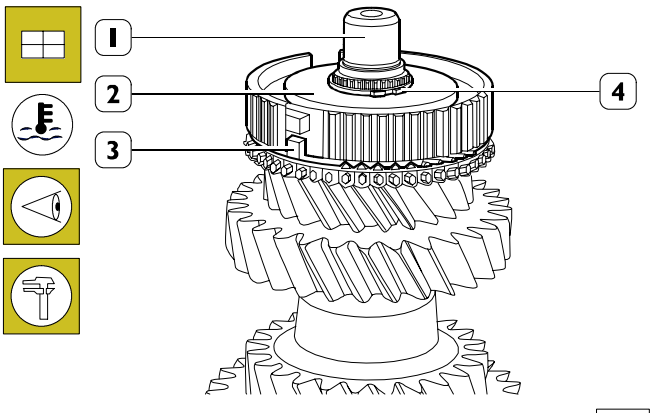

51990

Heat the hub (2) to a temperature of approx. 80° ÷ 110°C and mount it on the main shaft (1) taking care that the projections (3) of the synchronizer ring are positioned in the seats in the hub (2).

Mount the retaining ring (4) whose thickness produces null end float in its seat.

Figure 91

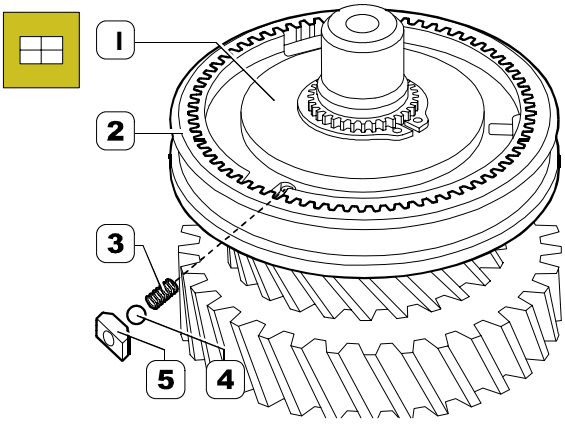

51991

Mount the sliding sleeve (2).

Put the springs (3), plugs (5) and balls (4) into the seats in the hub (1) and position them under the sliding sleeve (2).

Figure 92

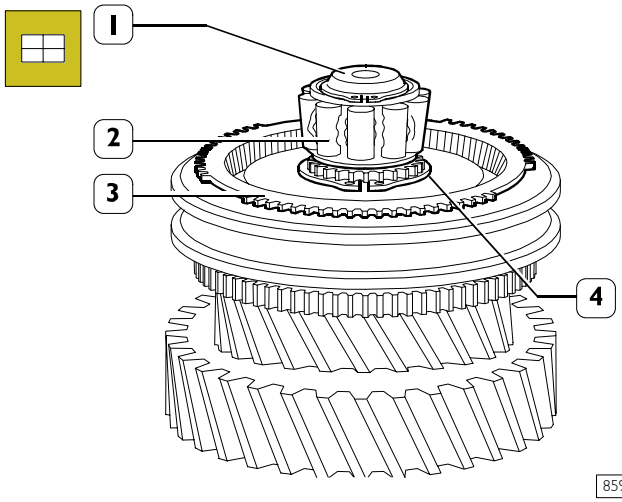

85952

Heat the bearing (2) to 80° ÷ 110°C and fit on primary shaft (1). Fit the circlip (4) and synchroniser ring (3).

Rods - forks - selector - driver Disassembly - assembly

Figure 93

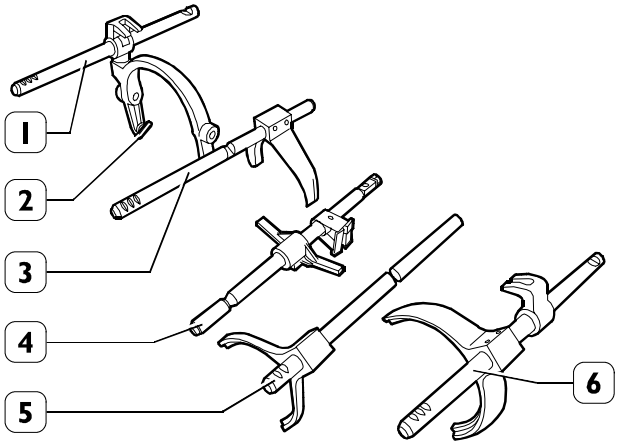

51992

1. Rod with 3rd/4th gear engagement fork - 2. Plugs - 3. Rod with 5th/6th gear engagement fork - 4. Main rod - 5. Rod with reverse gear engagement fork - 6. Rod with 1st/2nd gear engagement fork.

Check the state of the plugs (2) of the 3rd/4th gear engagement fork and replace them if they are worn.

To replace the forks of the selector and driver from their respective control rods it is sufficient to remove the retaining spring pins with a suitable punch.

For assembly, carry out these steps in reverse order, replacing the spring pins.

Mounting the transmission

During assembly, the gaskets, retaining rings, O-rings, spring pins, safety plates and springs must always be replaced with new parts.
The nuts and screws must be tightened to the required torque unless specified otherwise, with the thread dry and degreased.

Adjusting the transmission shaft bearing end float

The transmission shaft bearing end float is only adjusted if the bearings, transmission shaft gears, transmission shaft, transmission or rear cover have been replaced or if too much clearance has been found.

Figure 94

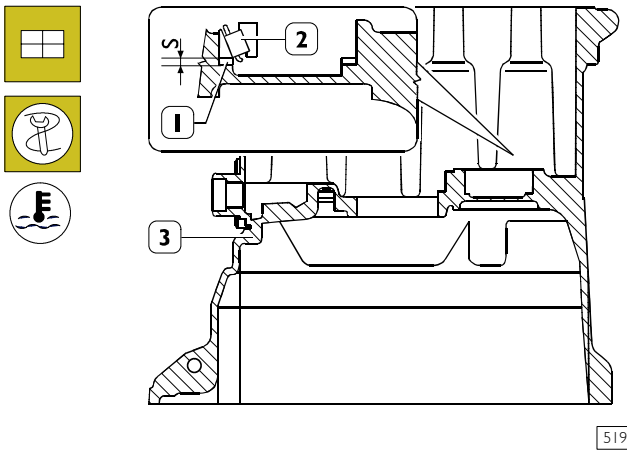

Determine the thickness **S** of the ring (1) for adjusting the transmission shaft bearing end float, proceeding as follows:

- ❑ position the thinner adjustment ring (1) 1.65 mm thick in the seat in the transmission (3);
- ❑ heat the seat of the bearing (2) to approx. 60°C. Mount the external ring of the bearing (2) with the punch 99374091 and grip 99370007, see Figure 96;
- ❑ mount the transmission shaft complete with the internal rings of the tapered roller bearings;
- ❑ mount the external ring of the rear bearing in the rear cover in a similar manner to the front one (see Figure 97);
- ❑ mount the rear cover on the transmission;
- ❑ screw on the 8 fixing screws so that between one screw and another there is a hole for a free screw and tighten them to the required torque;
- ❑ turn the transmission shaft to settle the bearings;

Figure 95

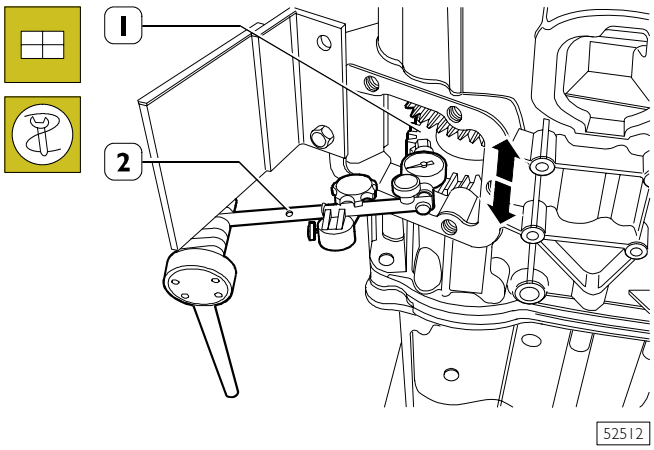

- ❑ using a comparator (2) zeroed on the 5th gear toothing of the transmission shaft (1) measure its end float **A** through the opening for the power take-off connection and note it down.

The thickness **S** is given by:

S = A + B + C

Where:

A = measured end float, e.g. 0.18 mm;

B = average bearing pre-load, e.g. 0.02 mm;

C = adjustment value used for the measurement 1.65 mm;

S = 0.18 + 0.02 + 1.65 = 1.85 mm

Then mount the rear cover, transmission shaft and external ring of the front bearing.

Figure 96

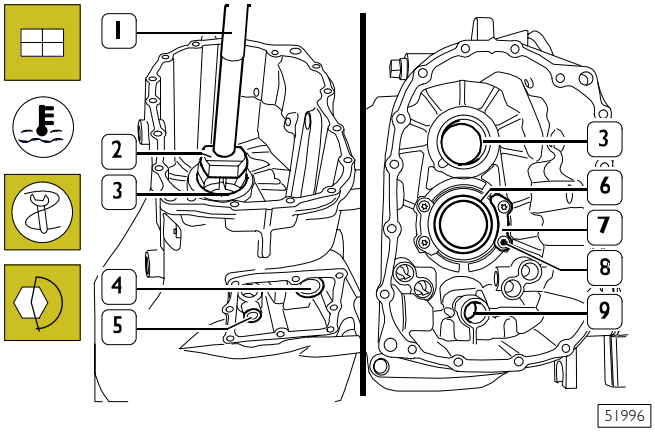

Position the adjustment ring (1, Figure 94) of the thickness determined with the above measurement. Heat the bearing seats of the box to a temperature of approx. 80°C and mount:

- ❑ the external ring (3) of the front tapered roller bearing with punch 99374091 (2) and grip 99370007 (1);
- ❑ the ball bearing (6) with a general punch;
- ❑ the bushing with ball bearing (9) and the roller bearings (4-5) with a general punch.

Position the retaining plates (7) and secure them to the box, tightening the screws (8) to the required torque.

Figure 97

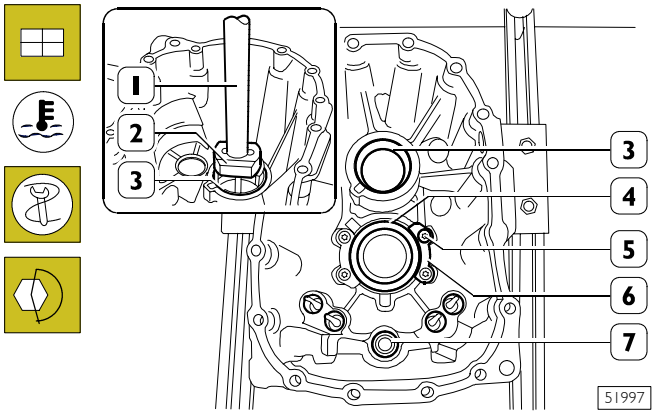

Heat the bearing seats of the rear cover (1) to a temperature of approx. 80°C and mount:

- ❑ the external ring (3) of the tapered roller bearing with punch 99374091 (2) and grip 99370007 (1);
- ❑ the ball bearing (4) and the bushing with ball bearings (7) with a general punch.

Position the retaining plates (6). Secure these to the rear cover, tightening the screws (5) to the required torque.

Figure 98

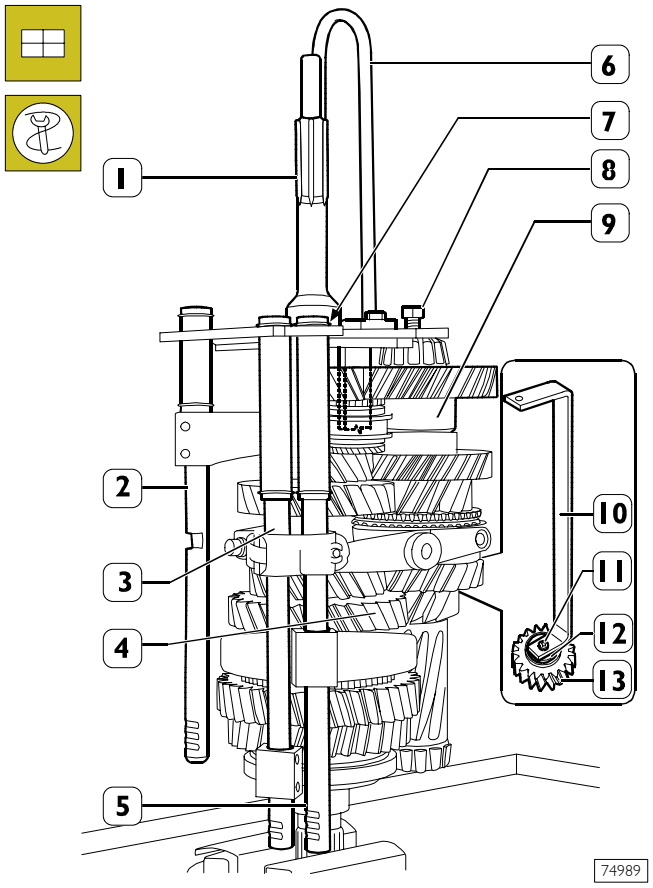

Clamp the main shaft in a vice (4).
Tighten the primary shaft (4) in a vice. Fit tool 99360522 (6) on the input transmission shaft (1) and fasten with the circlip (7).
Couple the secondary shaft (9) to the primary shaft (4) and fasten by tightening the screw (8) on the tool (6).
Fit the 3rd/4th gear engagement fork (14) onto the respective sliding sleeve.
Position the forks with their rods (2 - 3 - 5) on the sliding sleeves and secure them with the sleeves of tool 99360522 (6).
Couple the reverse gear (13) with the shafts (4 and 9) and fasten it to them with the part (12) of the bracket (10) tighten the screw (11).

Figure 99

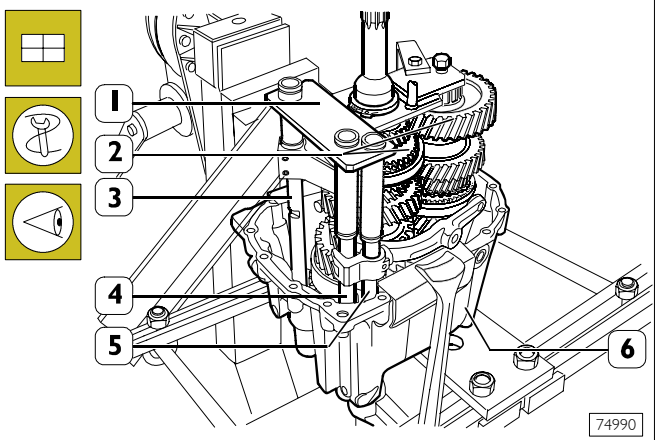

Hook hoist to tool 99360522 (1), lift the unit (2) as previously mounted, and partially insert it into the rear cover (6).

During this operation, check that the output shaft goes into the supporting ball bearing and the control rods (3 -4 - 5) go into their respective seats.

Figure 100

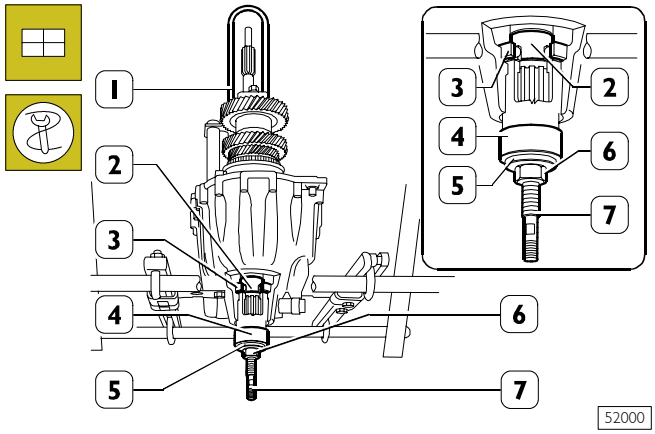

Screw tool 99370234 pin (7) into output shaft hole (2) and fit bushing (4) and spacer (5) on tool.

Screw on the nut (6) and at the same time lower the hoist so the output shaft (2) is positioned on the rear ball bearing (3).

Remove tools 99360522 (1) and 99370234 (4-5-6-7).

Figure 101

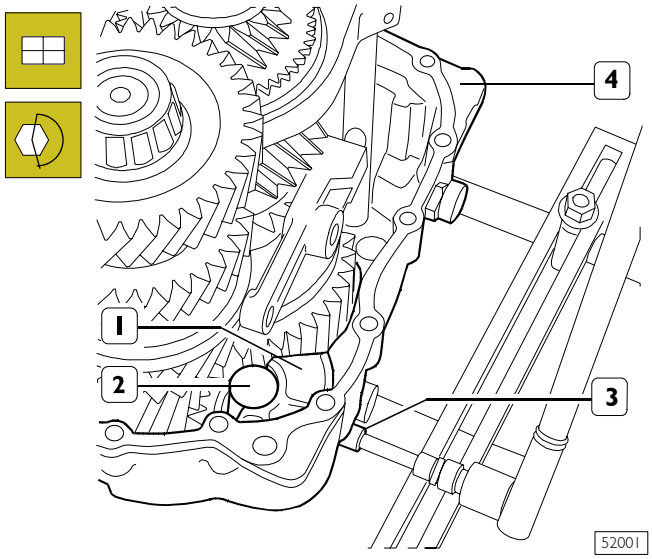

Place the roller bearings in the reverse gear.

Mount the spindle (2) and the mounting (1) so that the relevant holes for the fixing screw are aligned with the relevant hole of the rear cover (4).
Screw down the screw (3) fixing the spindle (2) and mounting (1) to the rear cover (4) and tighten it to the prescribed torque.

Figure 102

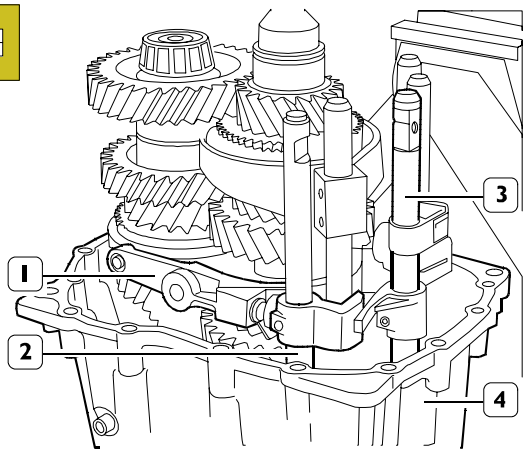

Mount the 3rd/4th gear control rod (2) in the rear cover (4), connecting it to the relative fork (1), and the main rod (3).

Figure 103

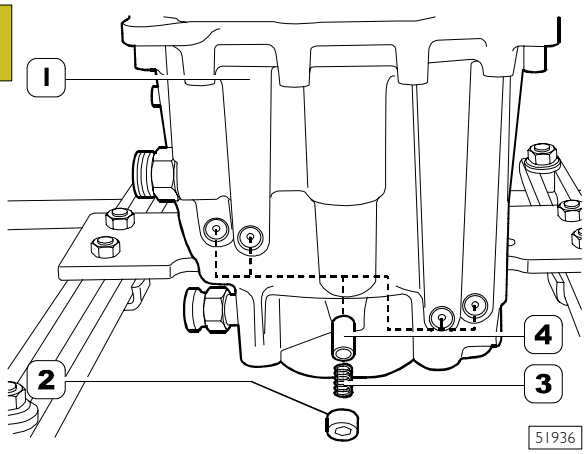

Put the pawls (4) and springs (3) in the rear cover (1) and drive in the retaining cups (2) with a suitable punch.

Figure 104

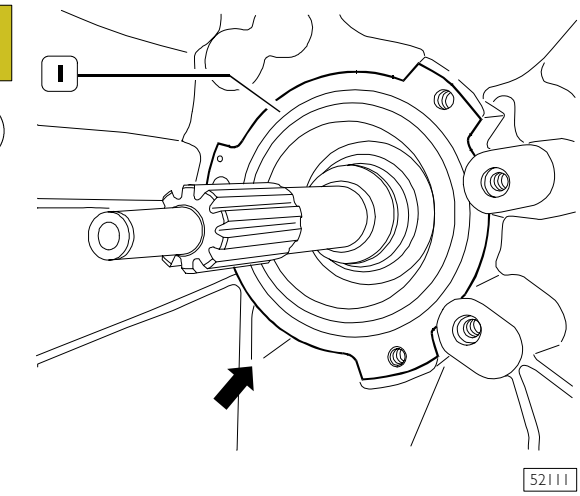

Heat (approx. 60°C) the transmission (1) by the seat (→) of the ball bearing and mount it on the rear cover.

When mounting the transmission, check that the shafts and control rods are positioned correctly in their respective seats and that the rod (2, Figure 102) stays connected to the 3rd/4th gear engagement fork (1).

Figure 105

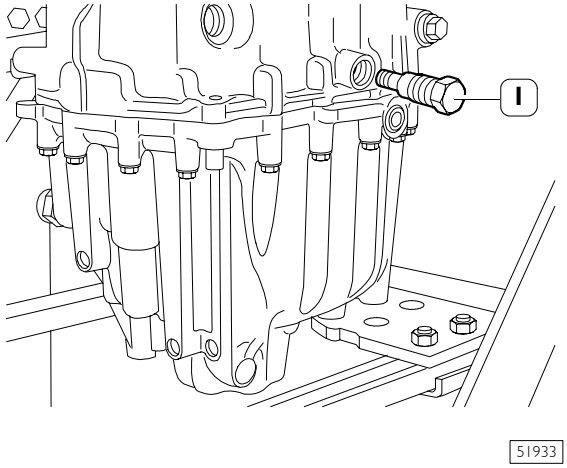

Apply LOCTITE 242 to the thread of the pins (1).

Screw the pins (1) into the box, checking that their ends go into the hole of the 3rd/4th gear engagement fork link (1, Figure 102) and then tighten them to the required torque.

If during these assembly operations the fork (1, Figure 102.) comes free of the control rod, it will not be possible to mount the pins (1) until they have been reconnected.

Figure 106

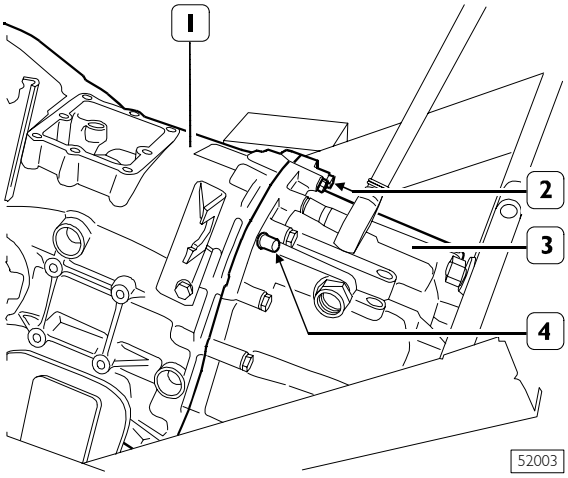

Screw on the screws (2) securing the rear cover (3) to the transmission (1) without fully tightening them.

Mount the centring pins (4) in the rear cover (3) and in the transmission (1).

Tighten the screws (2) to the required torque.

Figure 107

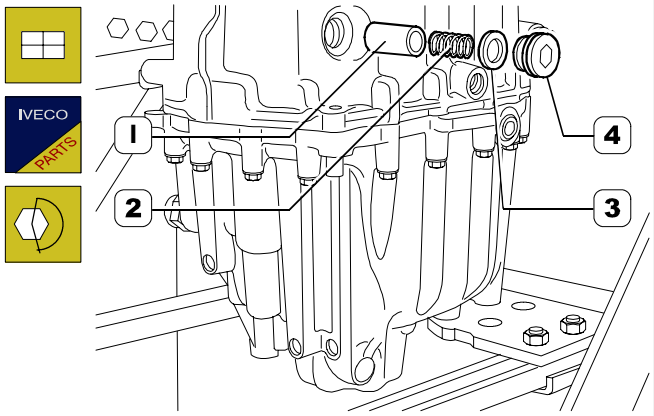

Mount the push rod (1) and the spring (2). Screw on the plug (4) with a new washer (3), tightening it to the required torque.

Figure 108

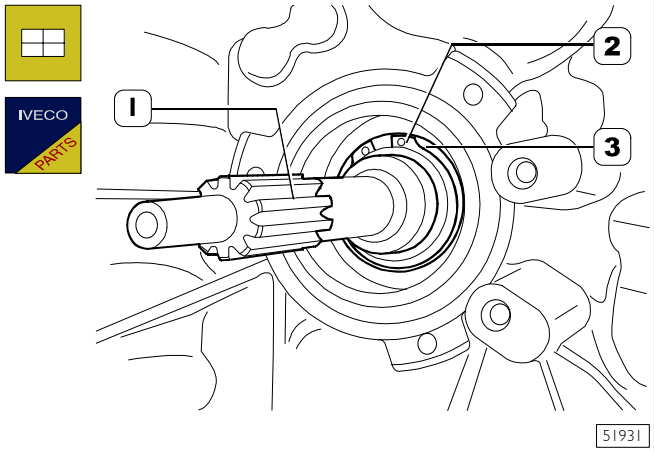

Fit a new retaining ring (2) securing the front bearing (3) onto the input shaft (1).

Figure 109

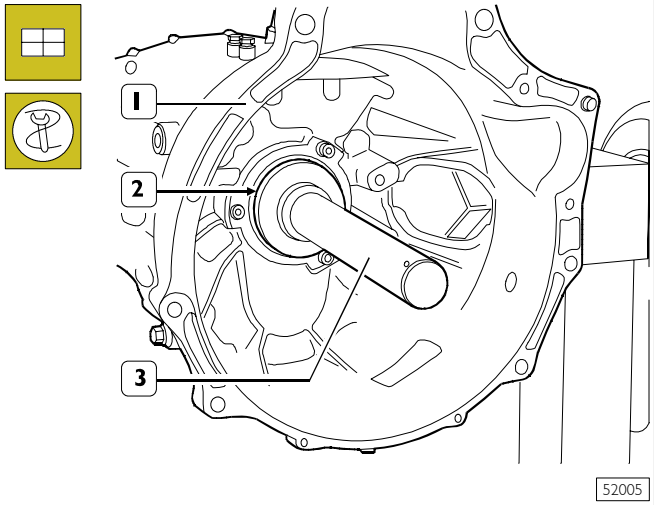

Using the key 9937455 (3), mount the O-ring (2) in the transmission (1).

Figure 110

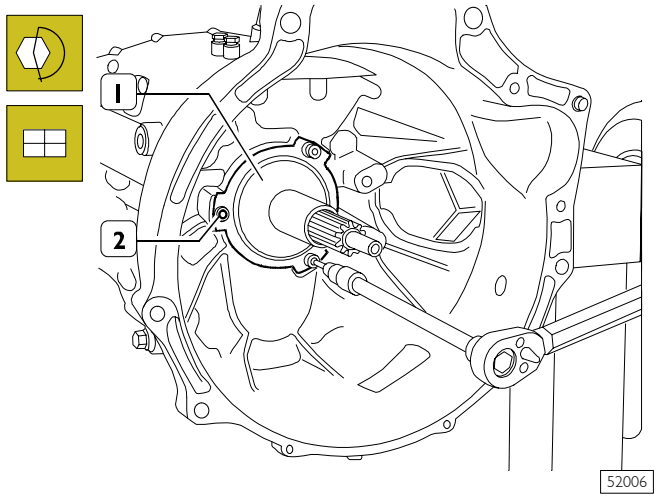

Mount the cover (1) protecting the input shaft and tighten the screws (2) to the required torque.

Figure 111

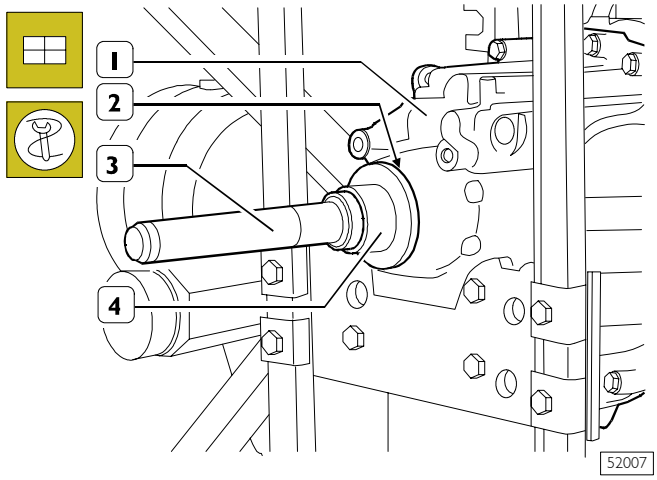

Mount the O-ring (2) in the rear cover (1) with the key 99374454 (4) and the grip 9937006 (3).

Figure 112

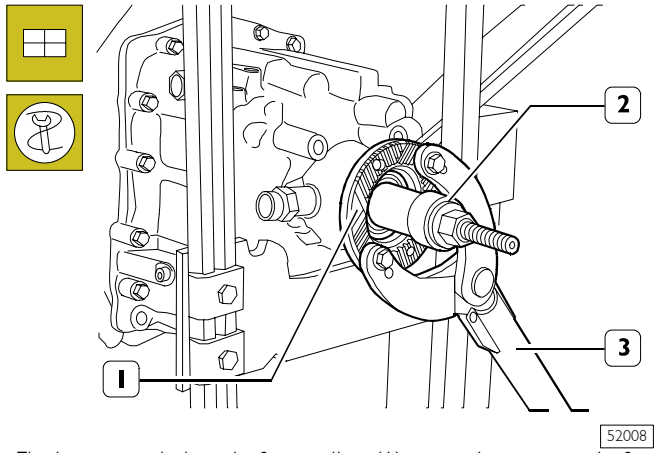

Fit the transmission shaft coupling (1) onto the output shaft.

If there is any interference, use the tool 99370234 (2) for assembly with the lever 99370317 (3) to lock the coupling.

Figure 113

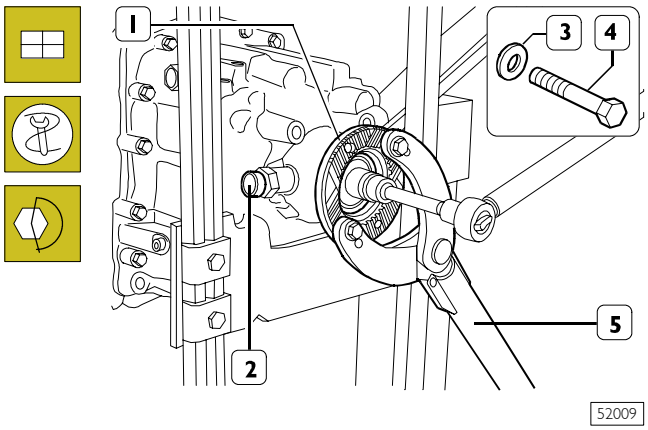

Mount the washer (3) and screw on the screw (4).

Lock the rotation of the flange (1) with the lever 99370317 (5) and tighten the screw (4) to the required torque.

Mount the tachograph sensor (2) and the reversing light switch.

Figure 114

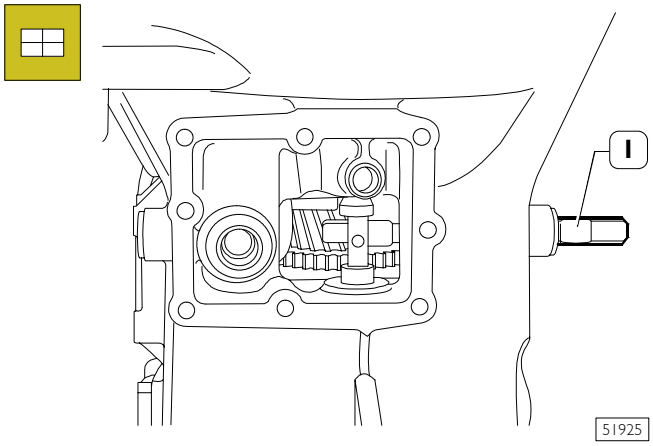

Mount the rod (1) preventing engagement of more than one gear at the same time, in the position marked during disassembly.

Figure 115

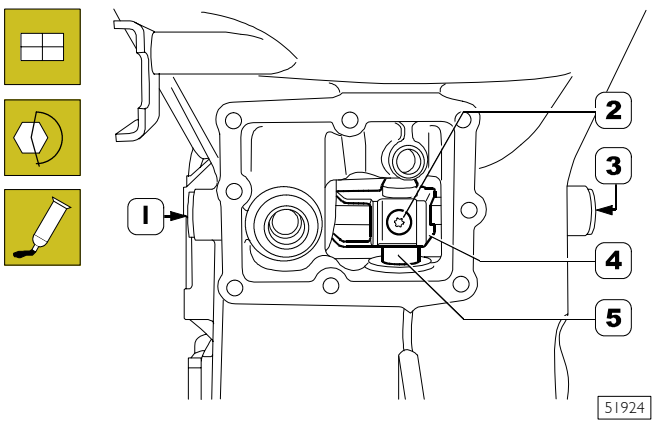

Apply sealant to the thread of the plugs (1 - 3), screw them into the box, tightening them to the required torque.

Position the driver (4) on the rod (5).

Secure it with the screw (2) after applying LOCTITE 242 onto its thread.

Figure 116

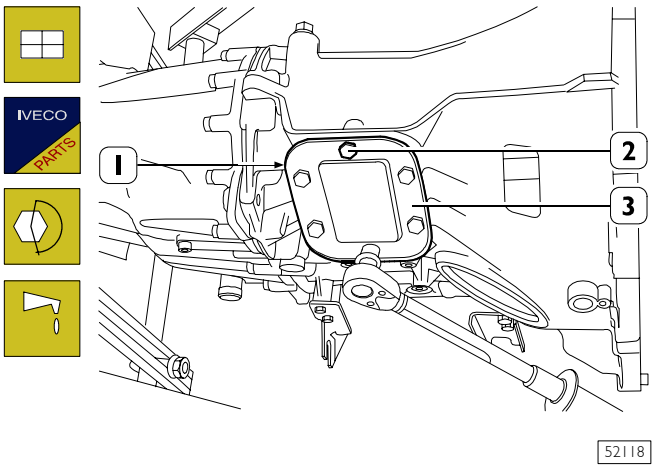

Fit a new gasket (1) onto the transmission.

Mount the side cover (3) and tighten the fixing screws (2) to the required torque.

Mount the control box as described under the relevant heading.

Mount the oil drainage plug, tightening it to the required torque.

Fill the transmission with lubricating oil in the required quantity and grade.

Mount the oil filler and level indicator cap, tightening it to the required torque.

Power take off

Page

SPECIFICATIONS AND DATA 79

TIGHTENING TORQUES 80

ASSEMBLY STANDARDS 81

POWER TAKE OFF ELECTRIC ACTUATOR . . 82

❑ Description 82

❑ Operation 82

SPECIFICATIONS AND DATA

TYPE	Hidrocar 20Z1	Hidrocar 20 Z2
Application	**5 S 200**	**6 S 300**
Gear ratio I, PTO(*) output revs., normal PTO(*) input revs.	I	0.910
PTO(*) output rated torque at 1500 rpm (Nm)	120	180
Expected duration at rated torque and at 1500 rpm hours	500	
Rotation direction (with respect to engine)	Opposite	
Control	Electric	
Assembly side (with respect to running direction)	Left side	
Torque obtainable from gearbox (Nm)	175	303
Oil capacity (litres)	~ 0.6 ÷ 0.4	

(*) = Power Take Off

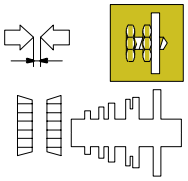	Drive gear taper roller bearing axial backlash	0 ÷ 0.1 mm
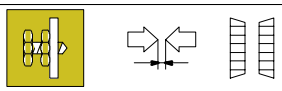	Drive gear taper roller bearing axial backlash adjustment	by shims
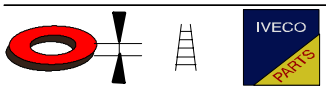	Drive gear taper roller bearing axial backlash adjusting ring thickness	0.1 - 0.2 - 0.3 - 0.5 mm

Figure 1

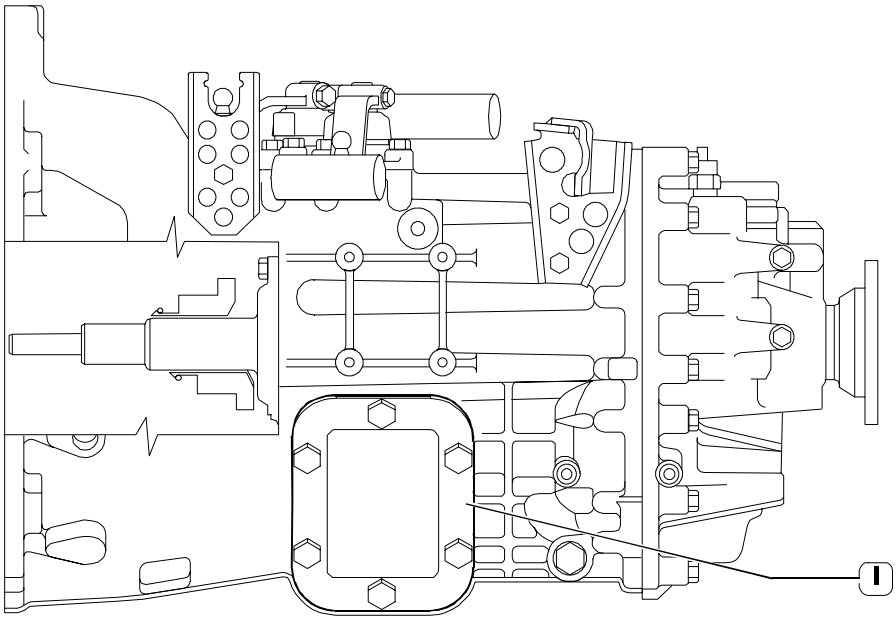

Power take offs are applied to secondary shaft on gearbox left side instead of cover (1).

Fill and check gearbox oil level.

TIGHTENING TORQUES

Figure 2

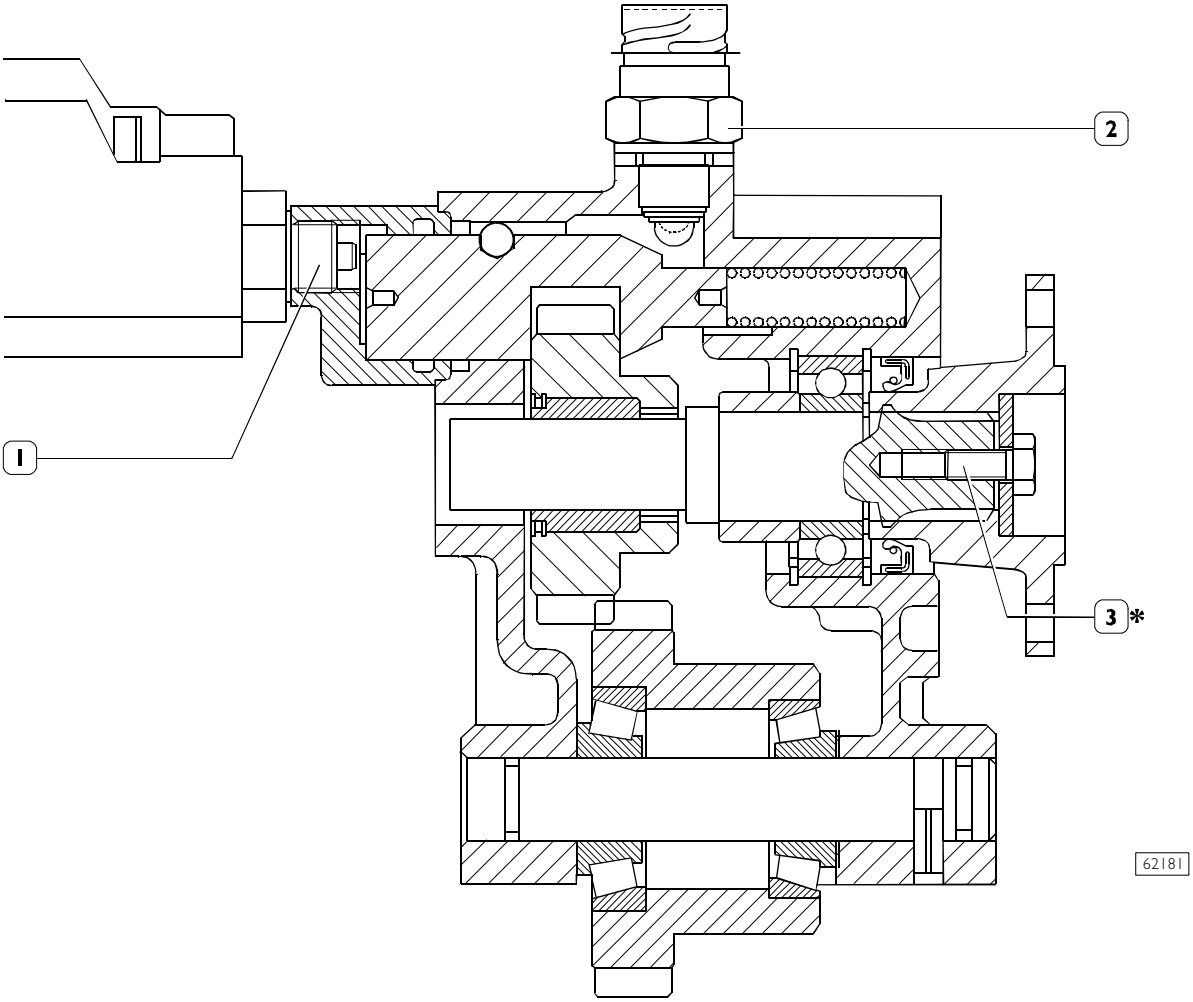

	DESCRIPTION	TORQUE	
		Nm	kgm
1	M16x1.5 actuator fixing tang	50	5
2	Switch fixing	50	5
3*	Flange fixing screw	25	2.5
-	M10 nuts for fixing PTO to gearbox	35 ÷ 39	3.5 ÷ 3.9

* Smear screw thread with LOCTITE 242

Figure 3

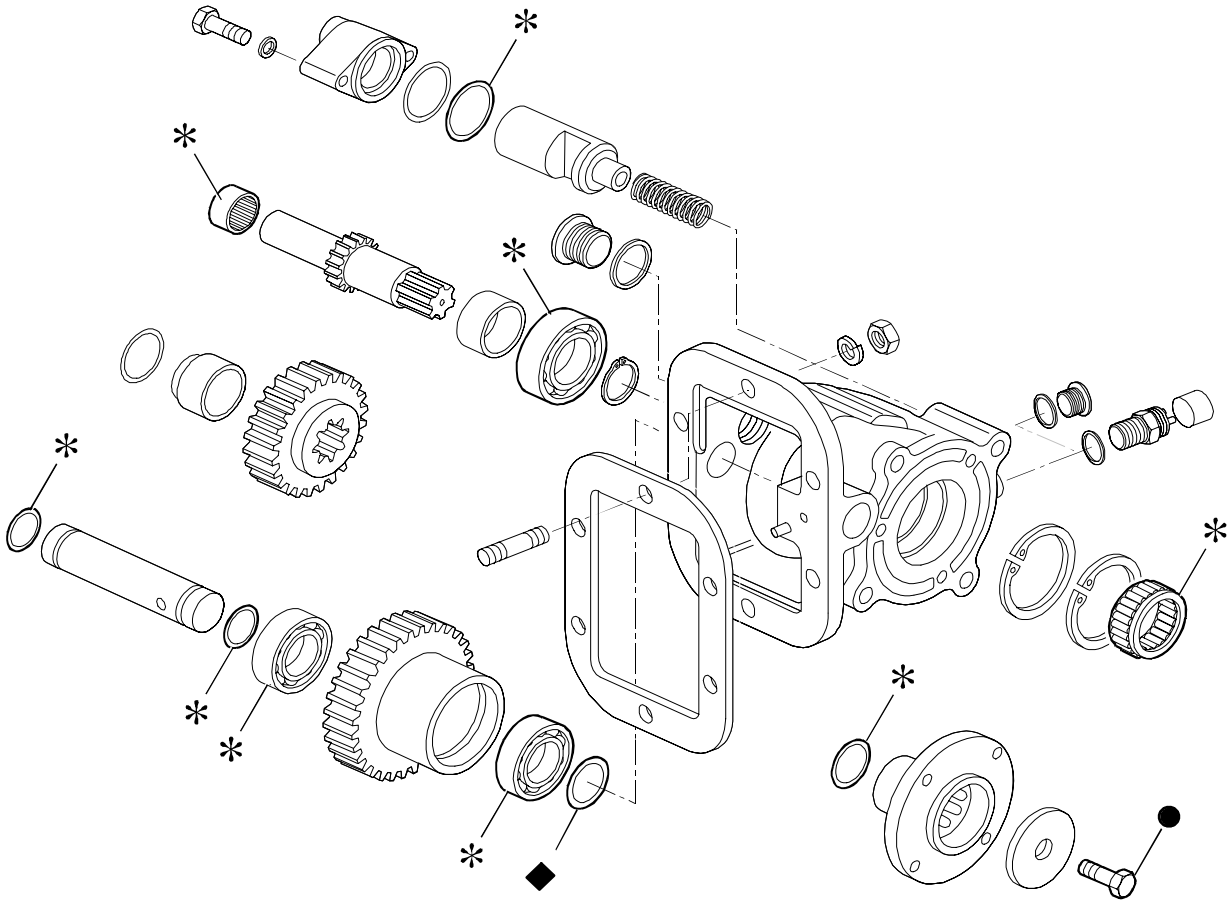

62093

POWER TAKE OFF COMPONENTS

Figure 4

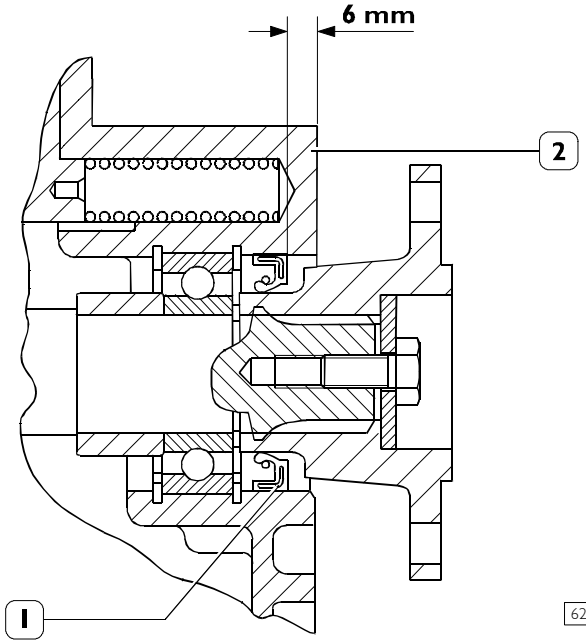

62094

ASSEMBLY STANDARDS

Parts (*): sealing rings and bearings shall be smeared with grease POLIMER 400.

Adjusting ring (♦) thickness shall guarantee taper roller bearing axial backlash equal to 0 ÷ 0.1 mm.

Screw thread (•) shall be smeared with Loctite 242.

Sealing ring (1) shall be fitted with 6 mm sinking from power take off housing (2) surface.

POWER TAKE OFF ELECTRIC ACTUATOR

Description

Figure 5

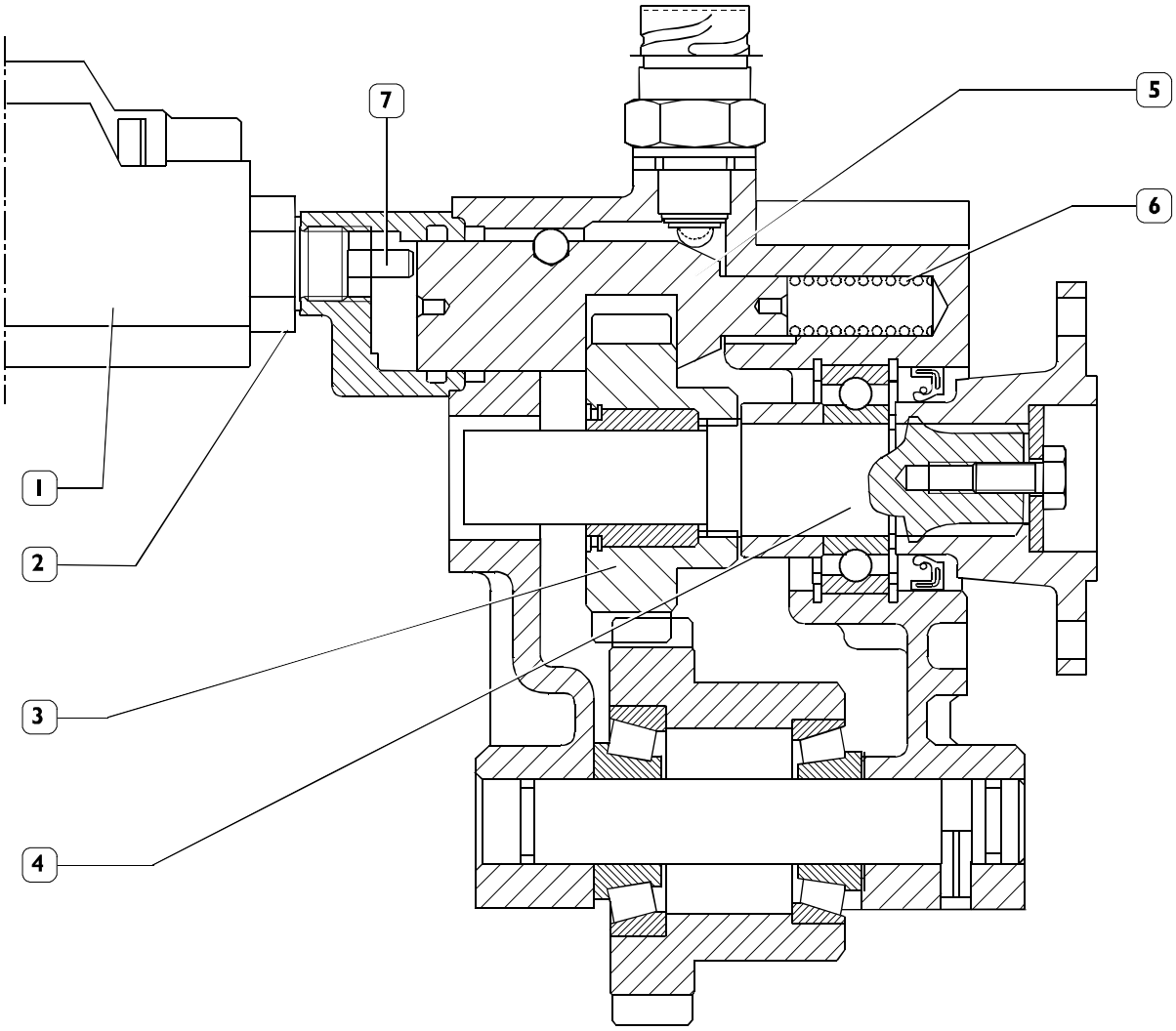

The linear actuator (1) provides motion to control rod (5) controlling power takeoff connection and disconnection.

It is fixed to power takeoff through the bottom side (2), screwing it on the power takeoff box.

Control rod motion is generated by a system composed of electric motor and worm screw (7) which, being blocked in rotation, linearly moves along two directions enabling to connect and disconnect the PTO.

Axial power load is controlled by a spring, set inside actuator (1), providing approx. 350 N force on power takeoff control rod (5).

Operation

POWER TAKEOFF CONNECTION

PTO connection (Figure 5) is divided into two different phases:

The first phase consists in moving forward worm screw (7), rod (5) and sleeve (3), which, coming into contact with shaft toothing (4), creates axial backstop of the rod and worm screw in an intermediate position as to the whole stroke.

The axial backstop of worm screw (7) preloads the spring inside the actuator and switches the electric motor off; the pretensioned spring exerts energises control rod (5) and keeps the axial load even after electric motor switching off.

The second phase consists in stroke continuation if sleeve (3) toothing sustains a relative rotation as to the shaft (4) toothing and therefore stops the axial backstop previously set by the two toothing contrast.

Figure 6

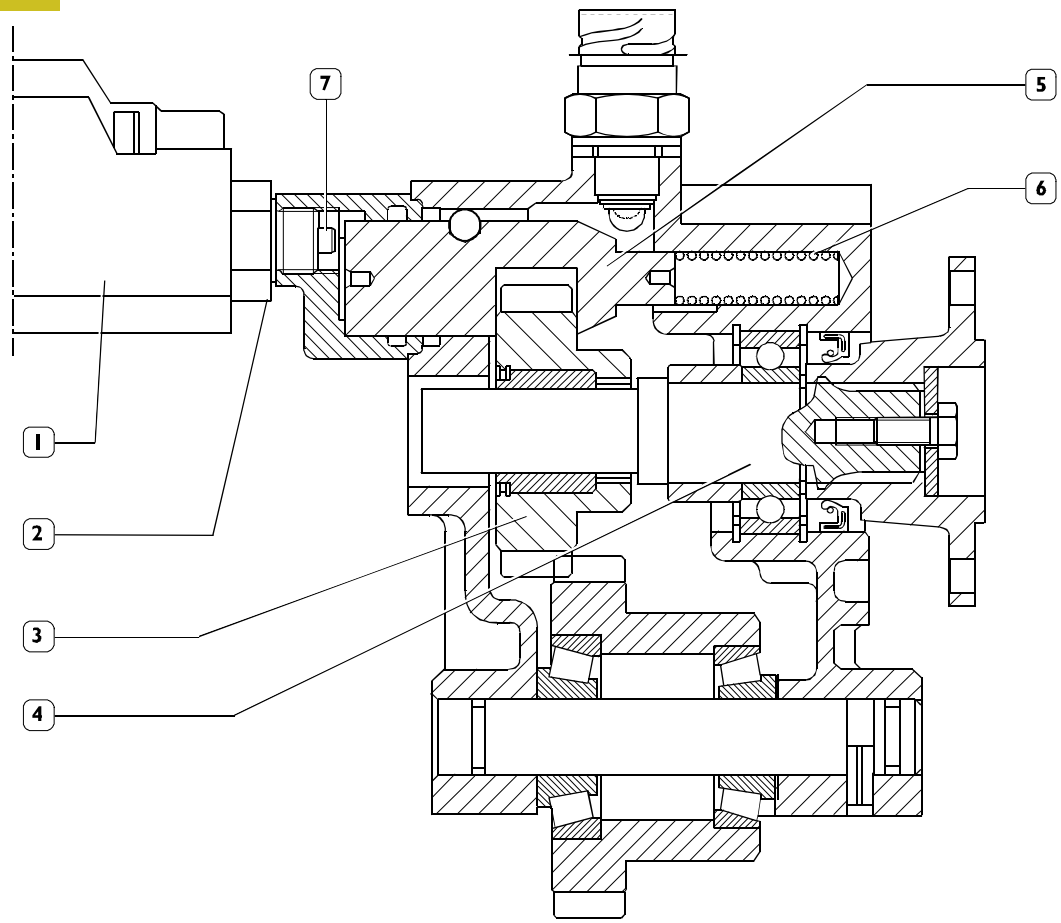

In this case, the spring inside the actuator, previously preloaded, provides a first motion to the elements (7, 5 and 3) and causes the electric motor, previously stopped, starting.

Subsequently, the stroke starts again until it meets a new obstacle, represented by rod (5) limit stop on the power takeoff box.

At this point, another axial backstop condition is created and the above-mentioned operation is repeated: rod (5) tension and electric motor switching off.

As long as the PTO engagement toothings stay on contact with each other, the electric motor is switched off because the pressure on the toothings (3 and 4) is kept by the spring, inside the actuator.

The axial load on the engagement toothings is calibrated (about 350 N) and gradually applied because the action spring (inside the actuator) carries out a determined stroke before being completely loaded. Toothing mouths (3 and 4) shall therefore be protected against violent impacts assuring, as to traditional mechanical or pneumatic system, less engagement element wear and consequently, an higher number of turns to be implemented before component deterioration.

The functionality is more serviceable since the engagement is softer and more silent as to the traditional systems.

Worm screw (7) limit stop is determined by axial load and distance covered by control rod (5).

It is therefore possible to install on PTO having different stroke values without modifying or adding compensation elements.

POWER TAKEOFF DISCONNECTION

The PTO disconnection phase (Figure 6) is divided into two motions:

The first motion consists in the worm screw return (7) through the reversal carried out on the electric motor.

The second motion consists in the control rod retrocession (5) through spring (6) and consequent shaft (4) sleeve (3) disengagement.

The retrocession motion of the worm screw (7) do not depend on the movement carried out by the control rod (5); this guarantees, if the sleeve (3) cannot be disengaged, the immediate backing of the worm screw (7) without causing overloads to the electric motor.

The PTO will be disconnected when the backstop condition is over.

This event can occur if during the disengagement request the shaft (4) is still in rotation or pretensioned by a residual torque.

SECTION 5

5056 Propeller shafts

	Page
SPECIFICATIONS AND DATA	3
DIAGNOSTICS	9
TIGHTENING TORQUES	10
TOOLS	10
PROPELLER SHAFT REMOVAL AND REFITTING	11
❑ Removal	11
❑ Refitting	11
CHECKING PROPELLER SHAFTS ON VEHICLE	11

SPECIFICATIONS AND DATA

Name	mm
Complete spider assembly (radial) in the fork housings	0,03
Transmission shaft max. off-centring	
❑ measured at centre	0,4
❑ measured at extremities	0,25
❑ measured on tang	0,15
Max. working angle	20°

4x2 Vehicles

Figure 1

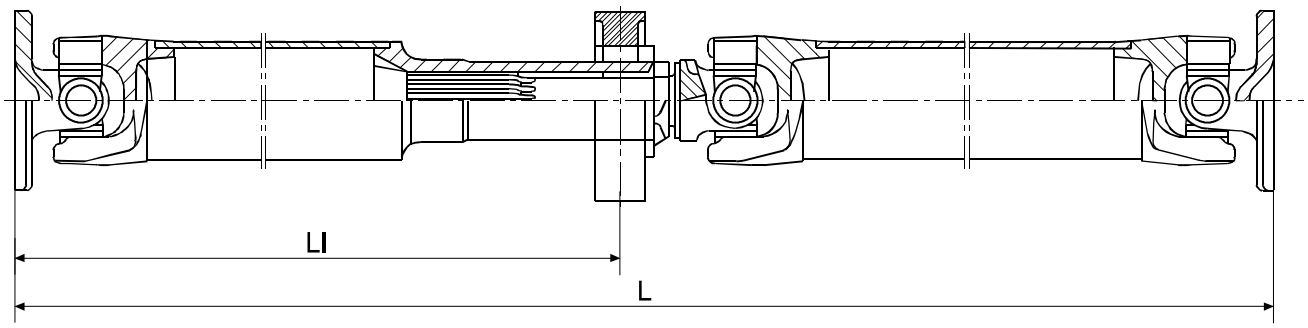

62123

GKN-TYPE ARTICULATED PROPELLER SHAFT

Figure 2

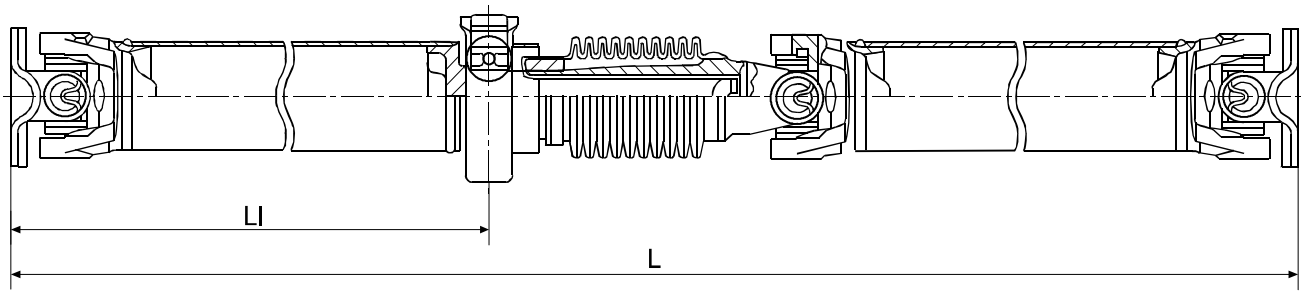

50826

DANA-TYPE ARTICULATED PROPELLER SHAFT

4x2 Vehicles

Figure 3

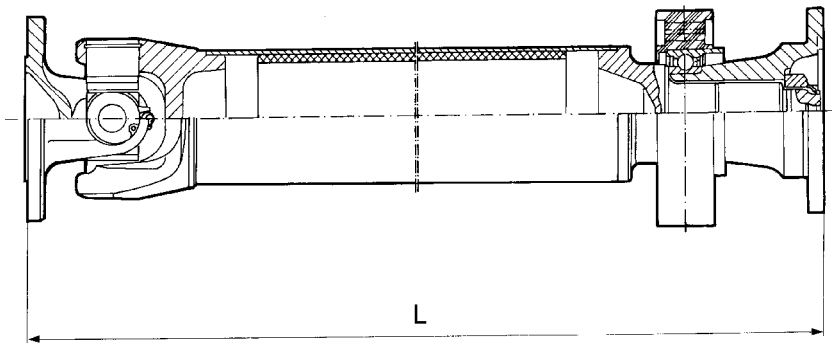

GKN-TYPE CONNECTING SHAFT

62122

Figure 4

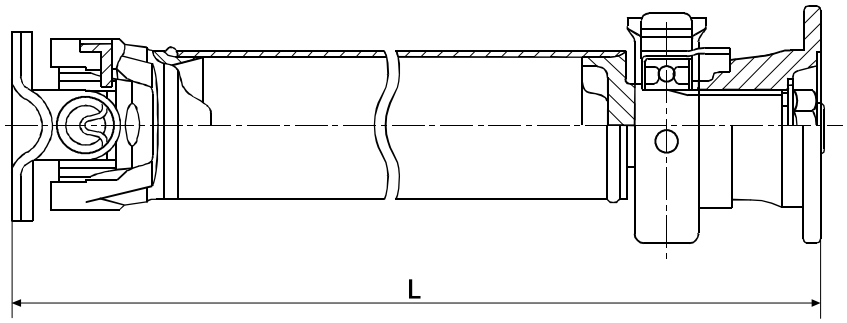

50827

DANA-TYPE CONNECTING SHAFT

Figure 5

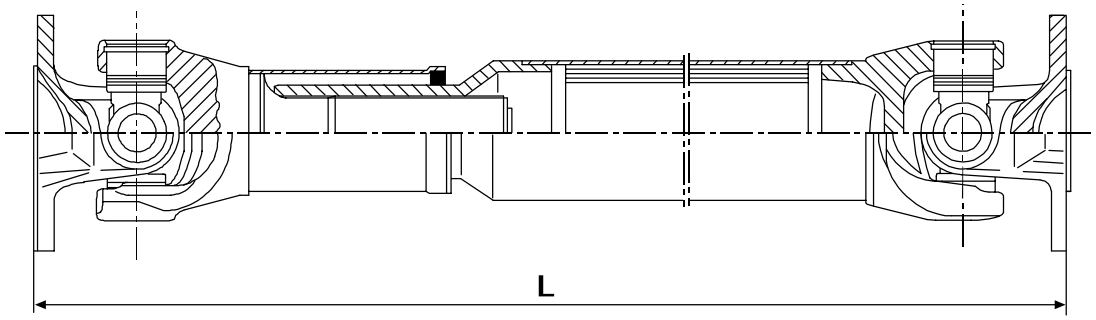

75213

GKN-TYPE CONNECTING SHAFT

MODEL	VERSION	PITCH (mm)	Propeller shaft length (mm) Figure 1-2		
			L_1	L	
				GKN supply	DANA supply
29 L.9/11 29 L.9/11 35 S.9/11 35 S.9/11	VAN CHASSI CAB VAN CHASSI CAB	3000	813	2120 ÷ 2210	2120 ÷ 2205
29 L.9/11	CHASSI CAB	3450	1134	2565 ÷ 2655	-
35 S.9/11	CHASSI CAB		1135	-	2580 ÷ 2665
35 S.13 35 S.13	VAN CHASSI CAB	3000	763	2075 ÷ 2165	2075 ÷ 2160
35 S.13	CHASSI CAB	3450	1085	2520 ÷ 2610	2520 ÷ 2605
35 C - 40 C.9/11 35 C - 40 C.9/11	VAN CHASSI CAB	3000	652	2080 ÷ 2170	2080 ÷ 2165
35 C.13 35 C.13 40 C.13 45 C.11 45 C.11 50 C.11/13 50 C.11/13	VAN CHASSI CAB CHASSI CAB VAN CHASSI CAB VAN CHASSI CAB	3000	602	2035 ÷ 2125	2035 ÷ 2120

MODEL	VERSION	PITCH (mm)	Propeller shaft length (mm)			
			Front shaft Figure 3-4	Rear shaft Figure 1-2		
			L	L_1	L	
					GKN supply	DANA supply
29 L.9/11 35 S.9/11	VAN VAN	3300	891	343	1540 ÷ 1630	1540 ÷ 1625
29 L.9/11 35 S.9/11	CHASSI CAB CHASSI CAB	3750	891	666	1980 ÷ 2070	1980 ÷ 2065
29 L.9/11 35 S.9/11	VAN VAN	3950	891	866	2180 ÷ 2270	2180 ÷ 2265
35 S.13	VAN	3300	841	343	1540 ÷ 1630	1540 ÷ 1625
35 S.13	CHASSI CAB	3750	841	666	1980 ÷ 2070	1980 ÷ 2065
35 S.13	VAN	3950	841	866	2180 ÷ 2270	2180 ÷ 2265
35 C-40 C.9/11	VAN	3300	730	608	1650 ÷ 1740	1650 ÷ 1735
35 C-40 C.9/11	CHASSI CAB	3450	730	607	1815 ÷ 1905	1815 ÷ 1900
35 C-40 C.9/11	CHASSI CAB	3750	730	652	2090 ÷ 2180	2090 ÷ 2175
35 C-40 C.9/11	VAN	3950	730	986	2315 ÷ 2405	2315 ÷ 2400
35 C-40 C.9/11	CHASSI CAB	4100	730	1024	2450 ÷ 2540	2450 ÷ 2530
45 C.11	CHASSI CAB	3450	680	607	1800 ÷ 1905	1815 ÷ 1900
45 C.11	CHASSI CAB	3750	680	652	2090 ÷ 2180	2090 ÷ 2175
45 C.11	VAN	3950	680	986	2295 ÷ 2385	2315 ÷ 2400
35 C.13	VAN	3300	680	607	1650 ÷ 1740	1650 ÷ 1735

MODEL	VERSION	PITCH (mm)	Propeller shaft length (mm)			
			Front shaft Figure 3-4	Rear shaft Figure 1-2		
			L	L_1	L	
					GKN supply	DANA supply
35 C.13	CHASSI CAB	3750	680	652	2090 ÷ 2180	2090 ÷ 2175
35 C.13	VAN	3950	680	986	2295 ÷ 2405	2315 ÷ 2400
35 C-40 C.13	CHASSI CAB	3450	680	607	1800 ÷ 1905	1815 ÷ 1900
35 C-40 C.13	CHASSI CAB	4100	680	1024	2450 ÷ 2540	2450 ÷ 2535
45 C.11/13	VAN	3300	680	607	1650 ÷ 1740	1650 ÷ 1735
50 C.11/13	VAN	3300	680	607	1650 ÷ 1740	1650 ÷ 1735
50 C.11/13	CHASSI CAB	3450	680	607	1800 ÷ 1905	1815 ÷ 1900
50 C.11/13	CHASSI CAB	3750	680	652	2090 ÷ 2180	2090 ÷ 2175
50 C.11/13	VAN	3950	680	986	2295 ÷ 2405	2315 ÷ 2400

MODEL	VERSION	PITCH (mm)	Propeller shaft length (mm)					
			Front shaft Figure 3-4	Central shaft Figure 3-4-(•) 5		Rear shaft Figure 1-2-(•) 5		
				L		L_1	L	
			L	GKN supply	DANA supply		GKN supply	DANA supply
45 C.11/13 50 C.11/13	VAN	3750	(•) 680	(•) 755 ÷ 855	(•) 755 ÷ 865	-	(•) 1080 ÷ 2180	(•) 1080 ÷ 1190
45 C.11/13 50 C.11/13	VAN	4350	680	746		722	1950 ÷ 2040	1965 ÷ 2050
				(•) 755 ÷ 855	(•) 755 ÷ 865	(•) 440	(•) 1630 ÷ 1720	(•) 1630 ÷ 1715
45 C.11/13 50 C.11/13	VAN	4750	680	730		1056	2380 ÷ 2470	2380 ÷ 2465
				(•) 755 ÷ 855	(•) 755 ÷ 865	(•) 781	(•) 2100 ÷ 2190	(•) 2100 ÷ 2185

(•) Vehicles with Telma retarder

MODEL	VERSION	PITCH (mm)	Propeller shaft length (mm)			
			Front shaft Figure 3-4	Rear shaft Figure 1-2		
			L	L_1	L	
					GKN supply	DANA supply
60 C - 65 C.15	VAN	3300	670	614	1630 ÷ 1720	1630 ÷ 1715
60 C - 65 C.15	CHASSI CAB	3450	670	626	1780 ÷ 1870	1780 ÷ 1865
60 C - 65 C.15	CHASSI CAB	3750	670	660	2075 ÷ 2165	2075 ÷ 2160
60 C - 65 C.15	VAN	3950	670	995	2280 ÷ 2370	2280 ÷ 2365

MODEL	VERSION	PITCH (mm)	Propeller shaft length (mm)				
			Front shaft Figure 3-4	Central shaft Figure 3-4	Rear shaft Figure 1-2		
			L	L	L_1	L	
						GKN supply	DANA supply
60 C - 65 C.15	CHASSI CAB	4350	670	801	724	1885 ÷ 1975	1885 ÷ 1970
60 C - 65 C.15	CHASSI CAB	4750	670	730	1065	2350 ÷ 2440	2350 ÷ 2435

MODEL	VERSION	PITCH (mm)	Front shaft Figure 3-4	Propeller shaft length (mm)				
				Central shaft Figure 5		Rear shaft Figure 5.1.2		
				L		L_1	L	
			L	GKN supply	DANA supply		GKN supply	DANA supply
60 C-65 C.15	CHASSIS COWL	3750	670	(•) 970 ÷ 1070	-	-	(•) 825 ÷ 925	-
60 C-65 C.15	CHASSIS COWL	4350	670	(•) 970 ÷ 1070	-	-	(•) 1395 ÷ 1495	-
60 C-65 C.15	CHASSIS COWL	4750	670	(•)1080 ÷ 1180	-	408	-	(•) 1705 ÷ 1790

(•) Vehicles with Telma retarder

DIAGNOSTICS

The main operating faults of the propeller shaft are as follows:

I - noise and vibrations

I NOISE AND VIBRATIONS

Deformation of shaft.	– YES →	Replace shaft.
NO ↓		
Shaft unbalanced.	– YES →	Check balancing of shaft and determine the points where to weld the counterweights.
NO ↓		
Excessive play between the splined profiles.	– YES →	Replace the shaft.
NO ↓		
Nuts and bolts fastening shaft to either transmission or rear axle sleeves loose.	– YES →	After a careful check, tighten up the loose screws and nuts, and eventually replace any damaged ones.
NO ↓		
Universal joints seized-up or excessively worn.	– YES →	Overhaul or replace the universal joints.
NO ↓		
Insufficient lubrication of the parts.	– YES →	Lubricate the parts at the appropriate nipples.
NO ↓		
Elastic support fixing screws loose.	– YES →	Tighten the screws to the required driving torque.

(Continues)

Elastic dowel of central support in bad condition. – YES → Replace the support.

NO

Central elastic support bearing in bad condition or excessive play. – YES → Replace the support.

NO

Flange fixing screws or ring nuts on propeller shaft tang loose. – YES → Tighten the screws or the ring nuts to required driving torque.

TIGHTENING TORQUES

PART		TORQUE	
		Nm	kgm
Ring nut for fixing to connecting shaft		250 ± 25	25.4 ± 2.5
Nut for screw for fixing flanges to propeller shaft	M10 x 1,5	63.5 ± 6.5	6.5 ± 0.6
	M12 x 1.25	116.5 ± 11.5	11.8 ± 1.2
Nut, linkage shaft to chassis side member fixing screw		62.5 ± 6.5	6.3 ± 0.6

TOOLS

TOOL NO.		DESCRIPTION
99370618	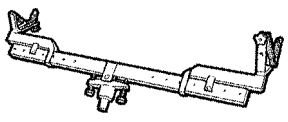	Support for removal-refitting propeller shaft

505620 PROPELLER SHAFT REMOVAL AND REFITTING

Figure 6

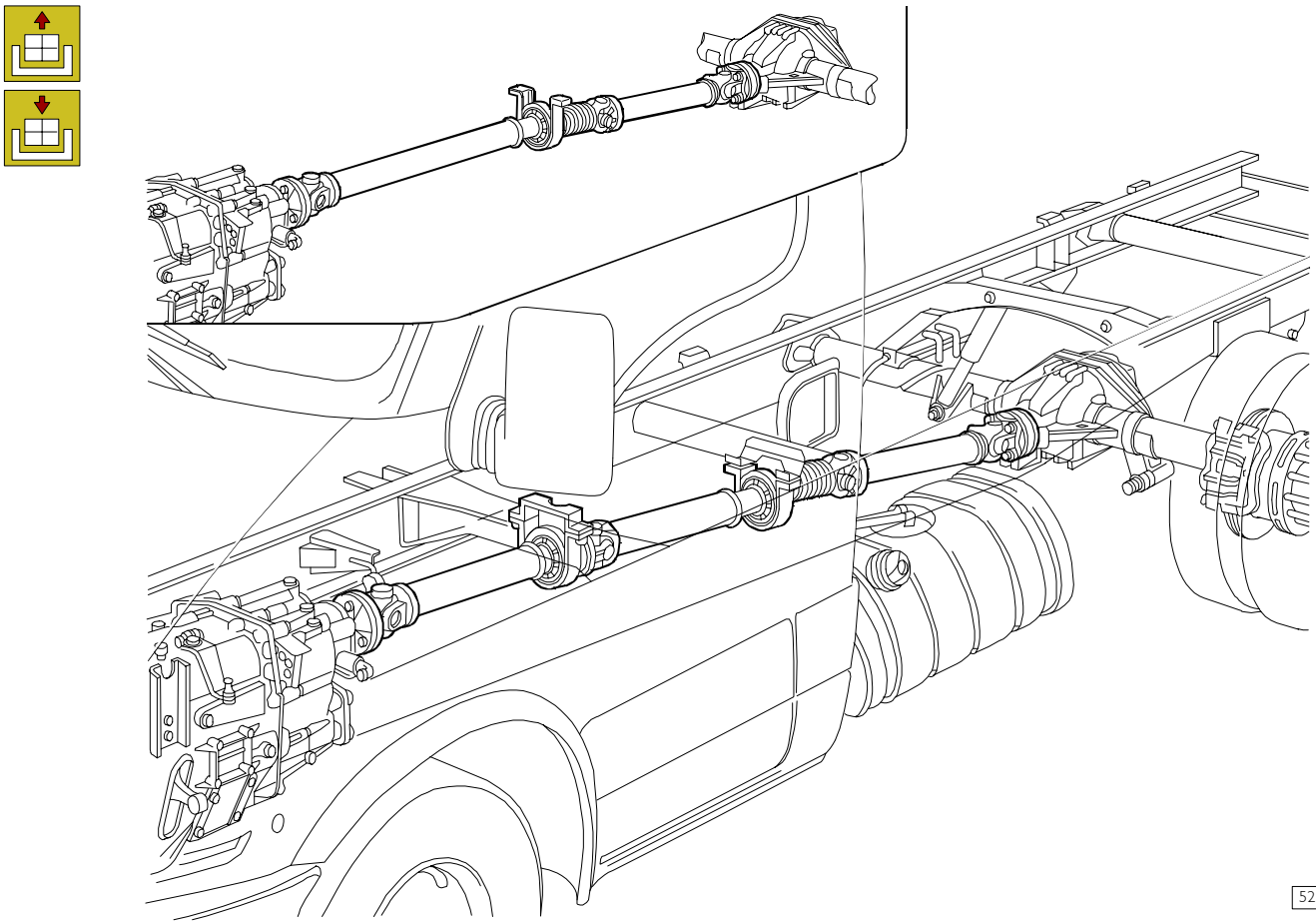

Removal

When overhauling the propeller shaft, always begin by removing the rear shaft.

Arrange the support 99370618 on the hydraulic jack and apply the support to the propeller shaft.
Remove the fixing bolts from the flange and remove the shaft; for the intermediate and front axles, also remove the chassis shaft support.

Refitting

Repeat the same operations for removal in the opposite order and observe the following:

- ❑ make sure that the arrows shown on the moving part and on the shaft are aligned;
- ❑ make sure that the holes of the front flange are aligned with those of the rear flange;
- ❑ the nuts for the flange coupling screws must be replaced and never reused;
- ❑ the flange coupling screws must be inserted into the holes of the flange from the side of the universal joint;
- ❑ the nuts and screws must be tightened to the required driving torque;
- ❑ the flange of the moving part of the propeller shaft must be connected to the output shaft flange.

CHECKING PROPELLER SHAFTS ON VEHICLE

Figure 7

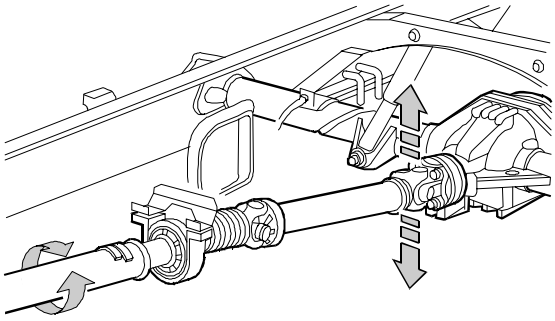

The plates welded to the propeller shafts are counterweights.
If the plates are missing the shaft must be re-balanced.
By operating on the propeller shaft and at the same time, in the opposite direction, on the sliding sleeve, check that there is not too much slack between the splines.
By operating on the sleeve forks. check that the spiders are not worn; if they are, replace them.

SECTION 6

5250 Rear axles

	Page
DIAGNOSTICS	3
REAR AXLE 450210	5
REAR AXLES 450311/1 - 450511	35
REAR AXLE 450517/2	61

DIAGNOSTICS

The main rear axle operating faults are as follows:

1 - Wheel hubs noise;
2 - Rear axle noise;
3 - Noise at release;
4 - Noise during acceleration;
5 - Cornering noise.

1 WHEEL HUBS NOISE

Insufficient lubrication.	– YES →	Check that there are no leaks from gaskets or the rear axle casing and top up oil to correct level.
NO ↓		
Wheel hub bearings inefficient.	– YES →	Remove the hub and replace inefficient parts.
NO ↓		
Bad adjustment of wheel hub bearings.	– YES →	Adjust bearings.

2 REAR AXLES NOISE

Lubricating oil level low.	– YES →	Check that there are no leaks from gaskets or the rear axle casing and top up oil to correct level.
NO ↓		
Drive shaft splines to fit the differential crown wheels damaged.	– YES →	Overhaul the rear axle and replace worn or damaged parts.
NO ↓		
Bad adjustment of hub bearings.	– YES →	Adjust the bearings clearance.

(Continues)

Bad adjustment or wear on differential gears or bearings.	– YES →	Locate the trouble and overhaul the unit.

3 NOISE AT RELEASE

Improper fitting clearance between pinion and ring bevel gear.	– YES →	Remove the gear housing inspection cover and adjust clearance between pinion and ring bevel gear.

4 NOISE DURING ACCELERATION

Insufficient lubrication.	– YES →	Check that there are no leaks from gaskets or the rear axle casing and top up oil to correct level.
NO ↓		
Gear housing bearings badly set or deteriorated.	– YES →	Overhaul the unit.
NO ↓		
Bad tooth contact between pinion and ring bevel gear.	– YES →	Adjust the contact.

5 CORNERING NOISE

Improper clearance between planetary gears and crown wheels.	– YES →	Overhaul or replace the unit.

Rear axle 450210

	Page
REAR AXLE REMOVAL - REFITTING	7
❑ Removal	7
❑ Refitting	7
DESCRIPTION	9
SPECIFICATIONS AND DATA	10
TIGHTENING TORQUES	12
TOOLS	15
OVERHAULING THE REAR AXLE ASSEMBLY	19
❑ Air breather disassembly - assembly	19
❑ Wheel hub overhaul	19
❑ Assembly	20
REPAIRING THE DIFFERENTIAL	22
❑ Disassembling the differential unit	22
❑ Gear housing removal	23
❑ Checking the parts comprising the differential	25
❑ Assembly	25
❑ Assembly of gear housing	26
❑ Assembling the bevel pinion assembly	27
❑ Assembly of differential unit	30

525010 REAR AXLE REMOVAL - REFITTING

Removal

Position the vehicle on level ground and lock the front wheels.

Loosen rear wheel fixing screws.

Lift the vehicle at the back and set it on stands.

Put the hydraulic trolley 99321024 under the rear wheels. Take out the screws securing the wheels and remove the guard.

Unscrew the handbrake adjustment nut (2). Free the cables from the chassis frame, unhooking the retaining clamps (1).

Unscrew the screws (3) for the nuts securing the propeller shaft (4).

Disconnect the electric cables for indicating brake lining wear (11) and for the speed sensors, if present.

Disconnect the braking corrector adjustment tie (16) from the axle housing.

Unscrew the nuts (10) securing the shock absorbers (12).

Disconnect the brake hydraulic system pipes (13) from the axle housing.

Unscrew the screws (7) securing the connecting rods fastening the stabilizer bar (6) to the axle.

Disconnect the pipe (17) from the axle housing oil vapour vent.

Position a hydraulic jack equipped with the mounting 99370617 under the axle.

Remove the screw (14) and the nut securing the leaf springs (5) to the shackles (15) and put them on the ground.

Unscrew the nuts (8) of the brackets (9) securing the axle to the leaf spring (5).

Lower the hydraulic jack and extract the axle.

Figure 1

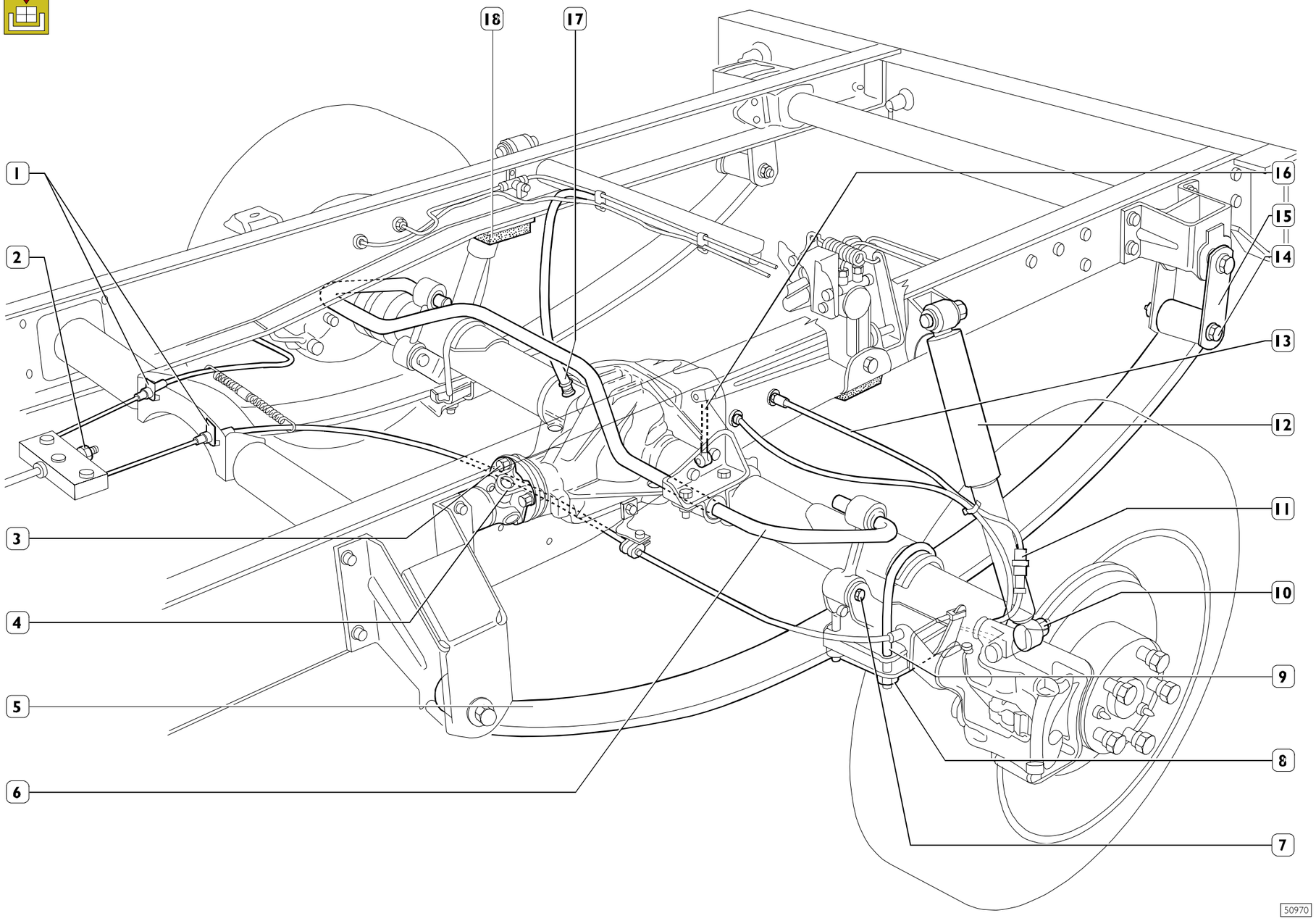

Refitting

For refitting, carry out the operations described for removal in reverse order, taking the following precautions:

- ❑ Check the thread of the brackets joining the leaf springs to the axle. If there are any irregularities, rectify the thread (operation 500412) or replace the brackets.
- ❑ Bleed the air from the brake hydraulic system as described under the relevant heading (operation 784010).
- ❑ Adjust the handbrake control ties as described under the relevant heading (operation 502710).
- ❑ Lock the nuts or screws to the required tightening torque.
- ❑ The self-locking nuts must not be reused.
- ❑ The lubricating oil in the axle housing should be at the right level.
- ❑ Check the state of the flexible pads (18) and replace them if they have deteriorated (operation 500417).

DESCRIPTION

The rear axle is the load-bearing type with a single reduction using a hypoid crown wheel and pinion.

The axle housing is made of pressed sheet steel with hot pressed arms.

The central portion, seat of the differential unit, is equipped with cooling fins.

The bevel pinion is supported by two pre-lapped tapered roller bearings to hold the bearing pre-load better.

The bearings are factory lubricated by the manufacturer with rustproof protective oil.

The rolling torque of the bearings of the bevel pinion is adjusted by changing the thickness of the adjustment ring between the two tapered roller bearings.

In addition, it is possible to adjust the position of the bevel pinion with respect to the ring bevel gear by changing the thickness of the ring between the axle housing and the bevel pinion rear bearing external ring.

The gear housing is supported by two tapered roller bearings, also pre-lapped and lubricated with rustproof protective oil.

The rolling torque of the bearings is adjusted with adjustment rings between the housing and the spacer rings.

The clearance between pinion and crown wheel is adjusted by changing the thickness and/or position of the adjustment rings, though the total thickness must be the same as that of the adjustment rings removed.

The gear housing may be of two different sizes depending on the ratio of the crown wheel and pinion.

Differential gear unit consists of two planetary gears and four sun gears.

The drive shafts are supported inside the arms of the axle housing by UNIT BEARINGS lubricated for life, which require no adjustment.

The brakes are disc brakes with floating brake calipers.

The disc brakes are splined onto the end of the drive shafts and secured with pins that also serve as centring for the wheel rims.

The brake calipers are secured with flanges welded onto the end of the arms of the axle housing.

The brake calipers are equipped with the parking brake device.

Figure 2

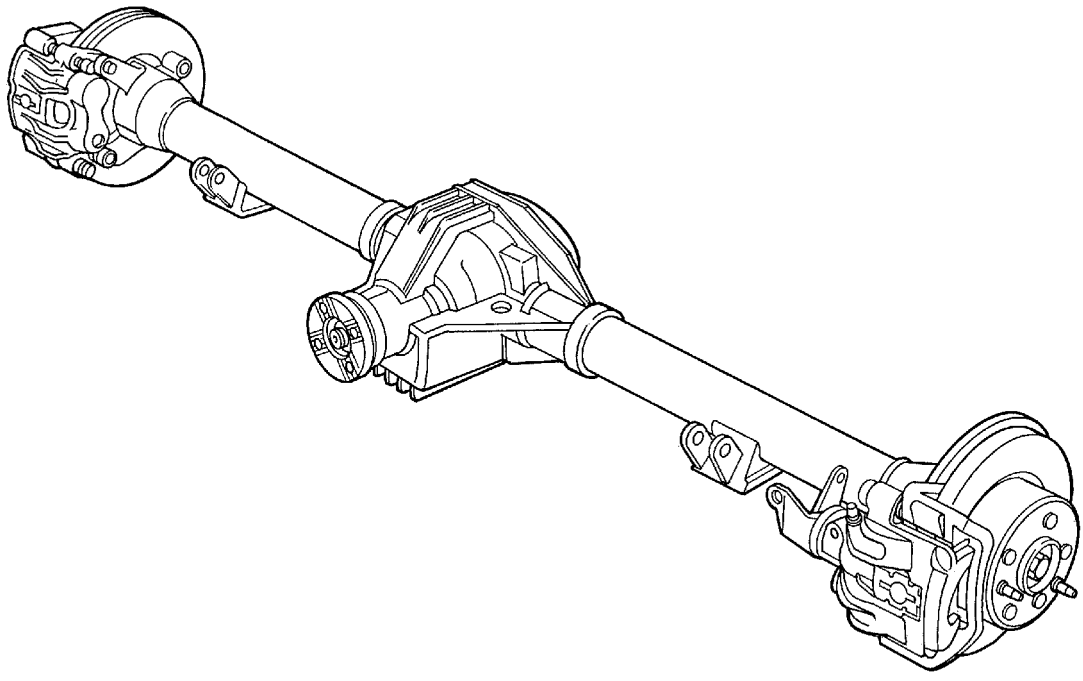

51857

SPECIFICATIONS AND DATA

Type of rear axle: Simple reduction type	**450210**
DIFFERENTIAL UNIT	
Reduction bevel gear pair ratio (No. of teeth: pinion/crown)	15/44 (1/2.93) - 13/41 (1/3.15) - 12/41 (1/3.41) - 12/43 (1/3.58) - 12/47 (3.91) - 10/41 (1/4.10) - 9/40 (1/4.44) - 11/49 (1/4.45) - 9/44 (1/4.88) - 8/41 (1/5.12) - 8/45 (1/5.63)
Bevel pinion bearings	2 with taper rollers
Bevel pinion bearings rolling torque (lubricated bearings and gaskets) Nm New bearings kgm	 2.3 ÷ 3.3 0.23 ÷ 0.33
Adjustment of pre-load of bevel pinion bearings	By means of adjustment ring
> IVECO PARTS Bevel pinion bearings pre-load adjustment ring thicknesses	5.125 ÷ 6.150 mm with progression of 0.025 mm.
Temperature of assembly of inner bearing ring on bevel pinion	-
Position of bevel pinion with respect to differential casing	By means of adjustment ring
> IVECO PARTS Thickness of adjustment rings placed between bevel pinion and differential casing	3.2 ÷ 4.1 mm with progression of 0.05 mm.
Bearings for gear housing	2 with taper rollers
Differential casing bearings rolling torque ❑ 15/44 - 13/41- 12/41 - 12/43 - 12/47 - 10/41: DaNm kgm ❑ 11/49 - 9/40 - 9/44 - 8/41 - 8/45: DaNm kgm	 0.27 ÷ 0.39 0.27 ÷ 0.39 0.26 ÷ 0.37 0.26 ÷ 0.37
Adjustment of differential casing bearings rolling torque	By means of adjustment rings
> IVECO PARTS Thickness of adjustment rings of differential casing bearings rolling torque	2.550 ÷ 3.350 mm with progression of 0.025 mm.
Clearance between pinion and ring bevel gear with reduction ratios ❑ 13/41 - 12/43 - 9/43 - 8/45: ❑ 10/41 - 9/40:	 0.13 ÷ 0.18 mm 0.15 ÷ 0.20 mm

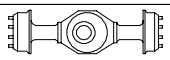 Type of rear axle: Simple reduction type	**450210**
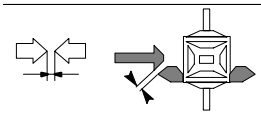 Adjustment of clearance between pinion and ring bevel gear	By means of adjustment rings
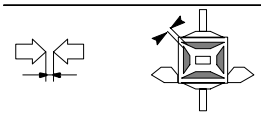 Clearance between planetary and crown wheels	0.05 ÷ 0.15 mm
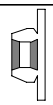 **WHEEL HUBS**	
 Wheel hub bearings	UNIT-BEARING
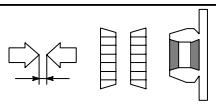 Wheel hub bearings end play	-
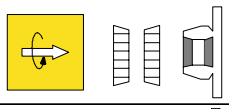 Wheel hub bearings rolling torque Nm kgm	- -
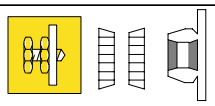 Adjustment of wheel hub bearings end play	Not adjustable Tighten fixing ring nut to torque
 Rear axle oil Quantity Litres	**TUTELA W140/M-DA (SAE 85 W 140)** 1.85
Dry rear axle weight : ❑ With ABS kg ❑ Without ABS kg ❑ Max capacity (GRW) kg	 112.1 110.6 2240

TIGHTENING TORQUES

Figure 3

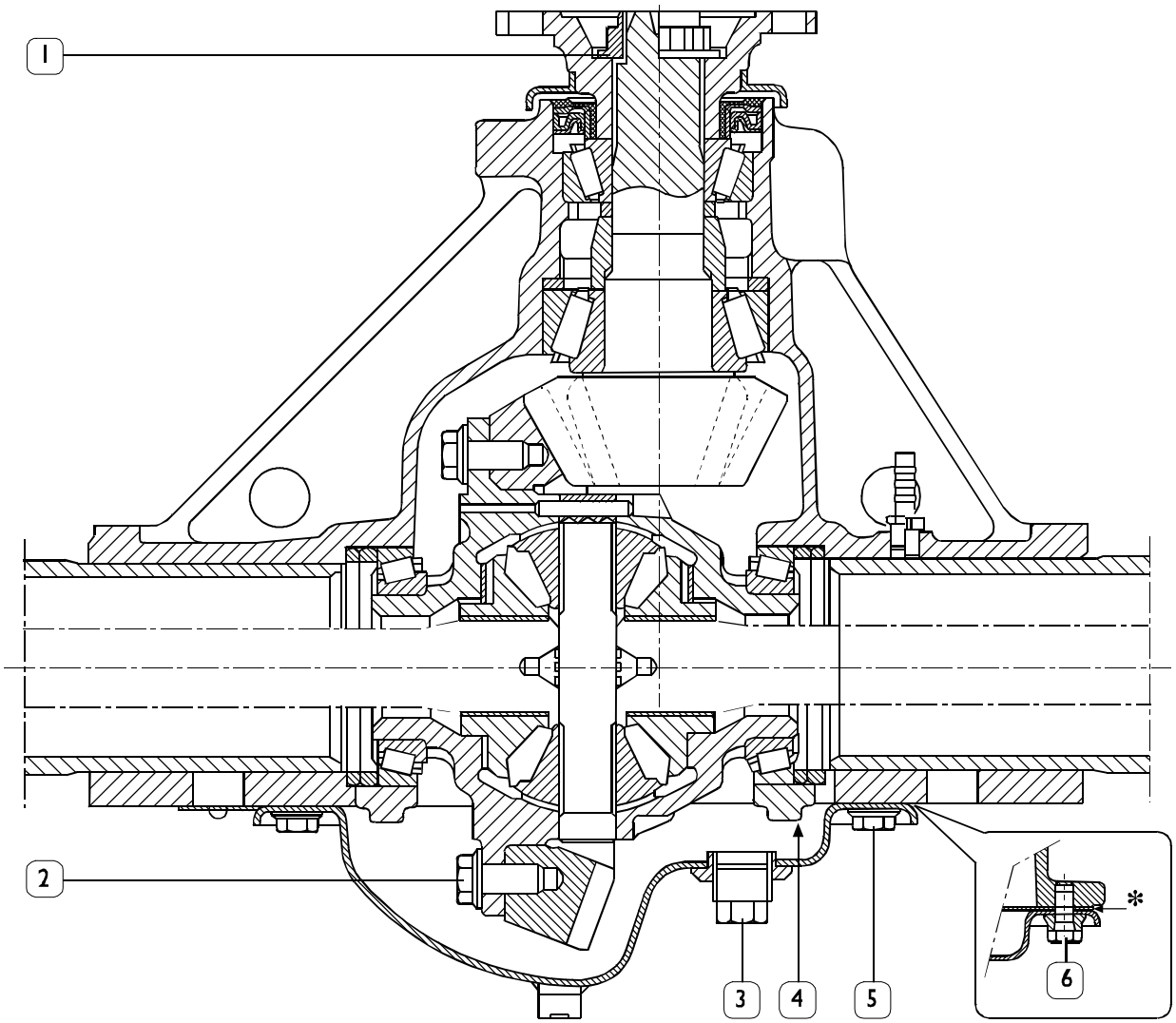

SECTIONAL VIEW OF 450210 REAR AXLE DIFFERENTIAL

PART		TORQUE	
		Nm	kgm
1	Bevel pinion retaining nut	400 ÷ 500	40 ÷ 50
2	Screw securing half-housing and ring bevel gear	89 ÷ 108	8,9 ÷ 10,8
3**	Oil filler plug	49 ÷ 62	4.9 ÷ 6.2
4	Screw securing caps to differential housing	100 ÷ 120	10 ÷ 12
5	Screw securing gearing inspection cover to the axle housing	80 ÷ 95	8 ÷ 9.5
6	Screw securing gearing inspection cover to the axle housing (alternative mounting)	31.5 ÷ 38.5	3.15 ÷ 3.85
***	Oil drainage plug	49 ÷ 62	4.9 ÷ 6.2

* = Apply LOCTITE 5910 on the housing

** = Apply LOCTITE 577 on the plug thread

*** = Apply LOCTITE 573 on both sides of the gasket

Figure 4

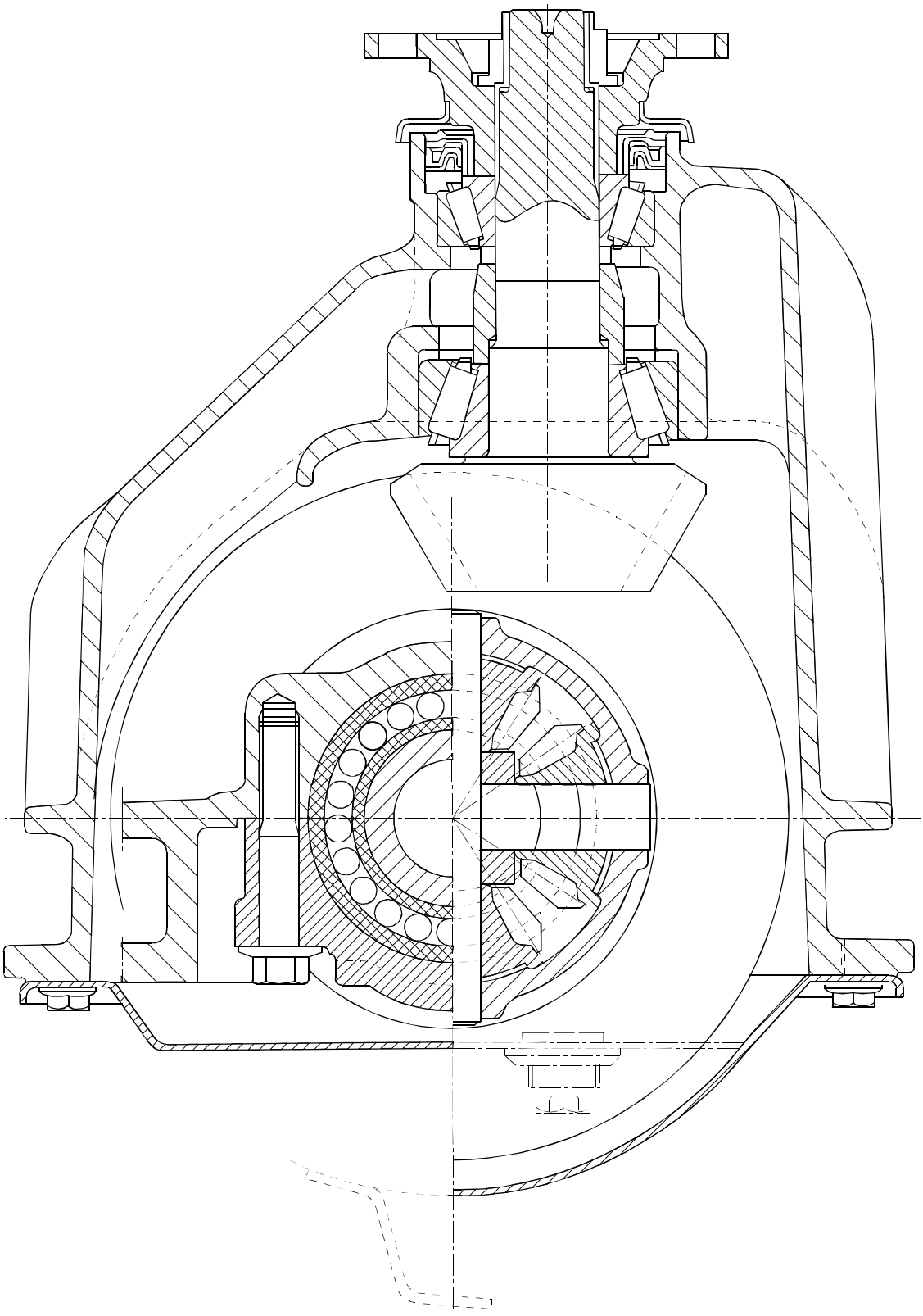

SECTIONAL VIEW OF 450210 REAR AXLE DIFFERENTIAL

Figure 5

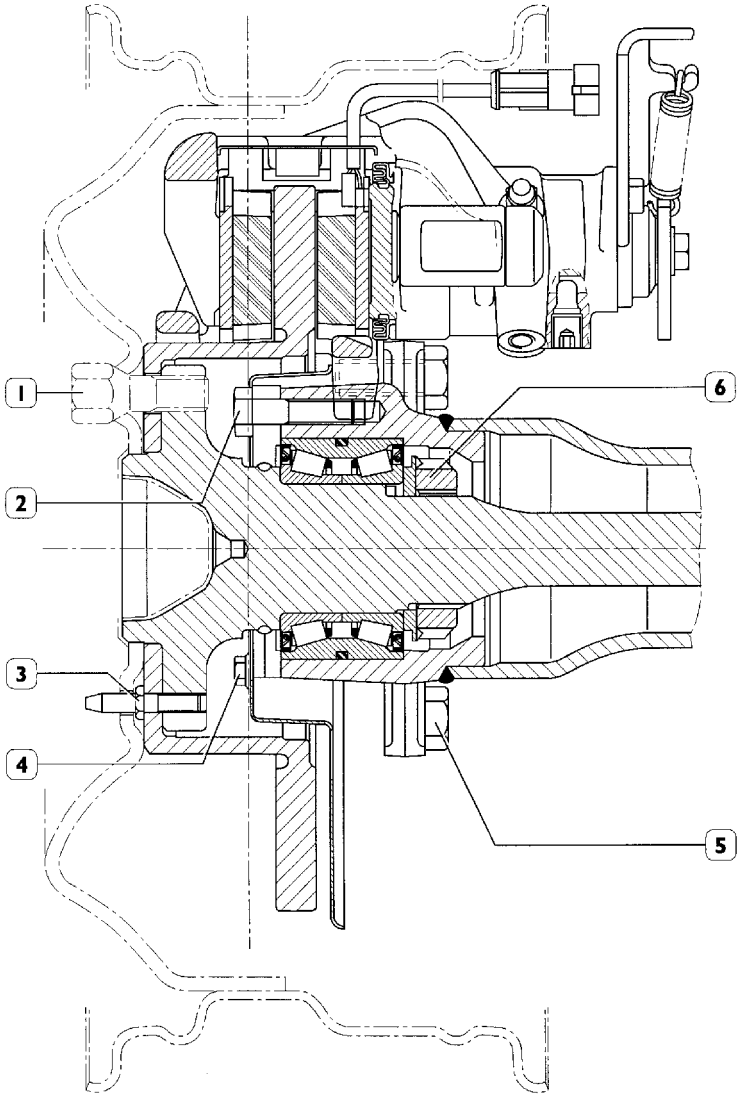

SECTIONAL VIEW OF 450210 REAR AXLE HUB

PART		TORQUE	
		Nm	kgm
1	Wheel fixing screw	160	16
2	Screw securing cover and guard in sheet metal to the axle housing	64 ÷ 79	6.4 ÷ 7.9
3	Screw securing disc and drive shaft	13 ÷ 21	1.3 ÷ 2.1
4	Screw securing cover and guard in sheet metal	10 ÷ 16	1 ÷ 1.6
5	Screw securing brake caliper	176 ÷ 217	17.6 ÷ 21.7
6	Ring nut securing drive shaft	300 ÷ 350	30 ÷ 35

TOOLS

TOOL NO.		DESCRIPTION
99305121	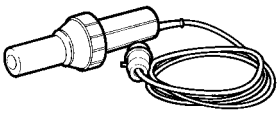	Hot air drier
99322215	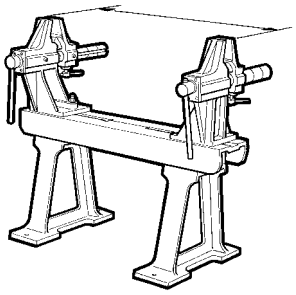	Front and rear axle overhaul stand
99340204	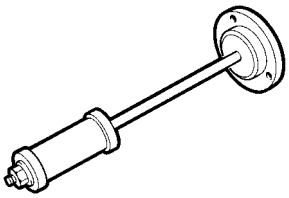	Tool to extract bearing and drive shaft from rear axle housing
99341003	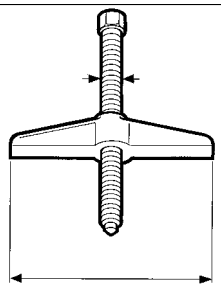	Single-acting rear axle
99341009	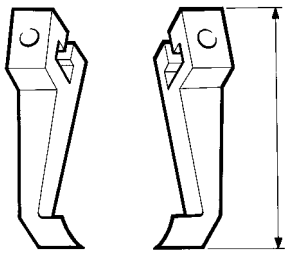	Pair of brackets
99341011	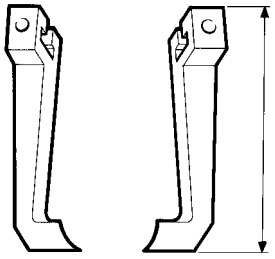	Pair of brackets

TOOLS

TOOL NO.		DESCRIPTION
99341015	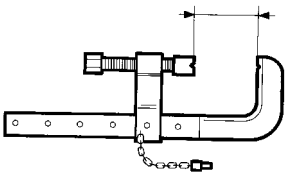	Clamp
99345057	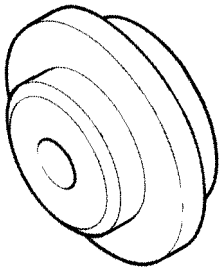	Extractor reaction block
99348001	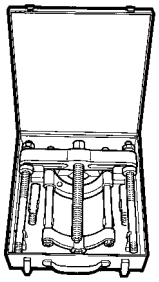	Extractor with locking device
99355176	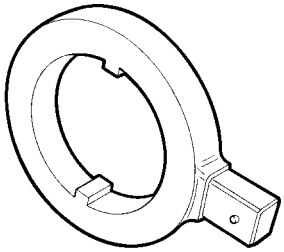	Shaft bearing ring nut wrench
99370006	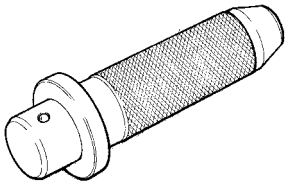	Handle, interchangeable drift
99370007	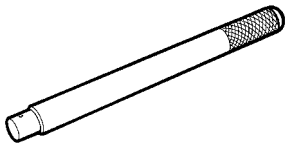	Grip for interchangeable punches

TOOLS

TOOL NO.		DESCRIPTION
99370241	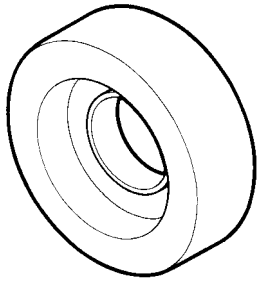	Tool for fitting drive shaft bearing
99370286	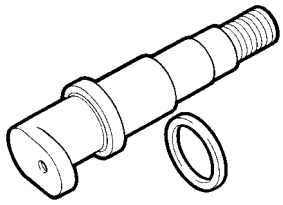	Tool to determine thickness of adjustment of bevel pinion (use with 99395728)
99370317	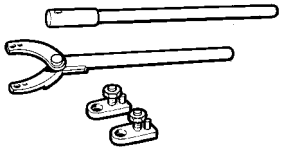	Reaction lever with extension for flange retaining
99370617	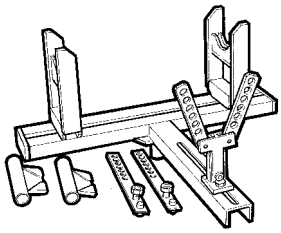	Universal mounting to support axles during removal and refitting
99372236	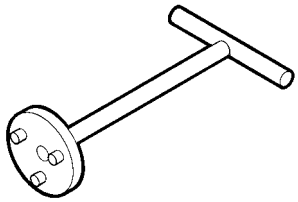	Tool to move brake caliper piston back
99374091	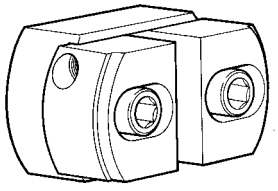	Punch to fit external races of bearings (diameter 55 ÷ 69 mm use with 99370007)

TOOLS

TOOL NO.		DESCRIPTION
99374092	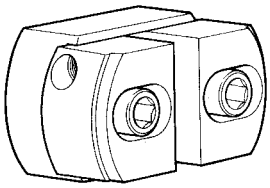	Punch to fit external races of bearings (diameter 69 ÷ 91 mm use with 99370007)
99374456	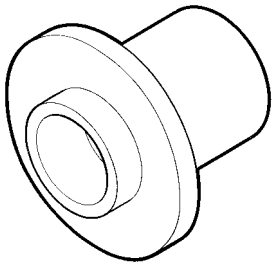	Key to fit differential bevel pinion gasket (use with 99370006)
99389819	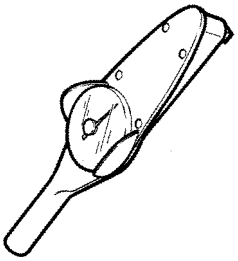	Dynamometric wrench (0 ÷ 10 Nm) with 1/4" square connection
99395728	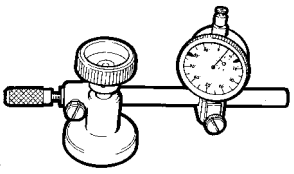	Dial gauge with mounting to be used with the tools to determine the thickness of adjustment of the bevel pinion

525010 OVERHAULING THE REAR AXLE ASSEMBLY

The drive shafts, brake disc and calipers, air breather and differential can all be removed and refitted even with the unit mounted on the vehicle.

Before positioning the rear axle assembly on the stand for overhauling, drain off the oil by unscrewing the side plug of the axle housing.

Figure 6

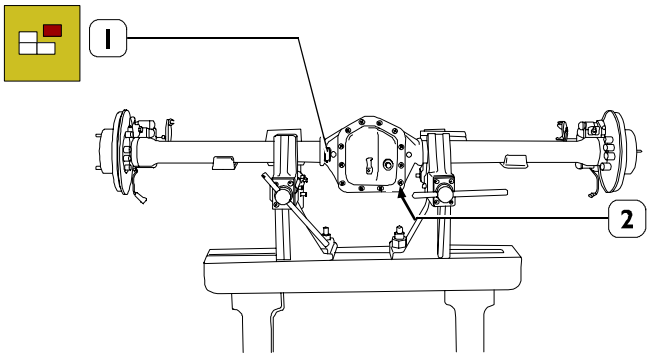

51800

Set the entire rear axle assembly on stand 99322215.

The identification data of the rear axle unit are given on the plate (1) fixed near to the leaf spring attachment support.

525013 Air breather disassembly - assembly

Figure 7

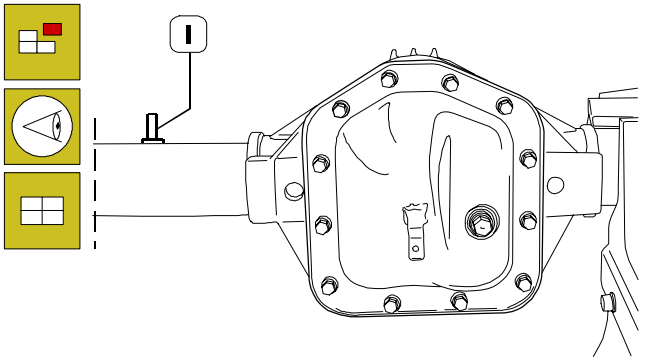

75002

Check that the air breather (1) is not clogged; otherwise, disassemble and clean it thoroughly before refitting.

525030 Wheel hub overhaul

Figure 8

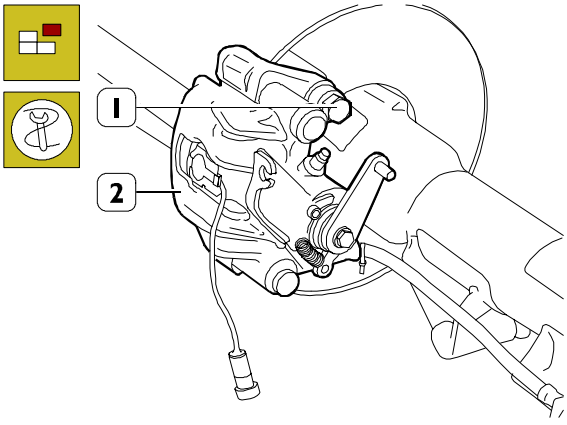

51802

Take out the screws (1) and remove the brake caliper (2) with its brake linings from the mounting.

The caliper must not be violently knocked or dropped.

Prevent the rubber caps coming into contact with sharp metal tools.

Do not dirty or wet the rubber caps with mineral grease or oil.

Do not dirty the pads with liquids or grease.

Do not operate the parking brake lever before mounting on the disc.

This makes the piston come out, decreasing the gap between the two brake linings and jeopardizing wearability on the disc.

Should this be done unexpectedly, it is necessary to take down the brake linings and move the piston back with tool 99372236, taking the precautions given in the BRAKES section.

Figure 9

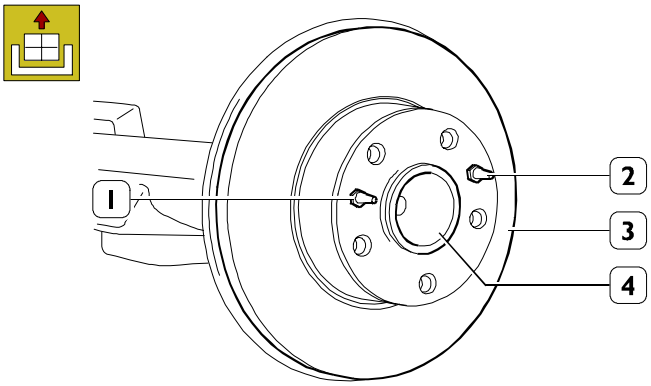

51803

Take out the pins (1 - 2) centring/fixing the brake disc (3) to the drive shaft (4) and remove the brake disc (3).

Figure 10

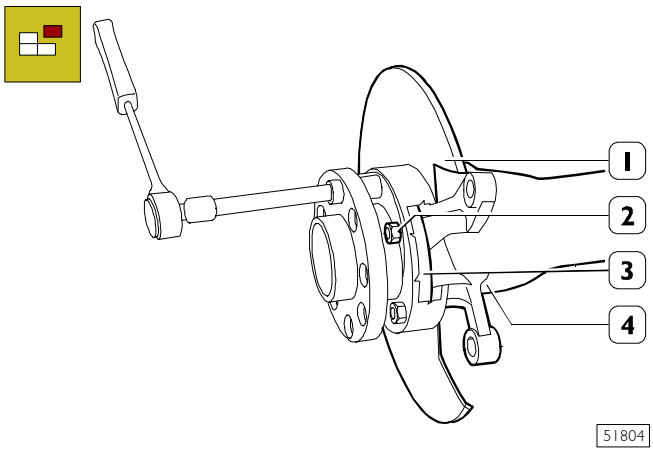

Remove the screws (2) securing the guard (1) and cover (3) to the axle housing (4).

Figure 11

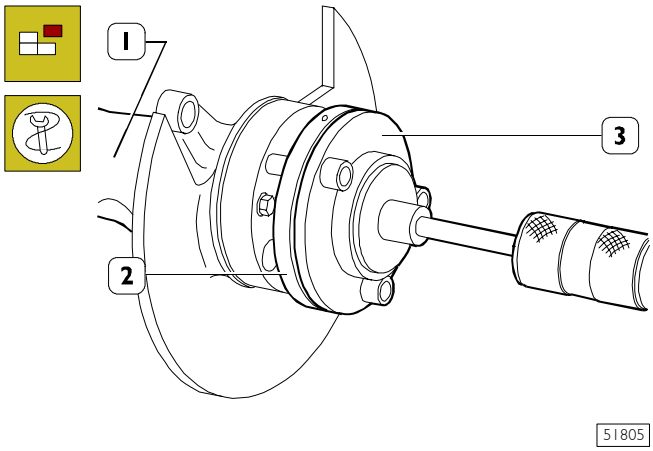

Extract the drive shaft (2) from the axle housing (1).

If this proves difficult, use tool 99340204 (3) applied as shown in the figure to extract the drive shaft (2).

Figure 12

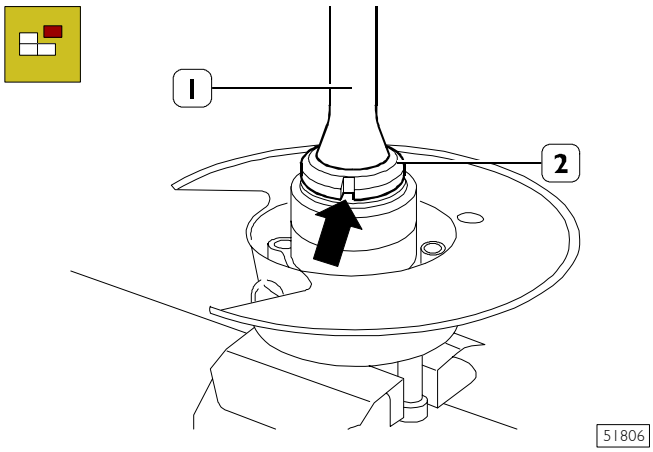

Clamp the drive shaft (1) in a vice.

Lift the deformation (⇒) of the washer on the ring nut (2).

Figure 13

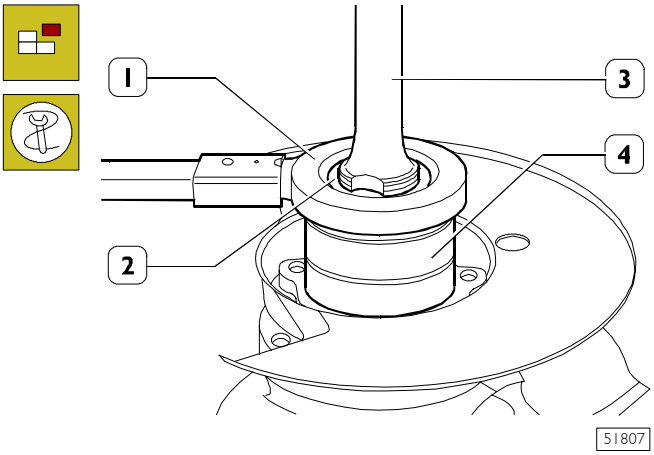

Using the wrench 99355176 (1), remove the ring nut (2) securing the bearing (4) to the drive shaft (3).

Figure 14

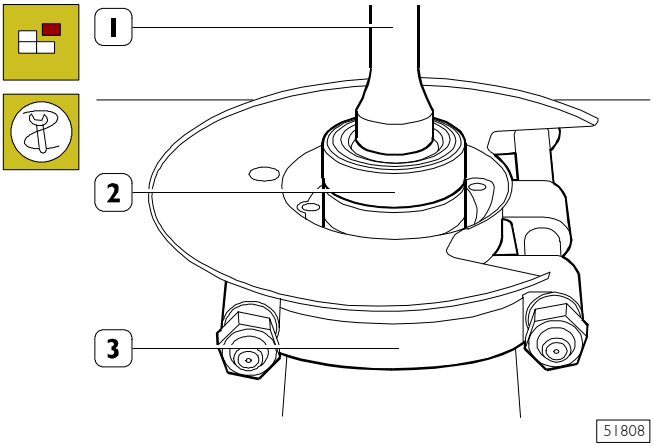

Set the drive shaft (1) suitably on the hydraulic press and, with the extractor 99348001 (3), extract the bearing (2).

Figure 15

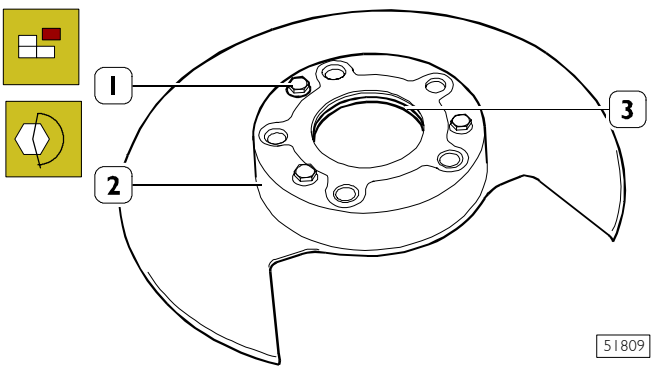

Take out the screw (1) and remove the cover (3) from the guard (2).

Assembly

Position the guard (2) on the cover (3) and tighten the fixing screws (1) to the required torque.

Figure 16

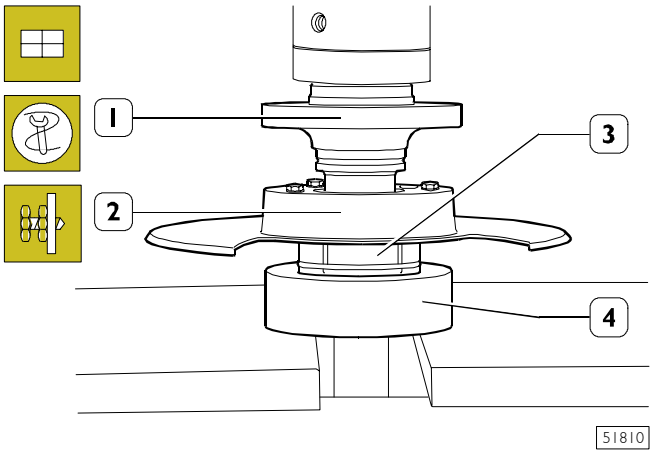

Set the tool 99370241 (4) on the press and position the bearing (3) and guard (2) with the cover on it.

Put the drive shaft (1) into the bearing (3) and with the action of the press (driving load 3300 ÷ 18000 N) insert it to the limit.

The bearing (3) must not be heated.

Figure 17

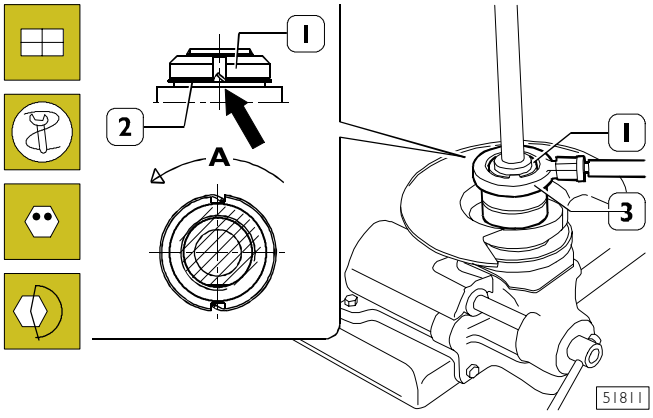

Fit the washer (2) and ring nut (1).

Using the wrench 99355176 (3) tighten the ring nut (1) to the required torque.

Notch the washer (2) (⇒) on the milling of the ring nut (1) as shown in the figure.

Figure 18

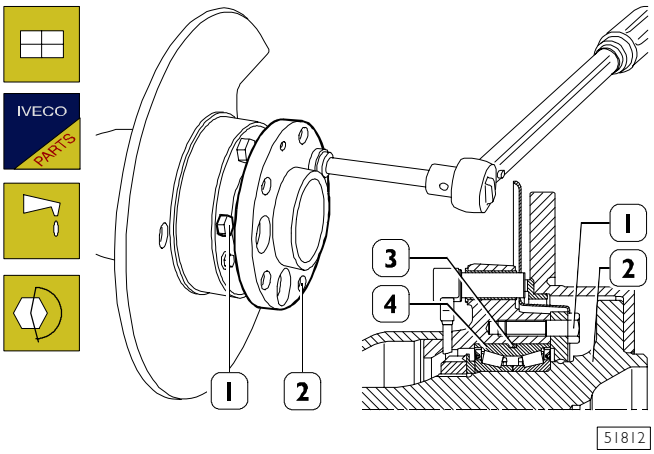

Mount a new seal (3) onto the annular groove of the bearing (4).

Lubricate the seal (3) and the external surface of the bearing (4) with TUTELA MR3 grease.

Fit the drive shaft (2) assembled in this way into the axle housing.

Tighten fixing screws (1) to the prescribed torque.

Figure 19

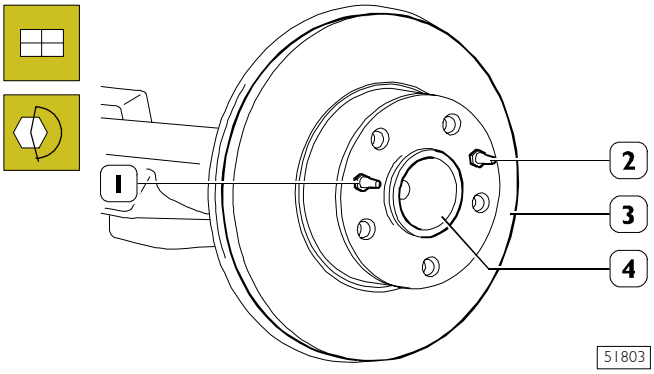

Mount the brake disc (3) onto the drive shaft (4) and tighten the fixing pins (1 - 2) to the required torque.

Figure 20

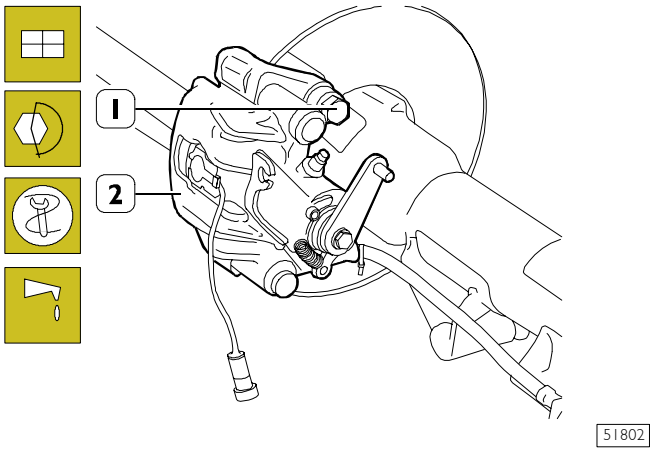

The brake lining with the wear indicator must be mounted on the piston side of the brake caliper.

Rest the brake caliper (2) with the brake linings on the mounting.

Should brake calliper piston be moved backward, use tool 99372236 and follow the recommendations set out in the BRAKES section.

Tighten the screws (1) securing the caliper (2) to the required torque.

After assembly, fill the axle housing with TUTELA W140/M - DA oil in the required quantity and grade.

526210 REPAIRING THE DIFFERENTIAL

Disassembling the differential unit

Before repairing the differential it is necessary to drain off the oil and dismantle the drive shafts, as described under the heading of overhauling the wheel hub (operation 525030).

Figure 21

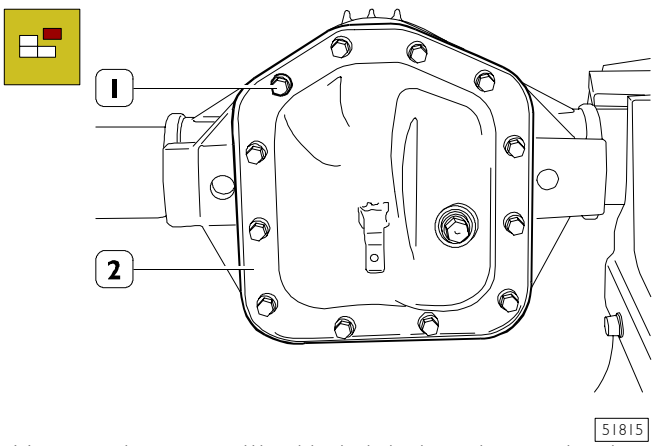

Unscrew the screws (1) with their lock washers and spring washers (if any) and take off the gearing inspection cover (2) with its gasket (if present).

Figure 22

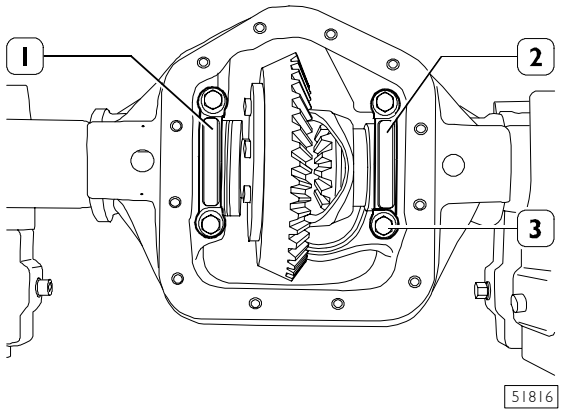

Mark the position of the caps (1 and 2), take out the screws (3) and remove them.

Figure 23

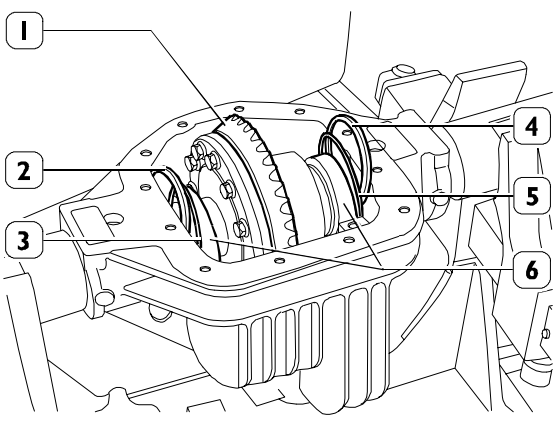

Extract the differential unit (1) from the axle housing.

Note the assembly position of the adjustment rings (2) of the spacers (3) and of the external rings (4) of the tapered roller bearings to position them for assembly in the same position.

Gear housing removal

Figure 24

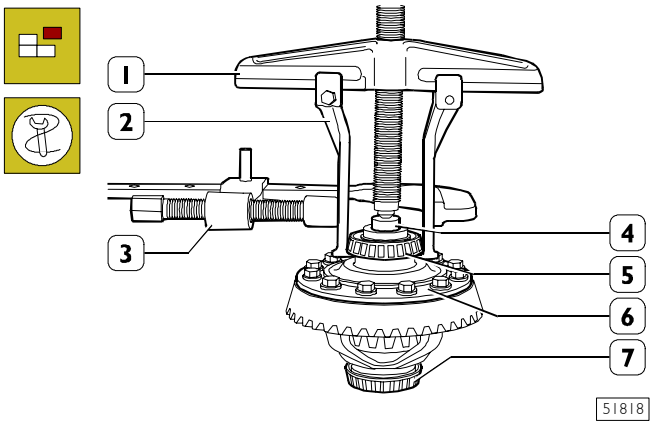

Use tool 99341003 (1), brackets 99341009 (2), clamp 99341015 (3) and reaction block 99345057 (4) to remove taper roller bearing inner rings (5 - 7) from gear housing (6).

Figure 25

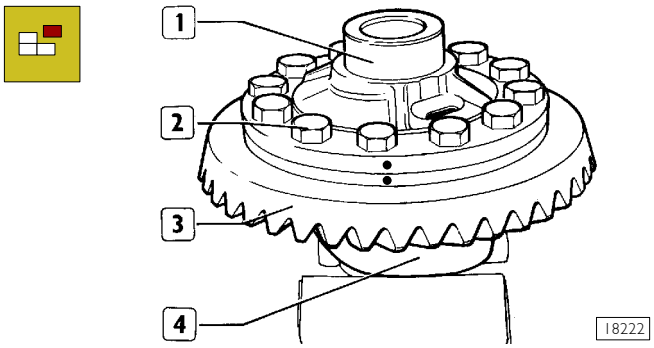

Mark cover (1) and gear housing (4).

Loosen screws (2), remove ring bevel gear (3) and gear housing (4) cover (1).

Figure 26

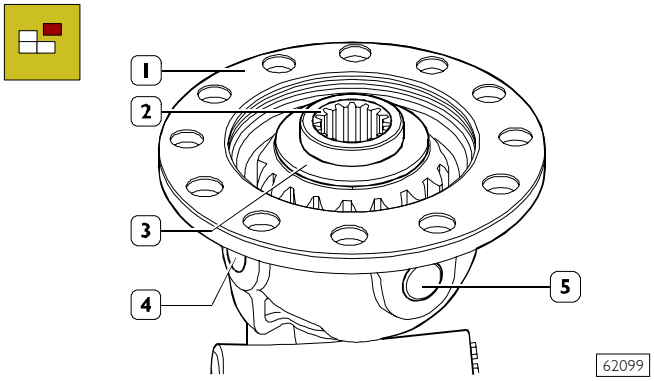

Remove from gear housing (1) the sun gear (2) on cover side including shoulder washer (3).
Use a universal beater to remove the long pin (4) and the two short pins (5) from gear housing (1).

Figure 27

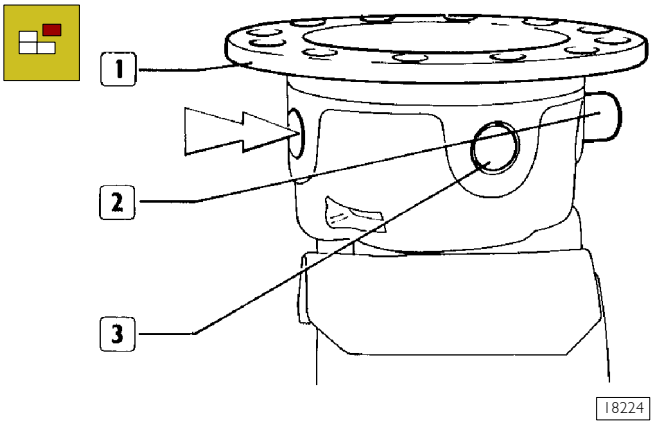

Use a universal beater to remove the long pin (2) and the two short pins (3) from gear housing (1).

Figure 28

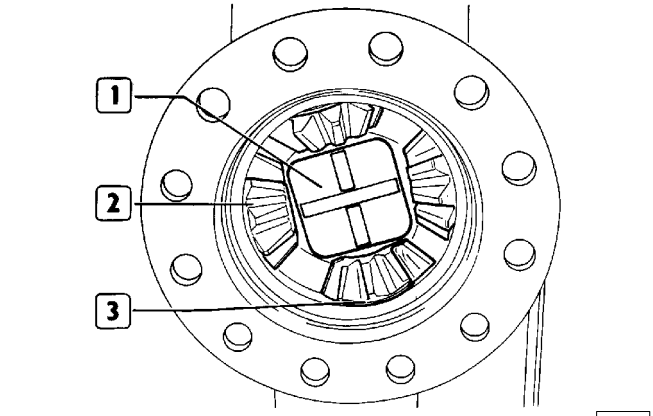

Remove the spider (1) and the 4 planetary gears (2) with the relevant shoulder washers (3) from the gear housing.

Figure 29

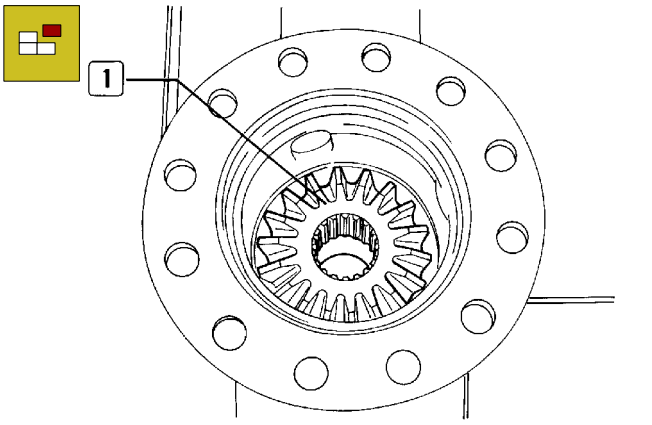

Remove the sun gear (1) on gear housing side and the shoulder washer.

Figure 30

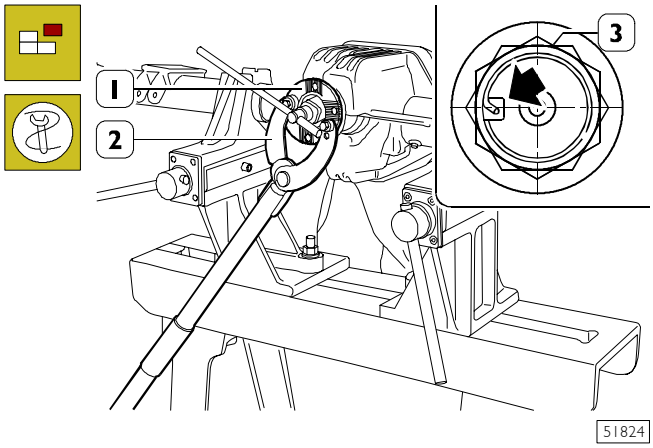

Raise the securing ring (⇒) on the flange (1) nut (3).

Using tool 99370317 (2), block rotation of the coupling (1).

Remove the nut (3).

Figure 31

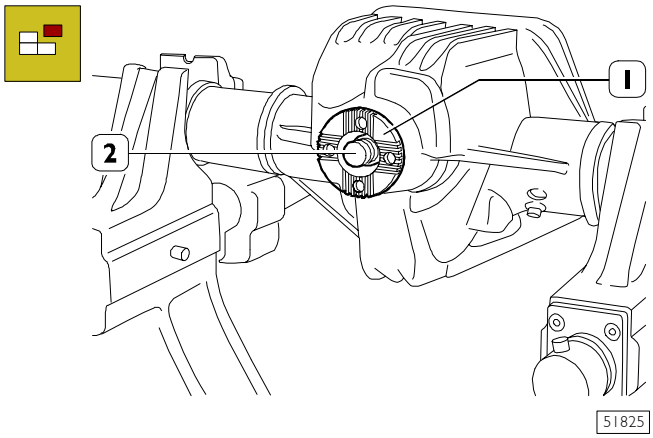

Extract from the bevel pinion (2) on the flange (1).

Figure 32

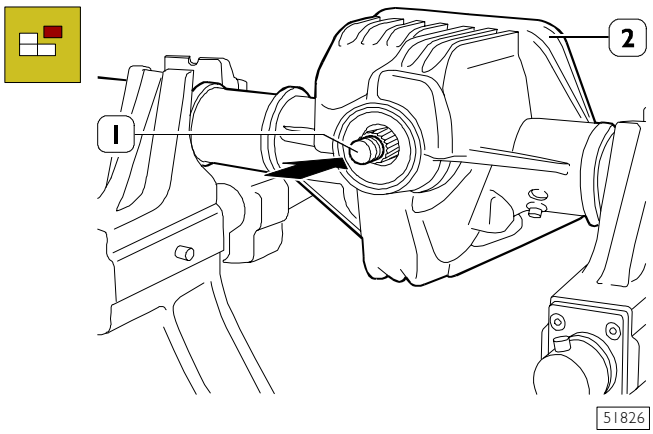

Using a bronze punch, strike in the direction shown by the arrow to eject the bevel pinion (1), with the rear bearing, the fixed spacer and adjustment ring from the axle housing (2).

Figure 33

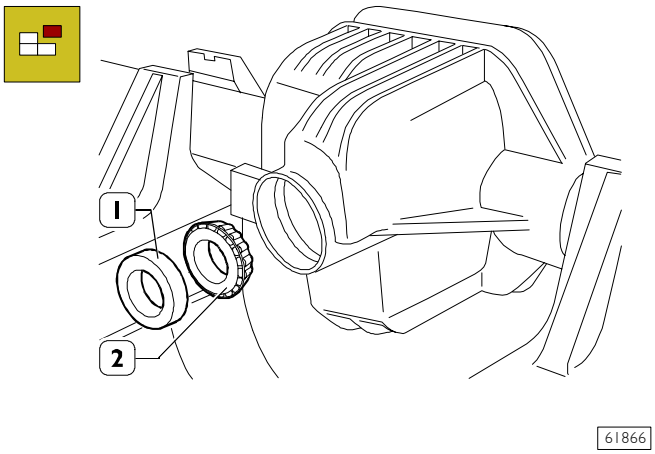

Remove the seal (1) and the internal ring (2) of the front bearing.

Figure 34

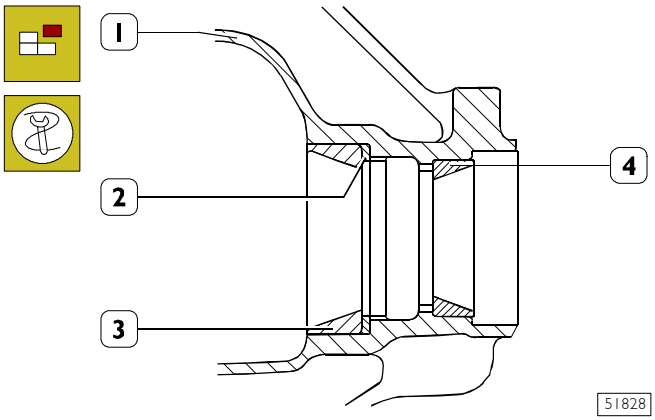

Use a punch to remove the external rings (3 - 4) of the tapered roller bearings from the axle housing (1) and take out the adjustment shim (2).

Figure 35

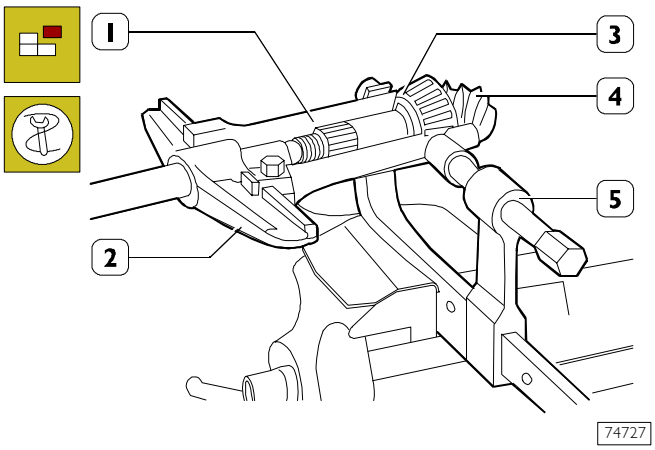

With axle 99341003 (2), brackets 99341011 (1), press 99341015 (5) extract the internal ring (3) on the bevel pinion (4).

Figure 36

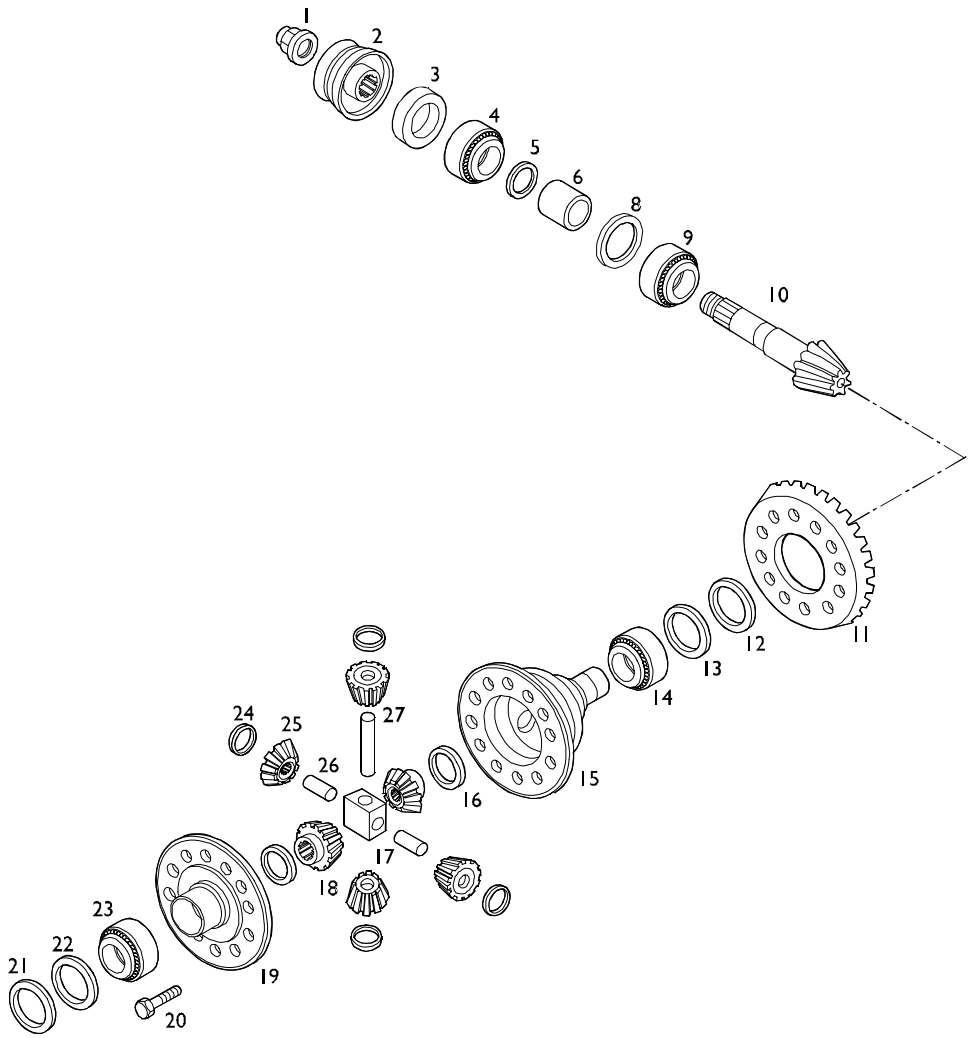

DIFFERENTIAL UNIT COMPONENTS

1. Nut - 2. Transmission coupling sleeve - 3. Seal ring - 4. Front bearing - 5. Pinion shim ring - 6. Fixed spacer - 7. Fixed ring - 8. Adjuster ring - 9. Rear bearing - 10. Bevel pinion - 11. Bevel ring - 12. Fixed ring - 13. Adjuster ring - 14. Bearing - 15. Gear casing - 16. Crown wheel thrust washer - 17. Cross - 18. Crown wheel - 19. Gear casing - 20. Screw - 21. Fixed ring - 22. Adjuster ring - 23. Bearing - 24. Planetary gear thrust washer - 25. Planetary gear - 26. Short pin - 27. Long pin.

Checking the parts comprising the differential

Carefully clean the single components of the differential locking.
Lubricate the bearings and rotate the roller cage freely; rotation must be even and without signs of stiffness. Check the support surfaces of the ring bevel gear and the striking surface of the half-casing so that the ring bevel gear fits perfectly. Deformations of such parts, could determine vibration of the ring bevel gear fastening screws, thus compromising the perfect operation of the unit.

Carefully clean all the threads in order to obtain exact adjustments and accurate tightening torque.

Check that the splined section for the flange-pinion connection is not badly worn, if it is, replace the pinion.

If it is necessary to replace the ring bevel gear or pinion, replace both parts since they are supplied in pairs.

Check the planetary gears with their shoulder washers, the pin and the crown wheels with their shoulder washers.

Replace all the sealing elements, the bevel pinion retaining nut and the gear housing bearing adjustment ring nut with new parts.

Assembly

The tapered roller bearings are supplied as spare parts, lubricated with rustproof oil.

They must not be washed or heated for assembly.

The differential housing support bearings must both be from the same supplier.

Assembly of gear housing

Figure 37

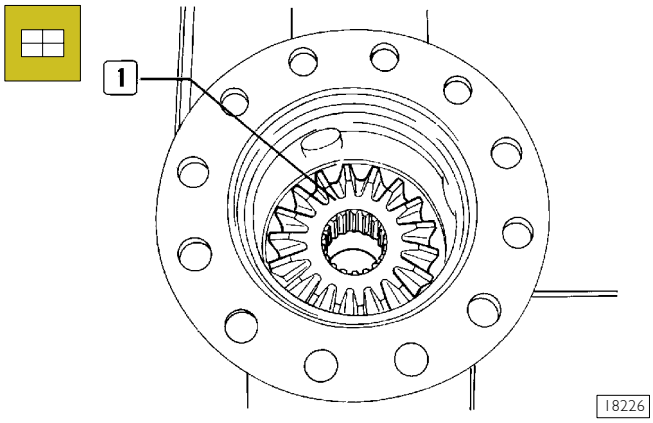

Position the crown wheel (1), gear housing side, complete with shoulder washer, into its own housing.

Figure 38

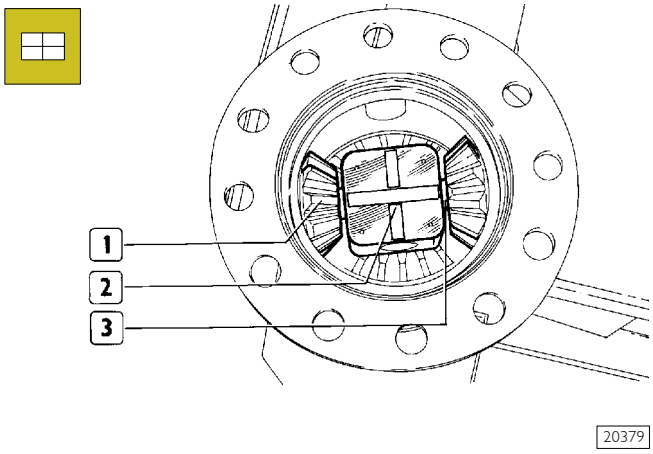

Position the two planetary gears (1) complete with shoulder washers, spider (2) and then insert the long pin (3).

Figure 39

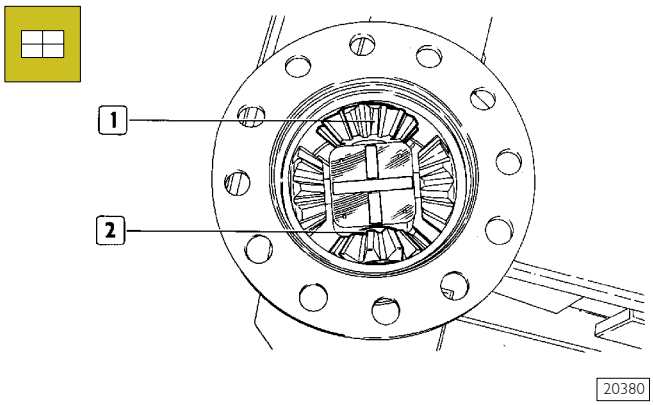

Position the other two planetary gears (1) complete with shoulder washers and then insert the two short pins (2).
Rotate the planetary gears-crown wheel unit and check that it is free without stiffness.
Assemble the other crown wheel complete with shoulder washer.

Figure 40

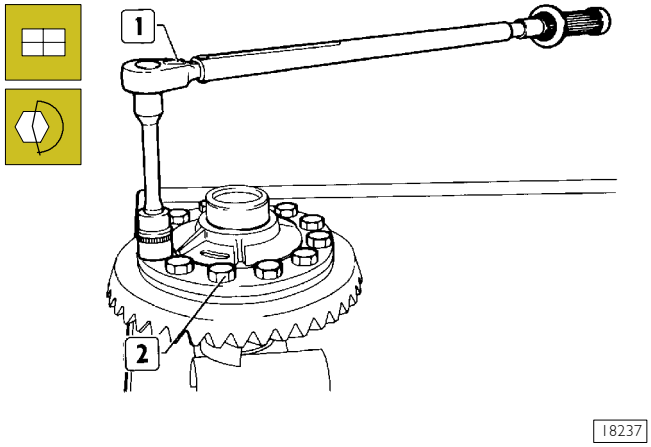

Assemble the cover and make the marks made during disassembly coincide. Assemble the ring bevel gear and fasten this to the half-casing by means of the fixing screws.
By means of a dynamometric wrench (1) tighten the fixing screws (2) to the required tightening torque.

Figure 41

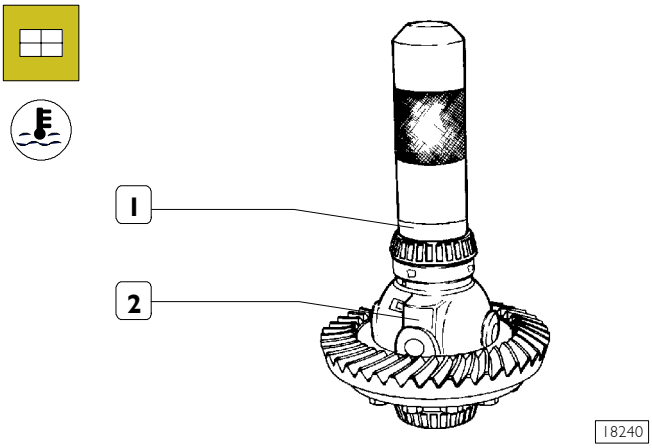

Only for axles with differential lock.
Using tool 99305121, heat thrust ring (1) to a temperature of 120°C ÷ 150°C for 15' and fit on the gear casing (2) from the side with the differential lock.

Figure 42

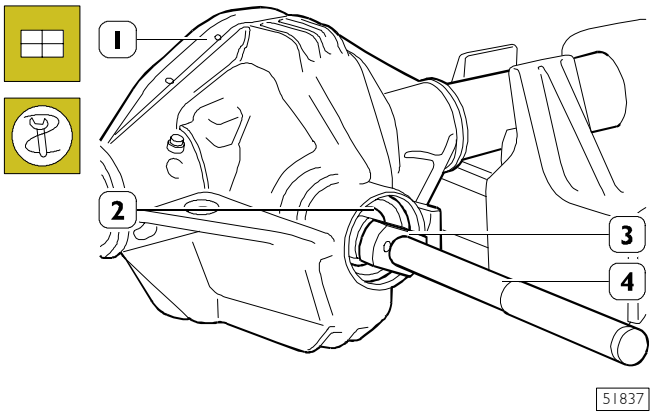

Using the punch 99374091 (3) and grip 99370006 (4), mount the external ring (2) of the tapered roller bearing in the axle housing (1).

New bearings are lubricated with rustproof oil and must therefore not be washed or heated for assembly.

Figure 43

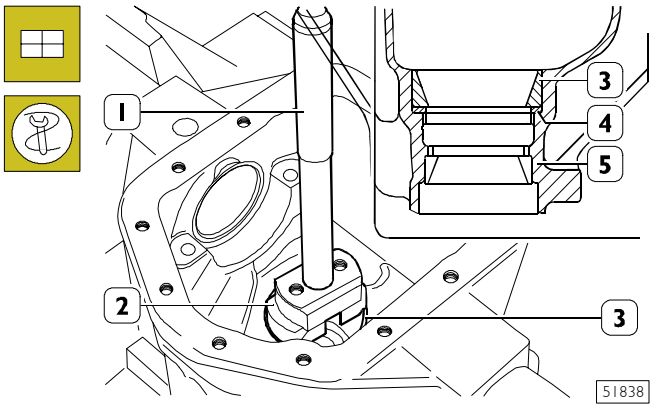

Set adjusting ring (4), removed at disassembling, into rear axle casing (5).
Using the punch 99374092 (2) and grip 99370007 (1), mount the external ring (3) of the tapered roller bearing.

Assembling the bevel pinion assembly

Figure 44

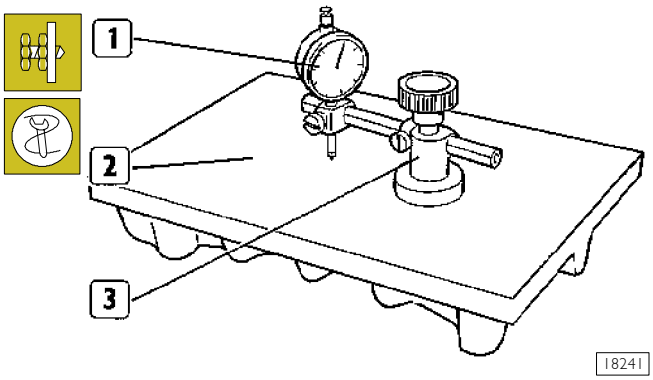

On a surface plate (2), zero a dial gauge (1) set on the mounting 99395728 (3) and pre-load it slightly.

Figure 45

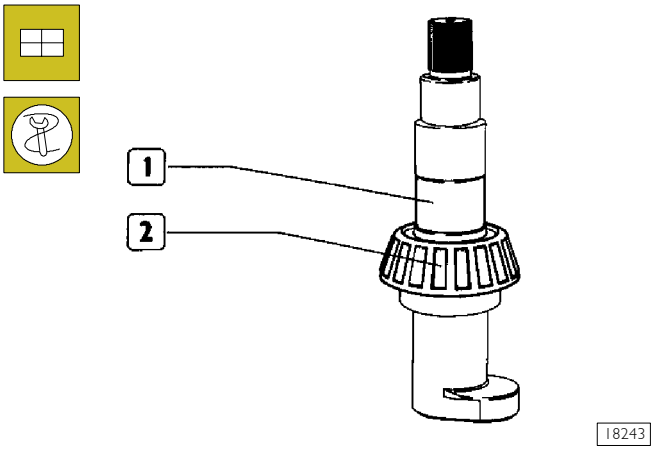

Mount the internal ring (2) of the tapered roller bearing on the dummy pinion 99370286 (1) without the washer supplied.

Figure 46

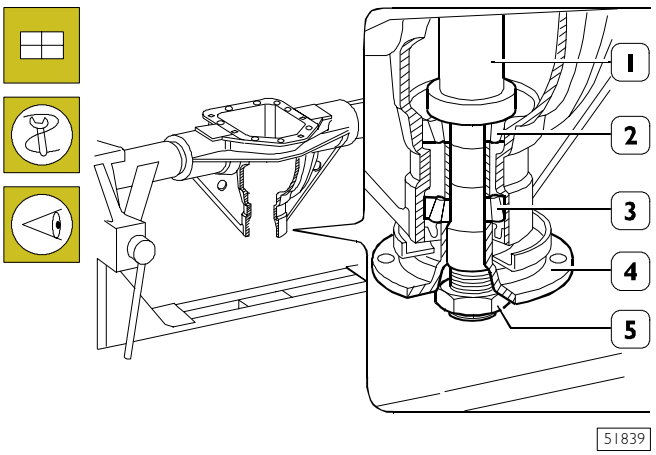

Position the dummy pinion 99370286 (1), assembled as shown in Figure 45, on the external ring (2) of the tapered roller bearing.

On the opposite side, fit the taper bearing internal ring (3) on the dummy pinion (1) and the transmission shaft flange (4) .

Screw on the nut (5) so that the dummy pinion turns freely with no end float.

Figure 47

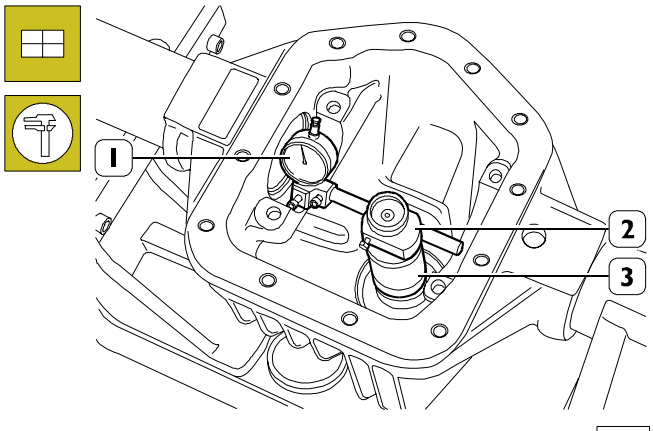

51840

Fit the mounting 99395728 (2) with the dial gauge (1) on the dummy pinion 99370286 (3).

Orientate the, previously zeroed, dial gauge so as to position the rod on the lowest portion of the seat of the bearing supporting the gear housing and note the difference **A1**.

Repeat the same operation on the seat of the other bearing and note the difference **A2**.

Thickness **S** to be added to adjusting ring thickness (4, Figure 49) used for measuring, for pinion positioning is obtained by the following formula:

$$\mathbf{S} = \frac{A1 + A2}{2} - (\pm B)$$

A1 indicates the value measured on the right-hand seat.

A2 indicates the value measured on the left-hand seat.

B indicates the value marked on the bevel pinion (see Figure 49).

For example:

$$\mathbf{S} = \frac{1.05 + 1.10}{2} - (-0.05) = \frac{2.15}{2} + 0.05 = 1.125$$

Figure 48

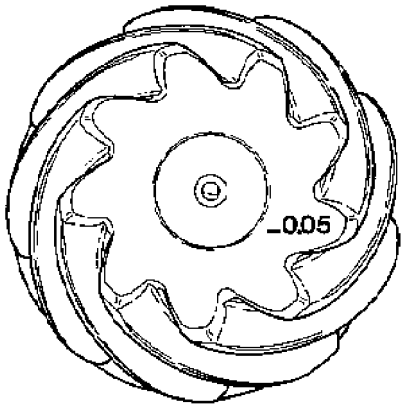

18246

If the value marked on the pinion is preceded by a positive sign (+), it must be subtracted from the value of the sum divided by two for both seats, whereas it has to be added if it is preceded by a negative sign (-).

Unscrew the retaining nut, the transmission connection flange and remove it and the bearing from the dummy pinion.

Remove the dummy pinion with the mounting 99395728, dial gauge and rear bearing from the axle housing.

Figure 49

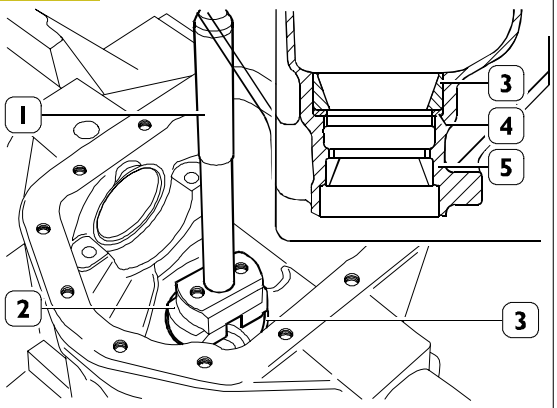

51838

If required, replace adjusting ring (4) with a new one having the calculated thickness, after removing bearing outer ring (3) from rear axle casing (5) by beater.

Then fit the new adjusting ring (4) into rear axle casing (5).

Using the punch 99374092 (2) and grip 99370007 (1), mount the external ring (3) of the tapered roller bearing.

Figure 50

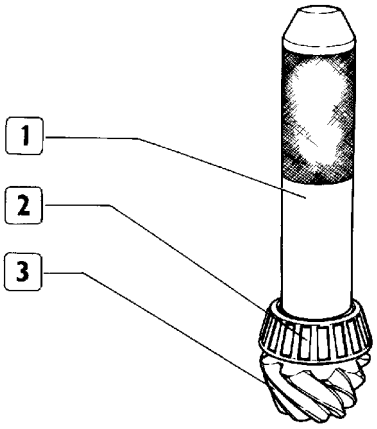

18251

Using a suitable punch (1) and a hydraulic press, mount the internal ring (2) of the tapered roller bearing on the bevel pinion (3).

Figure 51

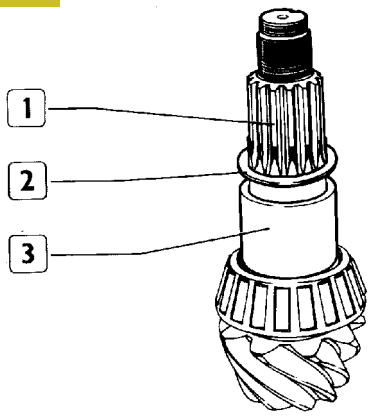

18252

Position the fixed spacer (3) and the adjustment ring (2), used previously to obtain the required rolling torque, on the bevel pinion (1).

Figure 52

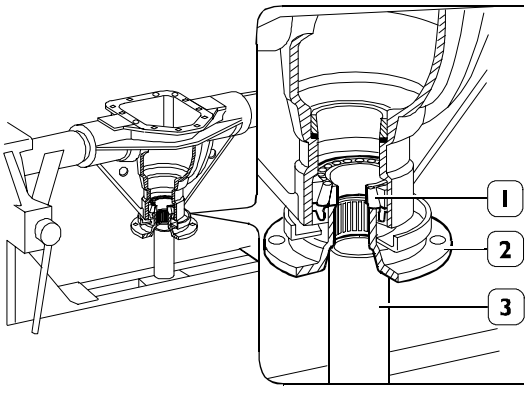

62097

Position the axle casing as indicated in the figure.
Fit the taper bearing internal ring (1) and the transmission shaft flange (2).
Position a suitable pipe (3) on the stand so that the flange (2) and the taper bearing internal ring (1) are correctly supported.

Figure 53

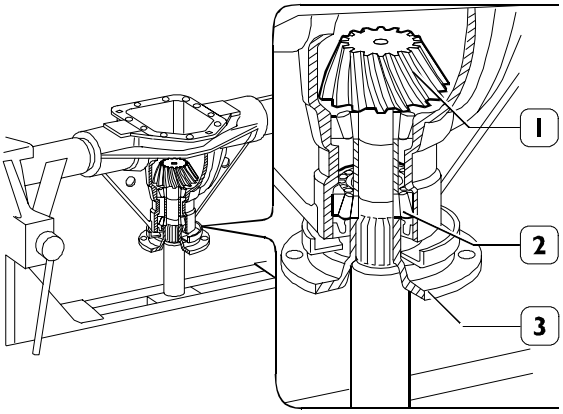

51845

Mount the bevel pinion (1) in the axle housing so as to enter the internal ring (2) of the tapered roller bearing.

Tap on the end of the pinion (1) so that the transmission shaft flange retaining nut (3) can be fitted.

Figure 54

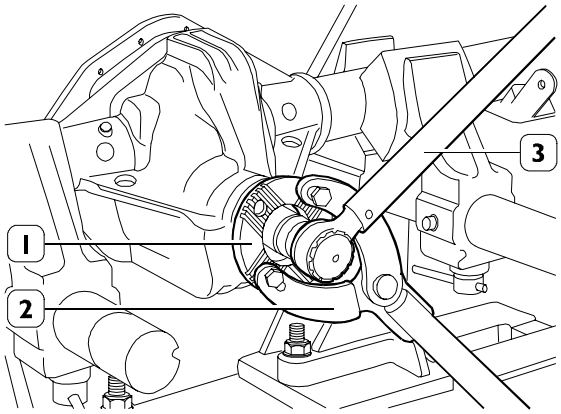

51846

Use tool 99370317 (2) to prevent the flange (1) from rotating.

Tighten the bevel pinion retainer nut to the required torque with a torque wrench (3).

Figure 55

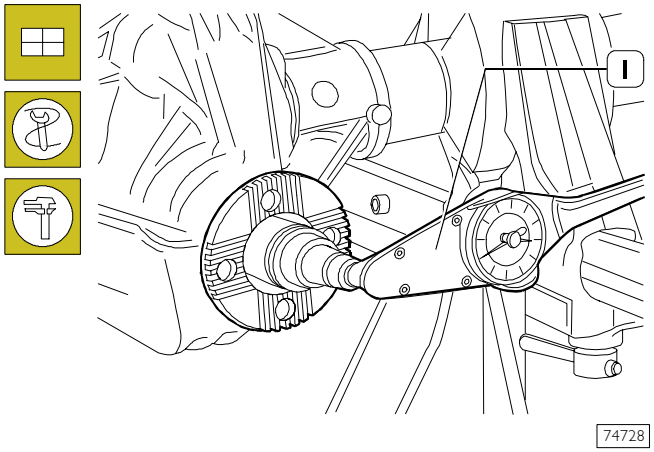

Using the torque wrench 99389819 (1), measure the rolling torque of the bevel pinion.

The rolling torque must be measured at an ambient temperature of 25°C, making the pinion turn at a speed of 50 rpm after it has made 10 turns.

If the reading differs from the prescribed value, disassemble the pinion (1, Figure 53), replace the adjuster ring (2, Figure 51) with a ring of the correct thickness.

Refit the pinion and repeat the rolling torque check.

Assembly of differential unit

Figure 56

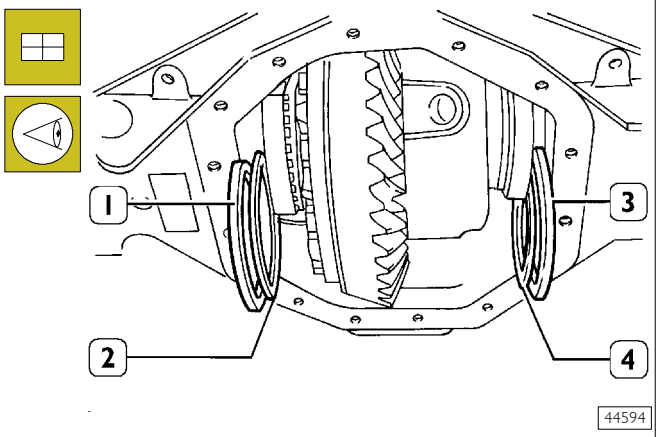

fit the differential unit and support bearings in the axle casing.

Refit the spacers and adjuster rings in exactly the original positions and in the following order: adjuster ring (1), spacer (2 and 4) and adjuster ring (3).

Figure 57

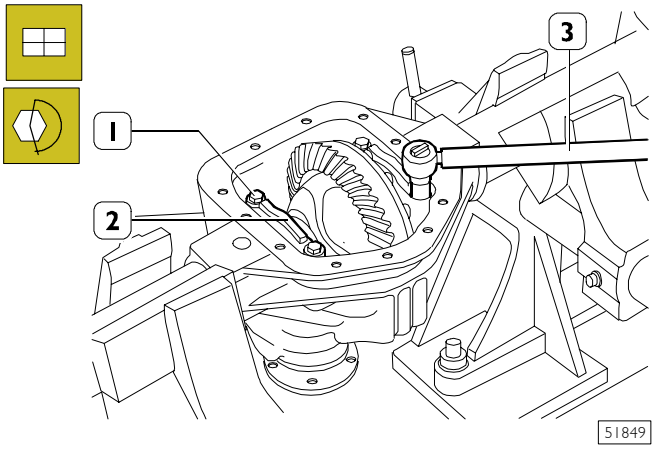

Position the caps (2) making the marks made during disassembly coincide.

Screw on the screws (1) and tighten them to the required torque with the dynamometric wrench (3).

Figure 58

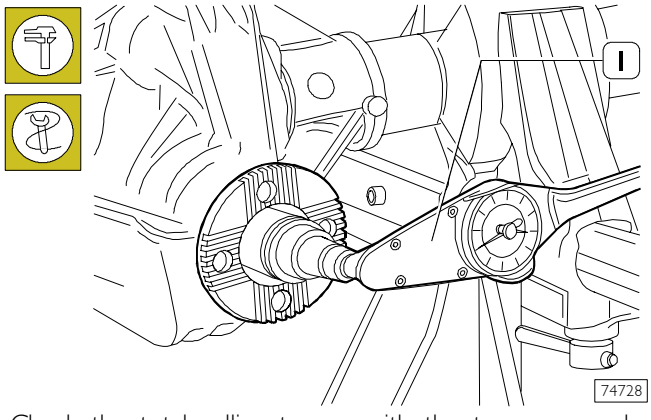

Check the total rolling torque with the torque wrench 99389819 (1).

The rolling torque must be measured at an ambient temperature of 25°C, making the pinion turn at a speed of 50 rpm after it has made 10 turns.

If the value of the measurement is not as required, replace the adjustment rings (1 and 3, Figure 56) with another one of a suitable thickness.

Figure 59

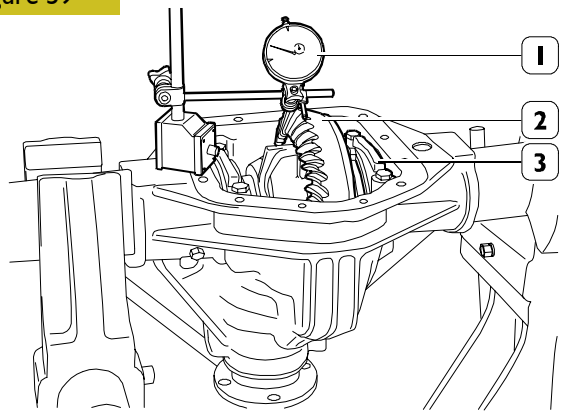

51850

Position the dial gauge 99395684 (1) with a magnetic base and measure the clearance between the pinion and crown wheel on four opposite teeth of the crown wheel (2).

The average of the measurements must equal the required value.

If a different clearance is found, remove the caps (3) again and swap over the assembly position of the adjustment rings (1 and 3, Figure 56).

If this is not sufficient, replace the adjustment rings with ones of a different thickness, but the total thickness must still be the same as that of the adjustment rings removed.

This is so as not to change the total rolling torque.

Apply a thin layer of Prussian blue on ring gear teeth by brush.

Turn the pinion and measure the impression of the contact of the pinion toothing on the crown wheel toothing.

Here we illustrate the possible contacts with the corrections to obtain precise coupling of the crown wheel and pinion.

Figure 60

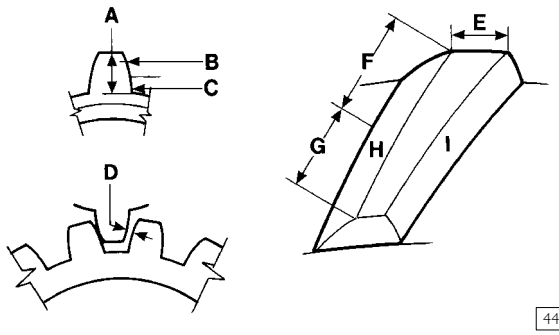

44603

A = Coupling depth
B = Crest
C = Side
D = Play

E = Greater base
F = Heel
G = Top land
H = Contact surface
I = Lateral surface

Figure 61

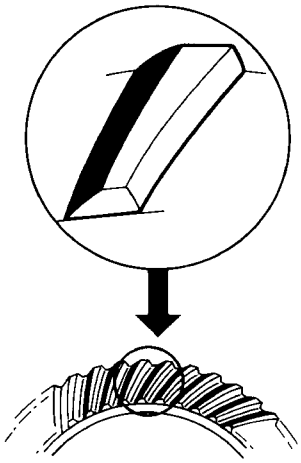

Correct contact

44604

Figure 62

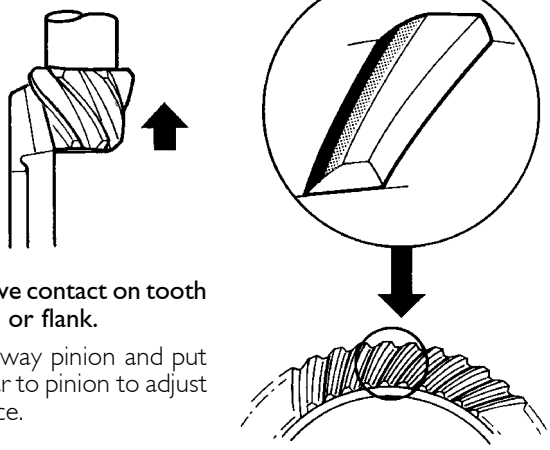

Excessive contact on tooth bottom or flank.

Move away pinion and put ring gear to pinion to adjust clearance.

44605

Figure 63

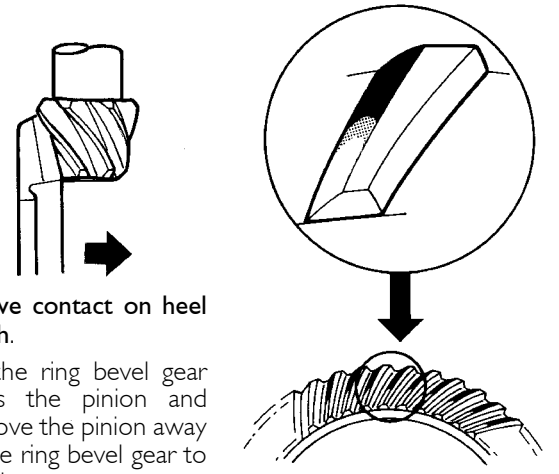

Excessive contact on heel of tooth.

Move the ring bevel gear towards the pinion and then move the pinion away from the ring bevel gear to adjust clearance.

44606

Figure 64

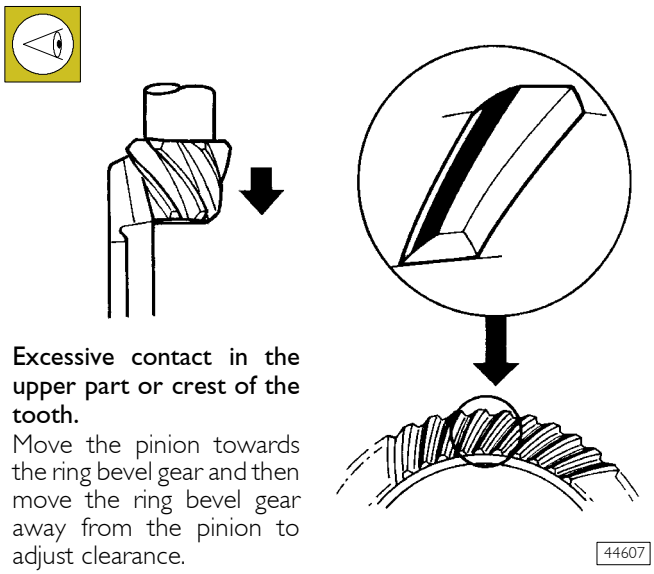

Excessive contact in the upper part or crest of the tooth.

Move the pinion towards the ring bevel gear and then move the ring bevel gear away from the pinion to adjust clearance.

44607

Figure 65

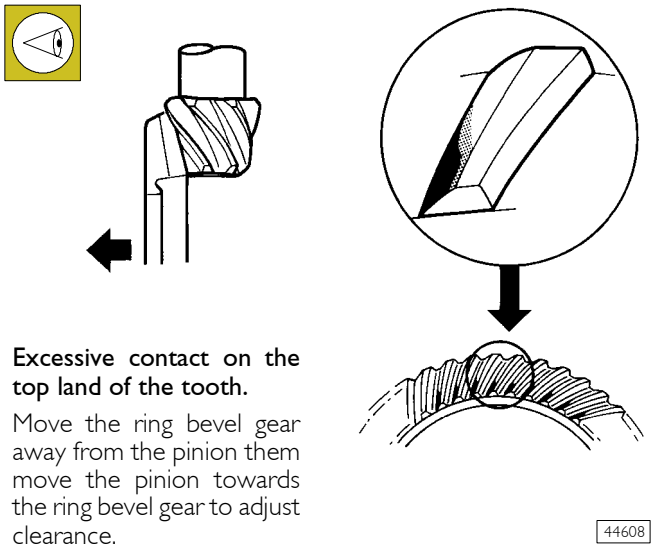

Excessive contact on the top land of the tooth.

Move the ring bevel gear away from the pinion them move the pinion towards the ring bevel gear to adjust clearance.

44608

Figure 66

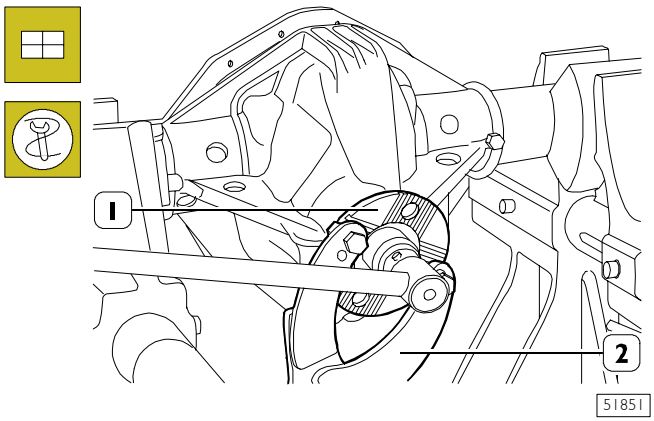

51851

After having determined the prescribed coupling clearance, tool 99370317 (2) prevents the flange (1) from rotating.

Unscrew the retaining nut and extract the flange (1) from the bevel pinion.

Figure 67

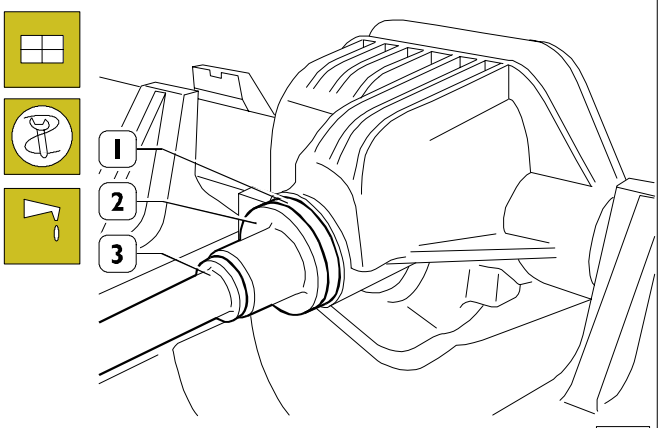

51852

Lubricate the internal lip of the seal (1).

With the key 99374456 (2) and grip 99370006 (3), mount the seal in the axle housing.

Figure 68

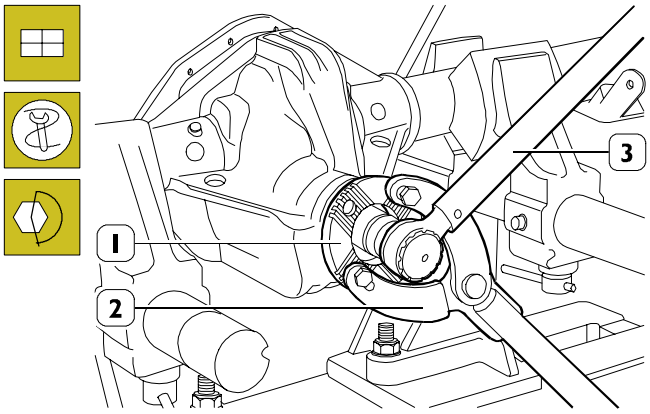

51846

Mount the coupling (1) and with the tool 99370317 (2) block its rotation with the torque wrench (3).

Tighten the bevel pinion retaining nut to the required torque.

Figure 69

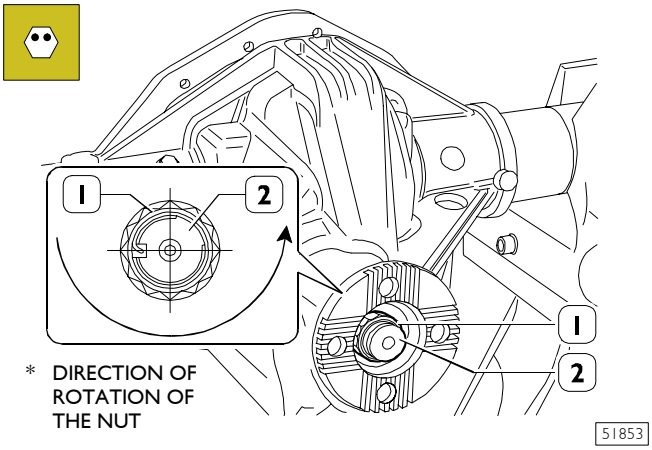

51853

Deform the collar of the nut (1) as shown in the figure at the milling of the bevel pinion (2).

Figure 70

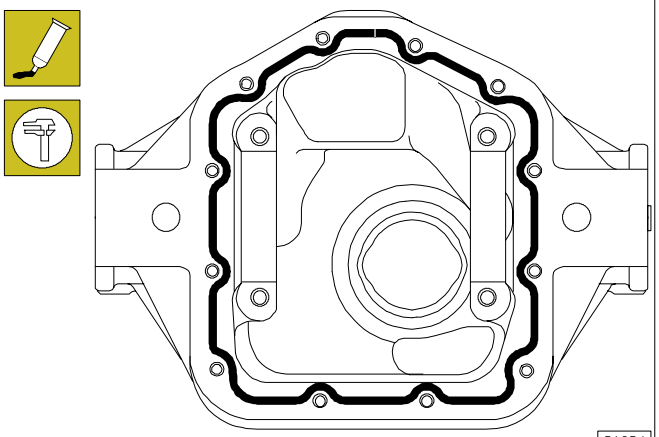

51854

Thoroughly clean the flange of the axle housing.

Apply LOCTITE 5910 sealant on the flange of the axle housing to form a bead of approx. 5 mm diameter.

It must be uniform (no lumps), without any air bubbles, thin areas or gaps.

Any flaws must be corrected in as short a time as possible.

Avoid using too much material to seal the joint.

Too much sealant would tend to come out on both sides of the joint.

After applying the sealant, the joints need to be assembled immediately (10 - 20 minutes).

To seal at a later date, there is product 21623 capable of softening or liquefying the above-mentioned sealant.

It is essential to clean the surface to be sealed in order to achieve good future sealing.

Figure 71

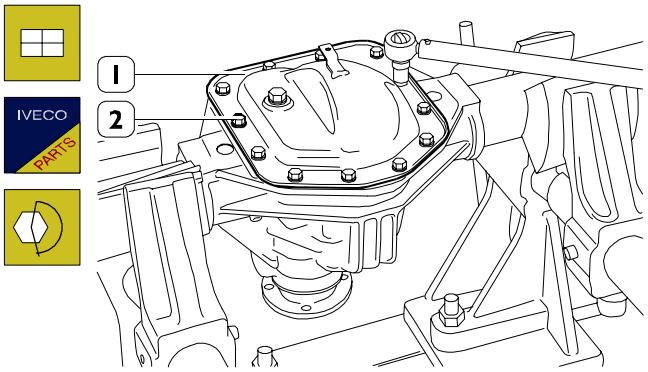

51855

Mount the cover (1) and screw on the screws (2).

- ❑ Flanged screws (for solution without gasket).
- ❑ Screws with washer (for solution with gasket).

Figure 72

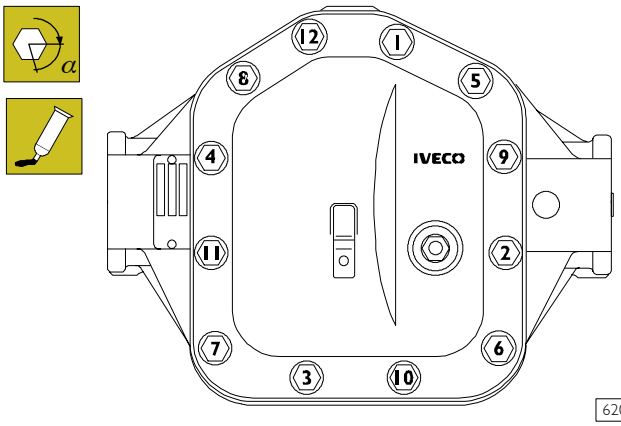

62098

Following the order shown in the figure, tighten the screws to the torque of:

- ❑ flanged screws (for solution without gasket) 80 ÷ 95 Nm;
- ❑ screws with washer (for solution with gasket) 31.5 ÷ 38.5 Nm.

Complete assembly taking the following precautions:

Mount the drive shafts as described under the heading: "525030 overhauling hubs".

Apply LOCTITE 577 thread-locking oil on the oil drain plug thread, screw it into the axle housing, tightening it to the required torque.

Add lubricating oil in the required quantity and grade through the hole.

Apply LOCTITE 577 thread-locking oil on the inspection plug thread, screw it into the axle housing, tightening it to the required torque.

Take the assembly off the stand.

The assembly should be put back on its mounting to prevent the dust guards and/or brake discs from getting damaged.

Rear axles 450311/1 450511

Page

REAR AXLE REMOVAL - REFITTING 37

❑ Removal 37

❑ Refitting 37

DESCRIPTION 39

SPECIFICATIONS AND DATA 40

TIGHTENING TORQUES 43

TOOLS 45

OVERHAULING THE REAR AXLE ASSEMBLY . 48

❑ Wheel hub overhaul 48

❑ Replacing the wheel hub bearing 49

DIFFERENTIAL REPAIR OPERATIONS 52

❑ Disassembly of differential locking 52

❑ Differential locking removal 52

❑ Assembling the differential locking device 52

❑ Differential locking refitting 52

❑ Adjusting the differential locking device 53

❑ Disassembling the differential unit 53

❑ Disassembly of gear housing 54

❑ Assembly of gear housing 56

❑ Differential unit refitting 57

REAR AXLE REMOVAL - REFITTING

Removal

Position the vehicle on level ground and lock the front wheels.

Loosen the nuts securing the rear wheels.

Lift the vehicle at the back and set it on stands.

Put the hydraulic trolley 99321024 under the rear wheels. Take out the nuts securing the wheels.

Unscrew the handbrake adjustment nut (4). Free the cables from the vehicle crosspiece, unhooking the retaining clamps (3).

Unscrew the screws (6) securing the propeller shaft.

Disconnect the electric cables for indicating brake lining wear (2) and (13), for the ABS speed sensors, if present.

Disconnect the braking corrector adjustment tie (14) from the axle housing.

Unscrew the nuts (5) securing the shock absorbers.

Disconnect the oil pipe (1) from the fitting secured to the axle housing.

Unscrew the screws (9) securing the stabilizer bar (10) to the axle.

Disconnect the pipe (16) from the axle housing oil vapour vent.

For axles with differential locking only

Release the spring (17) and remove the differential locking flexible tie (18) support bracket (19) from the axle housing.

Disconnect the electric cable of the differential locking indicator transmitter (15).

For all vehicles

Position a hydraulic jack equipped with the mounting 99370617 under the axle.

Unscrew the nuts (7) of the brackets (8) securing the axle to the leaf spring (11).

Lower the hydraulic jack and extract the axle.

Figure 1

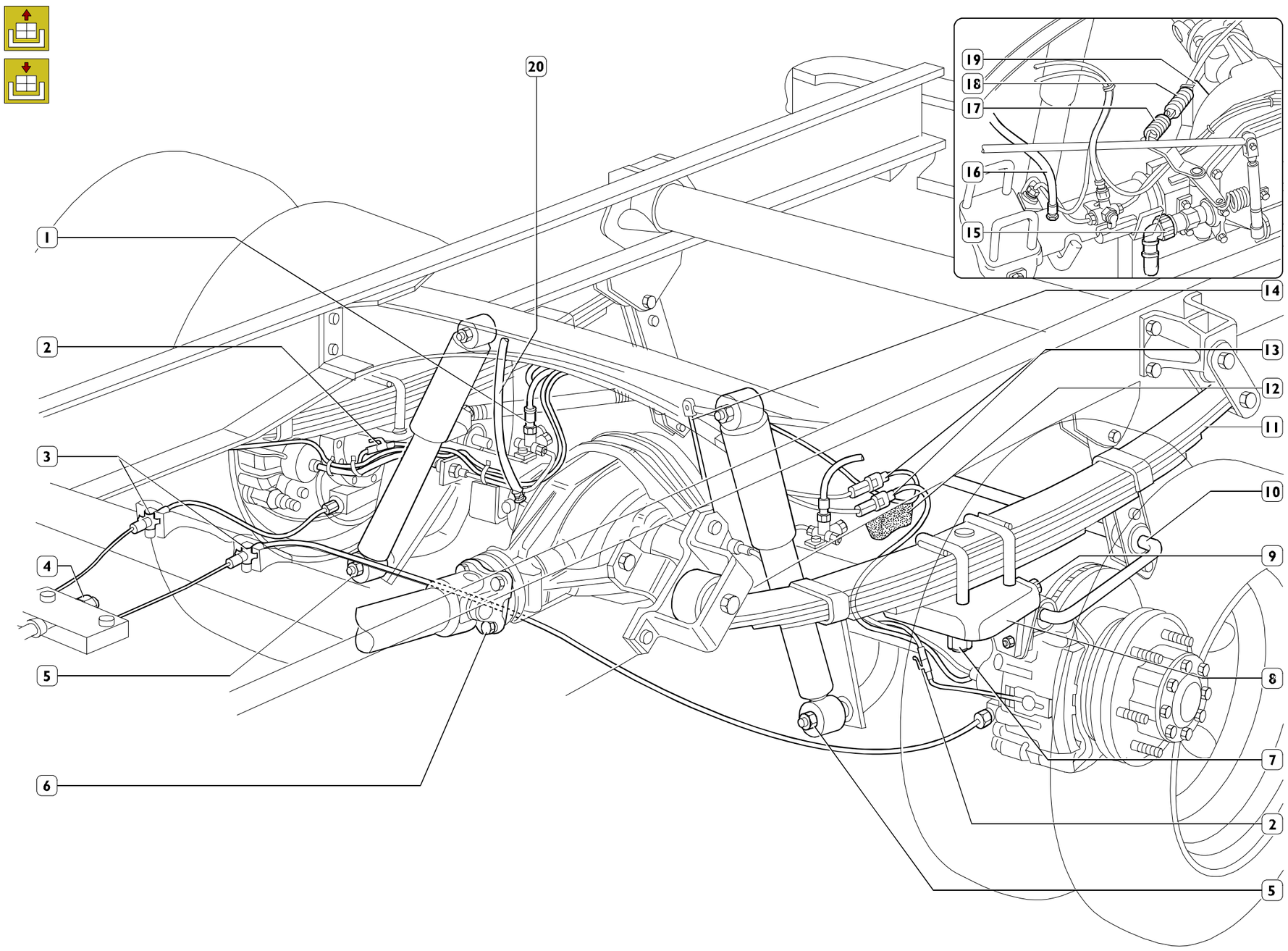

Refitting

For refitting, carry out the operations described for removal in reverse order, observing the required tightening torques for the screws and/or nuts.

Afterwards, check that:

- ❑ Check the thread of the brackets joining the leaf springs to the axle. If there are any irregularities, rectify the thread (operation 500412) or replace the brackets.
- ❑ Bleed the air from the brake hydraulic system as described under the relevant heading (operation 784010).
- ❑ Adjust the handbrake control ties as described under the relevant heading (operation 502710).
- ❑ Lock the nuts or screws to the required tightening torque.
- ❑ The self-locking nuts must not be reused.
- ❑ Check the state of the flexible pads (12) and replace them if they have deteriorated (operation 500417).
- ❑ The lubricating oil in the axle housing should be at the right level.

DESCRIPTION

The rear axle is the load-bearing type with a single reduction using a hypoid crown wheel and pinion.

The axle housing is made of pressed sheet steel with hot pressed arms.

The central portion, seat of the differential unit, is equipped with cooling fins.

The bevel pinion is supported by two pre-lapped tapered roller bearings to hold the bearing pre-load better.

The rolling torque of the bearings of the bevel pinion is adjusted by changing the thickness of the adjustment ring between the two tapered roller bearings.

In addition, it is possible to adjust the position of the bevel pinion with respect to the ring bevel gear by changing the thickness of the ring between the axle housing and the bevel pinion rear bearing external ring.

The gear housing is supported by two tapered roller bearings.

The rolling torque of the bearings is adjusted with adjustment rings between the spacer rings and the external rings of the bearings.

The clearance between pinion and crown wheel is adjusted by changing the thickness and/or position of the adjustment rings, though the total thickness must be the same as that of the adjustment rings removed.

The gear housing is composed of two half-housings.

It may be of two different sizes depending on the ratio of the crown wheel and pinion.

The gearing of the differential is composed of four planetary gears and two crown wheels.

The wheel hubs are keyed, with UNIT BEARINGS lubricated for life, onto the arms of the axle housing.

The bearings need no adjustment.

The brakes are disc brakes with floating brake calipers.

The disc brakes are keyed onto the wheel hubs.

The brake calipers are secured with flanges fixed onto the arms of the axle housing.

The parking brake is the drum type, built into the brake disc.

Figure 2

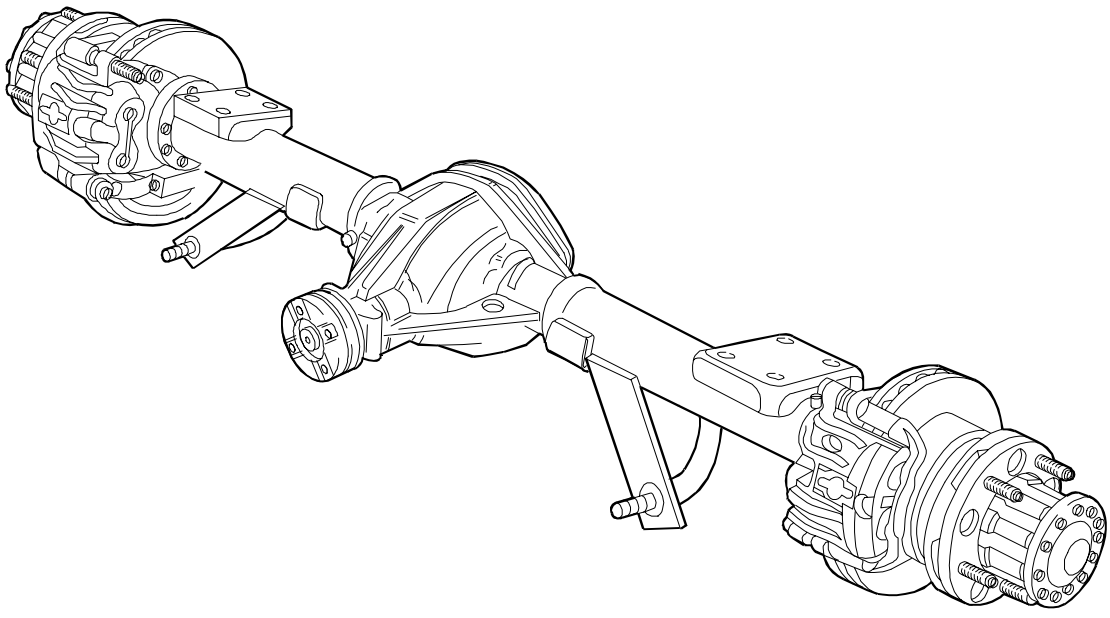

51858

SPECIFICATIONS AND DATA

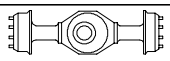	Type of rear axle: Simple reduction type	**450311/1**	**450511**
Electric control mechanical differential locking		on request	
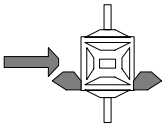	**DIFFERENTIAL UNIT** Reduction bevel gear pair ratio (No. of teeth: pinion/crown)	15/44(1/2.93) - 14/43 (1/3.07) - 13/41 (1/3.15) - 13/43 (1/3.30) - 14/47 (1/3.35) - 13/47 (1/3.61) - 12/47 (1/3.91) - 11/46(1/4.18) - 9/40(1/4.44) - 9/44(1/4.88) - 9/46(1/5.11) - 9/47(1/5.22) - 8/45(1/5.62) - 7/41(1/5.85)	13/43(1/3.30) - 14/47(1/3.35) - 13/47(1/3.61) - 12/47(1/3.91) - 11/46(1/4.18) - 9/40(1/4.44) - 9/44(1/4.88) - 9/47(1/5.22) - 8/45(1/5.62)
	Bevel pinion bearings	2 with taper rollers	
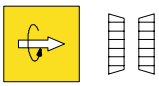	Bevel pinion bearings rolling torque (lubricated bearings and gaskets) Nm New bearings kgm	1.2 ÷ 2.4 0.12 ÷ 0.24	
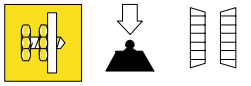	Adjustment of pre-load of bevel pinion bearings	By means of adjustment rings	
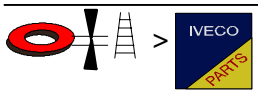	Bevel pinion bearing preload adjusting ring thickness	1 ÷ 1.975 mm with progression of 0.025 mm.	
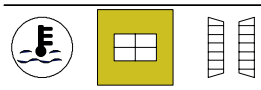	Temperature of assembly of inner bearing ring on bevel pinion	80 °C ÷ 90 °C	
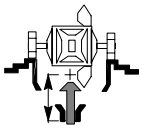	Position of bevel pinion with respect to differential casing	By means of adjustment rings	
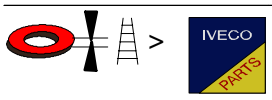	Thickness of adjusting ring placed between bevel pinion bearing and differential carrier.	1 ÷ 1.975 mm with progression of 0.025 mm.	
	Bearings for gear housing	2 with taper rollers	
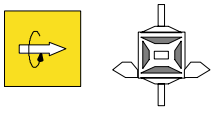	Differential casing bearings rolling torque Nm kgm	2 ÷ 2.8 0.20 ÷ 0.28	
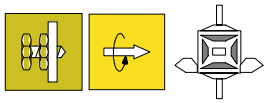	Adjustment of differential casing bearings rolling torque	By means of adjustment rings	
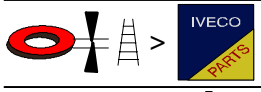	Differential carrier bearing rolling torque adjusting ring thickness	1 ÷ 1.95 mm with progression of 0.05 mm.	
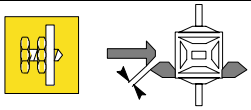	Clearance between pinion and ring bevel gear	0.15 ÷ 0.20 mm	
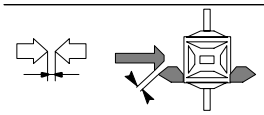	Adjustment of clearance between pinion and ring bevel gear	By means of adjustment rings	
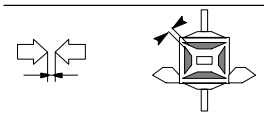	Clearance between planetary and crown wheels	0.12 ÷ 0.18 mm	

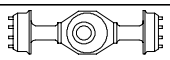	Type of rear axle: Simple reduction type	**450311/1**	**450511**
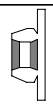	**WHEEL HUBS**		
	Wheel hub bearings	Unit-Bearing	
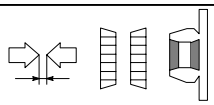	Wheel hub bearings end play	-	
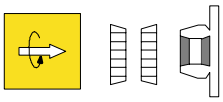	Wheel hub bearings rolling torque Nm kgm	- -	
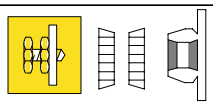	Adjustment of wheel hub bearings end play	Non-adjustable Tightening to fixing ring nut torque	
	Rear axle oil Quantity Litres	**TUTELA W140/M-DA** 1.9	
	Dry rear axle weight : ❑ With ABS kg ❑ Without ABS kg ❑ Max capacity (GRW) kg	- - 3100	- - 3700

Figure 3

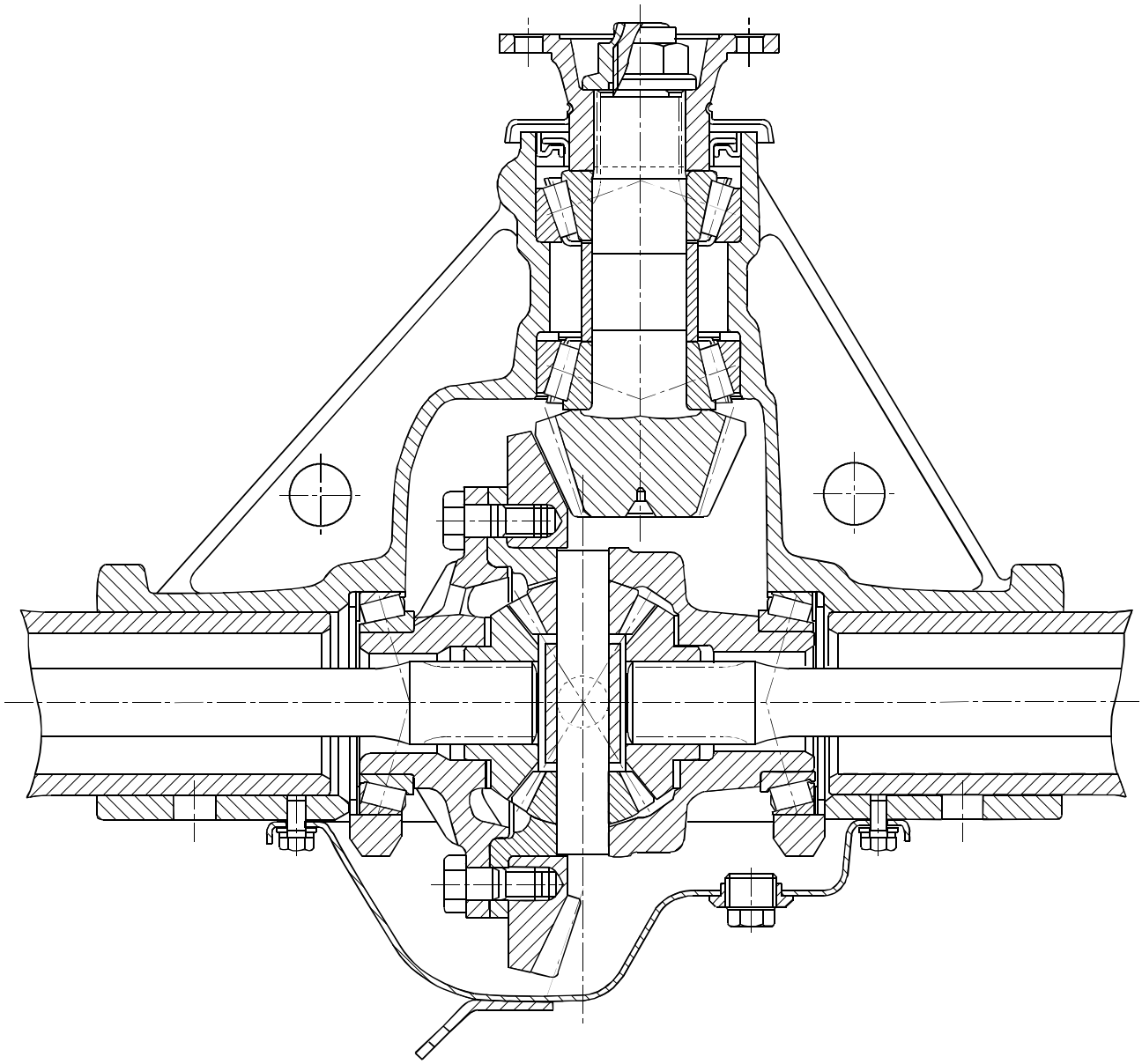

51862

SECTIONAL VIEW OF DIFFERENTIAL

TIGHTENING TORQUES

Figure 4

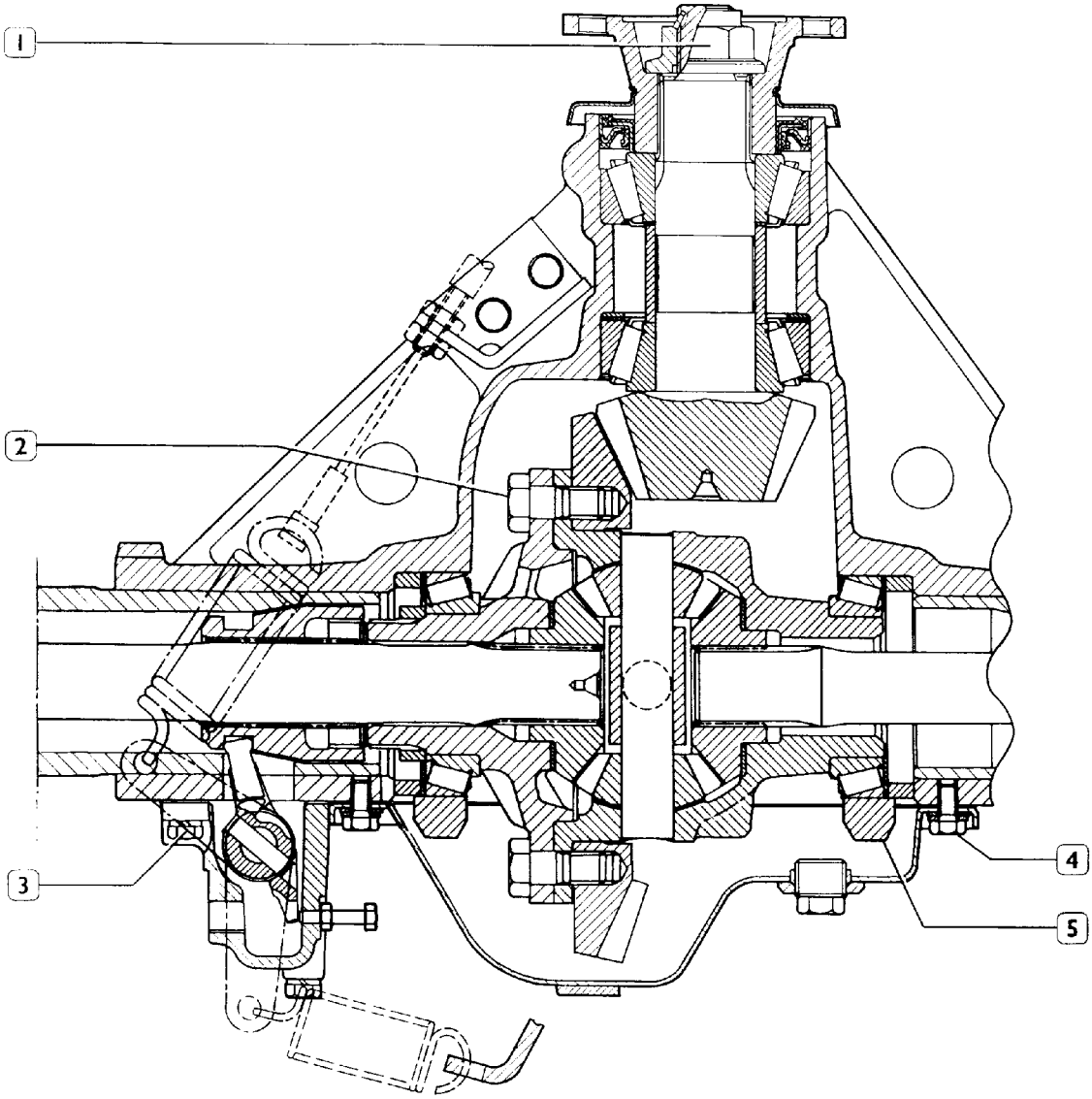

44588

SECTIONAL VIEW OF REAR AXLE DIFFERENTIAL WITH DIFFERENTIAL LOCKING

COMPONENT		TORQUE	
		Nm	kgm
1	Bevel pinion retaining nut	400 ÷ 500	40 ÷ 50
2	Screw securing half-housing and ring bevel gear	200 ÷ 210	20 ÷ 21
3	Screw securing mounting for differential locking to the axle housing or securing cover for differential locking mounting seat cover	21 ÷ 25	2.1 ÷ 2.5
4	Screw securing gearing inspection cover to the axle housing	21 ÷ 26	2.1 ÷ 2.6
5	Screw securing caps to axle housing	96 ÷ 117	9.6 ÷ 1.17

Figure 5

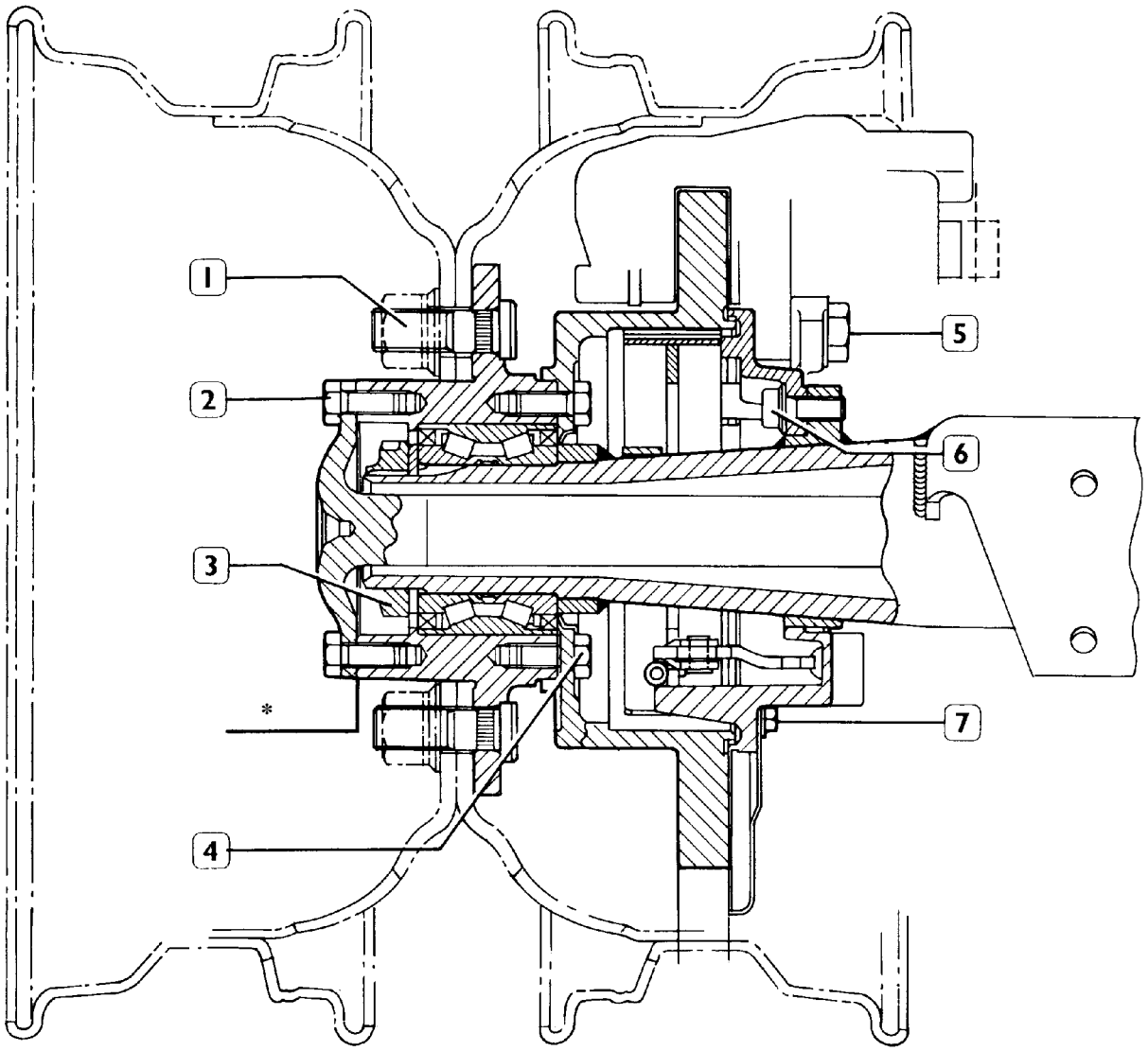

SECTIONAL VIEW OF HUB

COMPONENT		TORQUE	
		Nm	kgm
1	Wheel retaining nut	290 ÷ 349	29 ÷ 34.9
2	Screw securing drive shaft to the wheel hub	63 ÷ 76	6.3 ÷ 7.6
3	Ring nut retaining wheel hub bearing	618 ÷ 667	61.8 ÷ 66.7
4	Screw securing brake disc to wheel hub	69 ÷ 76	6.9 ÷ 7.6
5	Screw securing caliper mounting to shoe mounting	180 ÷ 220	18 ÷ 22
6	Screw securing shoe mounting to axle housing	85 ÷ 97	8.5 ÷ 9.7
7	Screw securing guard	8	0.8
**	Screw securing sensor mounting	5 ÷ 7	0.5 ÷ 0.7

* Spread the surface of the drive shaft - wheel hub union with B-type sealant.
** When assembling the screws securing the timing sensor mounting, apply a few drops of LOCTITE 245 thread-lock onto the thread of the corresponding holes of the bracket welded onto the axle arm.

TOOLS

TOOL NO.		DESCRIPTION
99305121	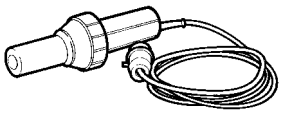	Hot air drier
99321024	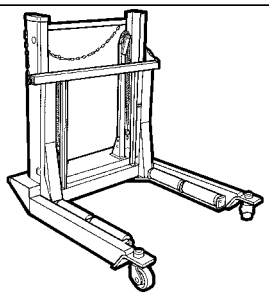	Hydraulic trolley for removing and refitting wheels
99322215	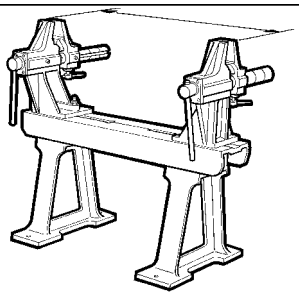	Driving and steering axle overhaul stand
99341001	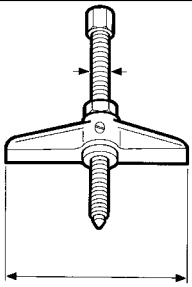	Double effect bridge
99341005		Reaction bridge
99341010	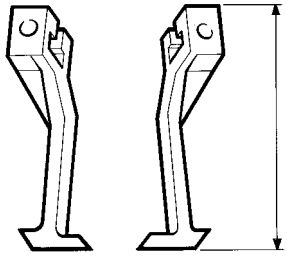	Pair of retainers

TOOLS

TOOL NO.		DESCRIPTION
99345056	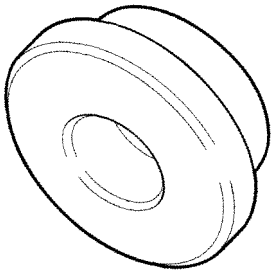	Counter block for pullers
99355087	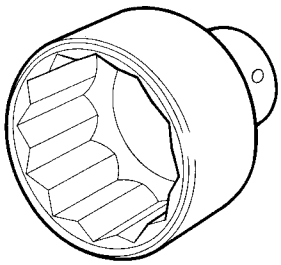	65 mm. diam. box wrench for disassembly - assembly wheel hub locking ring
99370006	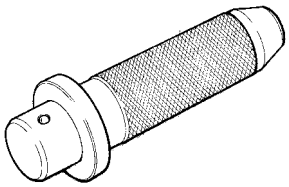	Handle, interchangeable drift
99370309	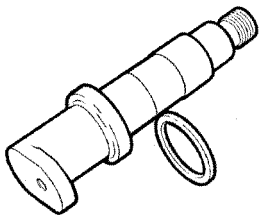	Tool for measuring thickness of bevel pinion adjustment rings (to be used with 99395728)
99370317	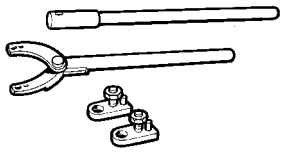	Lever and relevant extension bar to retain flanges
99370497	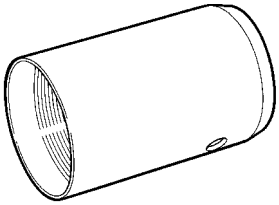	Tool for assembly of wheel hub

TOOLS

TOOL NO.		DESCRIPTION
99370498	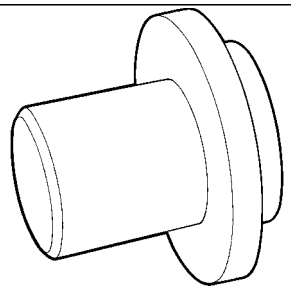	Tool for assembly of wheel hub bearing and phonic wheel
99374022	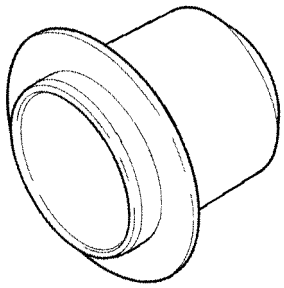	Keying tool for assembly of differential bevel pinion gasket (to be used with 99370006)
99370617	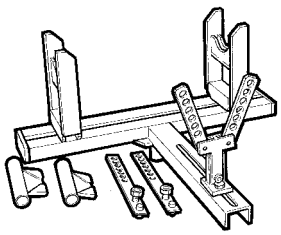	Axle universal support during removal/installation
99389819	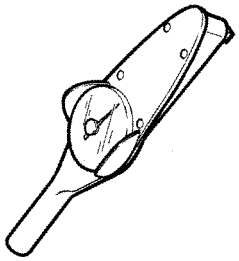	Torque wrench (0 to 10 mm) with 1/4" square attachment
99395728	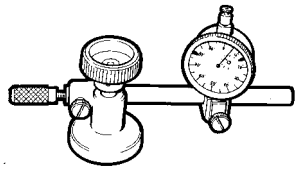	Dial gauge with support to be used with the tools to determine the adjustment thickness of the bevel pinion
99348001	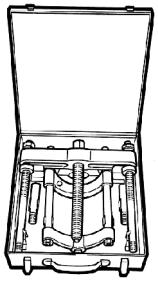	Extractor with locking device

525010 OVERHAULING THE REAR AXLE ASSEMBLY

This chapter deals with overhaul operations different from those described for rear axle 450210.
Adjustment data, tightening torque and tools are those specified in this chapter.

Figure 6

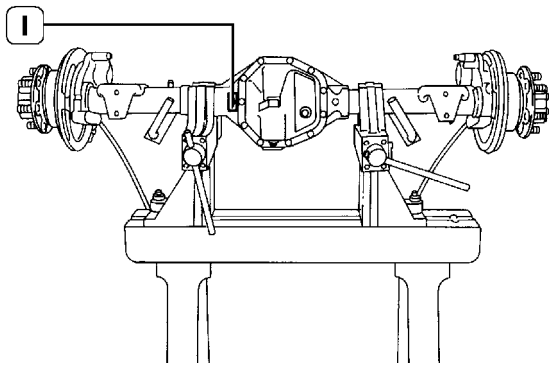

44609

Set the entire rear axle assembly on stand 99322215.

The identification data of the rear axle unit are given on the plate (1) fixed near to the leaf spring attachment support.

525030 Wheel hub overhaul

Figure 7

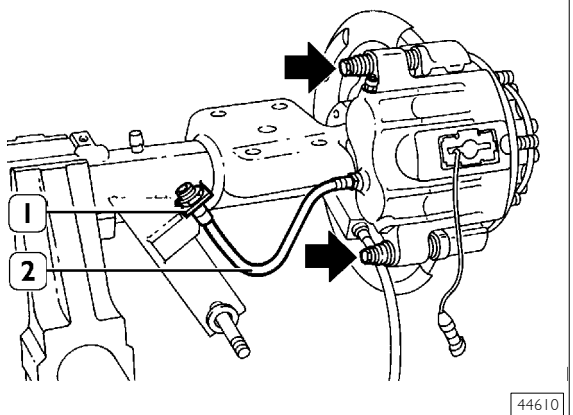

44610

Disconnect the pipe (2) from the support bracket (1). Take out the screws (⇒) and remove the brake caliper from the mounting.

The thread of the screws securing the brake caliper is treated with adhesive. Therefore, they must not be reused, but replaced with new ones every time they are removed.

Figure 8

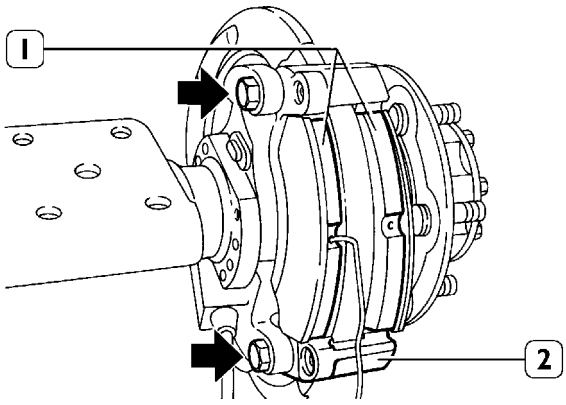

44611

Take off the brake linings (1). Take out the screws (⇒) and remove the mounting (2).

Figure 9

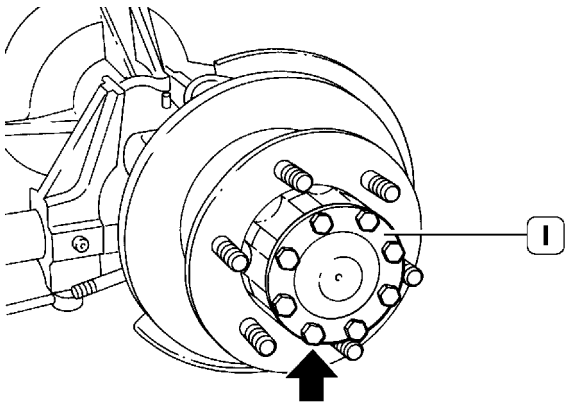

44612

Take out the screws (⇒) and remove the drive shaft (1).

Figure 10

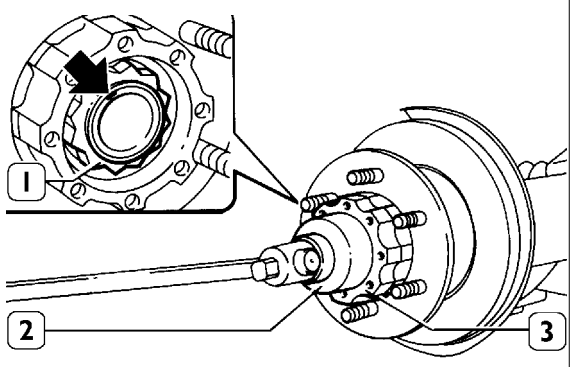

44613

Lift up the notch (⇒) of the ring nut (1). Using the wrench 99355087 (2) remove the ring nut (1), take out the washer and extract the wheel hubs (3).

525031 Replacing the wheel hub bearing

Figure 11

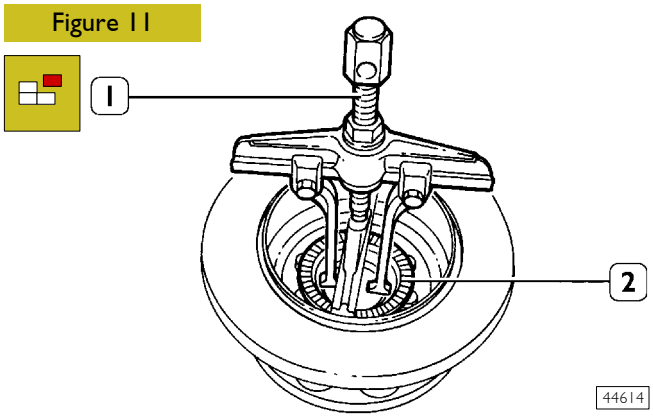

If the hub is fitted with a phonic wheel (2), take it out with the extractor (1) 99341001 as shown in the figure. Otherwise, take out the bearing guard ring.

Figure 12

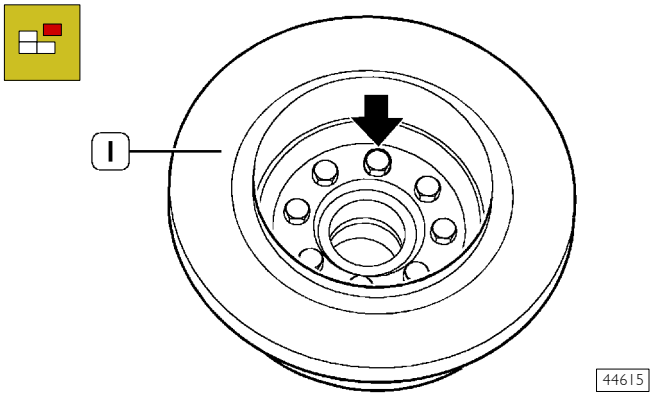

Take out the screws (⇒) and remove the brake disc (1) from the wheel hub. Check the brake disc as described under the Brakes heading.

Figure 13

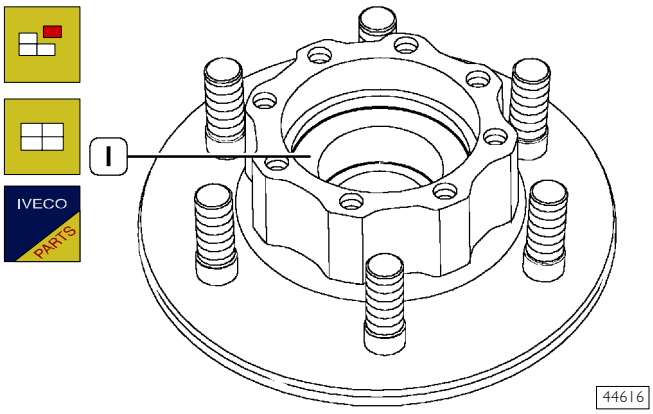

The bearing (1) is removed from the wheel hub with the aid of an ordinary punch.

Bearing (1) driving load is 2100 ÷ 5000 kg.

Figure 14

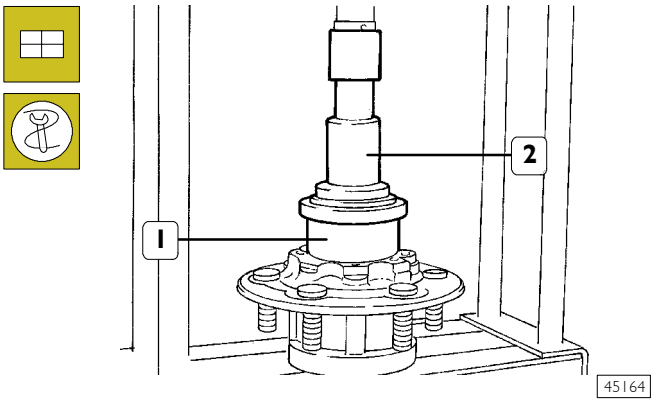

The new bearing should be mounted in the wheel hub with a press and tool 99370498.

Figure 15

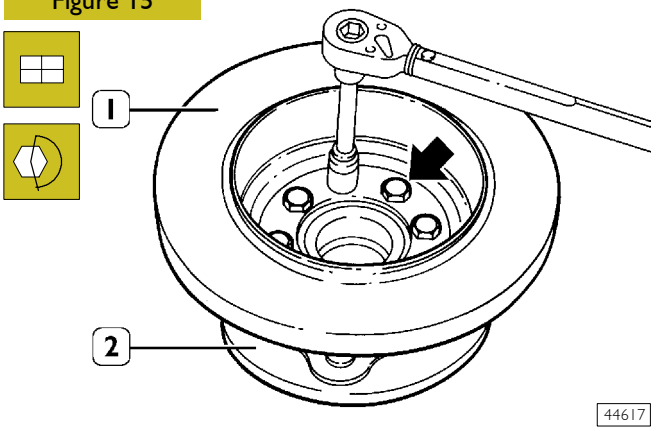

Mount the brake disc (1) on the wheel hub (2) and tighten the fixing screws (⇒) to the required torque.

Figure 16

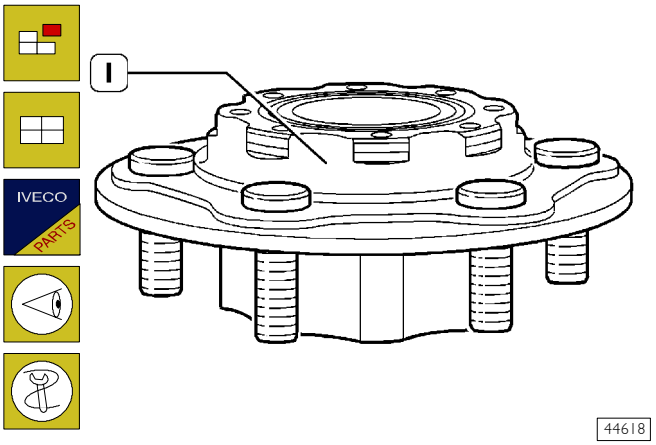

If it is necessary to replace the pins of the wheel hub (1), before mounting the new ones, check that the mating surface of the pin head is free from burrs, dross and blisters.

The pins should be driven in by applying a load on their head no greater than 2000 kg.

After driving them home, check that the pins are perfectly in touch with the hub: maximum orthogonal tolerance 0.2 mm.

Figure 17

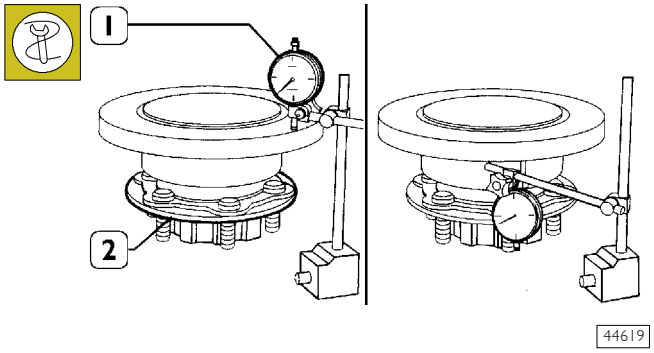

Stand the bearing of the wheel hub (2) on a special mounting that permits rotation. With a magnetic dial gauge (1) check the off-centring of the brake disc on both sides.

Off-centring must not exceed 0.1 mm.

Figure 18

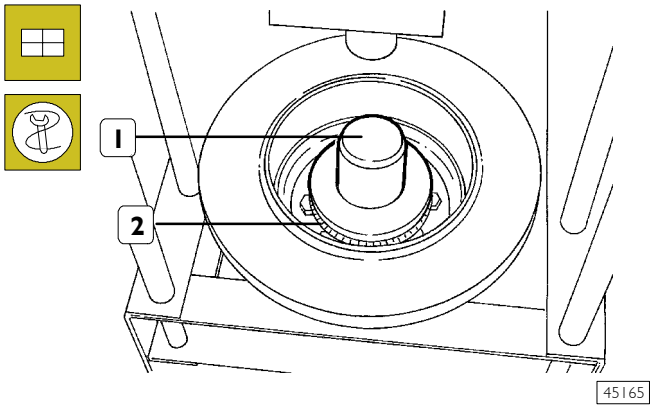

The phonic wheel (2) should be mounted in the hub with the punch 99370498 (1), checking after assembly that the "phonic" wheel rests perfectly in its seat in the hub.

Figure 19

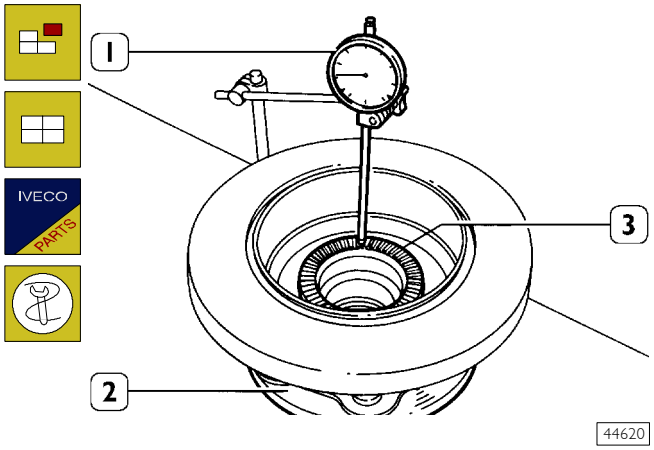

Check the orthogonality of the phonic wheel (2), proceeding as follows:

Position the feeler of the magnetic dial gauge (1) on the phonic wheel.

Making the wheel hub (3) turn, check that the maximum error of orthogonality of the phonic wheel (2) is no greater than 0.1 mm.

Figure 20

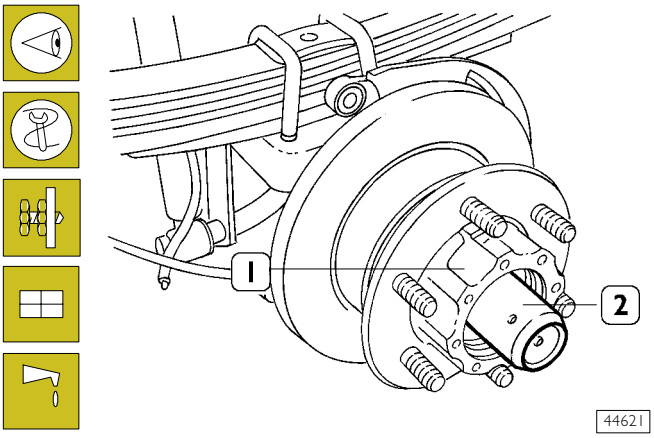

Check and, if necessary, adjust the clearance between the parking brake drum and shoes as described in the Brakes section.

Mount the inserter 99370497 (2) on the sleeve.

Lubricate the sleeve with TUTELA W140/M-DA oil and key the wheel hub (1).

Figure 21

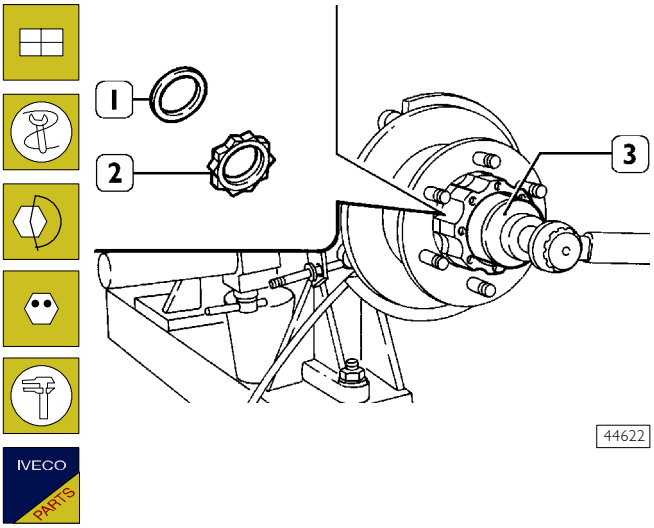

Mount the washer (1) and a new ring nut (2). Using the wrench 99355087 (3), tighten the ring nut (2) to the required torque.
Notch the fixing ring nut (2) on the milling of the axle housing arm.

Figure 22

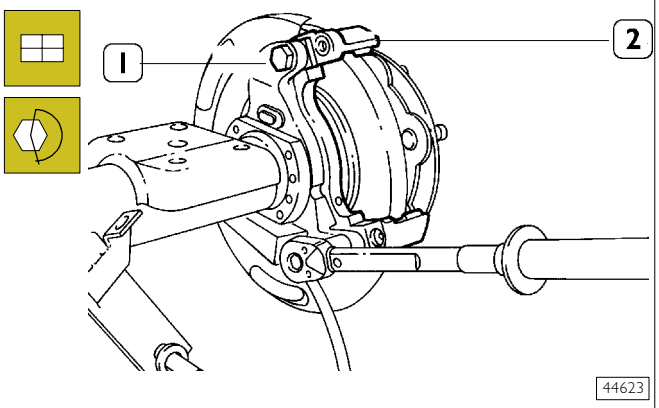

Mount the support (2) and tighten the fixing screws (1) to the required torque.

Figure 23

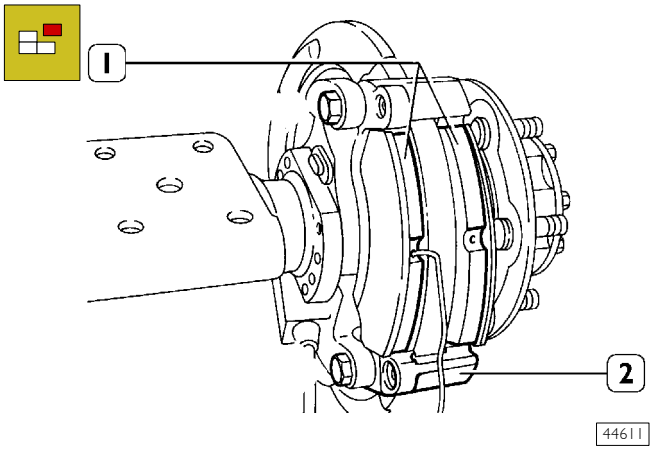

Mount the brake linings (1).

The brake lining with the wear indicator must be mounted from the piston side of the brake caliper.

Figure 24

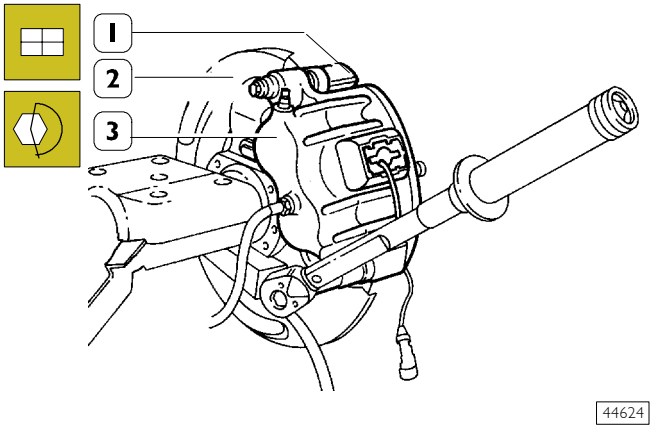

Apply the brake caliper (3) to the mounting (1) and tighten the fixing screws (2) to the required torque.

Having to move the brake caliper piston back, keep to the instructions given in the BRAKES section.

Mount only new screws (2, Figure 24).

Every time they are removed, they must be replaced.

Figure 25

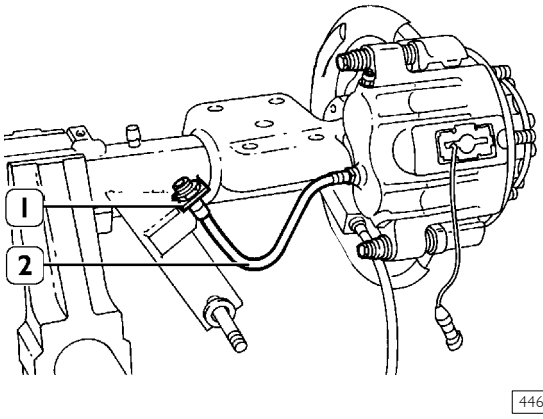

Connect the pipe (2) to the support bracket (1).

Figure 26

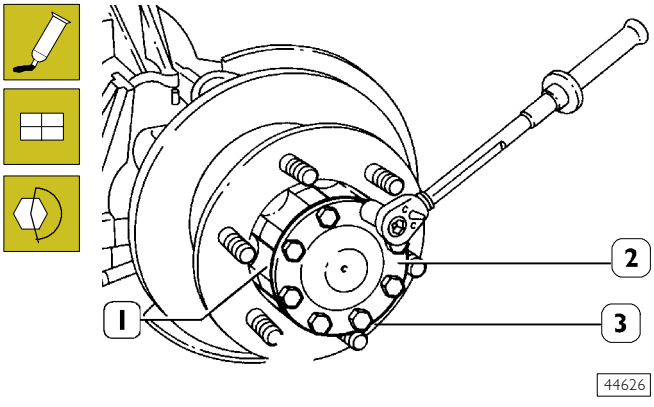

Apply IVECO 1905685 sealant on the contact surfaces of the drive shaft (2) with the wheel hub (1).

Mount the drive shaft (2) in the sleeve.

Tighten the screws (3) securing the drive shaft (2) to the hub (1) to the required torque.

526210 DIFFERENTIAL REPAIR OPERATIONS

526260 Disassembly of differential locking

Figure 27

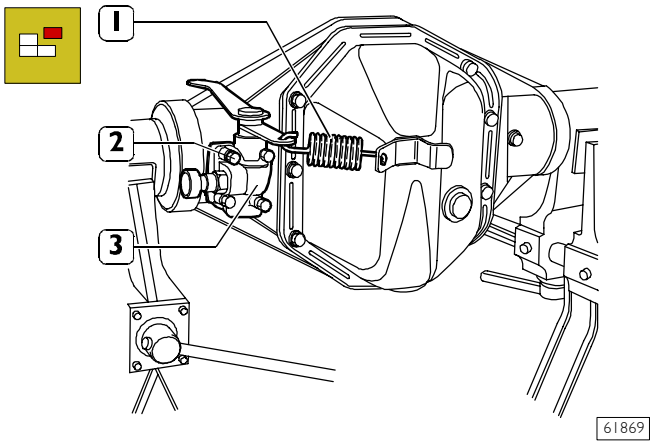

Remove the spring (1).
Unscrew and remove the 4 screws (2) including washers and then disconnect the differential locking device (3).
If required, remove the unit as described in the following paragraphs.

Differential locking removal

Figure 28

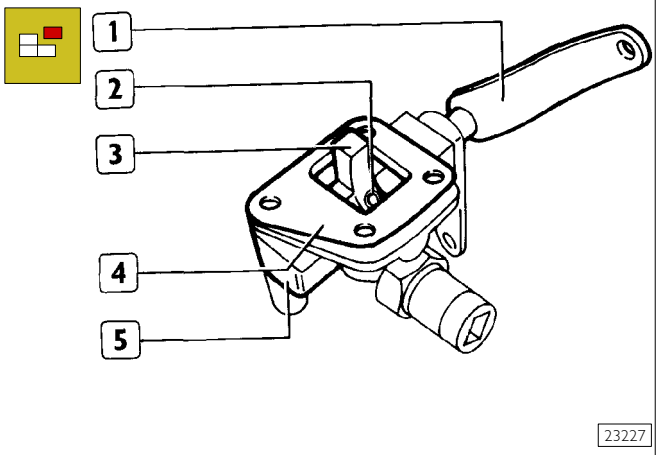

Remove gasket (4).
By means of a normal beater knock out the elastic pin (2), remove the lever (1) complete with ring and washer.
Finally, remove the control lever (3) from the support (5).

Assembling the differential locking device

Assemble the differential locking device by following the removal operations in the reverse order.
Re-attach the differential locking device to the rear axle casing as follows:

Differential locking refitting

Figure 29

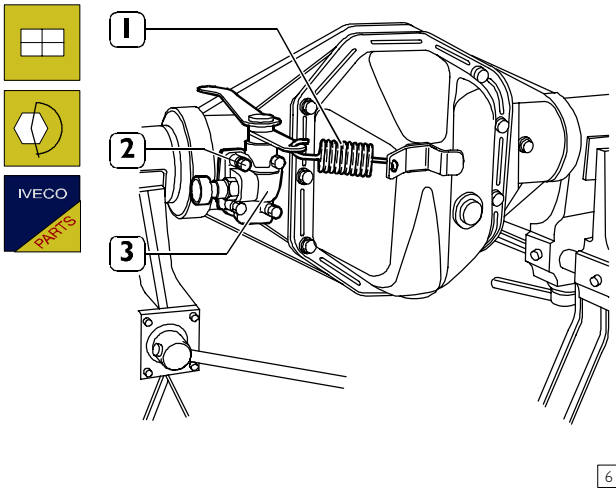

Mount a new O-ring on the differential locking attachment plane.
Position the previously assembled support (3) so as to insert the control lever in the spline on the sliding sleeve.
Insert the 4 screws (2) complete with washers and spring washers and tighten the screws to the driving torque of 23 Nm (2.35 kgm).
Assemble the spring (1).
Adjust the differential locking device by following the procedures below.

Figure 30

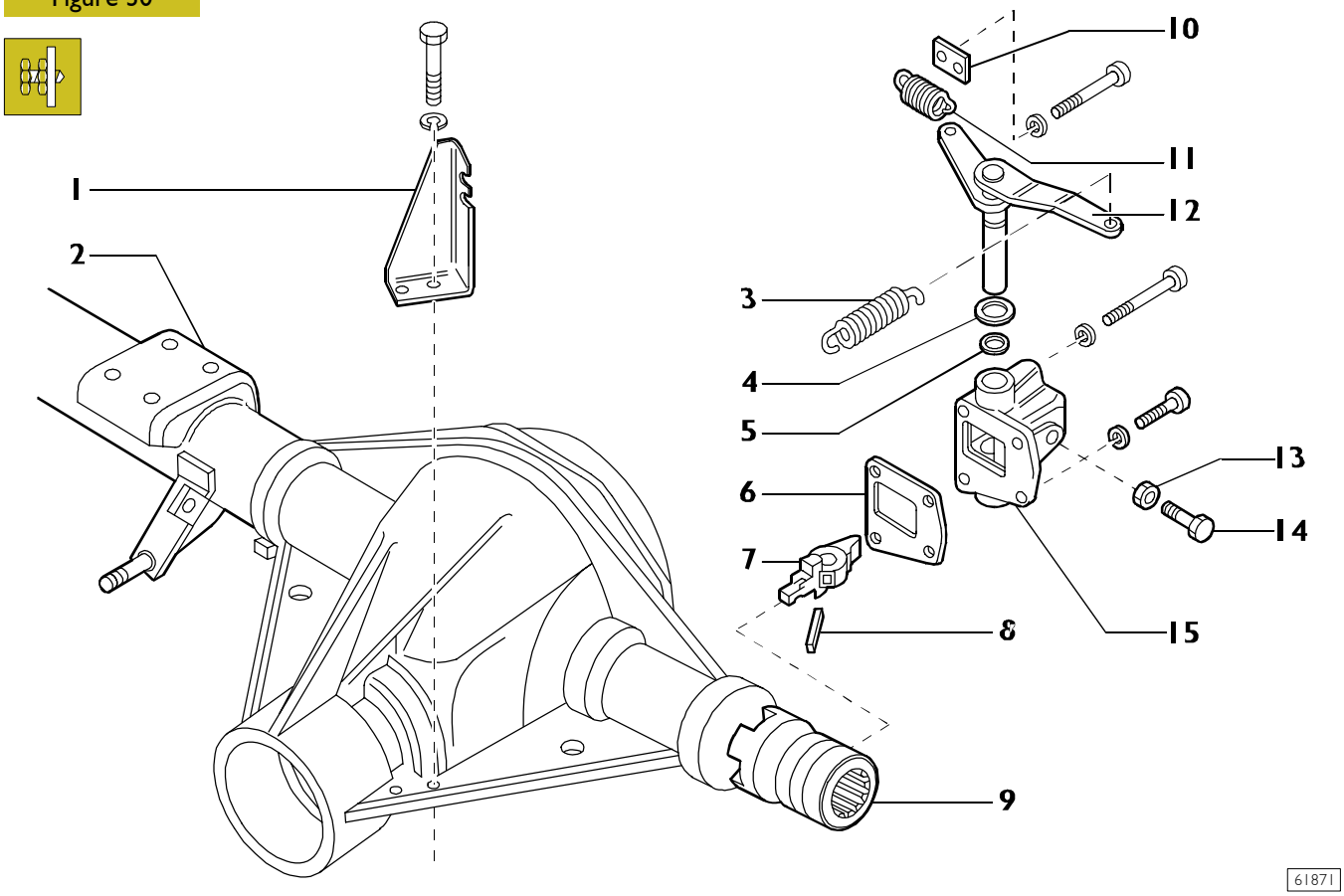

DIFFERENTIAL LOCKING DEVICE COMPONENTS
1. Flexible tie rod bracket (Bowden) - 2. Rear axle casing - 3. Spring - 4. Gasket - 5. Sealing ring - 6. Gasket - 7. Sleeve control lever (9) - 8. Elastic pin to fix lever (7) to lever (12) - 9. Differential locking sliding sleeve - 10. Spring coupling plate (11) - 11. Lever return spring (12) - 12. Transmission lever - 13. Adjusting screw nut - 14. Adjusting screw - 15. Differential locking device body.

Adjusting the differential locking device

Engage the sliding sleeve (9). Once this has been done, loosen the nut (13), move the adjustment screw (14) so that it is contact with the control lever (7). After this, unscrew the adjustment screw by 9.5 turns (corresponding to 9.5 mm. travel of the screw) and lock it with the fastening nut (13).

Disassembling the differential unit

Before carrying out repair operations on the differential unit you must drain off the oil and disassemble the drive shafts. For the rear axle, you must disassemble the differential locking as described in the relevant paragraphs.

Figure 31

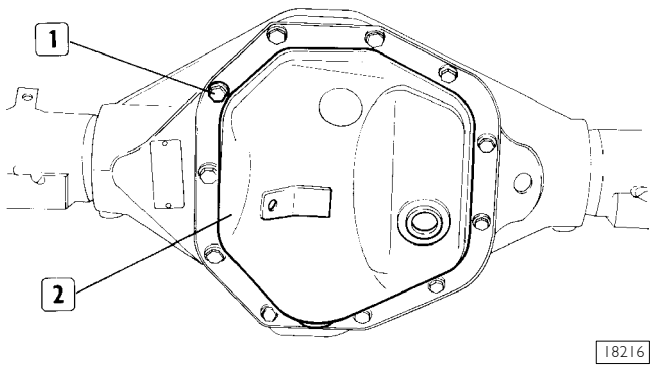

Unscrew the screws (1) complete with tab washers and spring washers and remove the gear housing inspection cover (2) complete with gasket.

Figure 32

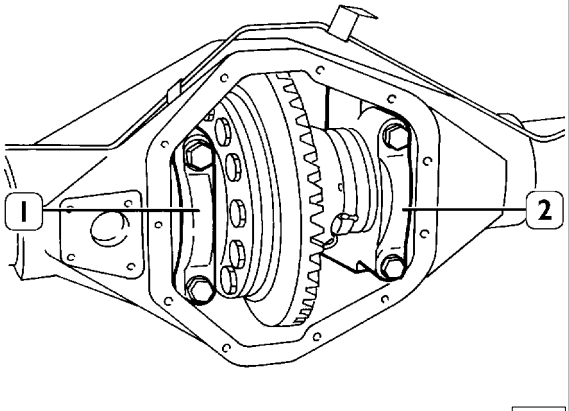

Mark the position of the caps (1 and 2) and remove them.

Figure 33

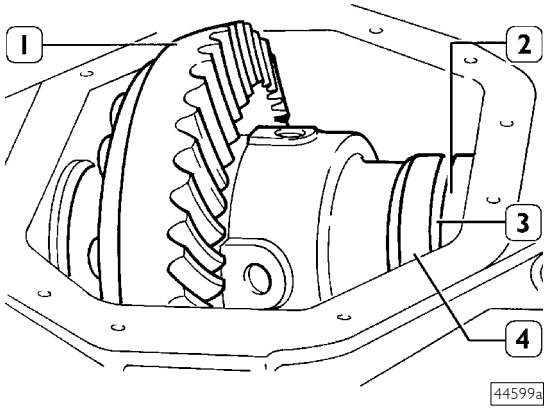

Take out the gear housing (1).

Note the assembly position of the adjustment rings (3) and take them out of the housing together with the spacer rings (2).

In the case of reuse, do not swap over the assembly positions of the external rings (4) of the tapered roller bearings.

Disassembly of gear housing

Figure 34

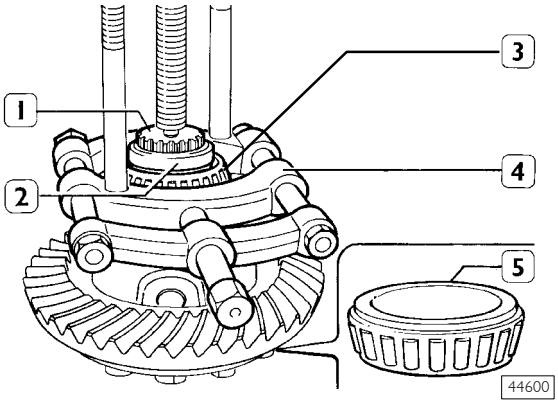

Extract the support bearing inner rings (3 and 5) and shoulder ring (2) from the gear housing and, by means of the puller tool 99348001 (4), extract the counter block (1).

The thrust ring (2) is only present with rear axles fitted with differential locking.

Figure 35

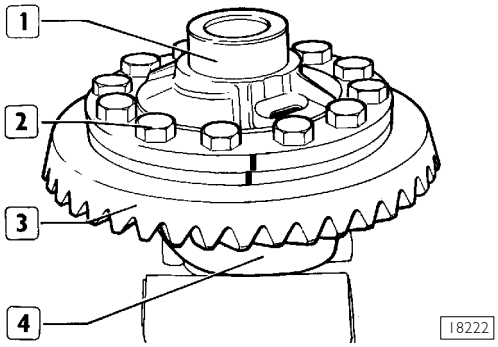

Mark the cover (1) and the gear housing (4).

Unscrew the screws (2), remove the ring bevel gear (3) and the gear housing (4) cover (1).

Figure 36

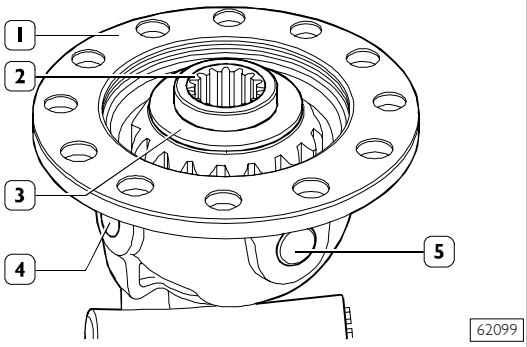

Remove the crown wheel (2) on the cover side with its thrust washer (3) from the gear housing (1).

Using a generic beater to remove the long pin (4) and the two short pins (5) from the gearing case (1).

Figure 37

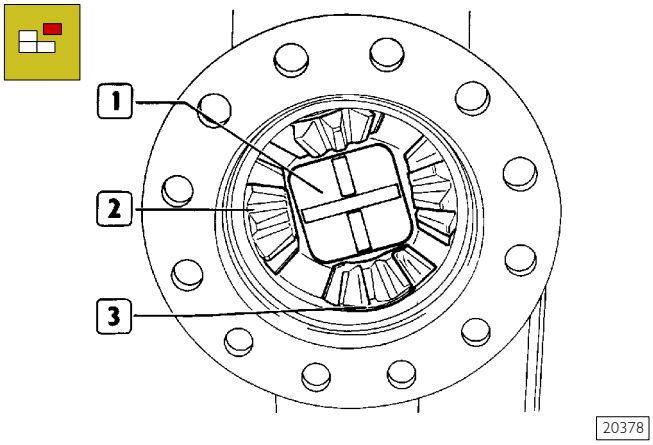

Remove the spider (1) and the four planetary gears (2) with their shoulder washers (3) from the gear housing.

Figure 38

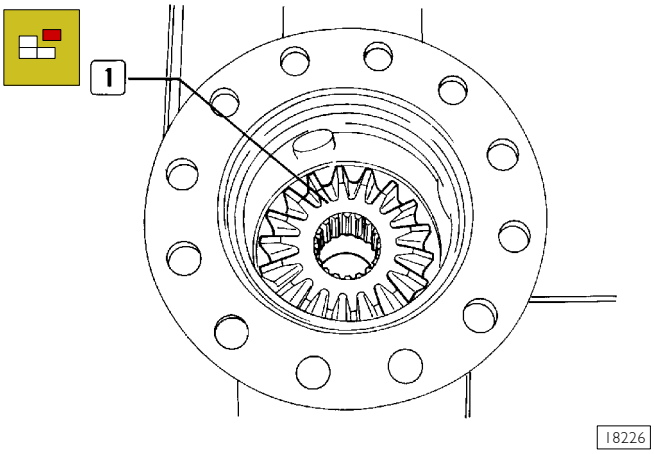

Remove the crown wheel (1) on the gear housing side with the thrust washers.

Figure 39

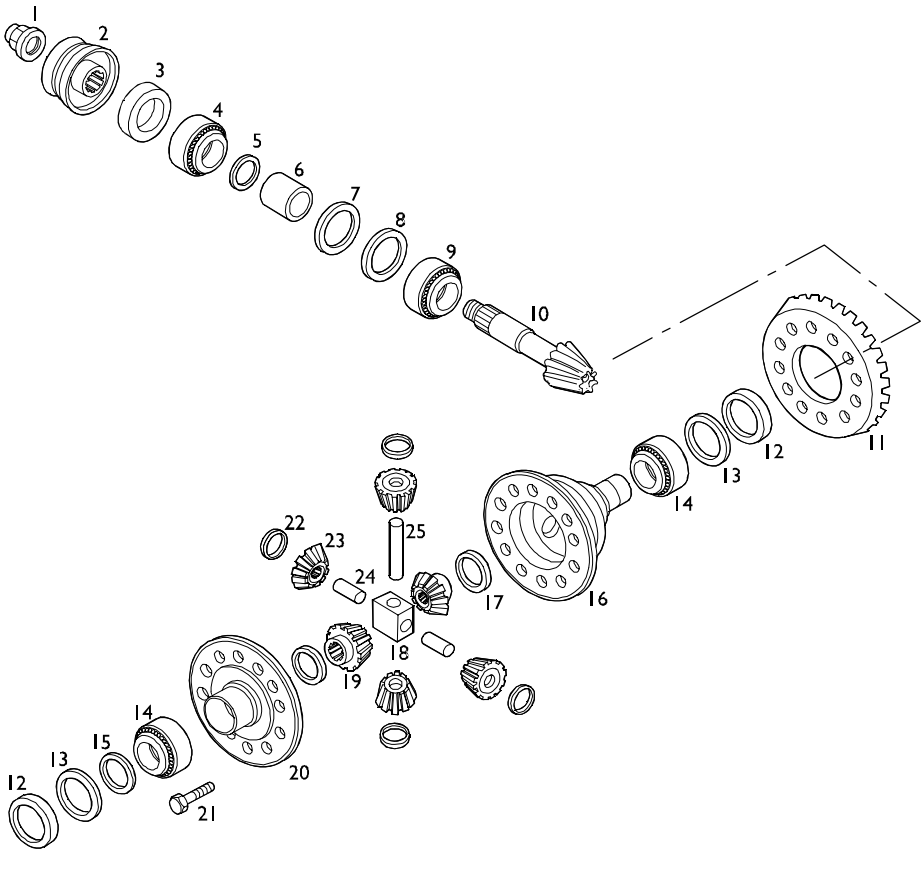

PARTS COMPRISING THE DIFFERENTIAL UNIT

1. Nut - 2. Transmission connection coupling - 3. Seal - 4. Front bearing - 5. Pinion shim ring - 6. Fixed spacer - 7. Spacer ring - 8. Adjustment ring - 9. Rear bearing - 10. Bevel pinion - 11. Ring bevel gear - 12. Fixed ring - 13. Adjustment ring - 14. Bearing - 15. Thrust ring (axle with differential locking) - 16. Gear housing - 17. Crown wheel thrust washer - 18. Spider - 19. Crown wheel - 20. Gear housing cover - 21. Screw - 22. Planetary gear thrust washer - 23. Planetary gear - 24. Short pin - 25. Long pin.

Assembly of gear housing

Figure 40

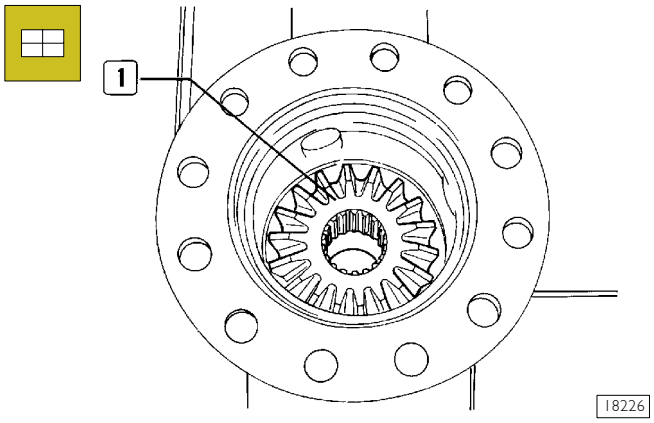

Position the crown wheel (1), gear housing side, complete with thrust washer, into its own housing.

Figure 41

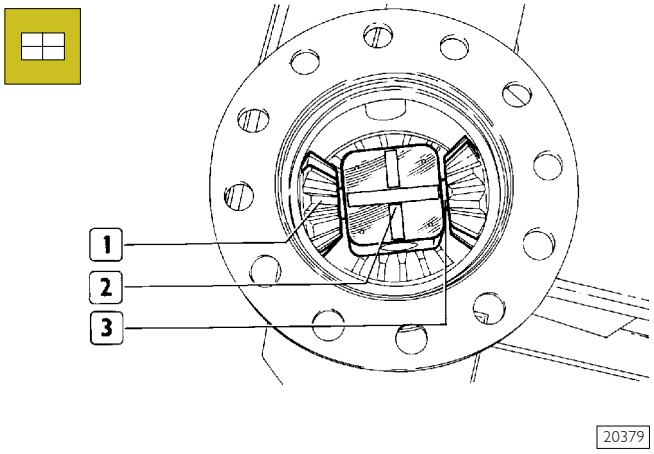

Position the two planetary gears (1) complete with thrust washers, spider (2) and then insert the long pin (3).

Figure 42

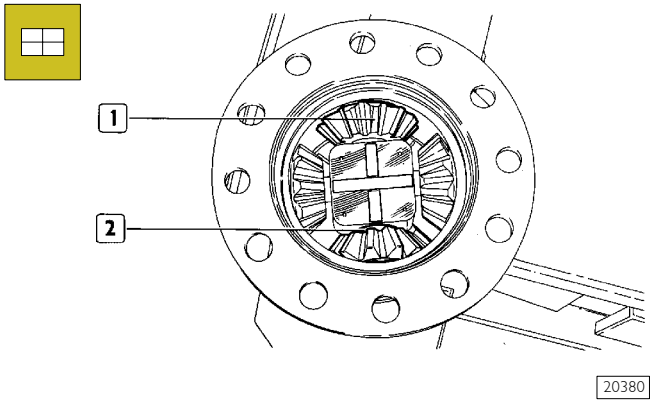

Position the other two planetary gears (1) complete with thrust washers and then insert the two short pins (2).
Rotate the planetary gears-crown wheel unit and check that it is free without stiffness.
Assemble the other crown wheel complete with thrust washer.

Figure 43

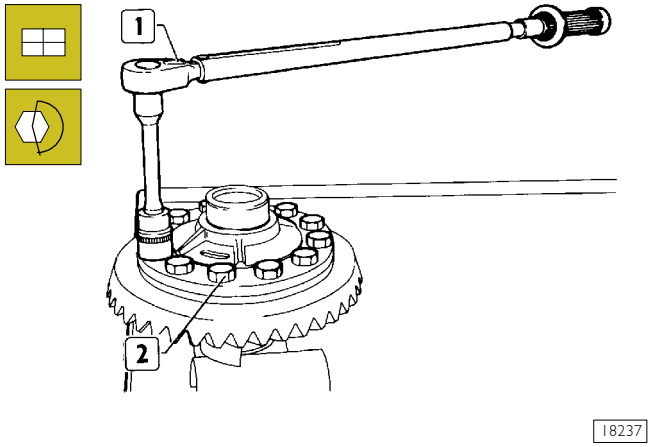

Assemble the cover and make the marks made during disassembly coincide. Assemble the ring bevel gear and fasten this to the half-casing by means of the fixing screws.
By means of a torque wrench (1) tighten the fixing screws (2) to the required tightening torque.

Figure 44

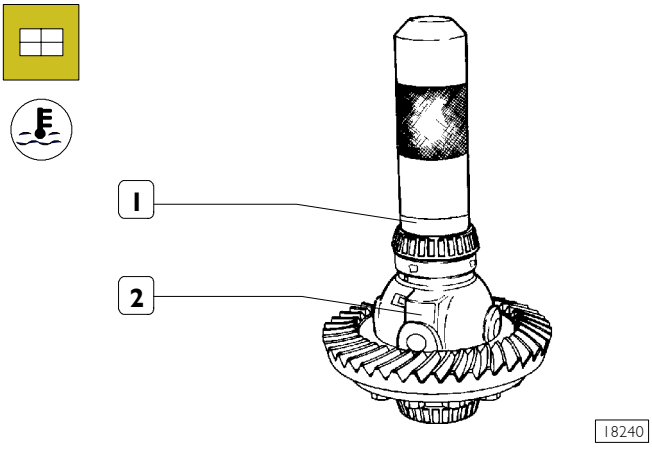

Only for axles with differential lock.
Using tool 99305121, heat thrust ring (1) to a temperature of 120°C ÷ 150°C for 15' and fit on the gear casing (2) from the side with the differential lock.

Differential unit refitting

Figure 45

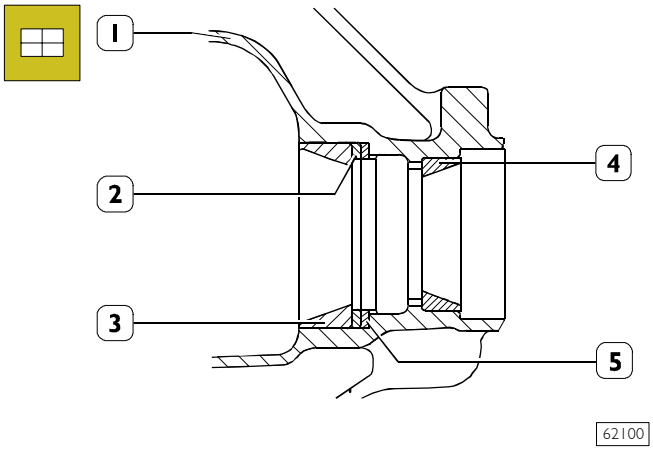

Using a suitable punch, with a grip, drive the external ring (4) for the front bearing into the axle housing (1).

Position the spacer ring (2), thickness 2 mm, and using a suitable punch drive in the external ring (3) of the rear bearing.

Determine the adjustment thickness and position of the bevel pinion as described for axle 450210.

Remove the external ring (3) of the tapered roller bearing.

Position the adjusting ring (5) of the calculated thickness on the spacer ring (2).

Refit the external ring (3) of the tapered roller bearing.

Figure 46

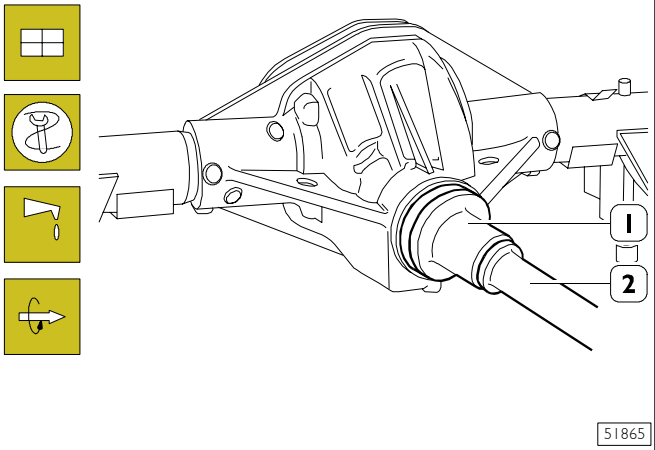

Lubricate the internal ring of the front bearing and position it in the housing.

Using the key 99374022 (1) and grip 99370006 (2), mount the pre-lubricated seal.

Determine the bevel pinion rolling torque adjustment ring as described for axle 450210.

The rolling torque of the bevel pinion must be measured with lubricated bearings and seals.

Figure 47

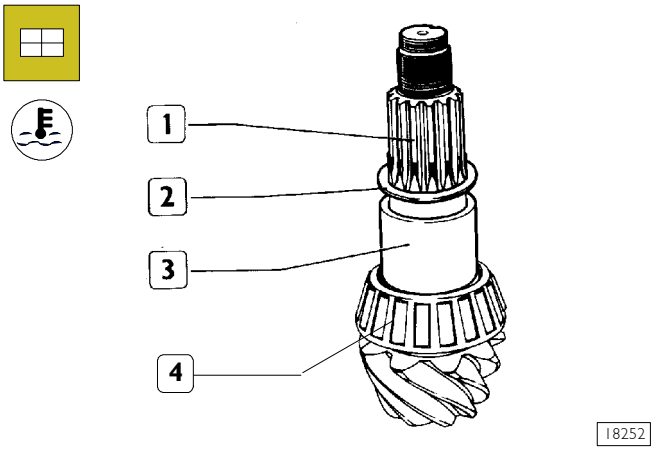

Heat the internal ring (4) of the tapered roller bearing to 80°C ÷ 90°C for approximately 15 min. and drive it, with a suitable punch, onto the bevel pinion (1).

Position the spacer ring (3) and adjustment ring (2), calculated beforehand to obtain the required rolling torque, on the bevel pinion (1).

Figure 48

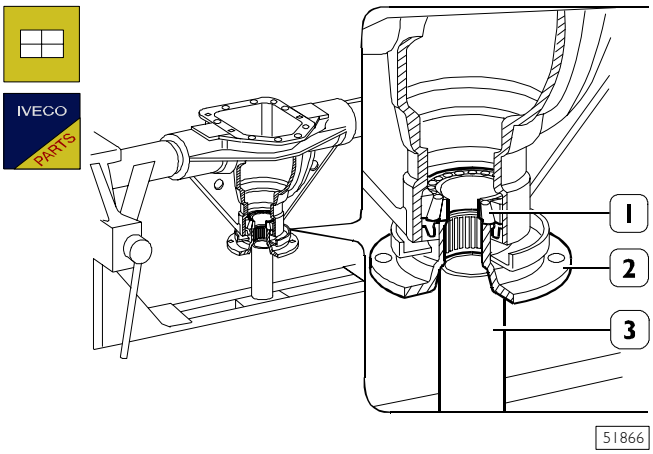

Position the axle housing as shown in the figure.

On the stand, set a pipe (3) of such diameter and length as to provide a solid supporting surface for the flange (2) and the internal ring (1) of the front bearing above, already mounted in the axle housing.

Figure 49

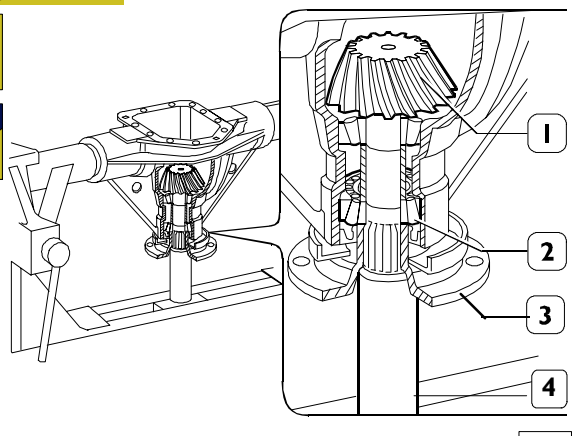

Insert the bevel pinion (1), assembled as shown in the figure, in the internal ring of the front bearing (2) and in the flange (3).

Strike the top of the bevel pinion until it is possible to fit the nut (1, Figure 50) securing the flange (3).

Take out the support pipe (4).

Complete assembling the pinion by fully tightening the nut.

Block rotation of the transmission flange with the retainer tool 99370317.

Using a suitable Allen wrench and the torque wrench, tighten the bevel pinion retainer nut (1, Figure 50) to the required torque.

To be on the safe side, check the rolling torque of the bevel pinion with the dynamometer 99389819.

Figure 50

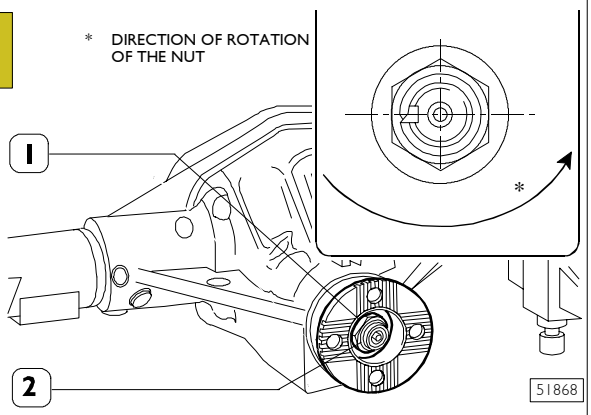

Make a cut in the collar of the nut (1) by the milling of the bevel pinion (2) as shown in the figure.

Figure 51

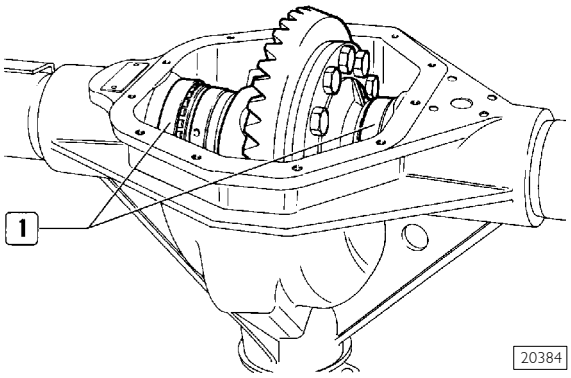

Position the sliding sleeve in the rear axle housing for differential locking (if present). Mount the external rings (1) for the gear housing support bearings and then position the previously mounted gear housing in the rear axle housing.

Figure 52

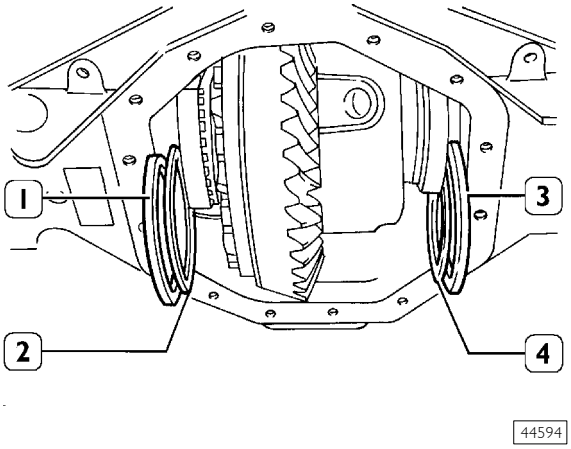

Mount the spacers and adjustment rings in the same number, thickness and position found during disassembly, in the following order: spacer (1), adjustment ring (2), adjustment ring (3) and spacer (4).

Figure 53

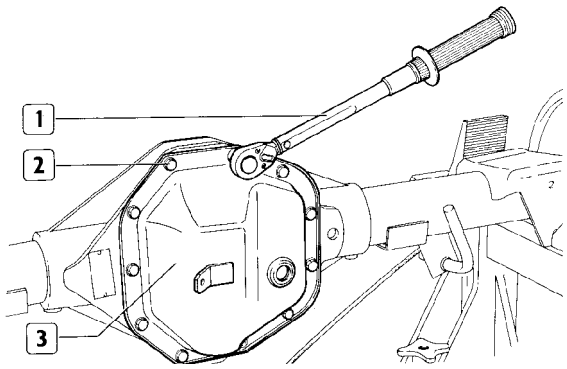

18262

Complete assembly by checking the total rolling torque and the bevel pinion coupling clearance as described for axle 450210.

Position a new seal ring over the gear housing inspection attachment surface.

Mount the cover (3), insert the fixing screws (2) complete with tab washers and spring washers.

Tighten the screws (2) with the torque wrench (1) to the required tightening torque.

Do not tighten the screws to a torque greater than the value indicated since this would impair the sealing effect of the gasket placed between the coupling plane and the gear housing inspection cover.

Mount the differential locking device (if present) and adjust it as described under the relevant heading.

Mount the drive shafts as described under heading: "525030 Overhauling the Hubs".

Screw on the oil drainage plug and tighten it to the required torque.

Add lubricating oil in the required quantity and grade through the hole.

Screw on the oil filler plug and tighten it to the required torque.

Take the assembly off the stand.

The assembly should be put back on its mounting to prevent the dust guards and/or brake discs from getting damaged.

Rear axle 450517/2

Page

REAR AXLE REMOVAL - REFITTING 63

❑ Removal 63

❑ Refitting 63

DESCRIPTION 65

SPECIFICATIONS AND DATA 66

TIGHTENING TORQUES 68

EQUIPMENT 70

OVERHAULING THE REAR AXLE ASSEMBLY . 74

❑ Air breather disassembly - assembly 74

❑ Overhaul of wheel hubs 74

❑ Removal 74

❑ Stud replacement 76

❑ Refitting 76

❑ Refitting 77

DIFFERENTIAL REPAIR OPERATIONS 79

❑ Differential locking 79

DIFFERENTIAL REPAIR OPERATIONS 80

❑ Differential unit removal 80

❑ Gearing case removal 80

❑ Differential components check 82

❑ Rear axle casing check 82

❑ Gearing case refitting 82

❑ Differential unit refitting 86

REAR AXLE REMOVAL - REFITTING

Removal

Position the vehicle on level ground and lock the front wheels.

Loosen rear wheel fastening nuts.

Lift the rear part of the vehicle and position it on proper stands.

Fit hydraulic truck 99321024 under the rear wheels, remove wheel fastening nuts and then remove wheels.

Loosen handbrake lever adjustment nut (4). Release cables (2) from vehicle cross member by releasing the retaining clips (5), and from the side member brackets by loosening clamp fastening screws (3).

Loosen propeller shaft fastening screws (6).

Release cables from clamps and disconnect the brake lining (1) and (7) wear indication electrical cables of ABS sensors, if any.

Loosen shock absorber (14) fastening nuts (16).

Loosen the screws (17) fastening the stabilizer bar (10) to the rear axle.

Disconnect brake oil pipes from connection (13) and secure them to the chassis to prevent oil draining from system.

Disconnect pipe (15) from rear axle casing oil vapour bleed.

Position the hydraulic jack fitted with support 99370617 under the rear axle.

Loosen the nuts (8) of the brackets (9) fastening the rear axle to the leaf spring (10).

Lower the hydraulic jack and remove the rear axle.

Figure 1

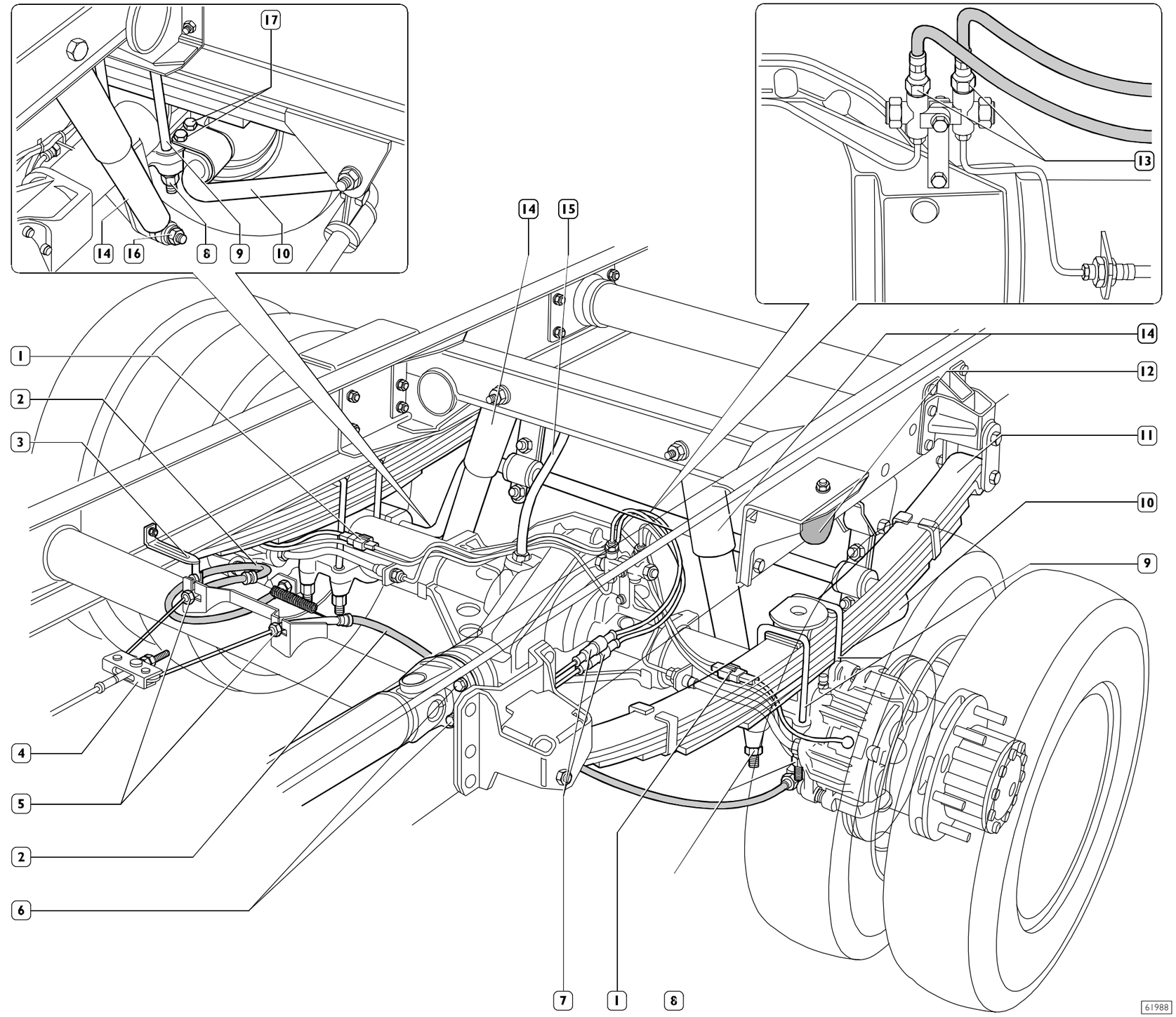

Refitting

For refitting, carry out the operations described for removal in reverse order, observing the required tightening torques for the screws and/or nuts.

Afterwards, check that:

- ❑ Check the thread of the brackets joining the leaf springs to the axle. If there are any irregularities, rectify the thread (operation 500412) or replace the brackets.
- ❑ Bleed the air from the brake hydraulic system as described under the relevant heading (operation 784010).
- ❑ Adjust the handbrake control ties as described under the relevant heading (operation 502710).
- ❑ Lock the nuts or screws to the required tightening torque.
- ❑ The self-locking nuts must not be reused.
- ❑ Check the state of the flexible pads (12) and replace them if they have deteriorated (operation 500417).
- ❑ The lubricating oil in the axle housing should be at the right level.

DESCRIPTION

The rear axle is the load-bearing type with a single reduction using a hypoid crown wheel and pinion.

The axle housing is made of pressed sheet steel with hot pressed arms.

The central portion, seat of the differential unit, is equipped with cooling fins.

The bevel pinion is supported by two pre-lapped tapered roller bearings to hold the bearing pre-load better.

The rolling torque of the bearings of the bevel pinion is adjusted by changing the thickness of the adjustment ring between the two tapered roller bearings.

In addition, it is possible to adjust the position of the bevel pinion with respect to the ring bevel gear by changing the thickness of the ring between the axle housing and the bevel pinion rear bearing external ring.

The gear housing is supported by two tapered roller bearings.

The rolling torque of the bearings is adjusted with adjustment rings between the spacer rings and the external rings of the bearings.

The clearance between pinion and crown wheel is adjusted by changing the thickness and/or position of the adjustment rings, though the total thickness must be the same as that of the adjustment rings removed.

The gear housing is composed of two half-housings.

It may be of two different sizes depending on the ratio of the crown wheel and pinion.

The gearing of the differential is composed of four planetary gears and two crown wheels.

Wheel hubs are supported by two "SET RIGHT" type bearings set on the sleeve.

The bearings need no adjustment.

The brakes are disc brakes with floating brake calipers.

The disc brakes are keyed onto the wheel hubs.

Perrot type brake callipers are supported by flanges welded to rear axle casing arms.

The parking brake is the drum type, built into the brake disc.

Figure 2

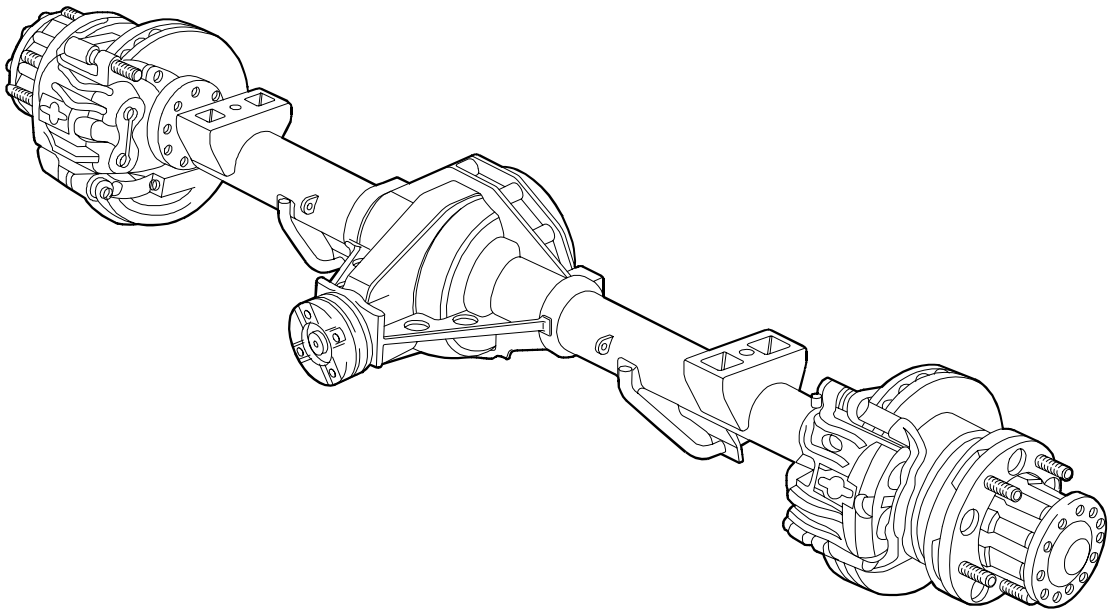

62983

SPECIFICATIONS AND DATA

Type of axle: Bearing with single reduction and mechanical control differential locking	**450517/2**
DIFFERENTIAL UNIT Reduction bevel gear pair ratio (tooth no.: pinion/crown wheel), on request	1/3.91 (11/43) - 1/4.30 (10/43)* - 1/4.56 (9/41)* - 1/5.13 (8/41)*
Bearings for bevel pinion	2 taper rollers
Bevel pinion bearing rolling torque (lubricated gaskets and bearings) Nm New bearings kgm	 2 ÷ 3 0.20 ÷ 0.30
Bevel pinion bearing preload adjustment	through adjustment rings
Bevel pinion bearing preload adjustment ring thickness	1 * - 2 mm * with 0.025 mm progression
Temperature for fitting inner bearing ring on bevel pinion	80 °C ÷ 90 °C
Bevel pinion position with reference to differential casing	By means of shims
Thickness of adjustment rings between bevel pinion and differential casing	3.45 ÷ 4.35 mm with 0.025 mm progression
Bearings for gearing case	2 taper rollers
Differential case bearing rolling torque Nm kgm	 2.6 ÷ 3.9 0.26 ÷ 0.39
Adjustment of differential case bearing rolling torque	Through adjustment rings
Thickness of adjustment rings for differential case bearing rolling torque	2.65 ÷ 3.20 mm with 0.05 mm progression
Backlash between pinion and crown wheel	0.15 ÷ 0.20 mm
Adjustment of backlash between pinion and crown wheel	Through adjustment rings

	Type of axle:	**450517/2**
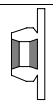	**WHEEL HUBS**	
	Wheel hub bearings	Two "SET-RIGHT" type taper rollers
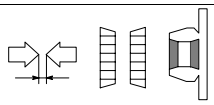	Hub bearing end play	0.16 max.
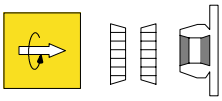	Wheel hub bearing rolling torque Nm kgm	 0 ÷ 4 0 ÷ 0.4
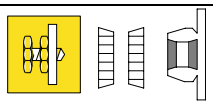	Wheel hub bearing end play adjustment	Fastening nut tightening to torque
	Rear axle oil Amount Litres kg Max. capacity GAW kg	**Tutela W140/M-DA** (SAE 85 W140) 3 2.7 5000

TIGHTENING TORQUES

Figure 3

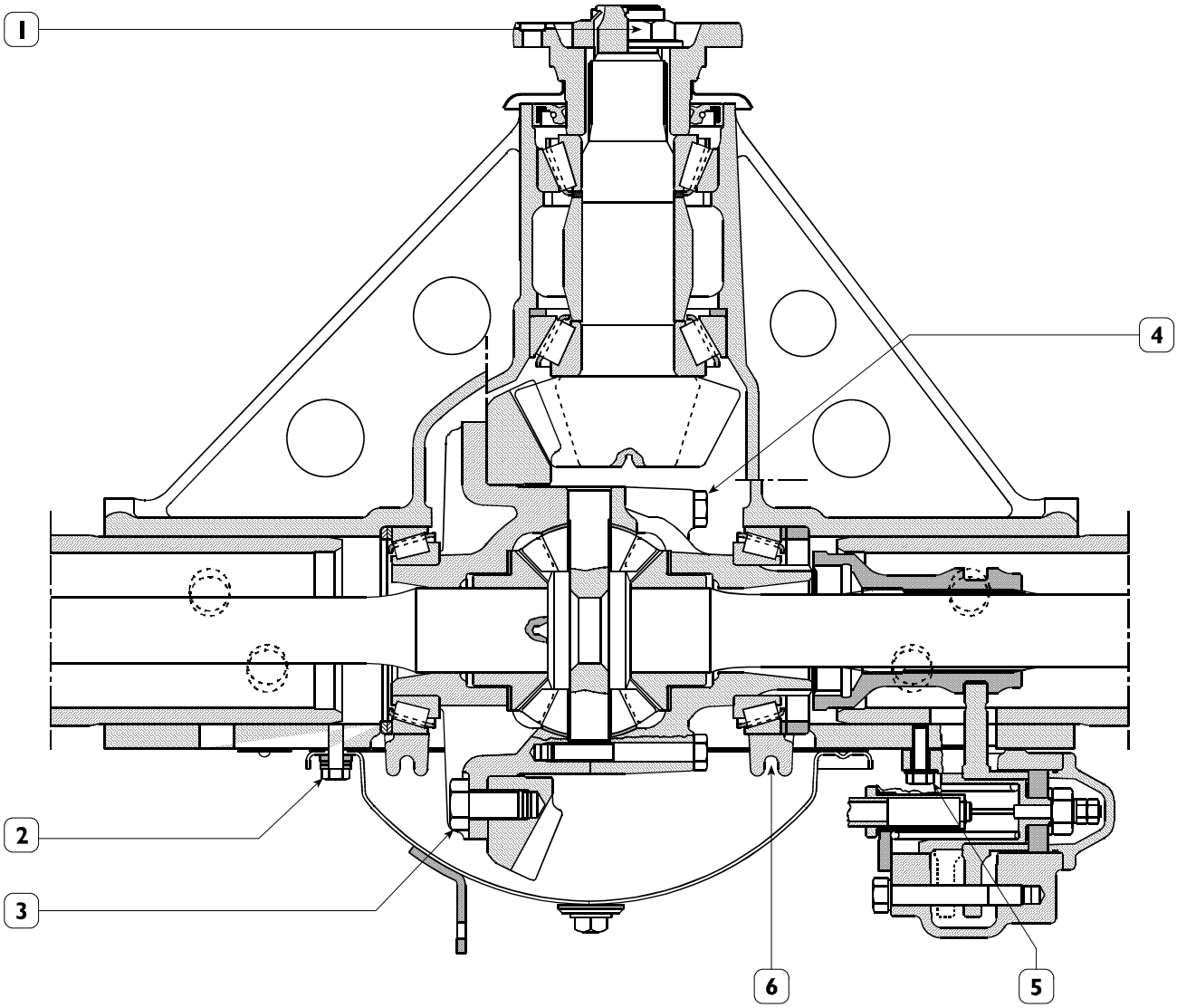

450517/2 (R0537) REAR AXLE DIFFERENTIAL SECTION

PART		TORQUE	
		Nm	kgm
1	Bevel pinion retaining nut	533 ÷ 589	53.3 ÷ 58.9
2	Screw fastening gearing inspection cover to rear axle casing*	26 ÷ 21	2.6 ÷ 2.1
3	Screw fastening crown gear to 12RDAC5 half casing*	309.5 ÷ 342.5	30.9 ÷ 34.2
	Screw fastening crown gear to 10RDAC5 half casing	266 ÷ 294	26.6 ÷ 29.4
4	Screw fastening half casings	61 ÷ 74	6.1 ÷ 7.4
5	Screw fastening differential locking device or cover	23	2.3
6	Screw fastening caps to rear axle casing	102 ÷ 113	10.2 ÷ 11.3

* Before tightening the screws, smear their threaded holes with IVECO sealant 1905683.

Figure 4

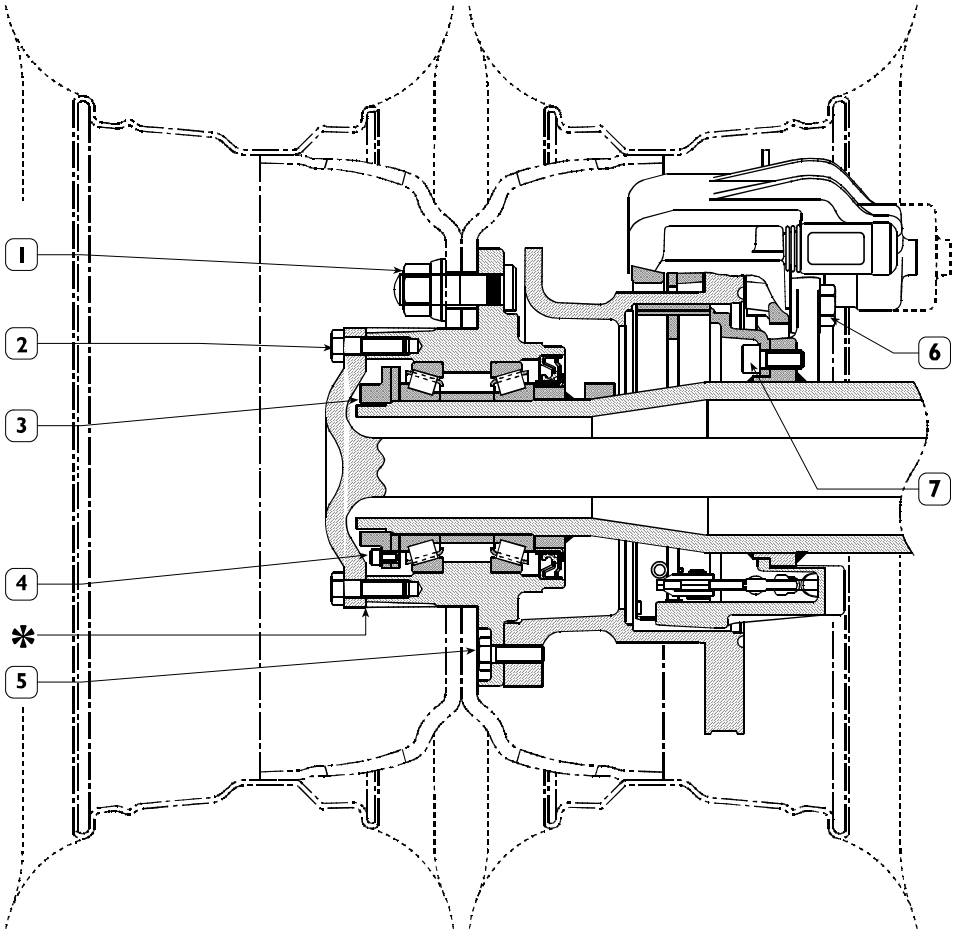

74729

Figure 5

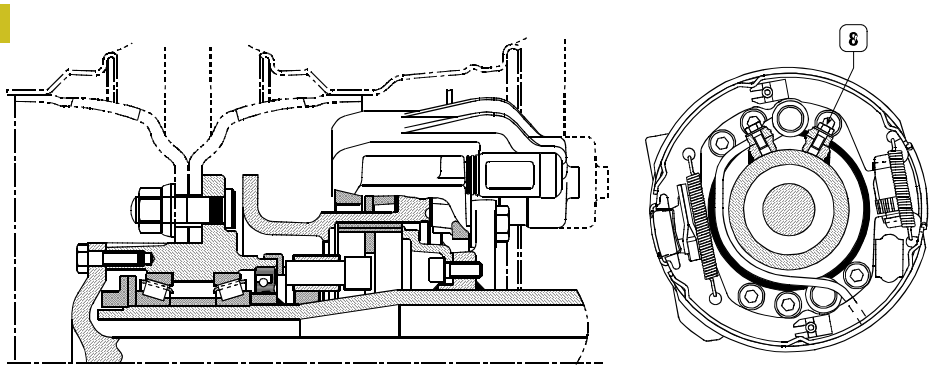

62878

ABS VERSION

PART		TORQUE	
		Nm	kgm
1	Wheel fastening nut	283.8 ÷ 342.6	28.3 ÷ 34.2
2**	Screw fastening axle shaft to wheel hub	56 ÷ 69	5.6 ÷ 6.9
3	Wheel hub bearing retaining ring nut	441 ÷ 540	44.1 ÷ 54
4	Safety screw	9.5 ÷ 11.5	0.9 ÷ 1.1
5	Screw fastening brake disc to wheel hub	54 ÷ 59	5.4 ÷ 5.9
6	Screw fastening brake calliper to rear axle	150 ÷ 177	15 ÷ 17.7
7	Screw fastening brake shoe support to rear axle casing	52 ÷ 57	5.2 ÷ 5.7
8***	Rpm sensor support fastening screw	5 ÷ 7	0.5 ÷ 0.7

* Smear axle shaft-wheel hub connecting surface with IVECO sealant 1905685.
** Smear the threads of the screws acting as plugs with IVECO sealant 1905683.
*** Apply LOCTITE 243 on hole threads.

EQUIPMENT

TOOL No.		DESCRIPTION
99305121	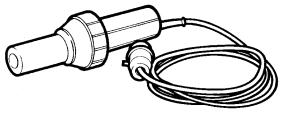	Hot air operated equipment
99306004	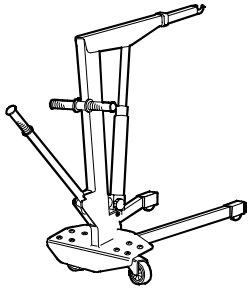	300 kg hydraulic crane
99306010	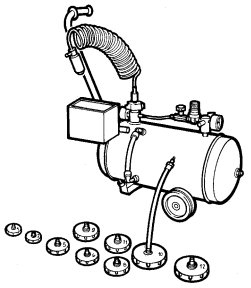	Equipment for bleeding air from brake and clutch system
99321024	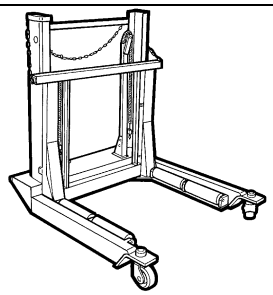	Hydraulic truck for removing - refitting wheels
99322215	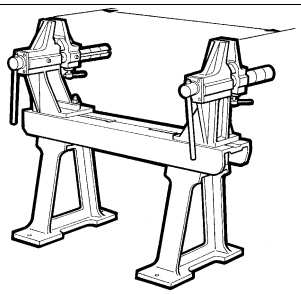	Stand to overhaul axles
99345056	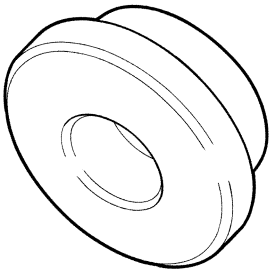	Counter block for pullers

EQUIPMENT

TOOL No.		DESCRIPTION
99348001	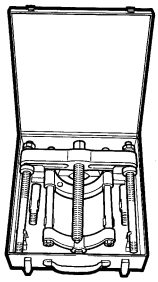	Puller with locking device
99357080	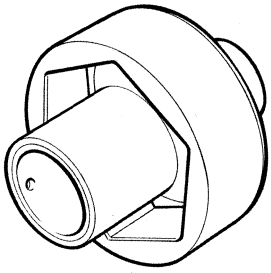	Wrench (91.5 mm) for wheel hub bearing adjustment nut
99370006	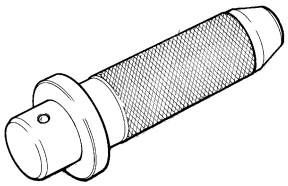	Handle for interchangeable beaters
99370007	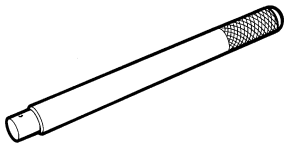	Handle for interchangeable beaters
99370296	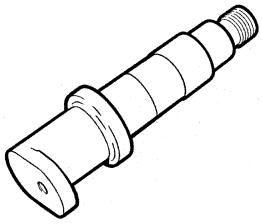	Tool to find bevel pinion shims (to be used with 99395728)
99370317	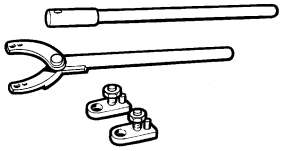	Counter lever and relevant extension to retain flanges

EQUIPMENT

TOOL No.		DESCRIPTION
99370617	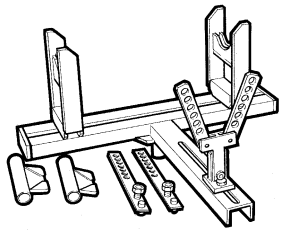	Universal support to hold axles during removal/refitting
99374093	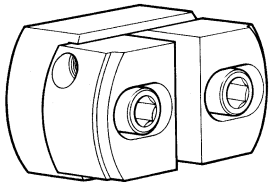	Beater to fit in place bearing outer races (91-134) (to be used with 99370007)
99374132	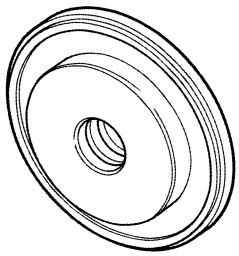	Element to fit in place wheel hub internal gasket (to be used with 99370006)
99374201	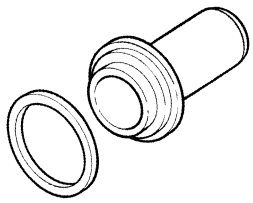	Element to fit in place differential bevel pinion gasket
99389819	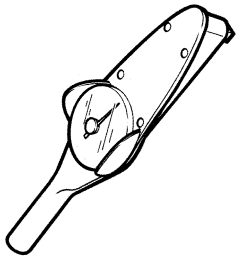	Dynamometric wrench (0-10 Nm) connection 1/4"
99395026	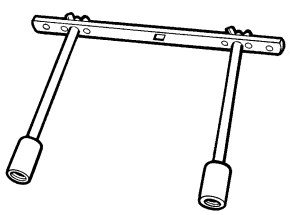	Tool to check hub rolling torque (to be used with dynamometric wrench)

EQUIPMENT

TOOL No.		DESCRIPTION
99395684	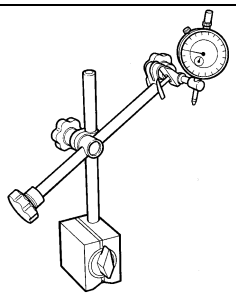	Dial gauge with magnetic base
99395728	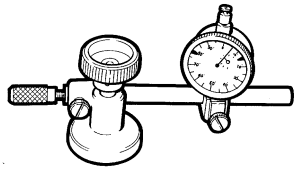	Dial gauge with support to be used with the tools for finding proper bevel pinion shims

525010 OVERHAULING THE REAR AXLE ASSEMBLY

The drive shafts, brake disc and calipers, air breather and differential can all be removed and refitted even with the unit mounted on the vehicle.

Figure 6

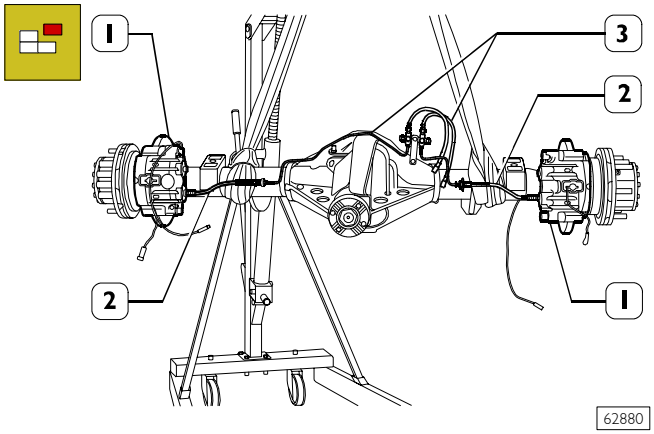

62880

Before positioning the rear axle assembly on the stand for overhauling, drain oil by loosening rear axle casing plug. Disconnect brake fluid pipes (2) from brake callipers (1) and from rear axle casing and pipes (3) from rear axle casing.

Figure 7

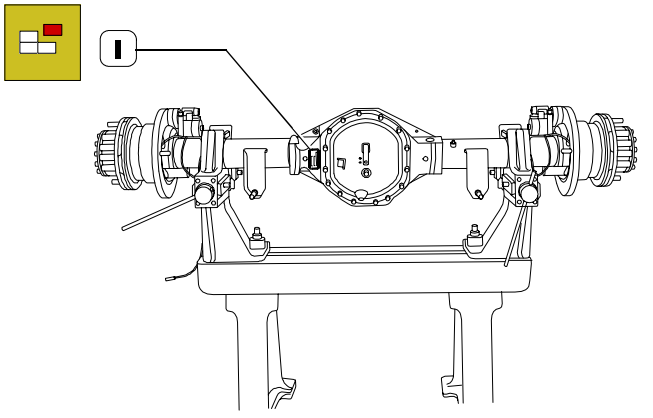

62881

Set the entire rear axle assembly on stand 99322215.

The identification data of the rear axle unit are given on the plate (1) fixed near to the leaf spring attachment support.

525013 Air breather disassembly - assembly

Figure 8

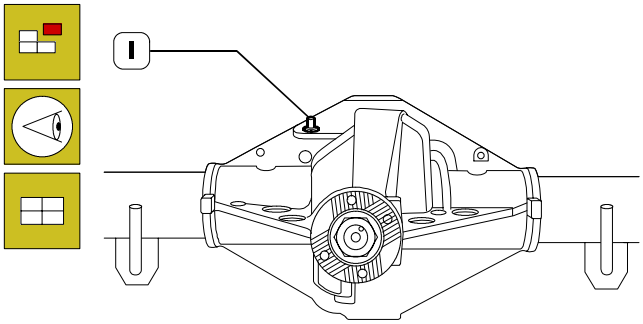

62882

Take out the screws (1) and remove the brake caliper with its brake linings from the mounting.

525030 Overhaul of wheel hubs

Removal

Figure 9

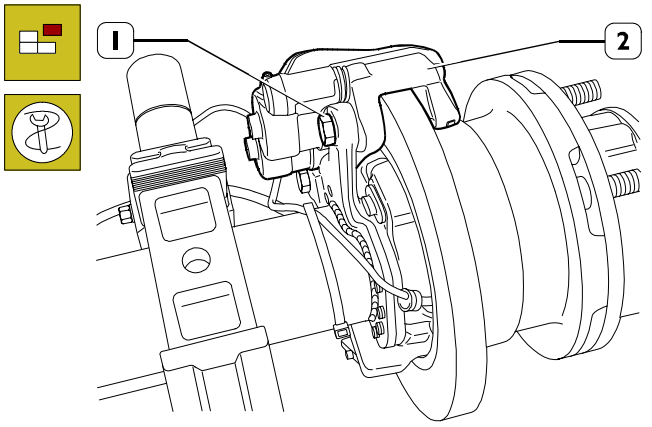

62883

Take out the screws (1) and remove the brake caliper (2) with its brake linings from the mounting.

The caliper must not be violently knocked or dropped.

Prevent the rubber caps coming into contact with sharp metal tools.

Do not dirty or wet the rubber caps with mineral grease or oil.

Do not dirty the pads with liquids or grease.

Check proper brake calliper and brake lining conditions as described in "Brake" section.

Figure 10

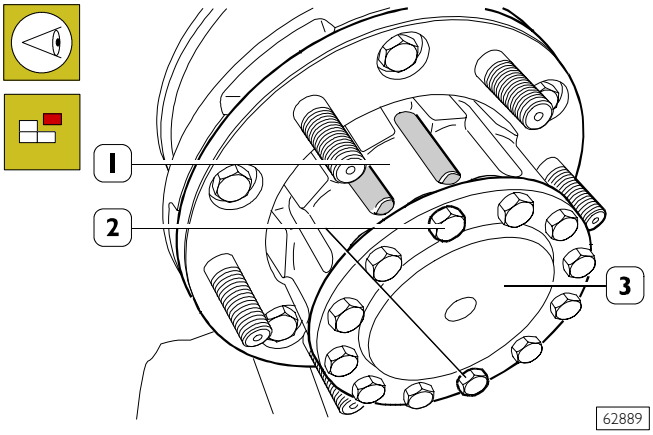

Rotate the wheel hub (1) to set downward one of the two screws (2) located between hub reliefs; remove the screws and drain oil completely from wheel side. Remove the other screws fastening the axle shaft (3) to the wheel hub (1).

Figure 11

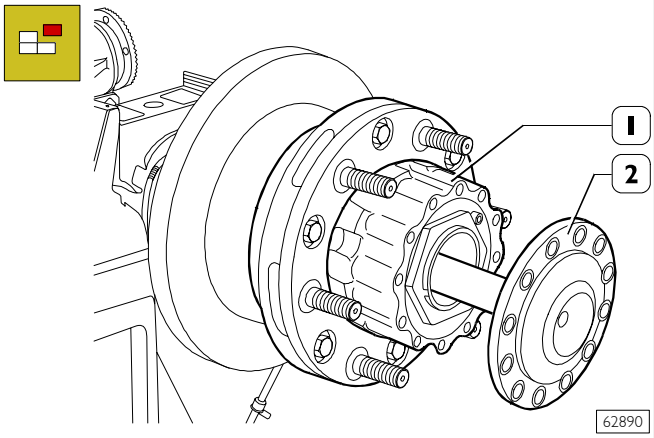

Remove the axle shaft (2) from the wheel hub (1).

Figure 12

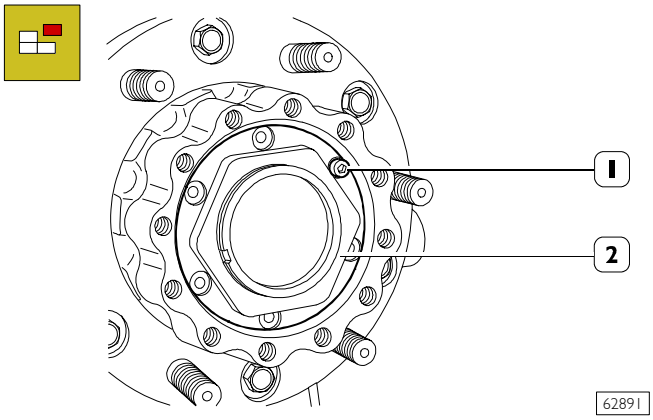

Remove ring nut (1) safety screw (2).

Figure 13

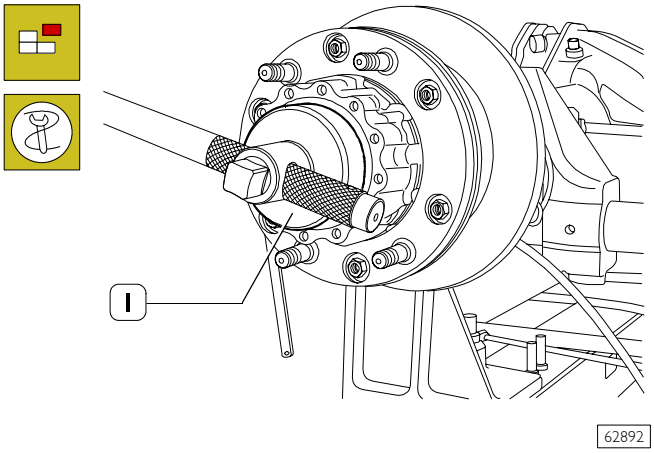

Loosen bearing retaining ring nut (1, Figure 12) using wrench 99357080 (1).

Figure 14

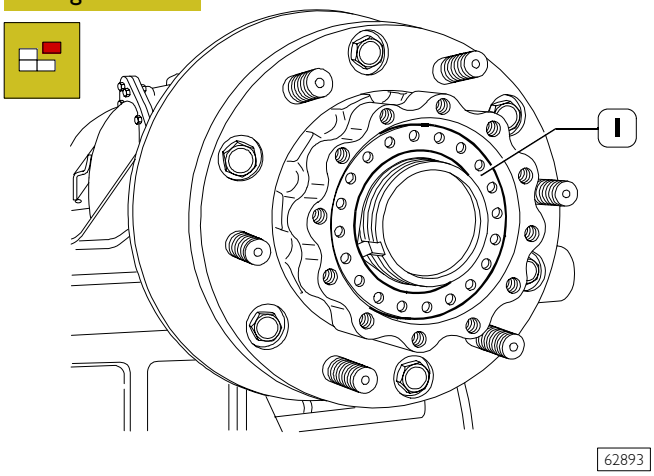

Remove the safety washer (1).

Figure 15

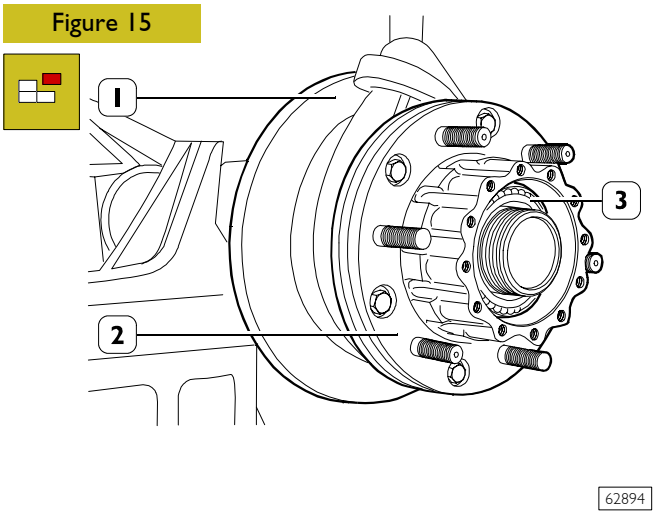

Sling the brake disc (1) with rope and hoist, remove the wheel hub (2) including: brake disc (1), front (3) and rear bearings, sealing ring and spacer.

Figure 16

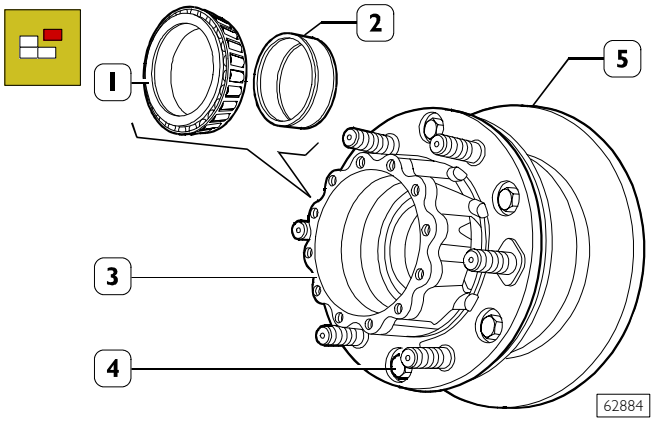

Remove front bearing (1) inner ring and spacer (2). Remove screws (4) and disconnect the brake disc (5) from the wheel hub (3).

Check the brake disc as described in the "Brake" section.

Figure 17

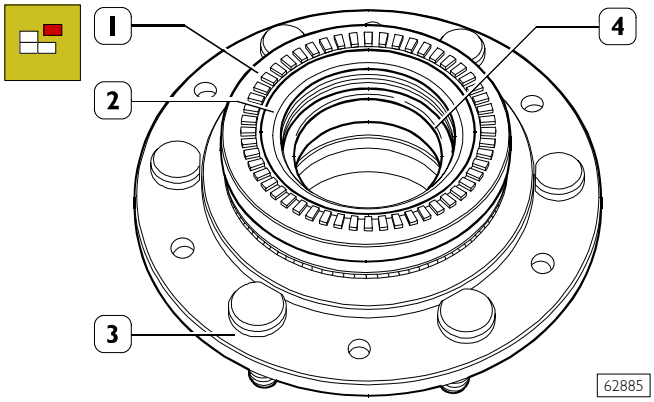

Remove phonic wheel (1), if any, using suitable equipment. Remove sealing ring (2) and the rear bearing inner ring (4) set below from the wheel hub (3).

Figure 18

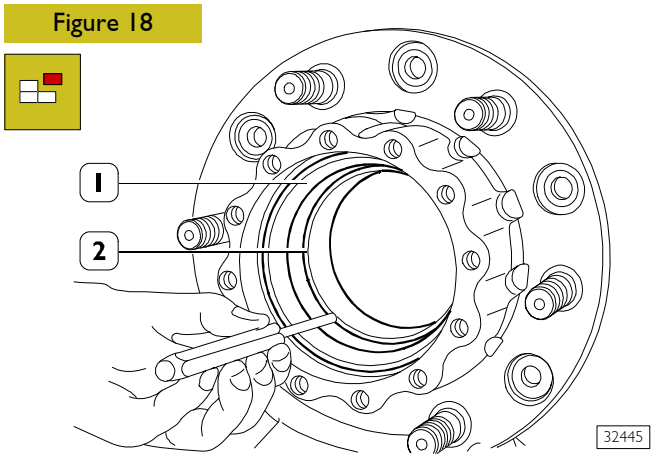

Use a suitable punch to remove the rear taper roller bearing outer ring (1). Repeat this operation to remove the front taper roller bearing outer ring.

Stud replacement

Figure 19

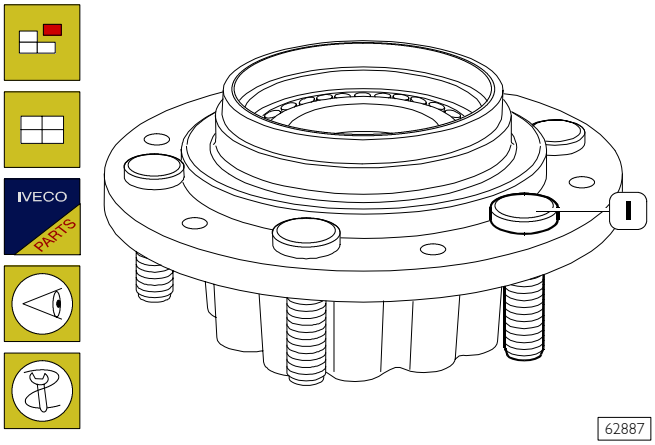

If it is necessary to replace the pins of the wheel hub (1), before mounting the new ones, check that the mating surface of the pin head is free from burrs, dross and blisters.

The pins should be driven in by applying a load on their head no greater than 2000 kg.

After driving them home, check that the pins are perfectly in touch with the hub: maximum orthogonal tolerance 0.2 mm.

Refitting

Figure 20

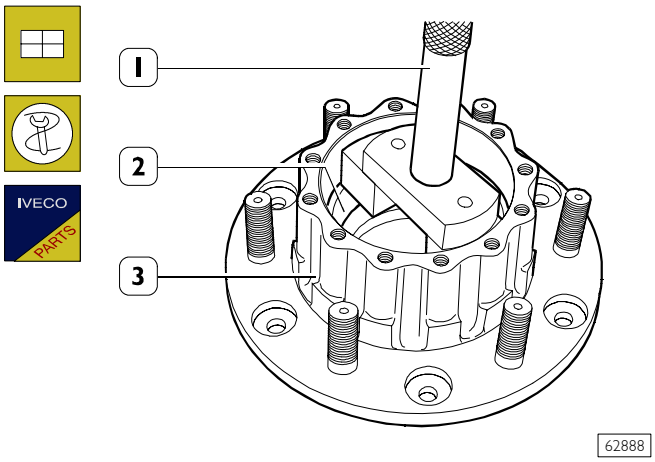

Use handle 99370007 (1) and beater 99374093 (2) to fit taper roller bearing outer rings into the wheel hub.

This operation shall be performed using a press until positioning the rings at 5 mm from their abutting end, their fitting shall be then completed by hand.

Figure 21

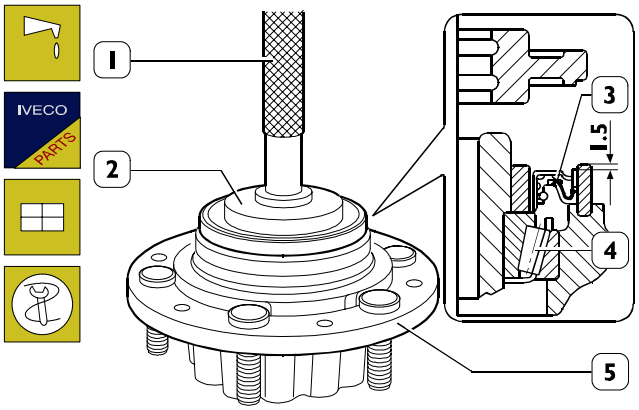

62932

Lubricate rear taper roller bearing inner ring (4) with SAE W 140 M-DA oil and fit it to wheel hub (5).
Use tool 99374132 (2) provided with proper handle 99370006 (1) to fit sealing ring (3).

Use tool 99374132 (2) side to position the sealing ring (3) at 1.5 mm from wheel hub side surface.

Fit the phonic wheel, if any, on the wheel hub.

Phonic wheel fitting shall be performed after heating it at 150°C.
When fitting is over, check whether the phonic wheel is resting perfectly on the hub seat.
Check whether phonic wheel squareness and oscillation is lower than 0.2 mm.

Figure 22

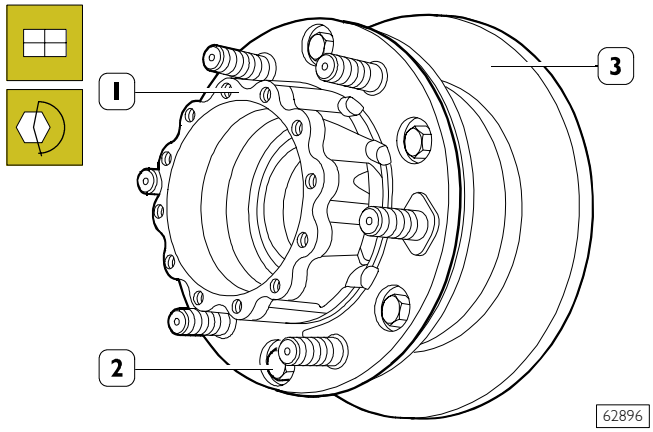

62896

Fit the brake disc (3) on the wheel hub (1) and tighten the fastening screws (2) to the specified torque.

Refitting

Figure 23

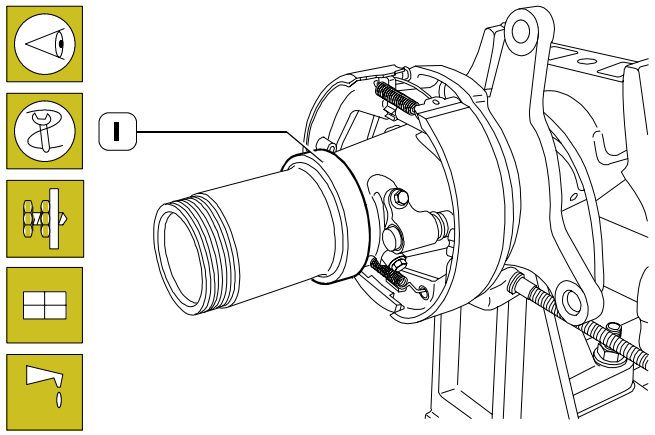

62938

Check and, if necessary, adjust the clearance between the parking brake drum and shoes as described in the Brakes section.

Lubricate the sleeve and the sealing ring supporting ring (1) with TUTELA W140/M-DA (SAE 85W140) oil.

Figure 24

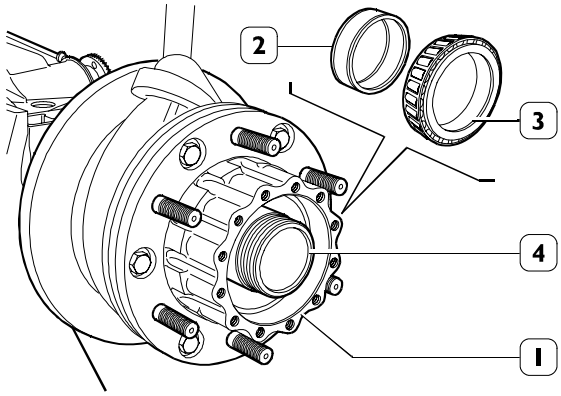

62897

Use suitable rope and hoist to fit wheel hub (1) on sleeve (4).
Lubricate spacer (2) and outer bearing inner ring (3) with Tutela W140/M-DA and fit them on sleeve (4).

Figure 25

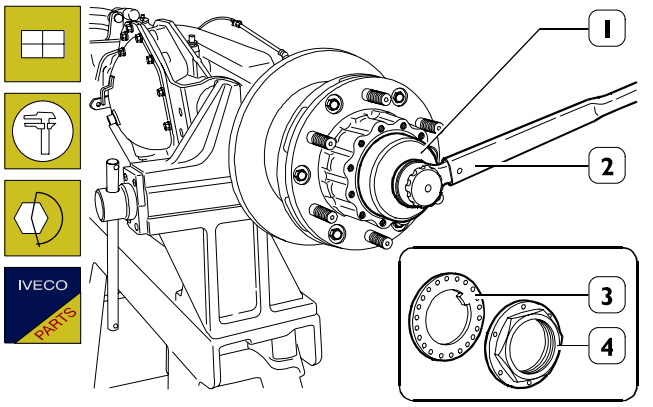

Fit the safety washer (3) so that the clip is guided properly into rear axle casing sleeve groove.
Tighten ring nut (4) with wrench 99357080 (1) and dynamometric wrench (2), tighten the new ring nut (4) to the specified torque.

Figure 26

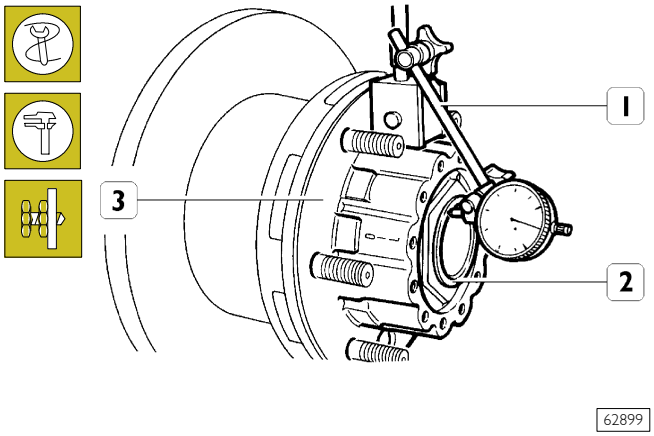

Position the dial gauge 99395684 (1) with a magnetic base on the wheel hub (3) and rest the rod on the sleeve (2).

Check whether wheel hub end play is falling between 0 and 0.16 mm.

Figure 27

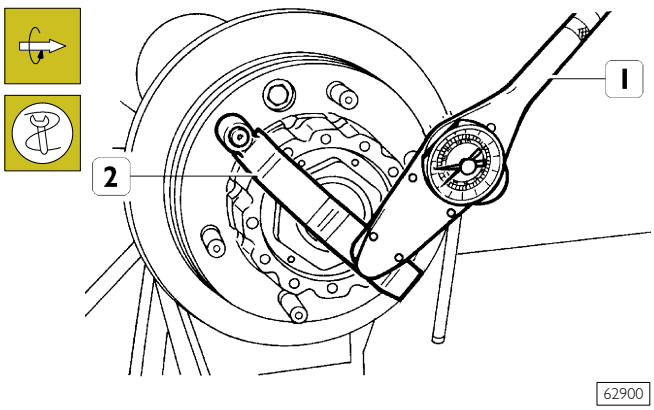

Use tool 99395026 (2) and the dynamometric wrench 99389819 (1) to check whether the wheel hub rolling torque is falling between 0 and 4 Nm (0 - 0.4 kgm).

Figure 28

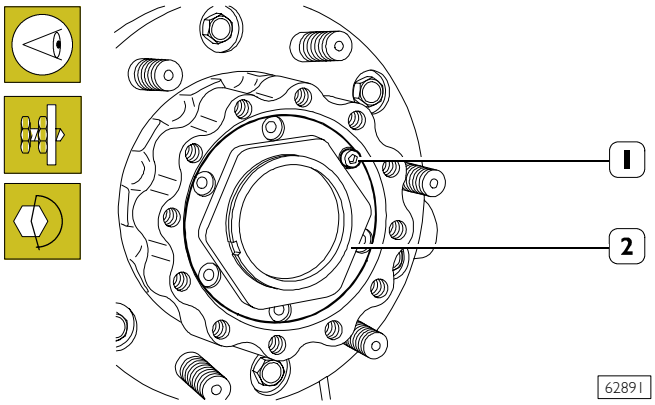

After checking the end play and the rolling torque, check whether one of the adjustment nut (1) holes is coinciding with one of the safety washer holes otherwise loosen the adjustment nut (1) until it is possible to fit the fastening screw (2). Tighten the fastening screw (2) and the adjustment nut to the specified torque.

Figure 29

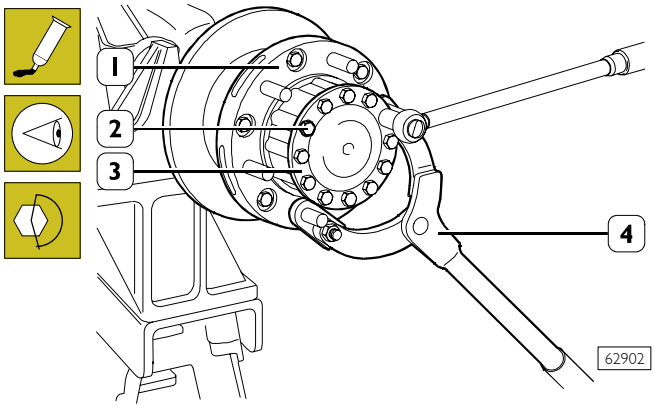

Smear the contact surface between axle shaft (3) and wheel hub (1) with IVECO sealing compound 1905685.
Fit axle shaft (3), tighten the fastening screws (2), excluding those set between the two wheel hub marks (see Figure 30) with tool 99370317 (4) lock wheel hub (1) rotation.

Figure 30

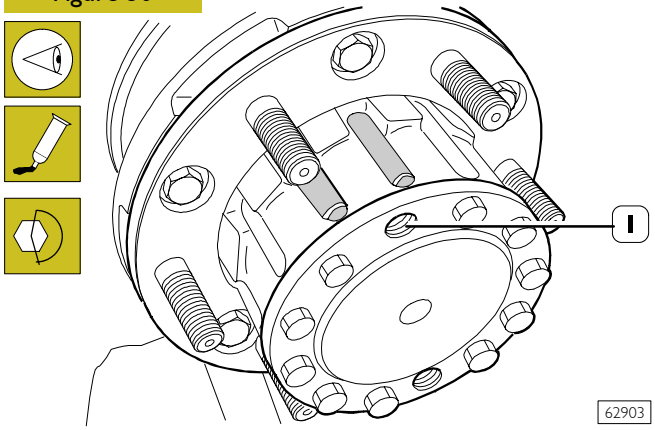

Set horizontally to ground the two holes (1) located between the wheel hub marks and pour through 0.2 l of W140 M-DA oil on each wheel side.

Smear the threaded section of the screws acting as plug with IVECO sealant 1905683 and tighten to the specified torque.

Figure 31

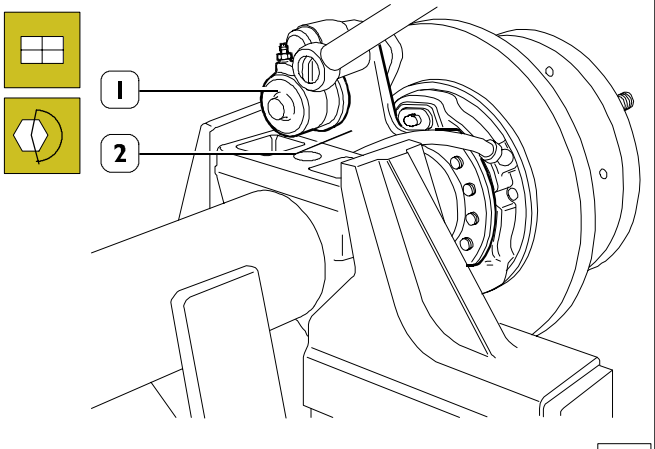

62904

Position brake calliper (1) including the brake lining on the supporting flange (2).
Tighten the fastening screws to the specified torque.

The brake lining with the wear sensor shall be fitted on brake calliper piston side.
Comply with BRAKE section requirements to move back the brake calliper piston.

Figure 32

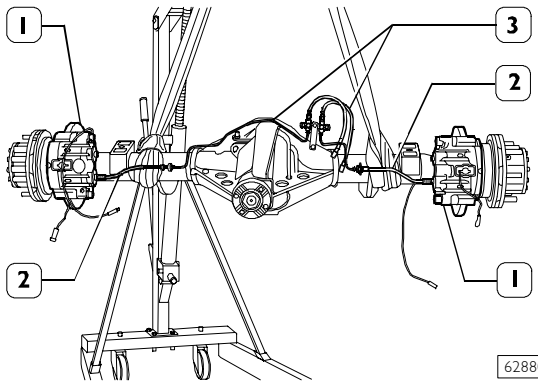

62880

Remove the rear axle assembly from the overhaul stand. Refit brake fluid pipes (2 and 3) to rear axle casing and brake callipers (1).
Fill rear axle casing with oil in the specified amount and quality.

526210 DIFFERENTIAL REPAIR OPERATIONS

526260 Differential locking

Figure 33

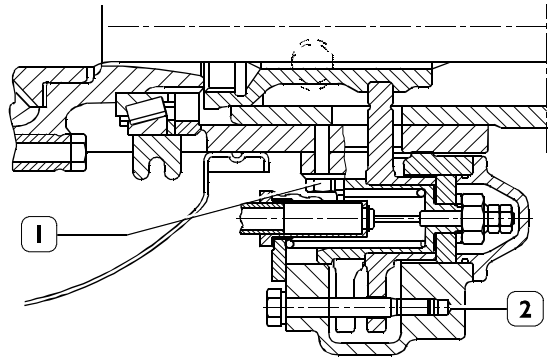

62906

Remove the 4 screws (1) including washers and disconnect the differential locking device (2).
When refitting, replace the gasket located between differential locking device and rear axle casing.
Tighten screws (1) to the specified torque.

Figure 34

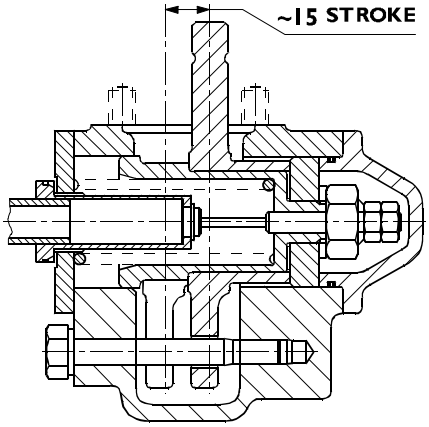

62907

DIFFERENTIAL LOCKING DEVICE SECTION

Differential locking device engagement/disengagement lever stroke shall be equal to 5 mm.

526210 DIFFERENTIAL REPAIR OPERATIONS

Differential unit removal

Before performing differential repair, drain oil and remove axle shafts as described previously.

Figure 35

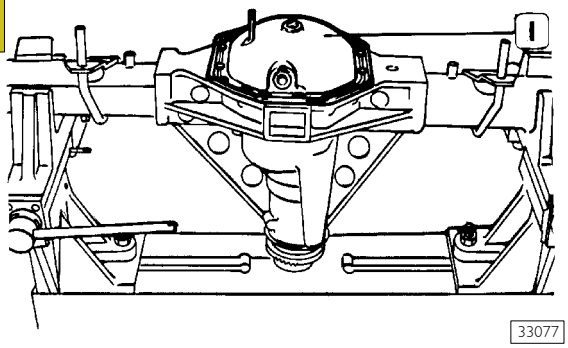

33077

Remove gearing (1) inspection cover including the gasket.

Figure 36

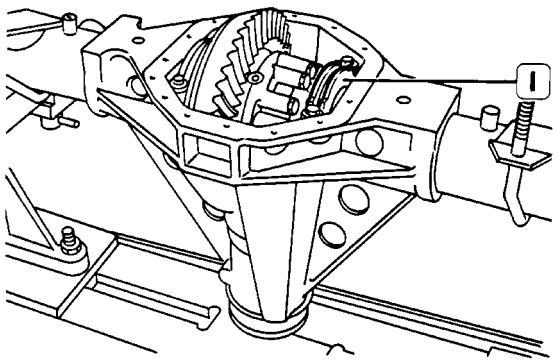

33078

Remove caps (1) after marking them.

Figure 37

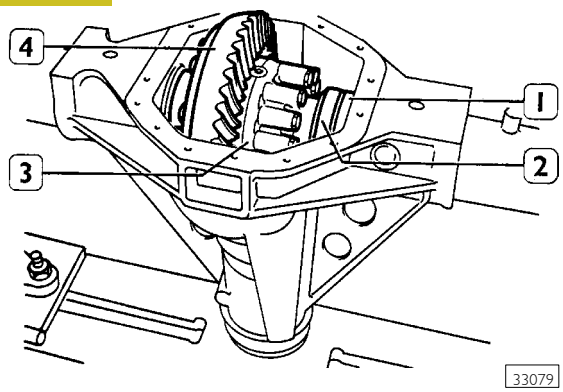

33079

Remove the spacer (1) and remove the gearing case (3) including the crown wheel (4) and the outer rings (2) for supporting bearings. Remove the other spacer and the adjustment rings. Do not reverse the outer races of the gearing case supporting bearings.

Gearing case removal

Figure 38

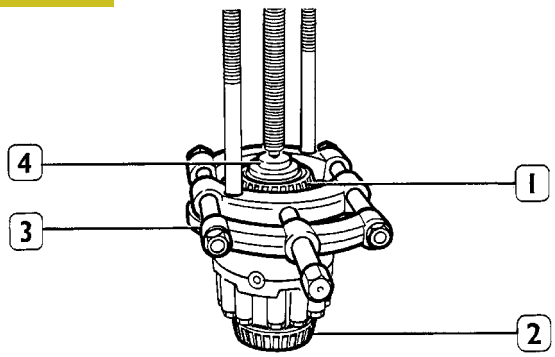

33081

Remove gearing case supporting bearings (1 and 2) using puller 99348001 (3) and counter block 99345056 (4).

Figure 39

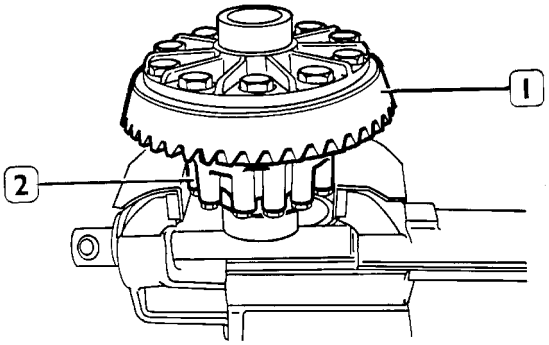

33082

Clamp the gearing case (2) in a vice and remove the ring bevel gear (1) from the gearing case (2).

Figure 40

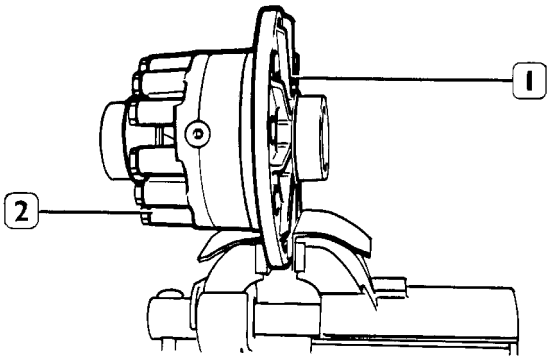

33083

Mark gearing half-boxes (1 and 2), loosen the fastening screws, position the gearing case on a bench and remove the two half-boxes.

Figure 41

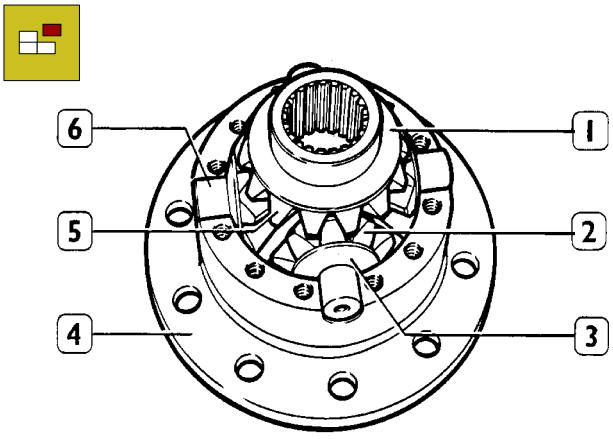

33084

Remove sun gears (5) and planetary gears (2) including the spider (6) from the gearing half-box (4). Recover the shoulder washers (1 and 3).

Figure 42

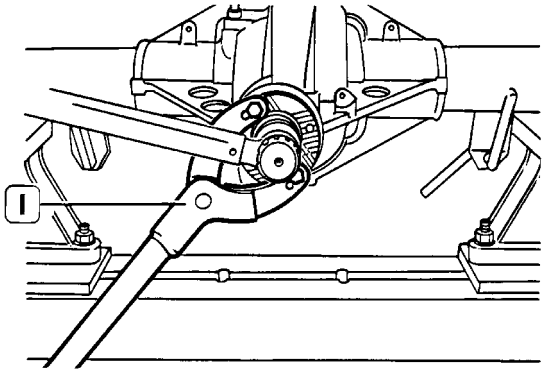

33086

Remove bevel pinion retaining nut safety crimp and loosen the nut using the counter lever 99370317 (1).

Figure 43

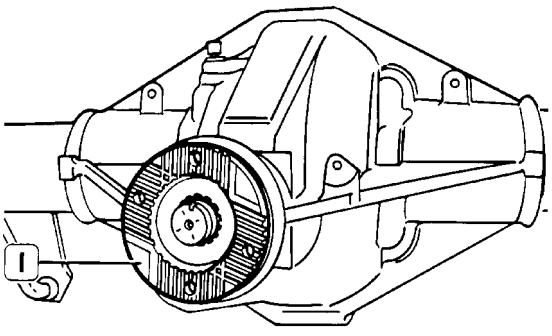

33087

Remove transmission connection flange (1).

Figure 44

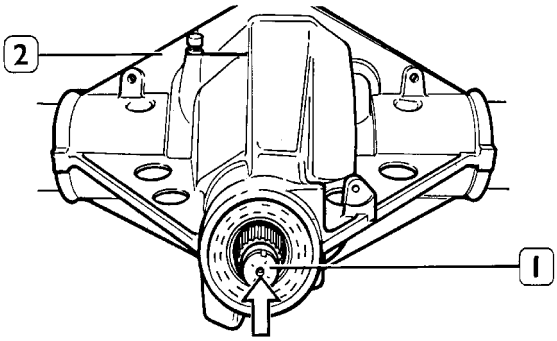

33088

Use a bronze beater in arrow direction to remove the bevel pinion (1) including the rear bearing, the fixed spacer and the adjustment rings from the rear axle casing (2).

Figure 45

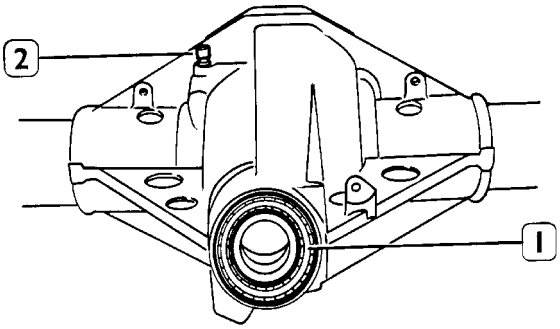

33089

Remove the sealing ring (1) and the front taper roller bearing from the rear axle casing (2). Use a bronze beater to remove the front taper roller bearing outer ring.

Figure 46

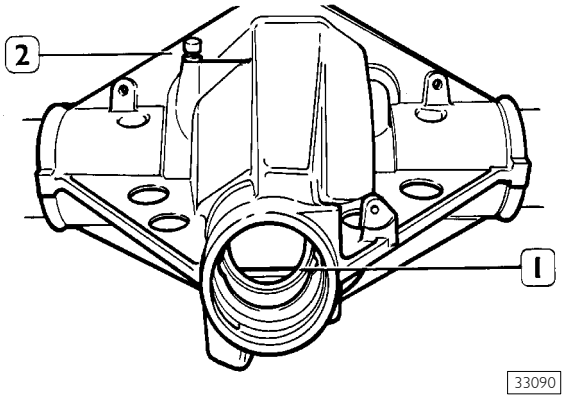

33090

Use a bronze beater to remove the rear taper roller bearing outer ring (1) from the rear axle casing (2).

Figure 47

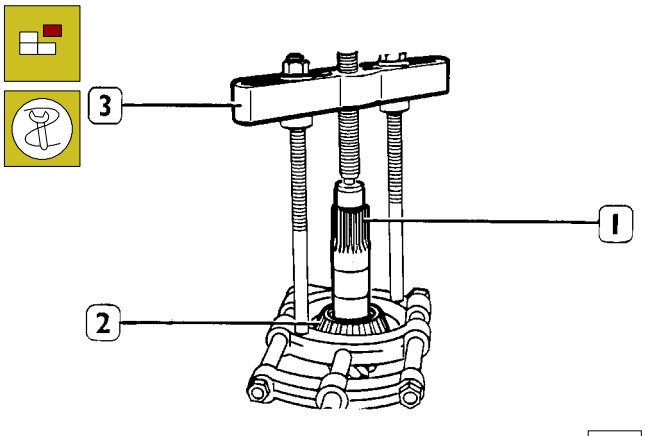

Use puller 99348001 (3) to remove the rear taper roller bearing (2) from the bevel pinion (1).

Differential components check

Carefully clean each differential component.
Lubricate the bearings and rotate the roller cage freely. The rotation must be even and without sign of stiffness. Check the ring bevel gear contact surfaces and the half-box striker plate to ensure that the crown wheel adheres perfectly. Deformations on these surfaces cause the crown wheel fastening screws to vibrate, thus jeopardizing the correct operation of the unit.

Carefully clean all threads in order to obtain exact adjustments and accurate tightening torque.

Check that the splined section for flange-pinion connection is not badly worn, otherwise replace the pinion.

When replacing the crown wheel or pinion it is necessary to replace both parts since they are supplied in pairs.

Check the planetary gears and the relevant shoulder washers, the spider and the crown wheels with the relevant shoulder washers.
Replace all sealing elements, the bevel pinion retaining nut and gearing case bearing adjustment nut with new parts.

Rear axle casing check

Check whether rear axle casing is not deformed.

Gearing case refitting

Figure 48

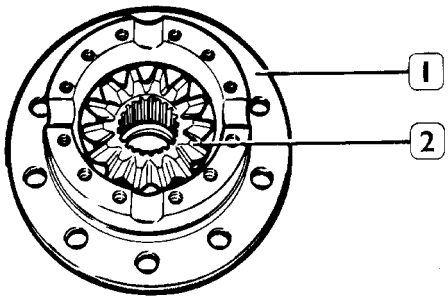

Fit in place the sun gear (2) with the shoulder washer set below in gearing half-box (1).

Figure 49

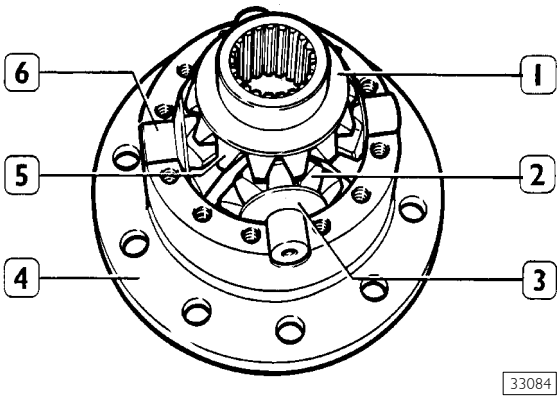

Fit in place the planetary gears (2) with shoulder washers (3), the spider (6) and the sun gear (5) with shoulder washer (1) in the gearing half-box (4).

Figure 50

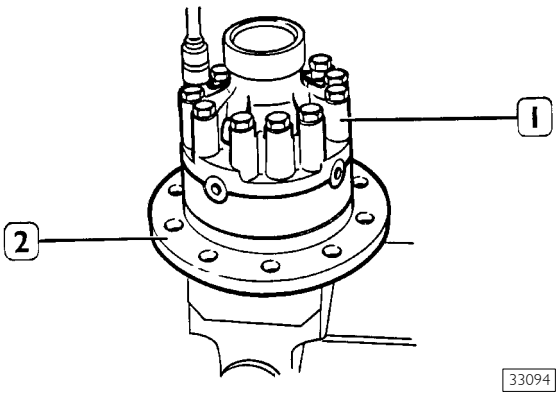

Fit between them the half-boxes (1 and 2) and tighten the fastening screws to the specified torque.

Figure 51

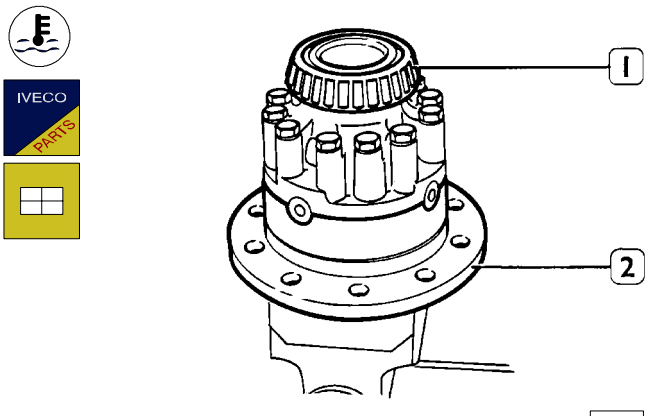

Heat in air-circulation furnace at 100°C for approx. 15' the taper roller supporting bearing (1) on toothing side and fit it down onto the gearing case (2) completely.

Figure 52

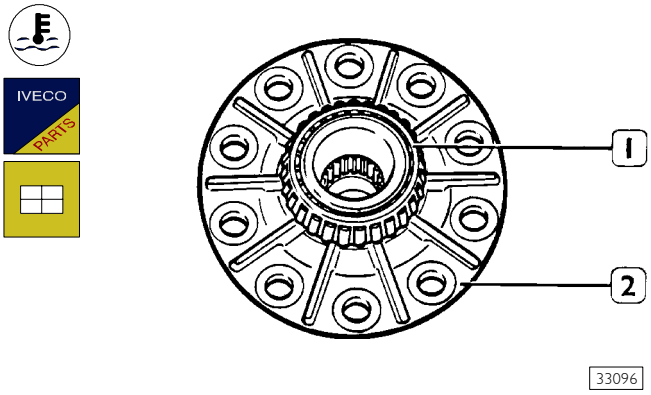

Heat in air-circulation furnace at 100°C for approx. 15' the taper roller supporting bearing (1) on toothing opposite side and fit it down onto the gearing case (2) completely.

Figure 53

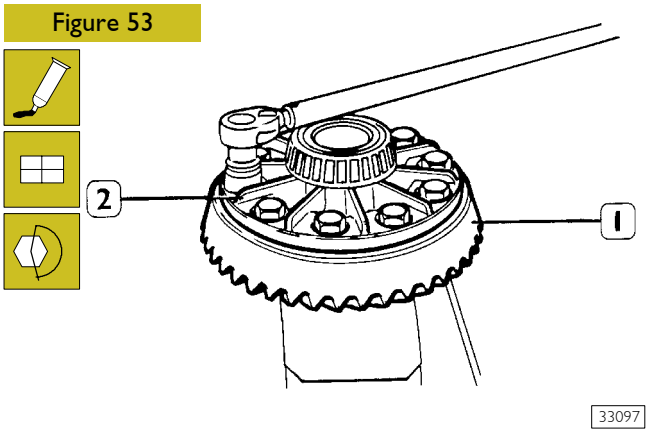

Pour few drops of LOCTITE 270 into crown wheel (1) holes, fit the crown wheel (1) on the gearing case (2) and tighten the fastening screws to the specified torque.

Figure 54

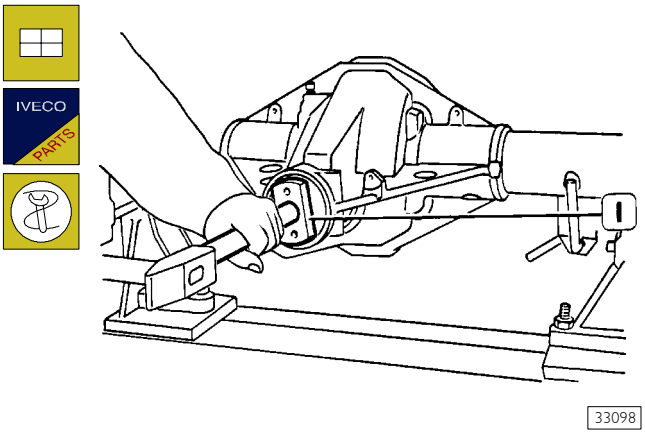

Use beater 99374093 (1) to fit in place front taper roller bearing outer ring on rear axle casing. (See Figure 17 for ring adjustment on beater 99374093).

Figure 55

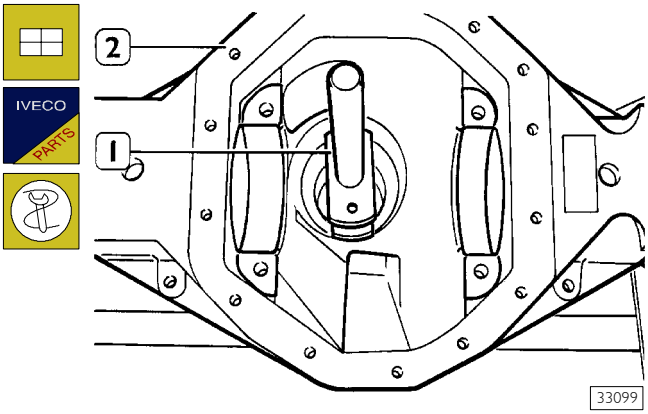

Use beater 99374093 (1) to fit in place rear taper roller bearing outer ring on rear axle casing (2) without adjustment ring.

Figure 56

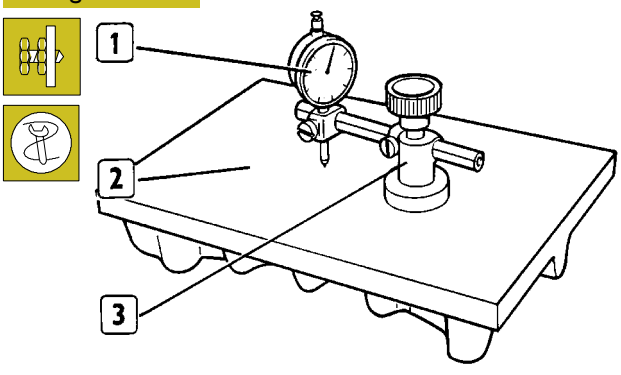

On surface plate (2), set to zero dial gauge 99395728 (1) on support (3) and slightly preload it.

Figure 57

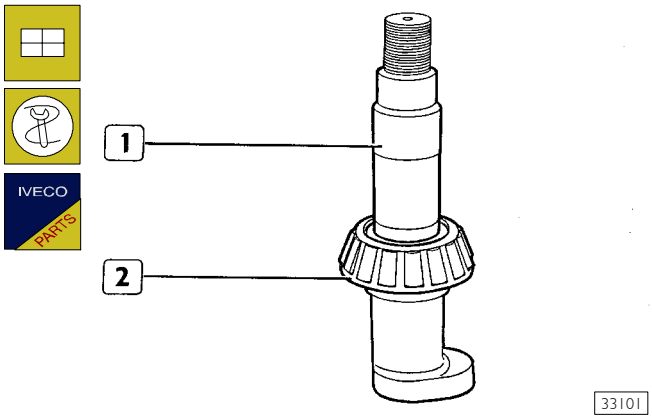

Fit the rear bearing (2) on the false pinion 99370296 (1).

Figure 58

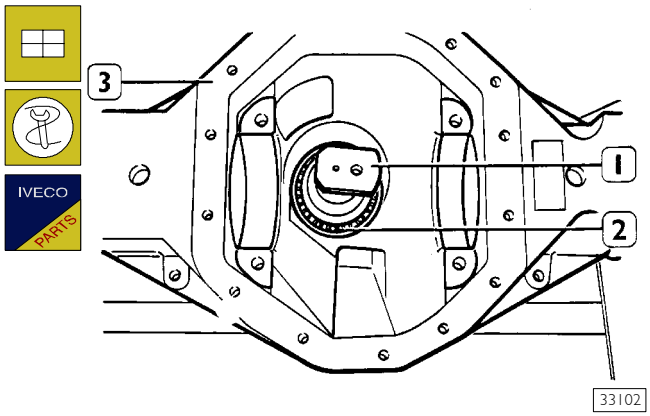

Position the false pinion 99370296 (1) including the rear bearing (2) into its seat on rear axle casing (3).

Fit the front bearing, the transmission connecting flange and the bevel pinion retaining nut and tighten so as to remove end play and to enable false pinion rotation.

Figure 59

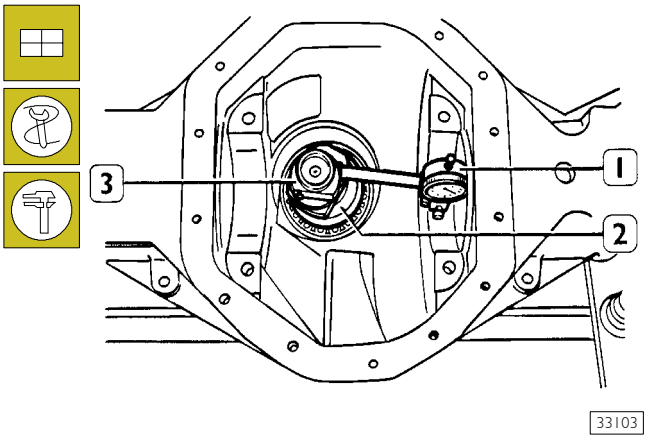

Set dial gauge 99395728 (1) including support (3) on false pinion 99370296 (2).
Direct suitably the dial gauge previously set to zero (see Figure 51) to position the rod to the bottom of the gearing case supporting bearing housing.

Repeat this operation for the other bearing and take note of both found values.

Pinion adjustment ring thickness is obtained through the following formula:

$$S = \frac{A_1 + A_2}{2} - (+B)$$

"S" = thickness of the adjustment rings to be positioned between bevel pinion rear bearing outer ring and rear axle casing.
"A1" = value found on right housing
"A2" = value found on left housing
"B" = reference value marked on bevel pinion (see Figure 60)

Example:

$$S = \frac{3.90 + 4.10}{2} - (\pm 0.05)$$

$$S = \frac{8.00}{2} - 0.05$$

$$S = 4.00 - 0.05$$

$$S = 3.95$$

Adjustment ring thickness shall therefore be: 3.95 mm.

Figure 60

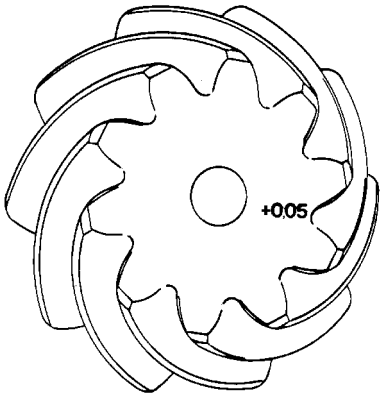

33104

If the value marked on the pinion is preceded by positive sign (+), it shall be subtracted from the value obtained by the sum divided by two of the housings, whereas it shall be added if preceded by negative sign (-).

Figure 61

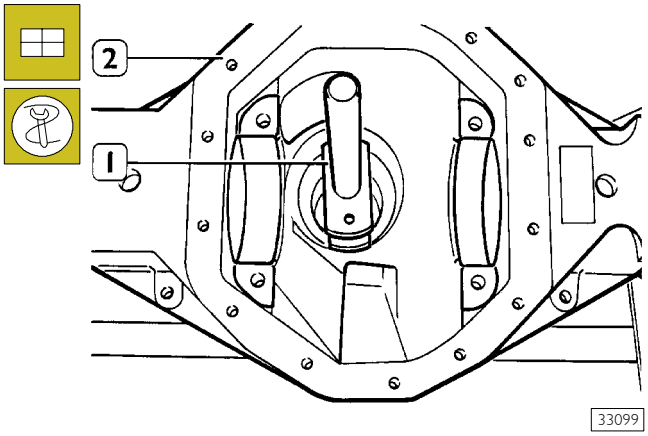

33099

Choose an adjustment ring having the same thickness obtained by using the formula shown in Figure 58 and fit it into the rear axle casing after removing rear taper roller bearing outer ring previously mounted.
Use beater 99374093 (1) to fit definitely the rear taper roller bearing outer ring into rear axle casing (2).

Figure 62

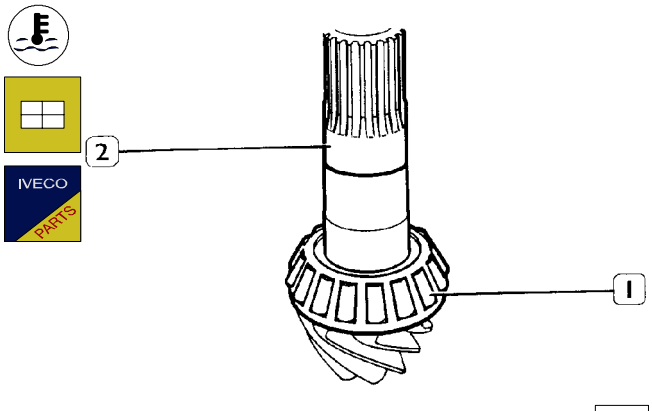

32481

Heat the rear bearing (1) to 100°C for approx. 15' into an air-circulation furnace and then fit it down onto the bevel pinion (2).

Figure 63

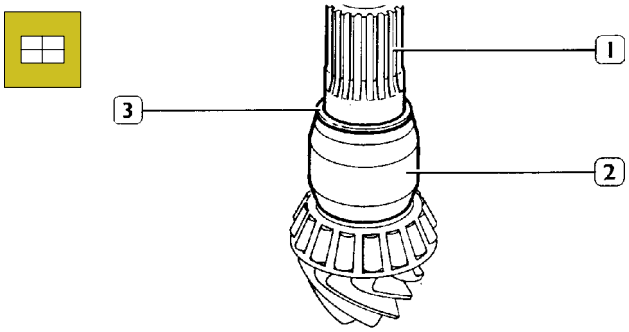

32482

Position the fixed spacer (2) and the adjustment ring (3), previously used to obtain the specified rolling torque, on the bevel pinion (1).

Figure 64

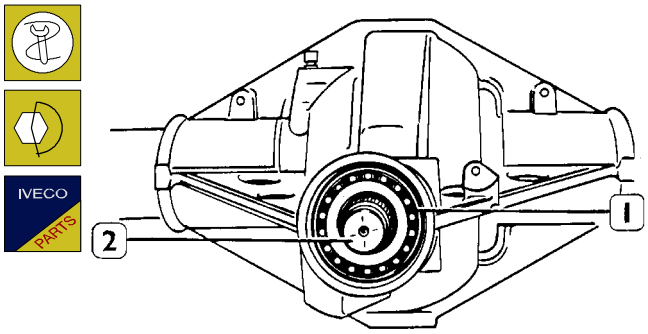

33111

Position the complete bevel pinion into the rear axle casing. Heat the front bearing (1) to 100°C for approx. 15' into an air-circulation furnace and then fit it down onto the bevel pinion (2).

Figure 65

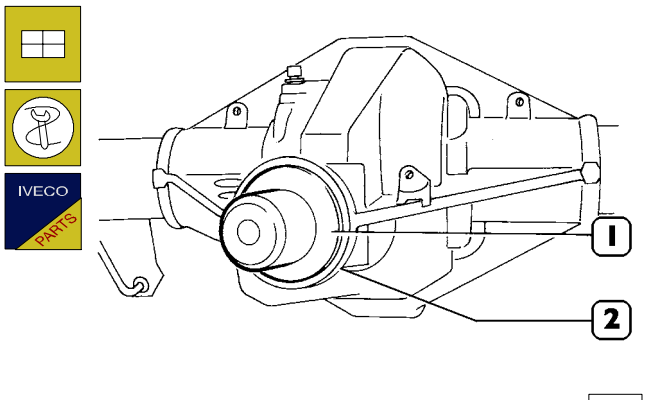

Fit the seal ring (2) in the axle casing with tool 99374201 (1).

Figure 66

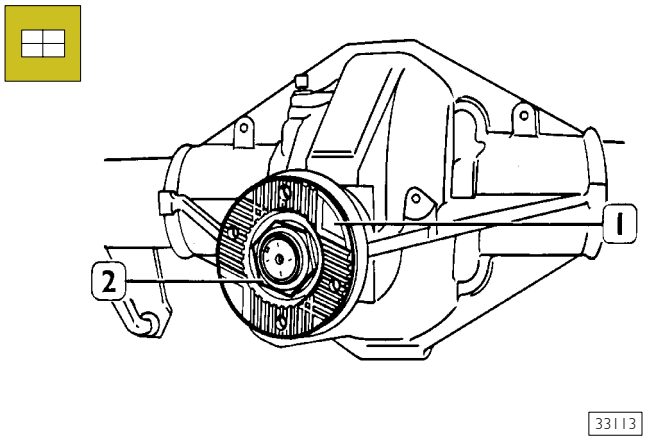

Fit the transmission connecting flange (1) and the bevel pinion retaining nut (2).

Figure 67

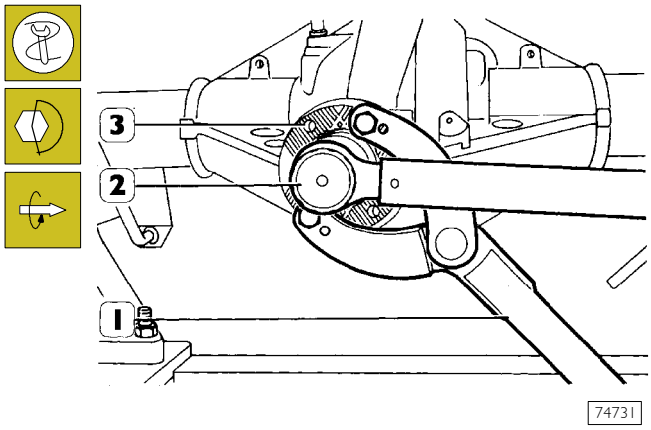

Assemble the flange (3) and prevent rotation with tool 99370317 (1).
Using the torque wrench (2), tighten the bevel pinion flange (3) retaining nut to the correct torque value.

Figure 68

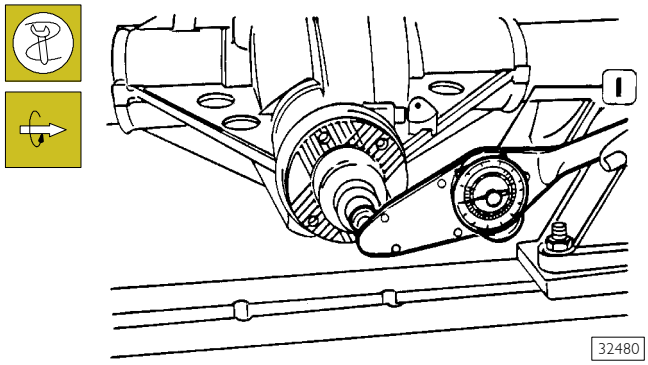

Using the torque wrench 99389819 (1), measure the rolling torque of the bevel pinion.

The rolling torque must be measured at an ambient temperature of 25°C, making the pinion turn at a speed of 50 rpm after it has made 10 turns.

If the value is incorrect disassemble the pinion (2, Figure 64), and replace the adjuster ring (3, Figure 63) with a suitable ring.
Refit the pinion and repeat the rolling torque check.

Differential unit refitting

Figure 69

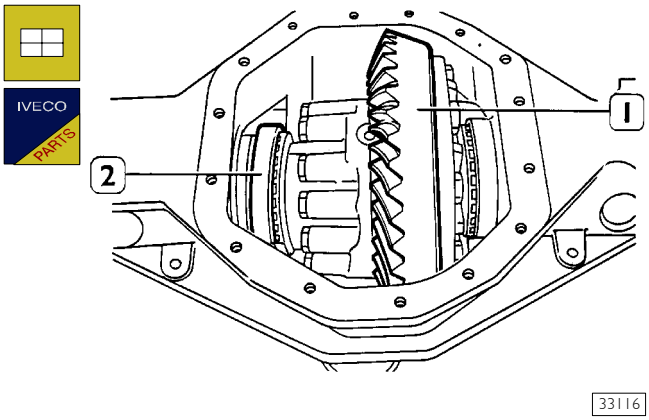

Fit gearing case supporting bearing outer rings (2) and then position the gearing case (1), previously fitted, in the rear axle casing.

Figure 70

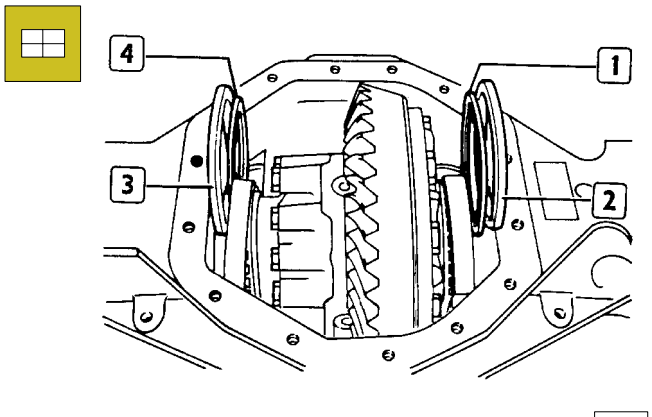

33117

Insert the spacer (2), adjuster ring (1), adjuster ring (4) and then spacer (3).

Figure 71

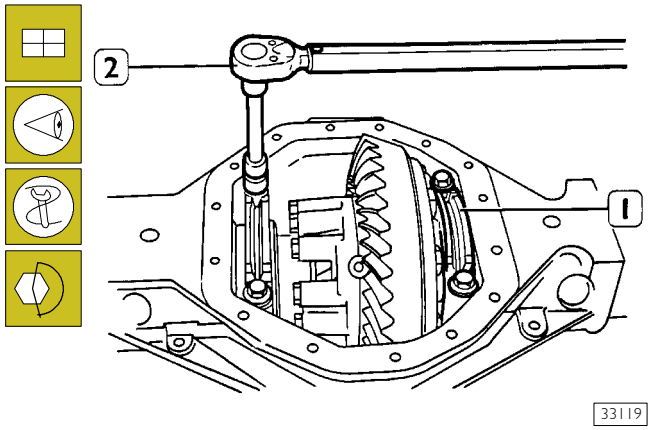

33119

Refit caps (1) taking into account the marks made at removal.
Use dynamometric wrench 99389827 (2) to tighten the fastening screws to the specified torque.
Set gearing case supporting bearings and check total rolling torque.

The rolling torque must be measured at an ambient temperature of 25°C, making the pinion turn at a speed of 50 rpm after it has made 10 turns.

Figure 72

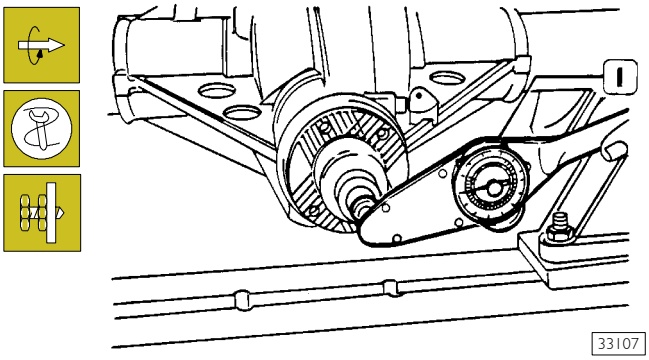

33107

Use dynamometric wrench 99389819 (1) to check total rolling torque:

$$Ct = Cp + \left(\frac{Cd}{R} \times 0.99\right)$$

Ct = total rolling torque

Cp = bevel pinion bearing rolling torque

Cd = 2 ÷ 2.8 Nm (0.2 ÷ 0.29 kgm)

R = Rear axle reduction ratio

Example:

$$Ct = 2.5 + \left(\frac{2.8}{3.91} \times 0.99\right)$$

$$Ct = 2.5 + 0.71$$

Ct = 3.21 Nm (0.33 kgm)

If the value is incorrect, replace the adjuster rings (1 and 4, Figure 70) with rings of the correct thickness.

Figure 73

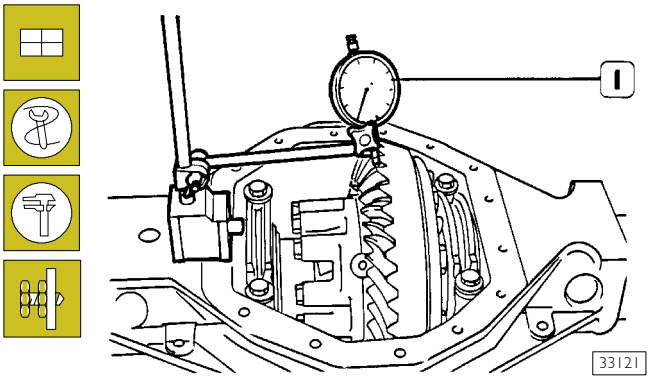

33121

Position magnetic dial gauge 99395684 (1) and check the clearance between the pinion and crown on four equidistant teeth on the crown. The average of the measurements must equal the required value. If a different clearance is found, remove the caps (3) again and swap over the assembly position of the adjustment rings (1 and 4, Figure 70).
If this is not sufficient, replace the adjustment rings with ones of a different thickness, but the total thickness must still be the same as that of the adjustment rings removed.
This is so as not to change the total rolling torque.
Apply a thin layer of Prussian blue on ring gear teeth by brush.
Turn the pinion and measure the impression of the contact of the pinion toothing on the crown wheel toothing.
Here we illustrate the possible contacts with the corrections to obtain precise coupling of the crown wheel and pinion.

Figure 74

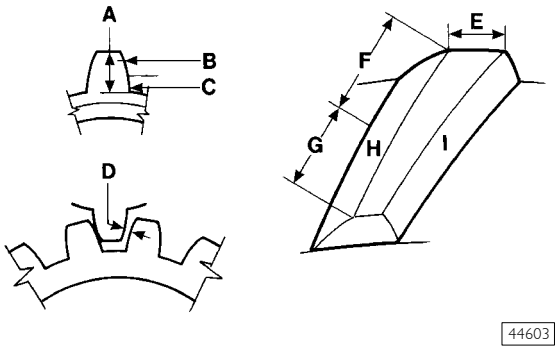

A = Coupling depth
B = Crest
C = Side
D = Play

E = Greater base
F = Heel
G = Top land
H = Contact surface
I = Lateral surface

Figure 75

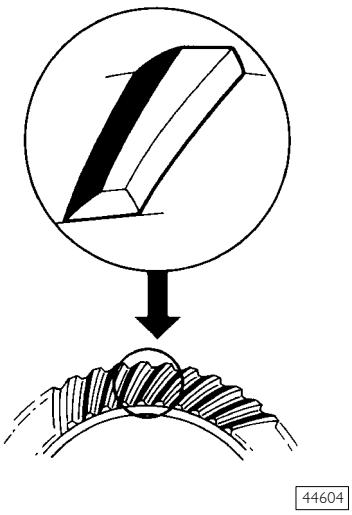

Correct contact

Figure 76

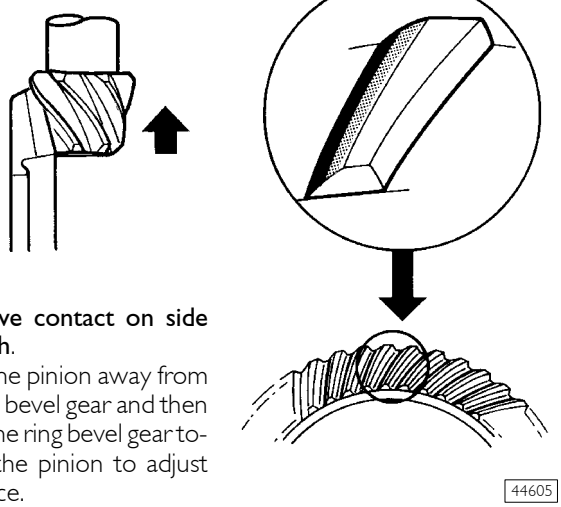

Excessive contact on side of tooth.
Move the pinion away from the ring bevel gear and then move the ring bevel gear towards the pinion to adjust clearance.

Figure 77

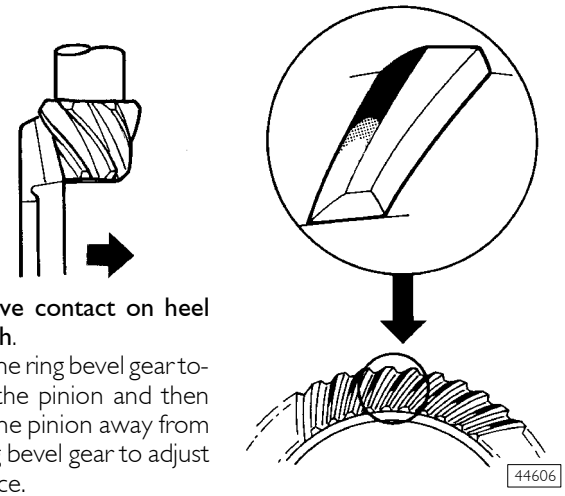

Excessive contact on heel of tooth.
Move the ring bevel gear towards the pinion and then move the pinion away from the ring bevel gear to adjust clearance.

Figure 78

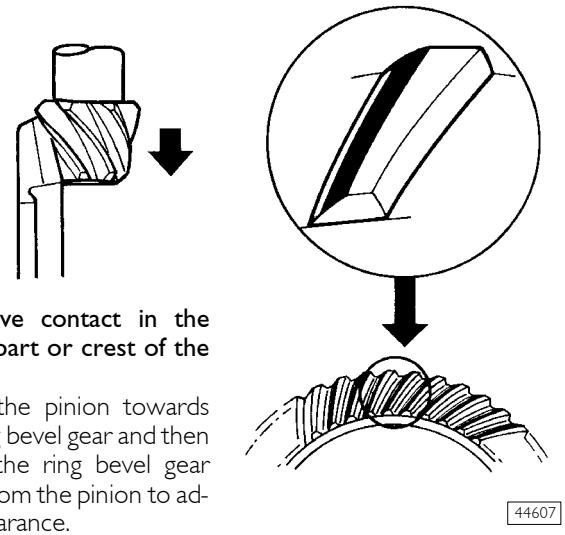

Excessive contact in the upper part or crest of the tooth.
Move the pinion towards the ring bevel gear and then move the ring bevel gear away from the pinion to adjust clearance.

Figure 79

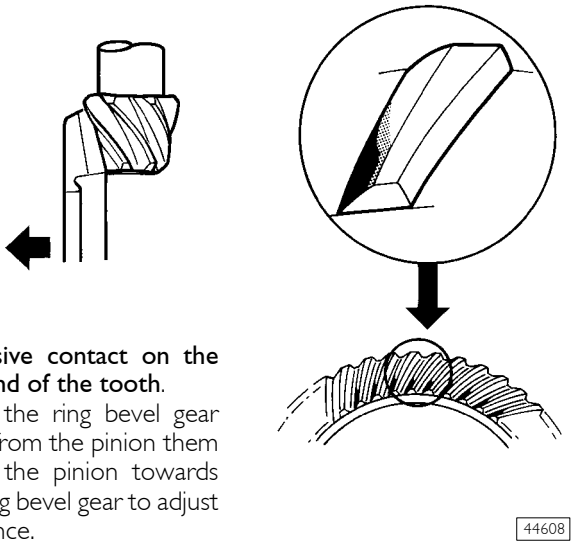

Excessive contact on the top land of the tooth.
Move the ring bevel gear away from the pinion them move the pinion towards the ring bevel gear to adjust clearance.

Figure 80

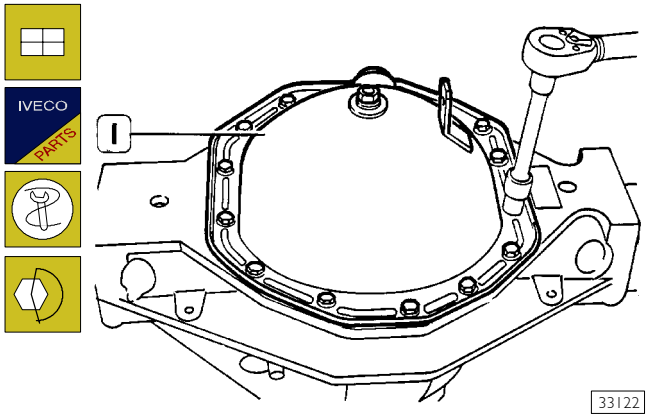

Fit a new sealing gasket on gearing inspection cover connection surface. Fit cover (1) and use dynamometric wrench to tighten the fastening screws to the specified torque.

Do not tighten screws at higher torque value since this shall jeopardize the effect of the sealing gasket located between the connection surface and the gearing inspection cover.

Figure 81

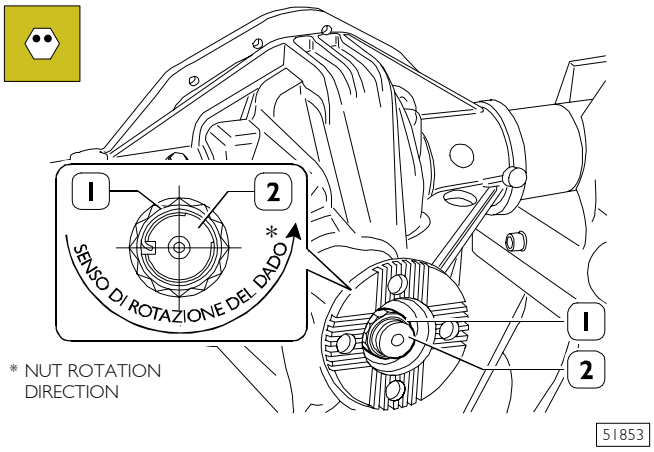

Crimp nut (1) collar on bevel pinion (2) milling as shown in the figure.

Figure 82

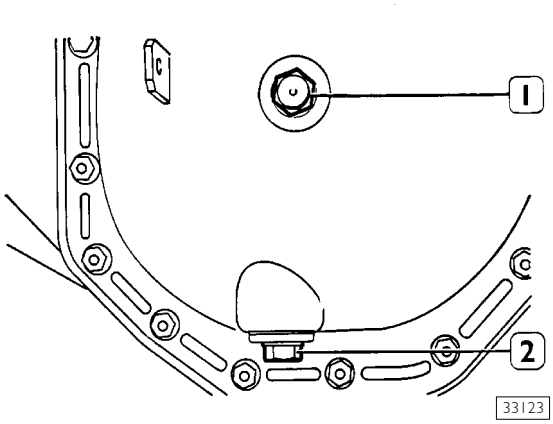

Fit oil drain plug (2). Pour 3 litres of W140MDA oil through the proper hole and fit inspection and filling plug (1).

SECTION 7

5206 Axles

Page

This section contains:

DIAGNOSTICS 3
AXLE 5817 7
AXLE 5818 21
AXLE 5819 29
AXLE 5823 37
WHEEL GEOMETRY 49

DIAGNOSTICS

Front axle main working faults:

1 - Stiff steering;
2 - Wobble;
3 - Noise.

1 STIFF STEERING

Front wheels not aligned. – YES → Align front wheels.

NO ↓

Irregular wheel toe-in. – YES → Adjust front wheel toe-in.

NO ↓

Irregular tyre pressure. – YES → Inflate tyres to prescribed pressure.

NO ↓

Elements involved in the stub axle rotation on the pin inefficient. – YES → Check and replace the elements deteriorated.

2 WOBBLE

Irregular wheel camber. – YES → Check the tie rod assembly, adjust or repair the deformed parts.

NO

Front wheels not aligned. – YES → Align front wheels.

NO

Irregular wheel toe-in. – YES → Correctly adjust toe-in.

NO

Steering gear tie rod king-pins inefficient. – YES → Replace defective parts.

NO

Irregular play of wheel hub bearings. – YES → Replace the wheel hubs.

NO

Eccentric wheels:
eccentric, deformed rim
tyre assembled on wrong rim. – YES → Replace the wrong rim.
Deflate and centre the tyre on the rim.

NO

Unbalanced wheels. – YES → Balance the wheels.

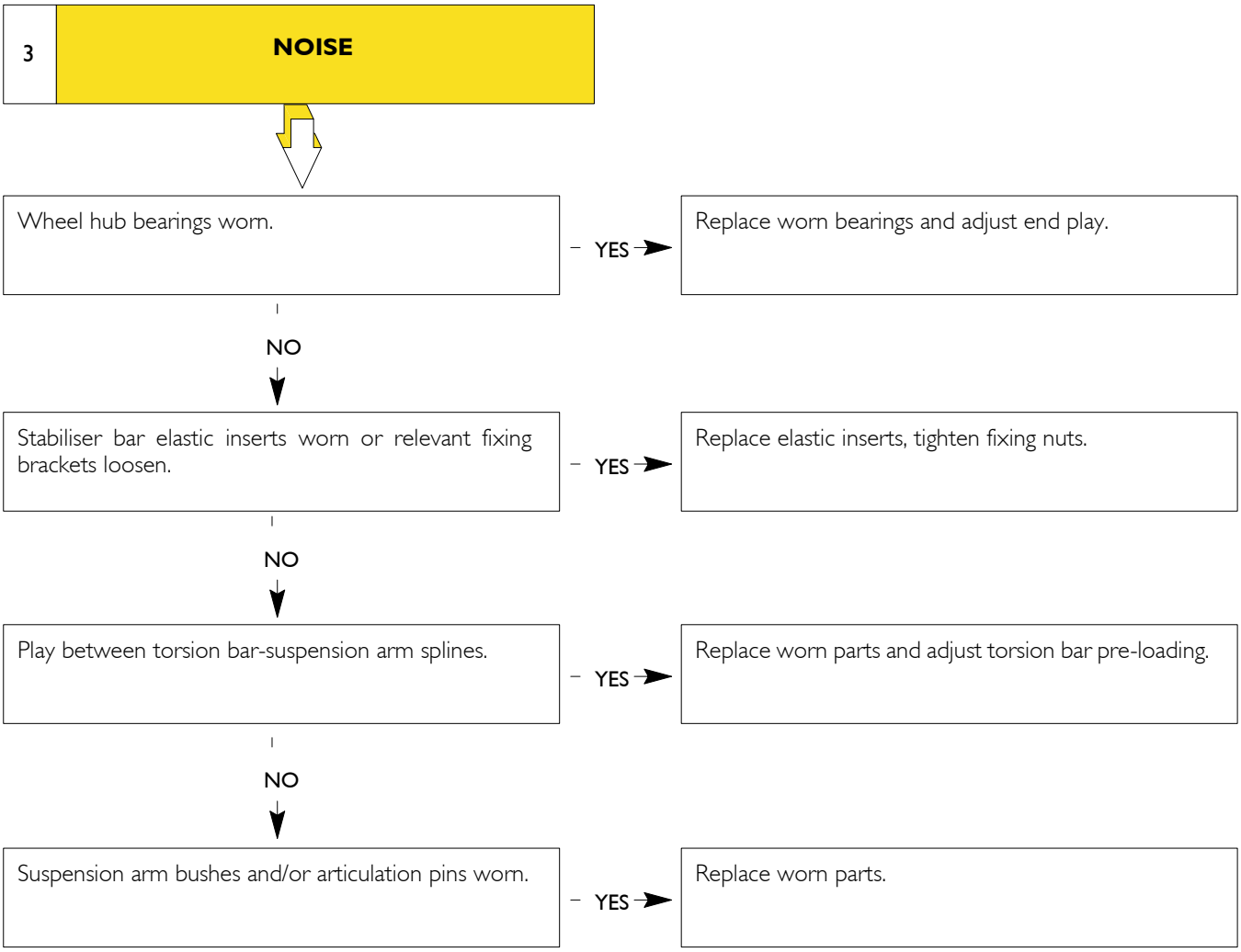
3
NOISE
Wheel hub bearings worn.
YES
Replace worn bearings and adjust end play.
NO
Stabiliser bar elastic inserts worn or relevant fixing brackets loosen.
YES
Replace elastic inserts, tighten fixing nuts.
NO
Play between torsion bar-suspension arm splines.
YES
Replace worn parts and adjust torsion bar pre-loading.
NO
Suspension arm bushes and/or articulation pins worn.
YES
Replace worn parts.

Axle 5817

Page

DESCRIPTION 9

SPECIFICATIONS AND DATA 10

TIGHTENING TORQUES 11

TOOLS 12

REMOVING AND REFITTING AXLE 5817 13

❑ Removal 13

❑ Refitting 13

REPAIRS 15

OVERHAULING AXLE 5817 15

❑ Wheel hub removal and refitting 15

❑ Removal 15

❑ Replacing phonic wheel 16

❑ Refitting 16

STUB AXLE REMOVAL-REFITTING 17

❑ Removal 17

❑ Refitting 19

DESCRIPTION

The front axle 5817 is composed of a load-bearing cross member on which are mounted the suspensions and power steering.

The stub axles turn, by means of swivel heads, on the ends of the suspensions.

The steering levers are cast on the king-pin of the stub axles to which are secured the brake calipers.

The wheel hubs are supported on the pins of the stub axles by UNIT - BEARINGS that need neither lubrication nor adjustment.

The wheel rims are secured onto the wheel hubs by five screws.

Figure 1

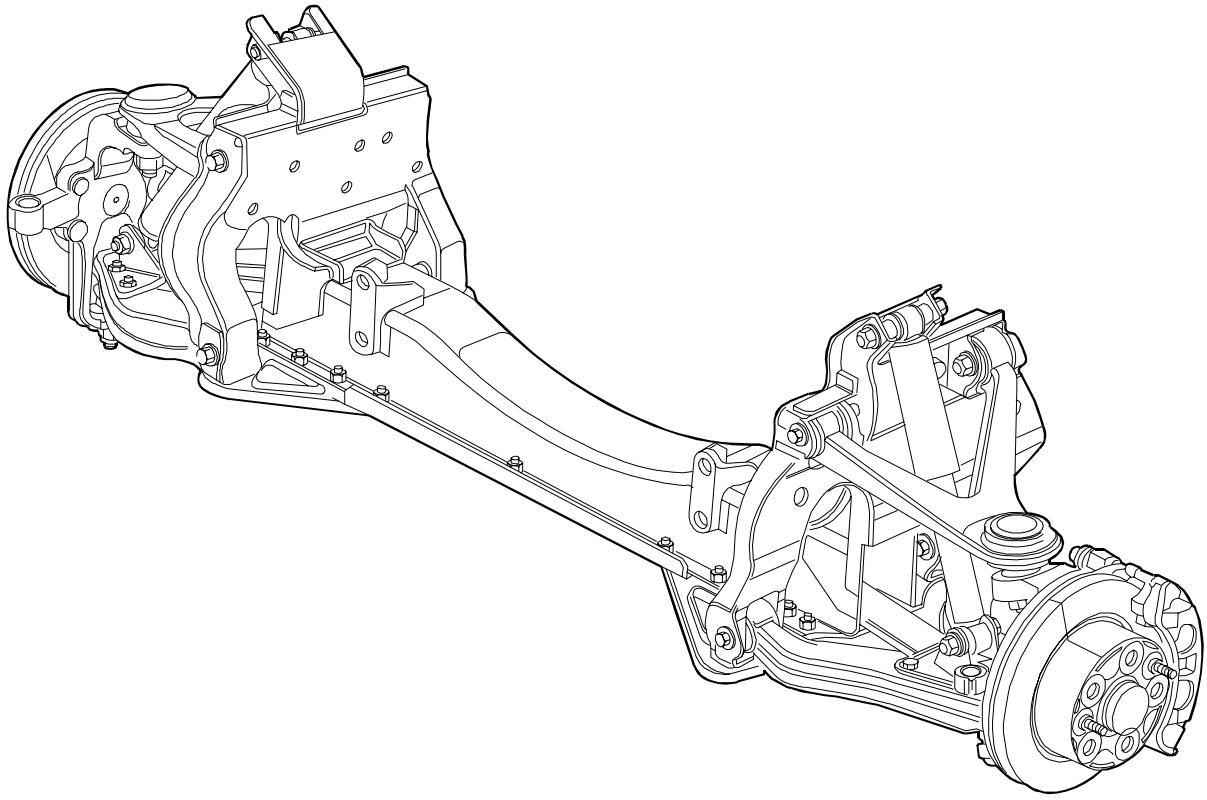

52247

SPECIFICATIONS AND DATA

Axle type	5817
WHEEL HUBS	
Wheel hubs bearings	UNIT BEARING
Hub bearings end play	-
Wheel hub bearings play adjustment	Not Adjustable Fixing nut torque tightening
WHEEL GEOMETRY	
Wheel camber angle (vehicle at static load)	0° ± 20'
Wheel caster angle (vehicle at static load)	3° ± 20'
Wheel toe-in (vehicle at static load)	2 ± 1 mm

TIGHTENING TORQUES

Figure 2

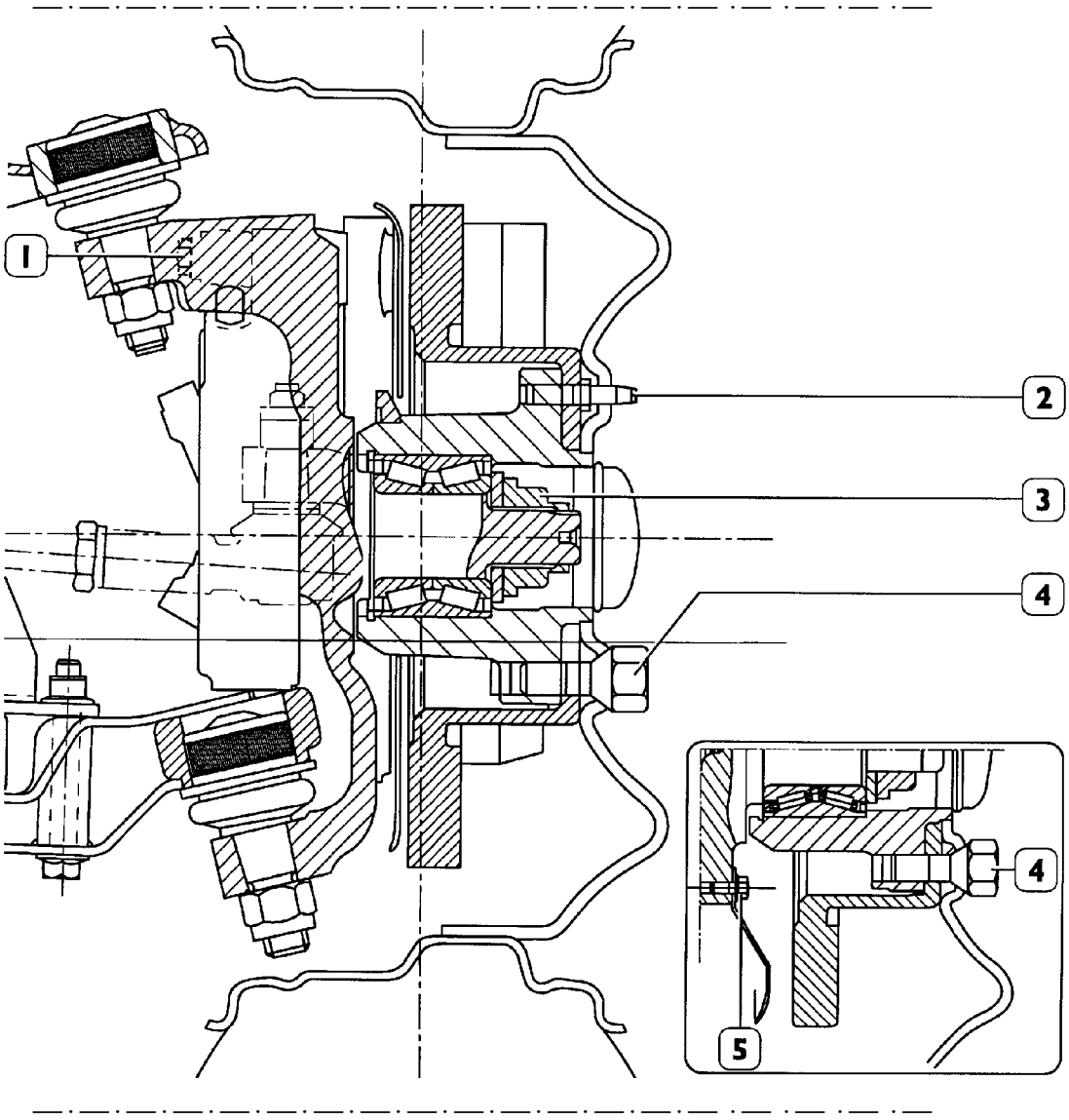

AXLE 5817

PART		TORQUE	
		Nm	kgm
1	Screw securing caliper mounting to stub axle	170 ÷ 196	17 ÷ 19.6
2	Screw securing brake disc to wheel hub	19.5 ÷ 24	1.9 ÷ 2.4
3	Nut securing wheel hub	256 ÷ 314	25.6 ÷ 31.4
4	Screw securing wheel	160	16
5	Screw securing stub axle guard	6 ÷ 7.5	0.6 ÷ 0.7
-	Screw securing caliper to caliper mounting	176 ÷ 217	17.6 ÷ 21.7

TOOLS

TOOL NO.		DESCRIPTION
99305354	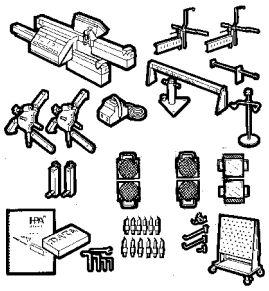	Portable optical reading tool for checking wheel trim
99321024	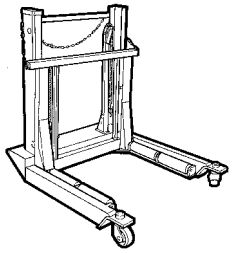	Hydraulic trolley for removing/refitting wheels
99322215	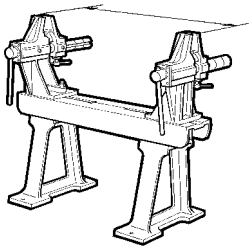	Guide to wheel hub assembly
99347074	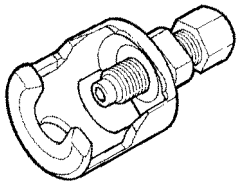	Puller for steering tie rod king-pins

REMOVING AND REFITTING AXLE 5817

Removal

Set the vehicle on solid, level ground.

Lock the rear wheels with scotches, remove the wheel rim guards and loosen the screws or nuts fixing the wheel.

Lift the front of the vehicle and rest the chassis frame on supports.

Take out the screws or nuts fixing the wheel and remove them with tool 99321024.

From underneath the vehicle:

- ❑ remove the central guard (15) under the engine by taking out the screws securing it to the side guards and to the front cross member of the chassis frame;
- ❑ remove the engine side guards (6) and (19) by taking out the screws securing them to the chassis frame;
- ❑ remove the gearbox side guards (5) and (20) by taking out the screws securing them to the chassis frame and the nuts securing them to the cross member under the gearbox (23);
- ❑ disconnect the brake fluid pipe (21) from the retaining blocks on the axle (22);
- ❑ drain off the power-steering fluid and disconnect the pipes (11) and (12) in correspondence with the fittings on the hydraulic power steering (13);
- ❑ disconnect the power steering column in correspondence with the coupling (14).

If it is decided to leave the brake callipers on the axle, proceed to:

- ❑ disconnect the electrical connection (1) signalling brake lining wear and the ABS sensor (4) if there is one;
- ❑ disconnect the brake fluid pipes in correspondence with the fittings (7) and (18) after draining the system.

If it is decided to leave the brake callipers on the vehicle, proceed to:

- ❑ disconnect the brake fluid pipes from the axle (22) in correspondence with the brackets (8, 10, 16, 17);
- ❑ then disconnect the brake callipers (3) from their respective stub axles by taking out the screws (2) and supporting the callipers to prevent any strain on the pipes.

To complete removing the axle:

- ❑ unscrew five of the six fixing screws (9) on both sides of the chassis frame;
- ❑ put a hydraulic lift under the axle and take out the last two screws;
- ❑ lower the hydraulic jack and extract the axle.

Refitting

Reverse the steps described for removal tightening the screws or nuts to the prescribed torque.

Adjust the load of the torsion bar as illustrated under the specific heading.

Top up the power-steering fluid.

If the brake callipers have been left on the axle, restore the brake fluid level and bleed off any air.

Check and adjust the front wheel geometry.

Figure 3

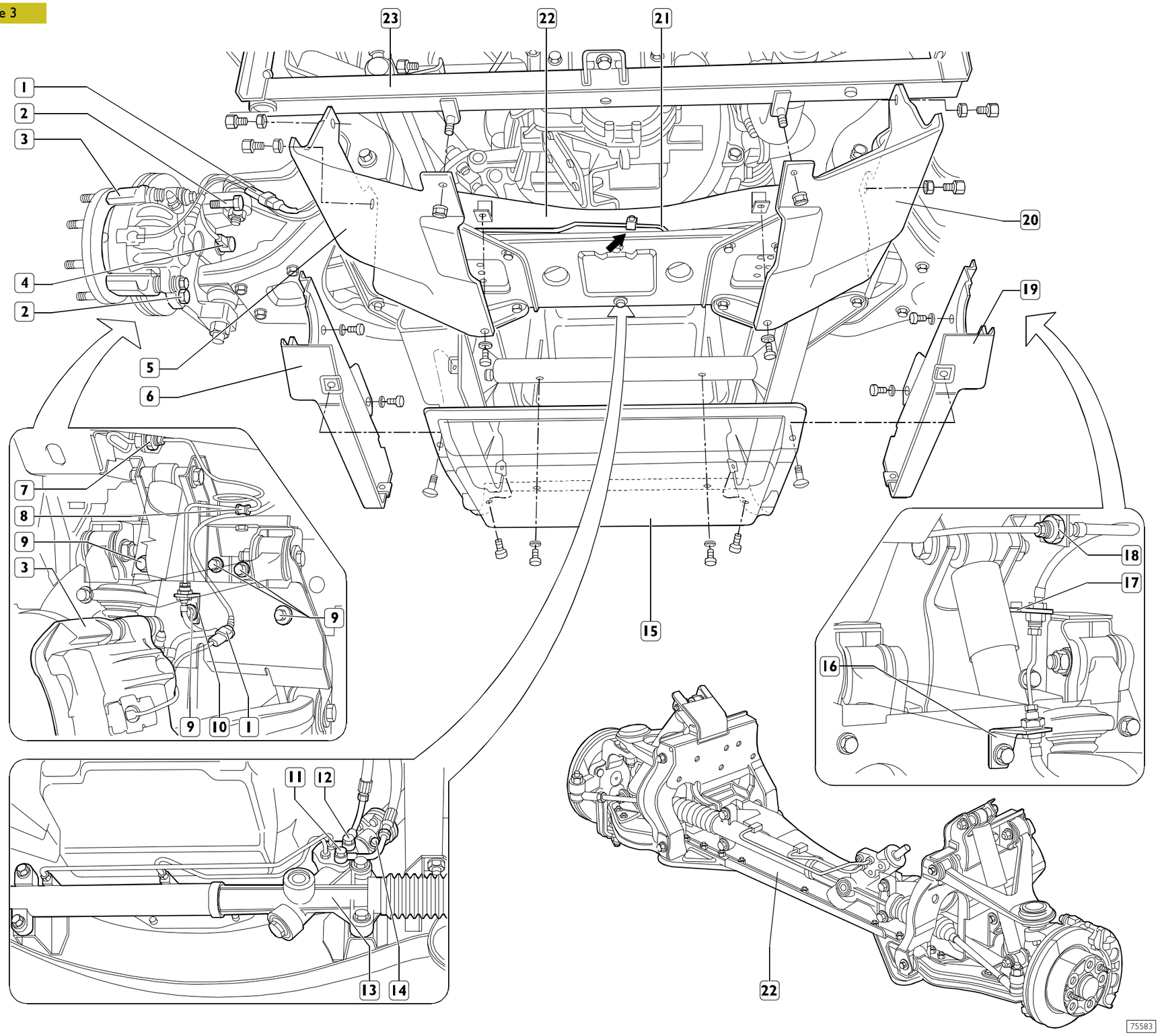

REPAIRS

520610 OVERHAULING AXLE 5817

Figure 4

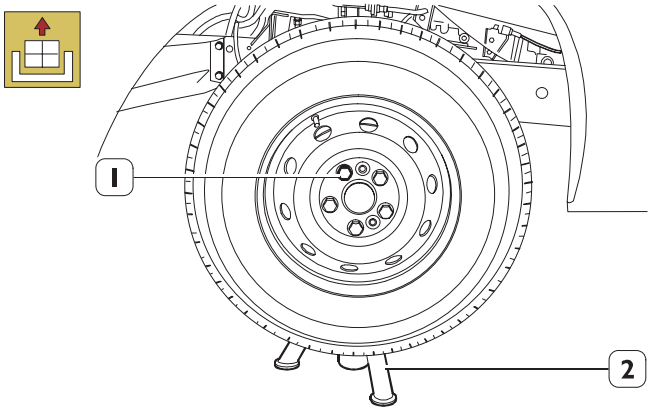

Remove the wheel rim cup.

Free the screws (1) securing the wheel rim.

Lift the vehicle and put the stands (2) under the structural members in a forward position.

Unscrew the screws (1) and remove the entire wheel.

520620 Wheel hub removal and refitting

Removal

Figure 5

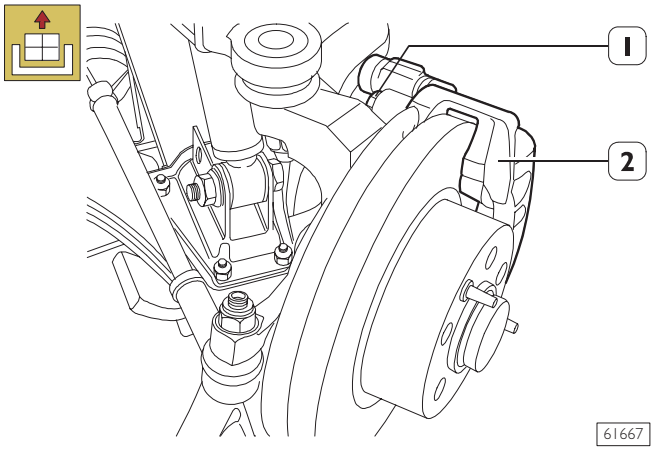

Take out the screws (1) and remove the mounting with the brake caliper (2) from the stub axle.

Support the brake caliper suitably to prevent strain on the oil pipe.

Figure 6

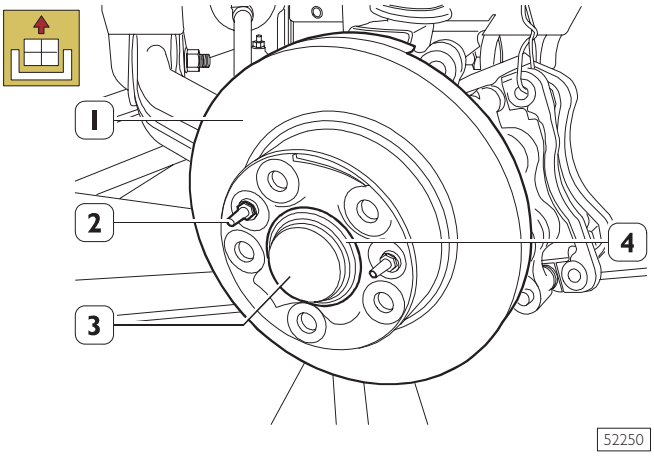

Remove the two centring pins (2) and detach the brake disc (1) from the wheel hub (4).

Remove the cup (3) from the wheel hub (4).

Check the state of the brake disc and linings as described in the BRAKE SYSTEM section.

Figure 7

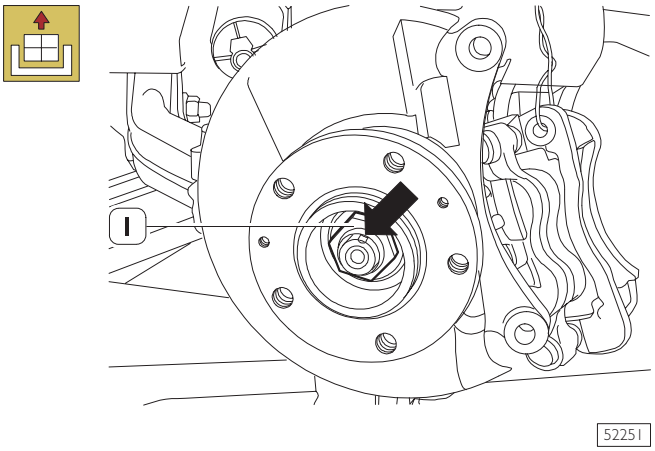

Lift the deformation (⇒) of the nut (1) and unscrew this with a suitable wrench.

Figure 8

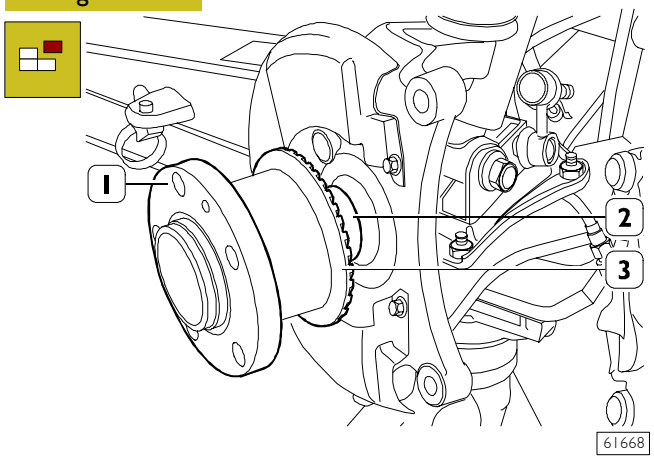

Extract the wheel hub (1) from the pin of the stub axle (2).

If any trouble is found with the wheel hub or bearing, the assembly needs to be replaced since the parts are not supplied as single spares.

When repairing the wheel hub (1), take care not to damage the phonic wheel (3).

526712 Replacing phonic wheel

Figure 9

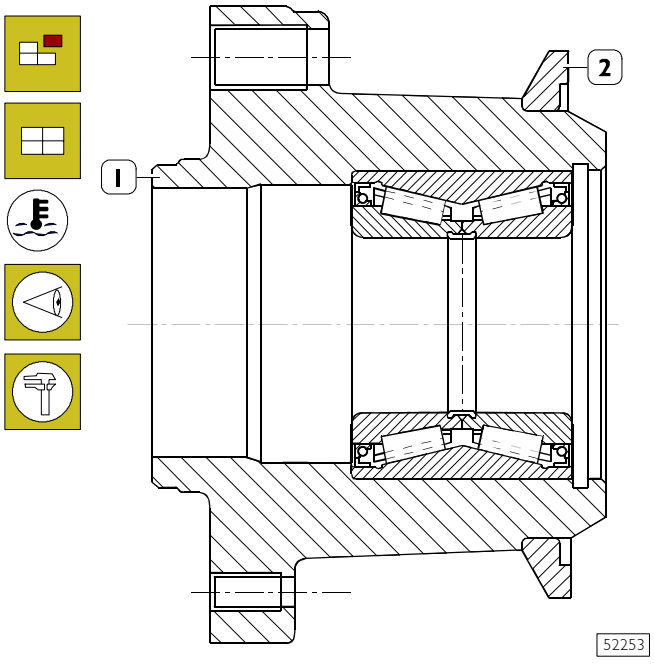

The phonic wheel (2) is extracted from the wheel hub (1) with general tools: minimum extraction load 300 kg.

The phonic wheel should be mounted on the wheel hub after heating it to a temperature of 150°C.

On completing assembly, make sure the phonic wheel sits in its seat in the hub properly.

Check that the orthogonality and oscillation of the phonic wheel is no greater than 0.3 mm.

Refitting

Figure 10

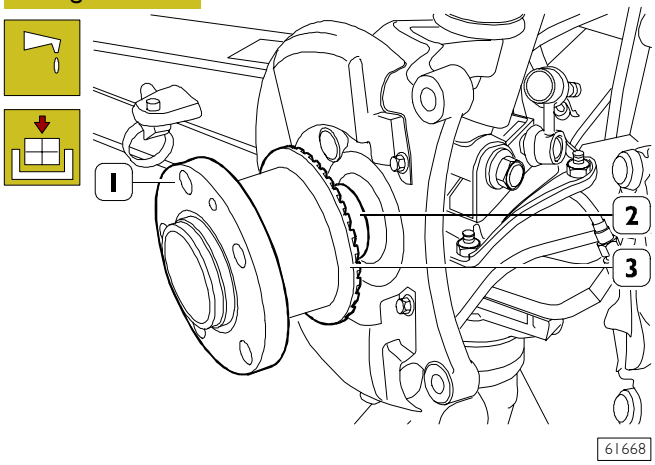

Lubricate the surface of the stub axle pin (2) with TUTELA MR3 grease and key the wheel hub (1).

The wheel hub must be keyed without forcing.. If there are difficulties, do not assemble since the bearing may be damaged.
Extract the wheel hub, check the cause of the difficulties and eliminate them.

Figure 11

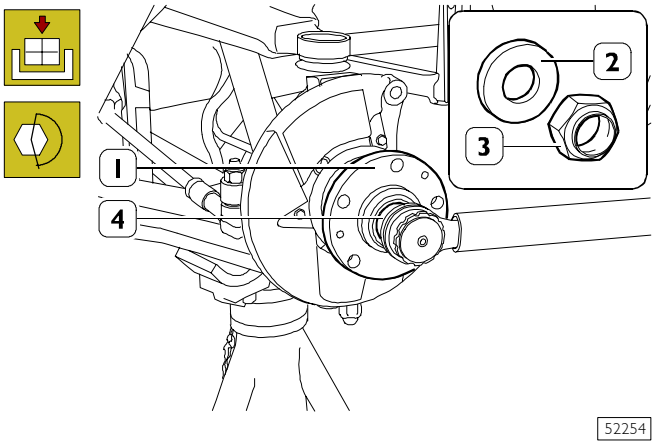

After keying the hub (1), position the washer (2) and screw on the nut (3).

Tighten the nut (3) to the required torque with the Allen wrench (4).

Figure 12

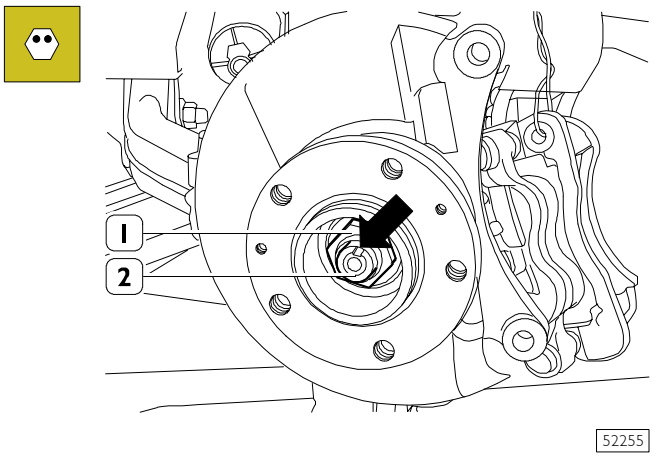

Deform the collar of the nut (1) by the milling (⇒) of the pin (2).

Figure 13

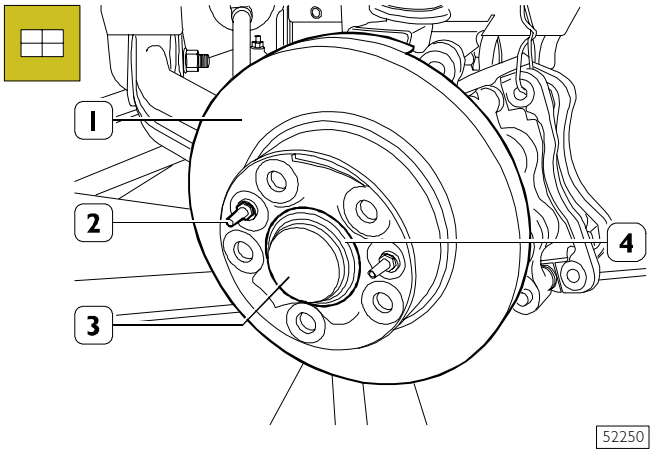

Mount the cup (3) in the wheel hub (4).

Mount the brake disc (1) and secure it to the wheel hub (4) with the two centring pins (2).

Figure 14

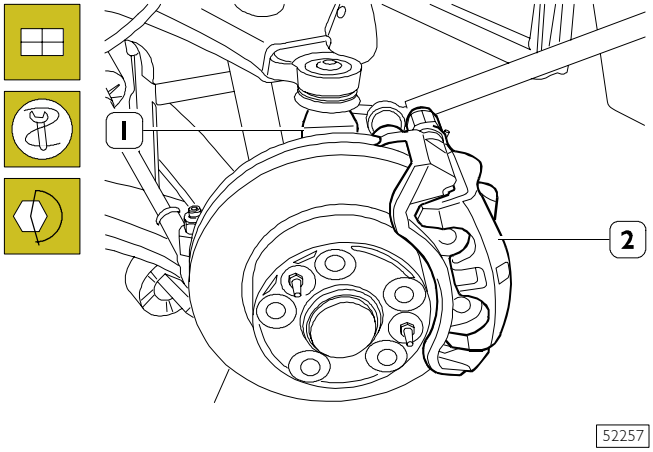

Rest the brake caliper (2) with the brake linings on the stub axle (1).

The brake lining with its wear indicator must be mounted from the piston side of the brake caliper.

If it is necessary to move the brake caliper piston back, use tool 99372236, taking the precautions given in the BRAKES section.

Tighten brake calliper (2) fixing screws to the prescribed torque.

Figure 15

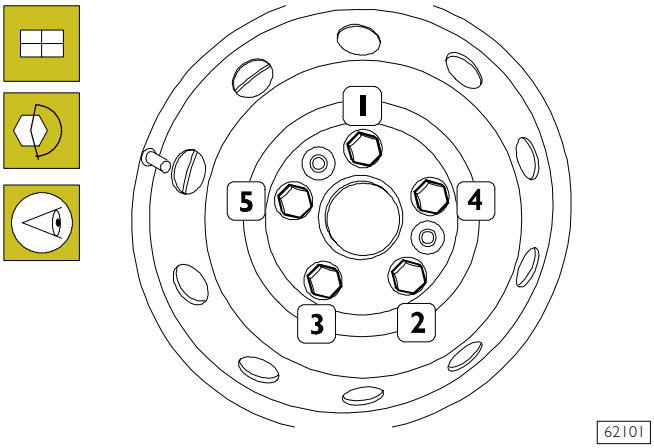

Fit the wheel on the brake plate as shown in the figure and tighten wheel fixing screws to the prescribed torque.

Fit wheel rim cup.

522820 STUB AXLE REMOVAL-REFITTING

Removal

Figure 16

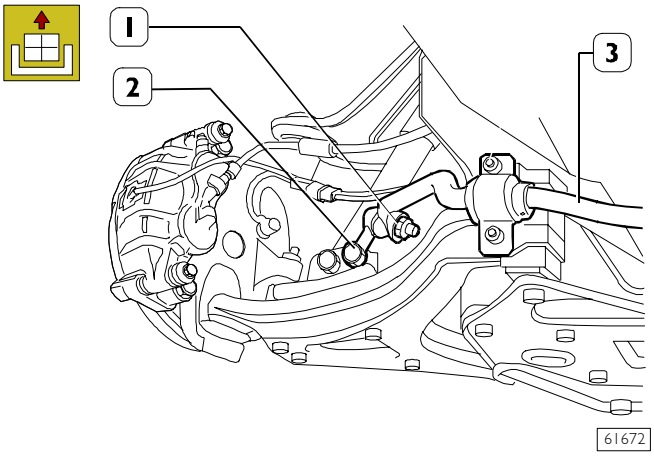

Remove the wheel hubs as described under the relevant heading (operation 520620).

Remove nut (1) and withdraw crankpin (2) from stabiliser bar (3).

Figure 17

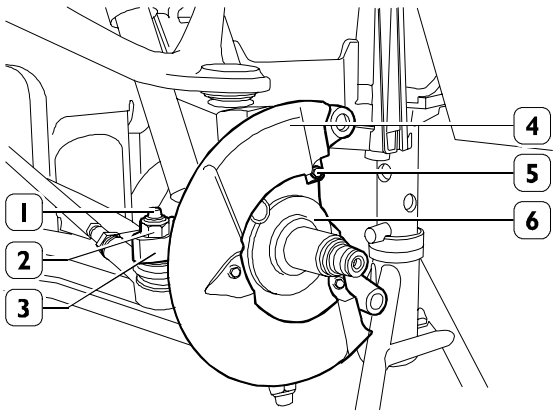

52259

Remove screws (5) and remove protection (4) from stub axle (6).

Remove nut (2) fixing kingpin (1) to lever (3).

Fit the proper setscrew wrench into kingpin (1) to stop its rotation, if required.

Figure 18

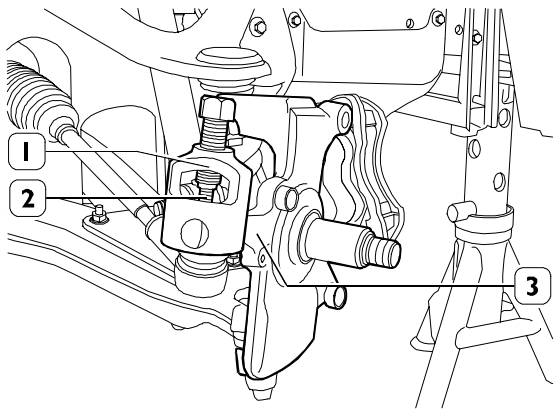

52260

Using the extractor 99347074 (1), remove the pin (2) of the swivel head from the steering lever of the stub axle (3).

Figure 19

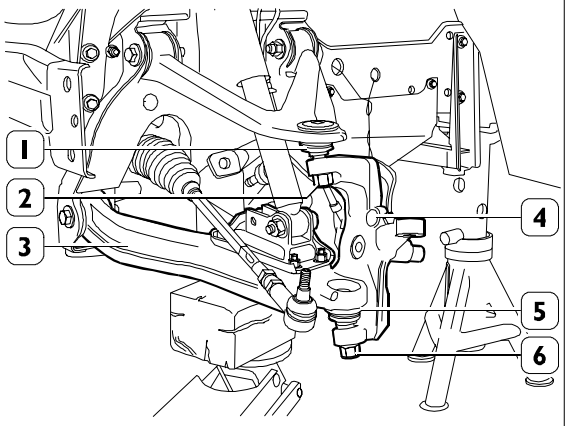

61670

With the hydraulic jack under the bottom suspension arm (3) oppose the action of the transverse leaf spring.

Remove the nuts (2 - 6) securing the swivel head pin (1 - 5) to the stub axle (4).

To block rotation of the swivel head pins (1 - 5), insert a suitable Allen wrench into the hexagon sunk into them.

Figure 20

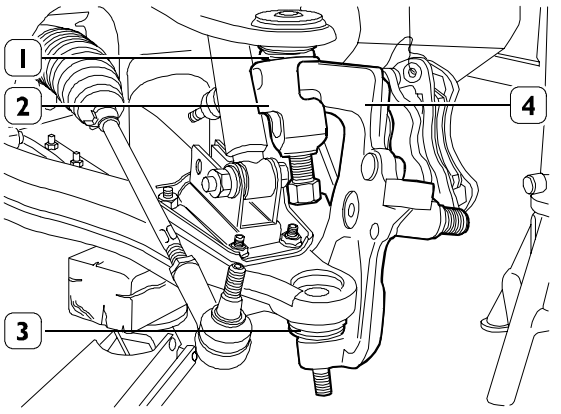

61669

Using the extractor 99347074 (2), remove the link pins (1 - 3) of the stub axle (4) and put this aside.

Refitting

Figure 21

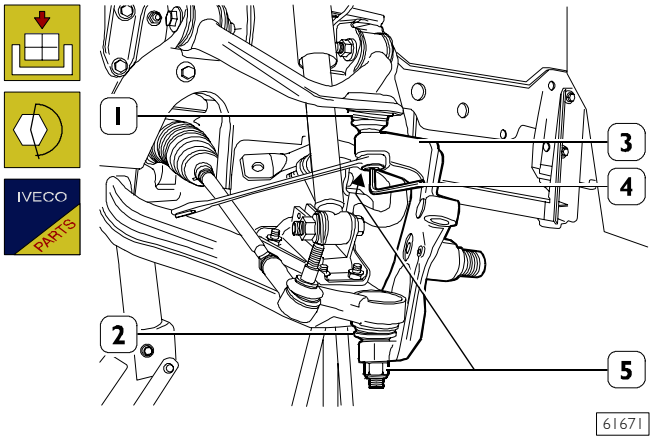

Insert the pins of the swivel heads (1 - 2) of the top and bottom suspension arms into the seats of the stub axle (3). Then screw on the self-locking nuts (5) and lock them at the required torque.

Once removed, self-locking nuts (5) must not be reused.

To block rotation of the swivel head pins (1 - 2), insert a suitable Allen wrench (4) into the hexagon sunk into them.

Figure 22

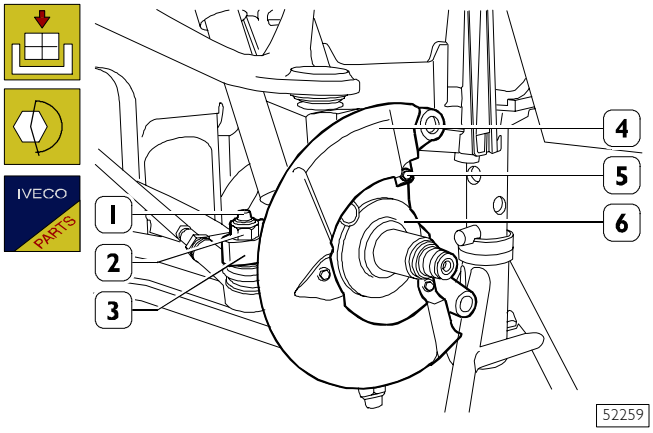

Connect the pin of the swivel head (1) of the power steering tie to the lever (3) of the stub axle (6) and tighten the fixing nut (2) to the required torque.

Once removed, self-locking nuts (2) must not be reused.

To block rotation of the swivel head pin (1), insert a suitable Allen wrench into the hexagon sunk into them.

Mount the guard (4) on the stub axle and secure it, tightening the screws (5) to the required torque.

Refit the wheel hub as described in the relevant chapter (operation 520620).

Figure 23

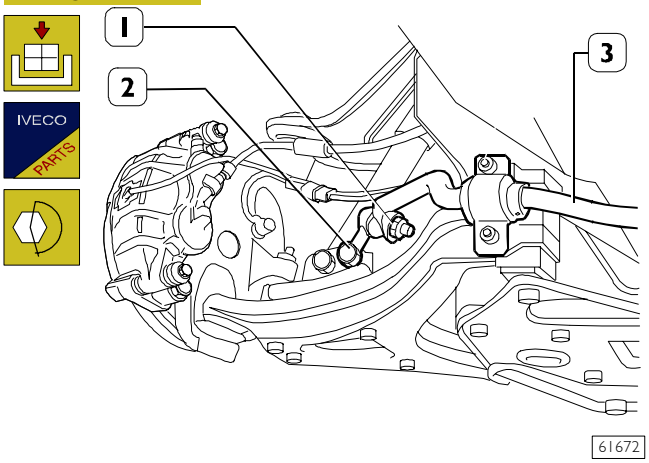

Connect stabiliser bar (3) to crankpin (2), screw new nut (1) and tighten it to the prescribed torque.

Axle 5818

	Page
DESCRIPTION	23
SPECIFICATION AND DATA	23
TIGHTENING TORQUES	24
TOOLS	25
OVERHAULING AXLE 5818	26
❑ Replacing phonic wheel	26
❑ Refitting	27
STUB AXLE REMOVAL AND REFITTING	27

DESCRIPTION

Axle 5818 differs from axle 5817 for wheel hub, brake disc and wheel rim fixing to brake disc that is implemented by nut studs without stabiliser bar.

SPECIFICATION AND DATA

Axle type	5818
WHEEL HUBS	
Wheel hubs bearings	UNIT BEARING
Hub bearings end play	-
Wheel hub bearings play adjustment	Not Adjustable Fixing nut torque tightening
WHEEL GEOMETRY	
Wheel camber angle (vehicle at static load)	0° ± 20'
Wheel caster angle (vehicle at static load)	3° ± 20'
Wheel toe-in (vehicle at static load)	2 ± 1 mm

TIGHTENING TORQUES

Figure 1

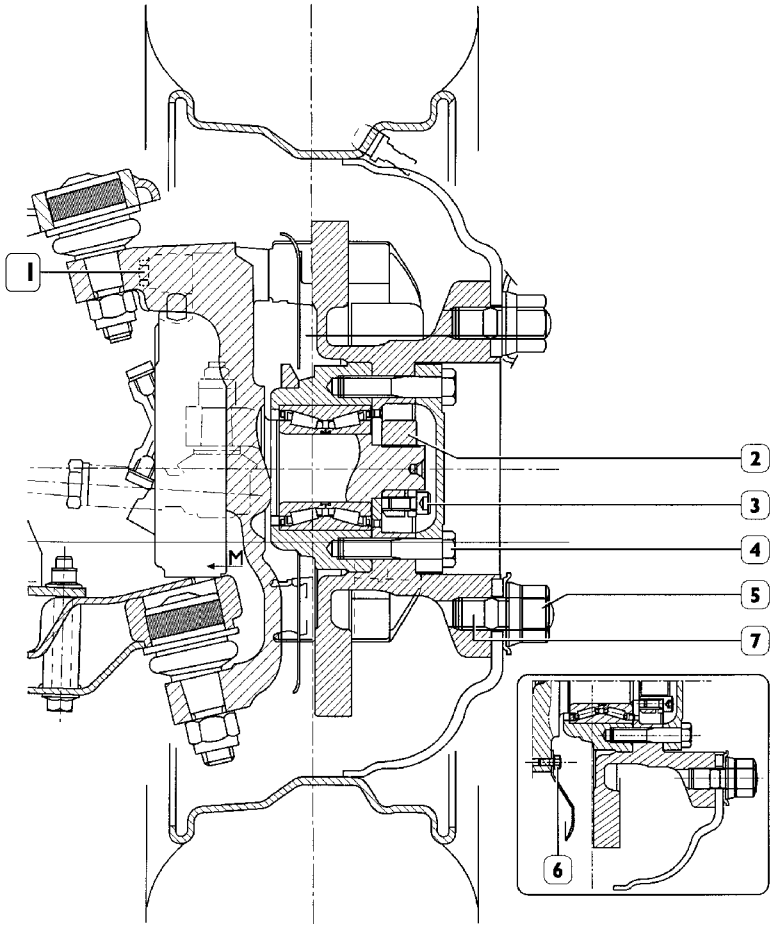

FRONT AXLE 5818

PART		TORQUE	
		Nm	kgm
1	Screw securing caliper mounting to stub axle	170 ÷ 196	17 ÷ 19.6
2	Ring nut securing wheel hub	257 ÷ 314	25.7 ÷ 31.4
3	Screw securing ring nut	20 ÷ 24	2 ÷ 2.4
4	Screw securing cover and brake disc to wheel hub	98.1 ÷ 107.9	9.8 ÷ 10.7
5	Nut securing wheel	284 ÷ 342	28.4 ÷ 34.2
6	Screw securing guard to stub axle	6 ÷ 7.5	0.6 ÷ 0.7
7	Stud fixing to brake disc (apply IVECO 1905683 sealant on the thread)	85 ÷ 104	8.5 ÷ 10.4
—	Screw securing caliper to caliper mounting	154 ÷ 170	15.4 ÷ 17

TOOLS

TOOL NO.		DESCRIPTION
99305354	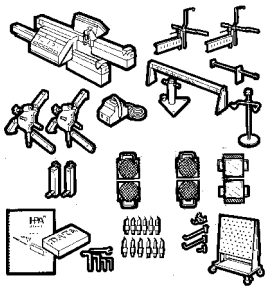	Portable optical reading tool for checking wheel trim
99321024	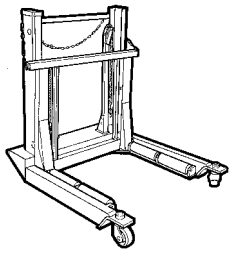	Hydraulic trolley for removing/refitting wheels
99322215	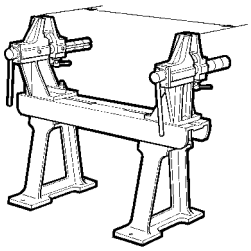	Guide to wheel hub assembly
99347074	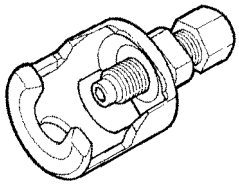	Puller for steering tie rod king-pins
99370496	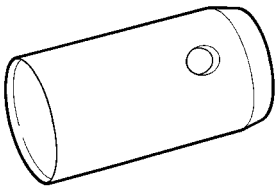	Wheel hub fitting guide

520610 OVERHAULING AXLE 5818

The overhauling operation different from the ones concerning the axle 5817 are described below.

To remove and refit axle 5818, proceed in a similar manner as for axle 5817.

Adjustment values, tightening torque values and equipment are those specified in this chapter.

Figure 2

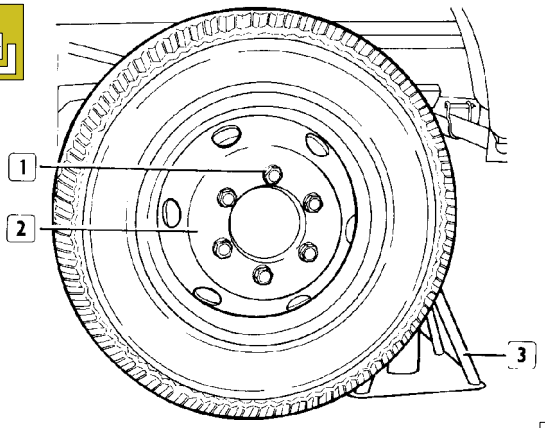

19603

Free the screws (1) securing the wheel rim.

Lift the vehicle and put the stands (3) under the structural members in a forward position.

Unscrew the nuts (1), take off the protection (2) and remove the entire wheel.

Remove the mounting with the brake caliper as described for axle 5817.

Figure 3

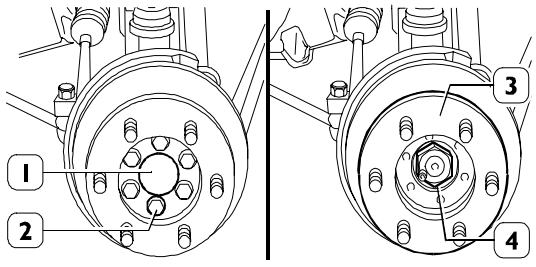

52264

Take out the screws (2), take off the cover (1) and remove the brake disc (3) from the wheel hub (4).

Check the state of the brake disc, wheel pins and linings as described in the BRAKE SYSTEM section.

Figure 4

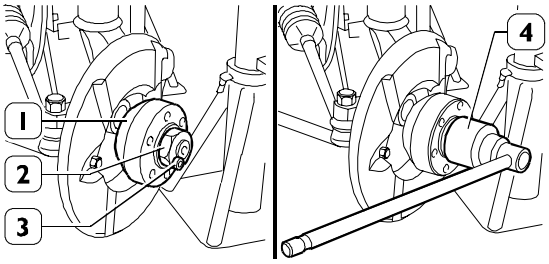

52265

Loosen the screw (3).

With the socket wrench (4), remove the nut (2) securing the wheel hub (1) to the pin of the stub axle.

Extract the wheel hub (1) from the pin of the stub axle.

If any trouble is found with the wheel hub or bearing, the assembly needs to be replaced since the parts are not supplied as single spares.

When putting aside the wheel hub, take care not to damage the phonic wheel.

526712 Replacing phonic wheel

Figure 5

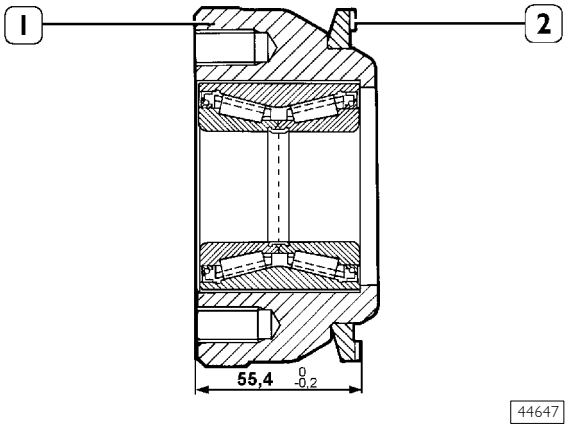

44647

The phonic wheel (2) should be extracted from the wheel hub (1) with general tools.

The phonic wheel should be mounted on the wheel hub after heating it to a temperature of 150°C.

On completing assembly, make sure the "phonic" wheel sits in its seat in the hub properly and is positioned at the distance shown in the figure.

Check the oscillation of the phonic wheel (2). Tolerance must be no greater than 0.1 mm.

Refitting

Figure 6

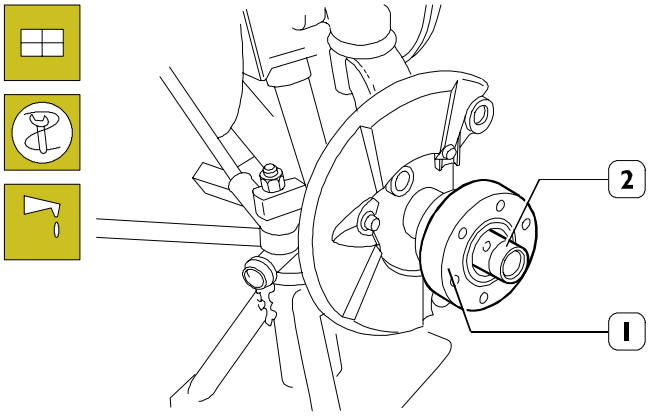

52266

Assemble the tool 99370496 (2) on the stub axle pin, lubricate the external surface of the tool (2) using TUTELA MR3 grease and assemble the wheel hub (1).

Figure 7

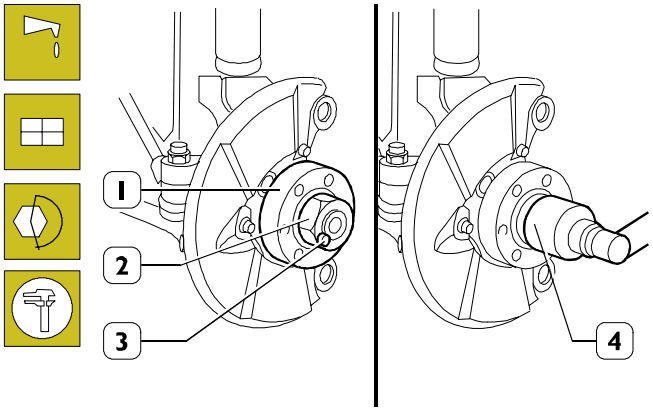

52267

The wheel hub must be keyed without forcing.. If there are difficulties, do not assemble since the bearing may be damaged.
Extract the wheel hub, check the cause of the difficulties and eliminate them.

When the wheel hub has been keyed (1), position the washer, screw the nut (2) and using the socket wrench (4) tighten the nut (2) to the prescribed torque.

Tighten the check screw (3) of the nut to the prescribed torque.

Figure 8

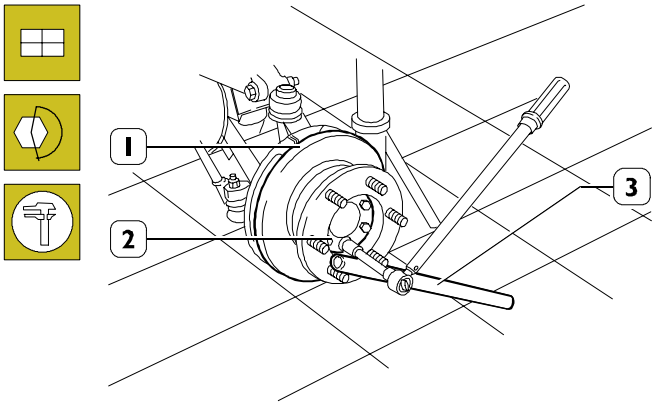

52268

Assemble the brake drum (1) on the wheel hub. Position the cover (2), lock the wheel hub rotation with the lever (3) and tighten the fixing screws to the prescribed torque.

Using a magnetic dial gauge, check the eccentricity of the brake disc: it must not exceed 0.125 mm.

Refit the mounting with the brake caliper to the stub axle, tightening the fixing screws to the required torque.

Figure 9

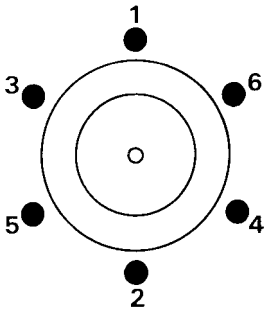

Assemble:

- ❑ the wheel on the brake drum;
- ❑ the nut protection and screw the fixing nuts.

Tighten the nuts fixing the wheel to the prescribed torque according to the diagram shown in figure.

522820 STUB AXLE REMOVAL AND REFITTING

Perform stub axle removal and refitting as described for axle 5817, without considering the points concerning the stabiliser bar since the latter is lacking on axle 5818.

Axle 5819

Page

DESCRIPTION 31

SPECIFICATION AND DATA 32

TIGHTENING TORQUES 33

TOOLS 34

REPAIR OPERATIONS 35

AXLE 5819 OVERHAUL 35

❑ Stub axle removal and refitting 35

❑ Removal 35

❑ Refitting 35

DESCRIPTION

The front axle 5819 has independent wheels.

It is basically composed of:

- ❑ stub axles;
- ❑ wheel hubs;
- ❑ suspension arms.

The stub axles are also the end elements of the suspension.

They are connected to the top and bottom suspension arms by swivel heads that allow turning the stub axle.

The brake calipers and steering levers are secured on the king-pin of the stub axles.

The hubs are supported on the stub axle pins by Unit-Bearings, which need no adjustment or lubrication.

Figure 1

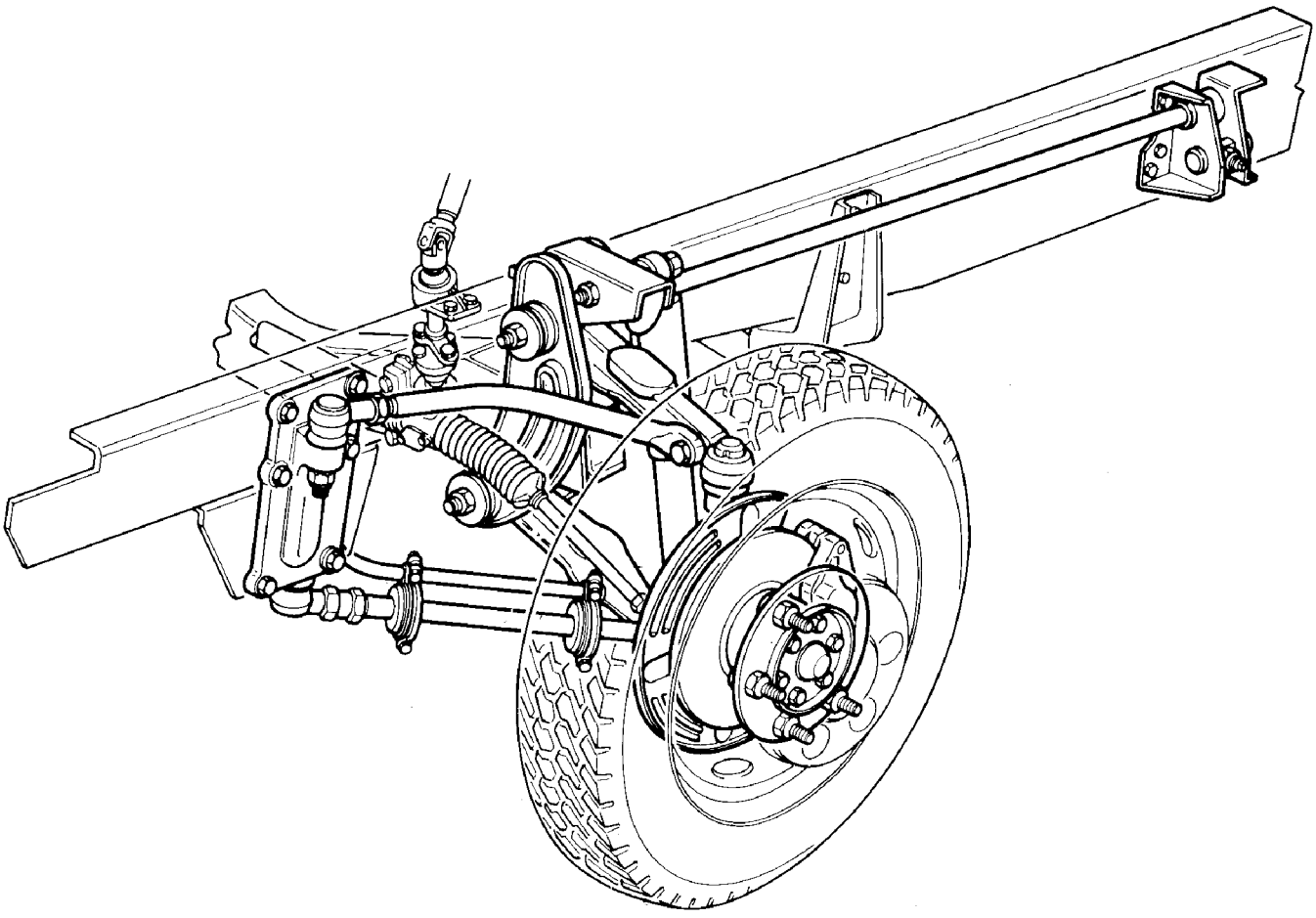

30772

SPECIFICATION AND DATA

Axle type	5819
WHEEL HUBS	
Wheel hubs bearings	UNIT BEARING
Hub bearings end play	-
Wheel hub bearings play adjustment	Not Adjustable Fixing nut torque tightening
WHEEL GEOMETRY	
Wheel camber angle (vehicle at static load)	0° 30' ± 20'
Wheel caster angle (vehicle at static load)	1° 35' ± 20'
Wheel toe-in (vehicle at static load)	2.5 ± 1

TIGHTENING TORQUES

Figure 2

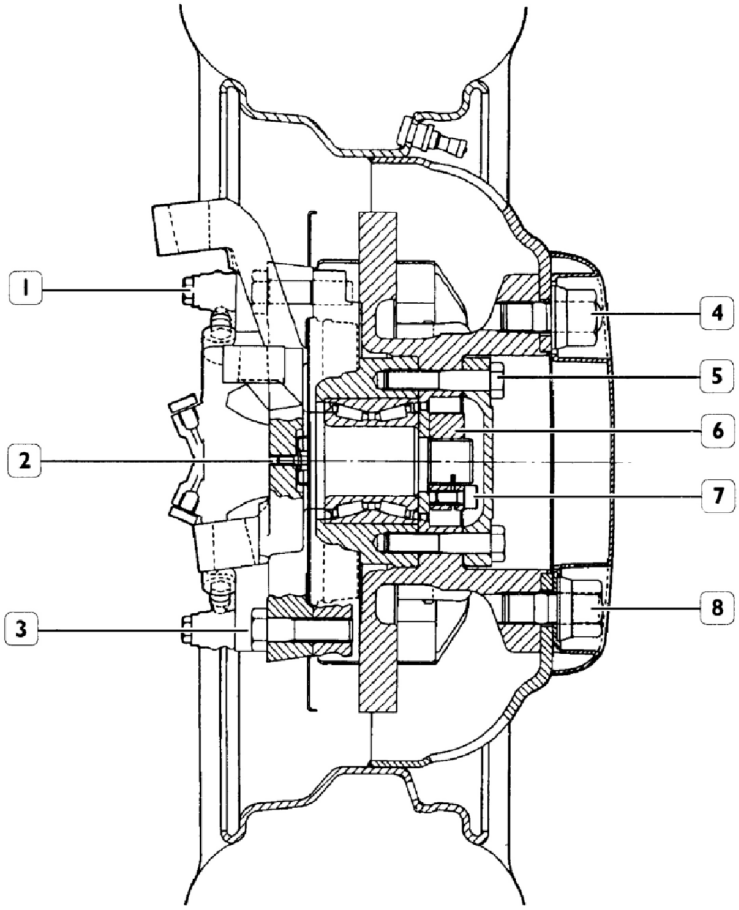

52256

FRONT AXLE 5819

PART		TORQUE	
		Nm	kgm
1	Screw securing caliper to caliper mounting	154 ÷ 170	15.4 ÷ 17
2	Screw securing guards to stub axle	15 ÷ 22	1.5 ÷ 2.2
3	Screw securing caliper mounting to stub axle	154 ÷ 170	15.4 ÷ 17
4	Stud fixing to brake disc (apply IVECO 1905683 sealant on the thread)	85 ÷ 104	8.5 ÷ 10.4
5	Screw securing plate and brake disc to wheel hub	94 ÷ 115	9.4 ÷ 11.5
6	Ring nut securing wheel hub	257 ÷ 314	25.7 ÷ 31.4
7	Screw securing ring nut	20 ÷ 24	2 ÷ 2.4
8	Nut securing wheel	284.5 ÷ 343.3	28.4 ÷ 34.3

TOOLS

TOOL NO.		DESCRIPTION
99305354	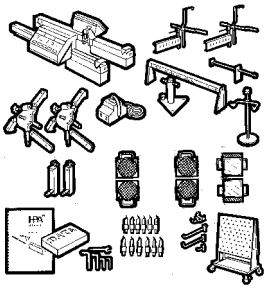	Portable optical reading tool for checking wheel trim
99321024	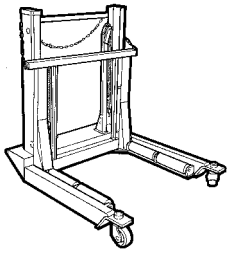	Hydraulic trolley for removing/refitting wheels
99322215	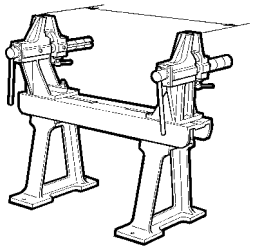	Driving and steering axle overhaul stand
99347074	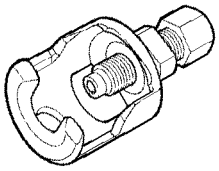	Tool for extracting steering tie rod king-pins
99370496	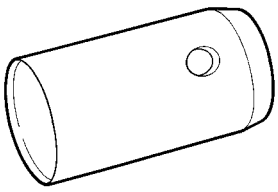	Tool for wheel hub assembly

REPAIR OPERATIONS

520610 AXLE 5819 OVERHAUL

The following paragraphs describe the overhaul operations that differ from axle 5818 operations.
To remove and refit axle 5819, proceed in a similar manner as for axle 5823.
Adjustment values, tightening torque values and equipment are those specified in this chapter.

520611 Stub axle removal and refitting

Removal

Figure 3

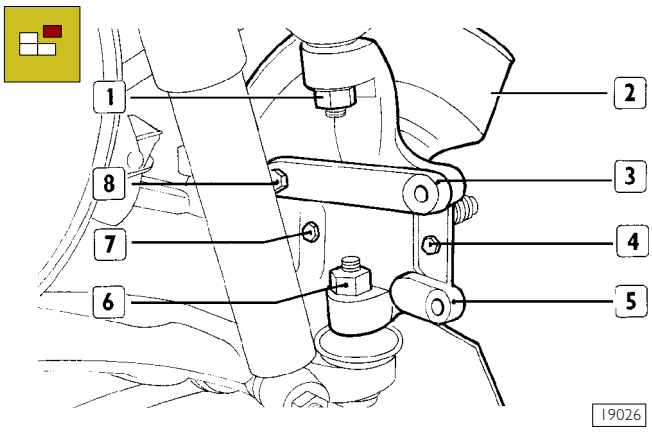

Remove wheel hub as described in the relevant chapter (operation 520620) concerning axle 5817.

Remove from stub axle (5):

- ❑ dust cover (2) by loosening screw (7);
- ❑ steering lever (3) by loosening screw (8);

Loosen kingpin (1 and 6) fixing nuts from stub axle (5).

Figure 4

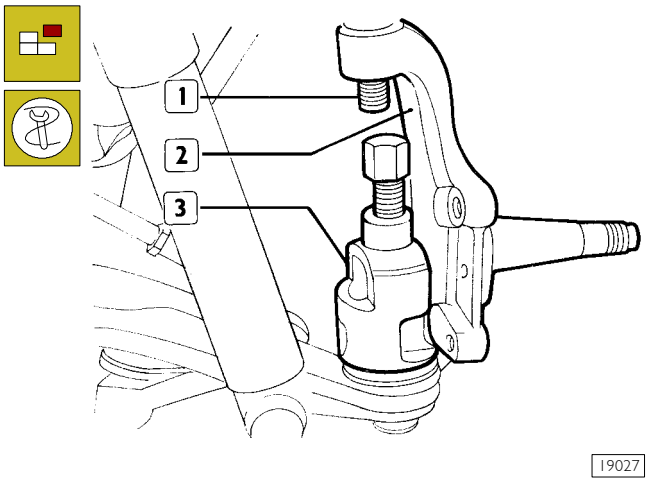

Use tool 99347074 (3) to remove kingpin (1) from stub axle (2) then remove the latter.

Refitting

Figure 5

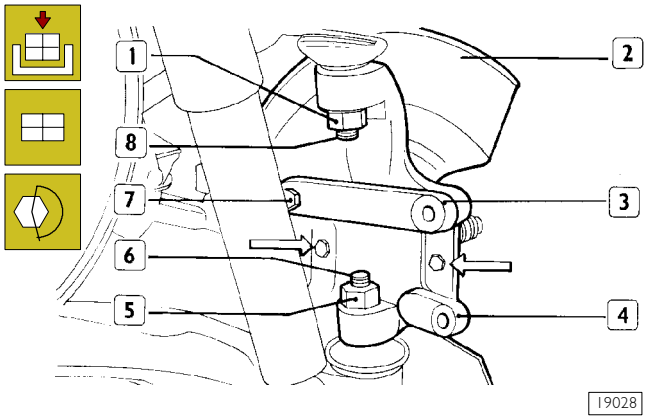

Set upper and lower lever kingpins (6 and 8) into stub axle seat (4) then tighten self-locking nuts (1 and 5) to the prescribed torque.

Refit steering lever (3) on stub axle by tightening the relevant fixing screw and nut (7) to the prescribed torque.

Refit dust cover (2) to stub axle by means of the proper screws indicated with arrows.

Self-locking nuts (1 and 5) cannot be reused after removing.

Refit wheel hub as described in the relevant chapter (operation 520620) concerning axle 5818.

5206 Axle 5823

Page

DESCRIPTION 39

SPECIFICATION AND DATA 40

TIGHTENING TORQUES 41

EQUIPMENT 42

REMOVING AND REFITTING AXLE 5823 43

❑ Removal 43

❑ Refitting 44

AXLE 5823 OVERHAUL 45

❑ Wheel hub removal and refitting 45

❑ Removal 45

❑ Replacing phonic wheel 46

❑ Re-fitting 46

DESCRIPTION

The front axle 5823 has independent wheels.

It is basically composed of:

- stub axles;
- wheel hubs;
- suspension arms.

The stub axles are also the end elements of the suspension.

They are connected to the top and bottom suspension arms by swivel heads that allow turning the stub axle.

The brake calipers and steering levers are secured on the king-pin of the stub axles.

The hubs are supported on the stub axle pins by Unit-Bearings, which need no adjustment or lubrication.

Figure 1

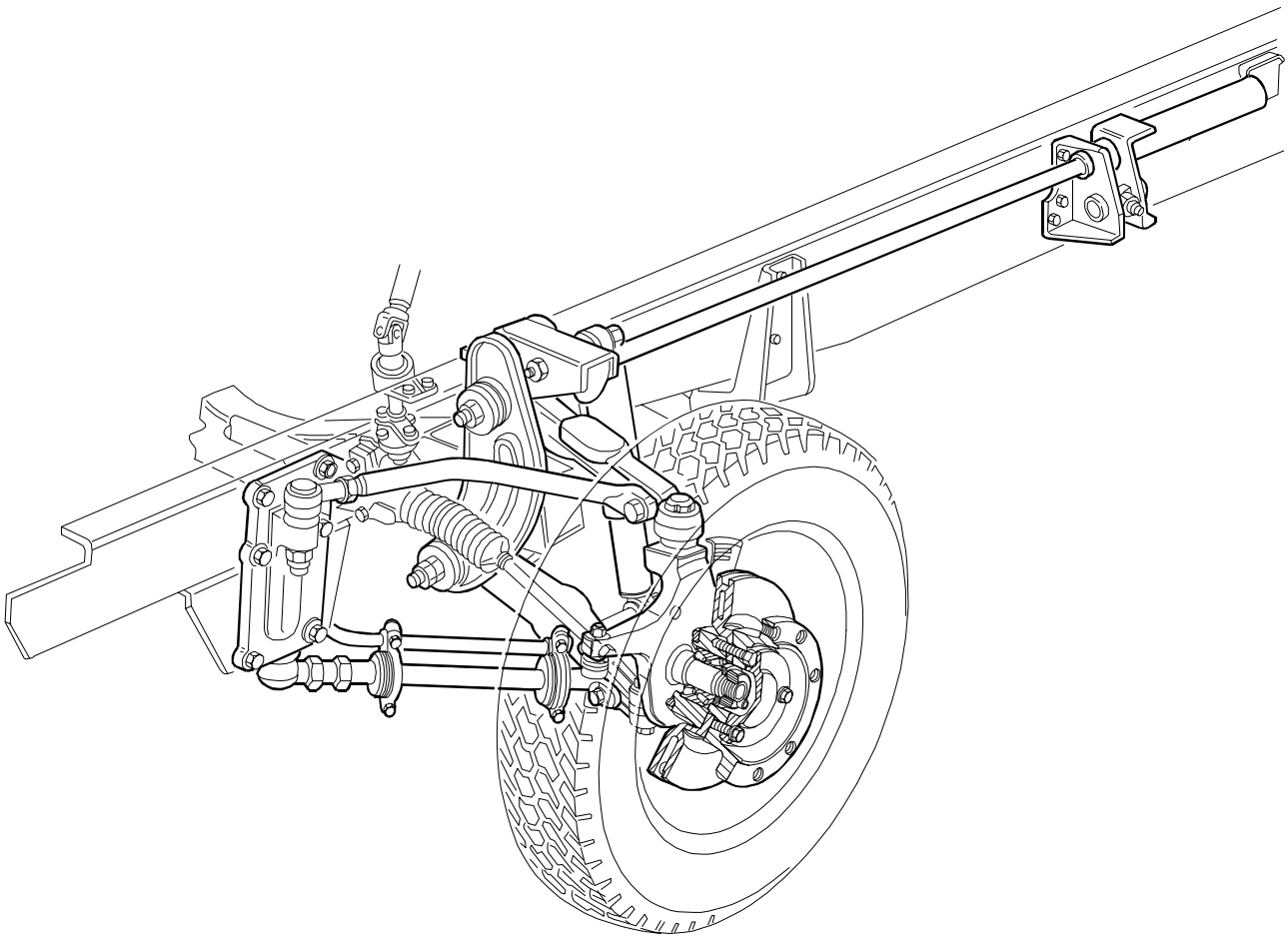

62909

SPECIFICATION AND DATA

Axle type	5823
WHEEL HUBS	
Wheel hubs bearings	UNIT BEARING
Hub bearings end play	0.11 ÷ 0.14
Wheel hub bearings play adjustment	Not Adjustable Fixing nut torque tightening
WHEEL GEOMETRY	
Wheel camber angle (vehicle at static load)	1° ± 20'
Wheel caster angle (vehicle at static load)	2° 30' ± 20'
Wheel toe-in (vehicle at static load)	2.5 ± 1 mm

TIGHTENING TORQUES

Figure 2

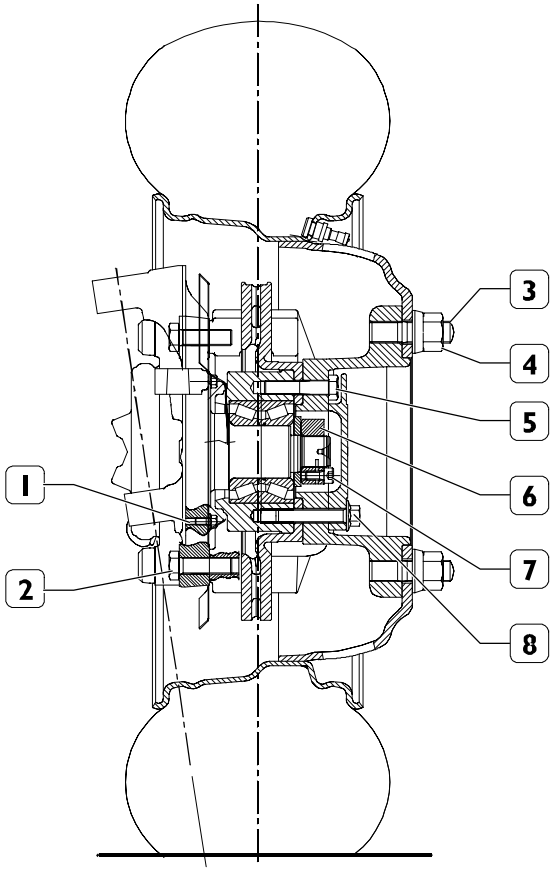

74742

FRONT AXLE 5823

COMPONENT		TORQUE	
		Nm	kgm
1	Screw securing guards to stub axle	176 ÷ 217	17.6 ÷ 21.7
2	Screw securing caliper to stub axle	6 ÷ 7.5	0.6 ÷ 0.7
3	Stud fixing to brake disc (apply LOCTITE 270 sealant on the thread)	52 ÷ 64	5.2 ÷ 6.4
4	Nut securing wheel	284.5 ÷ 343.3	28.4 ÷ 34.3
5	Screw securing brake disc to wheel hub	98 ÷ 108	9.8 ÷ 10.8
6	Ring nut securing wheel hub	363 ÷ 441	36.3 ÷ 44.1
7	Ring nut fastening screw	19.6 ÷ 23.5	1.9 ÷ 2.3
8	Cover fastening screw	98 ÷ 108	9.8 ÷ 10.8

EQUIPMENT

TOOL No.		DESCRIPTION
99305354	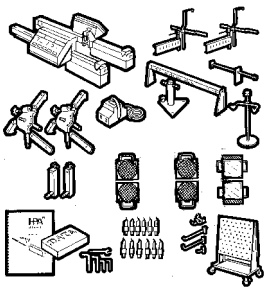	Portable optical reading tool for checking wheel trim
99321024	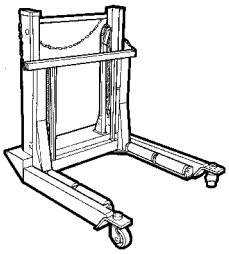	Hydraulic truck for removing - refitting operations
99322215	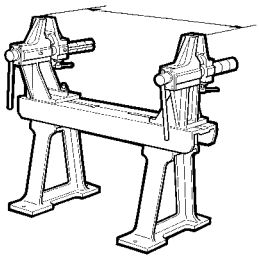	Stand to overhaul axles
99347074	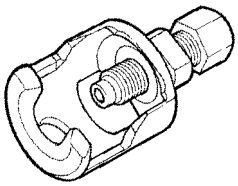	Tool to remove drag link joints and wishbones
99370713	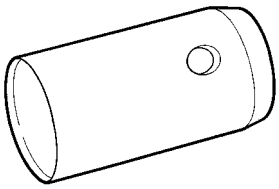	Guide to wheel hub assembly

REMOVING AND REFITTING AXLE 5823

Removal

Figure 3

Set the vehicle on solid, level ground.

Lock the rear wheels with scotches, remove the wheel rim guards and loosen the screws or nuts fixing the wheel.

Lift the front of the vehicle and rest the chassis frame on supports.

Take out the screws or nuts fixing the wheel and remove them with tool 99321024.

Remove the front right and left mudguard (1).

Remove the right and left mudguards under the bumpers (17).

To help remove the front suspension mounting (2), free the top screw stay (14) in correspondence with the screw (15) fixing to the suspension arm (13).

Remove the front suspension mounting (2) by taking out the chassis frame fasteners (16).

Fit the top screw stay (14) back onto the suspension arm (13).

The same steps must be performed on both left and right.

Adjust the load on the right and left torsion bars (9).

Undo the nut (11) and unscrew the threaded pin (12) until the torsion bar (9) is entirely "discharged".

Remove the fasteners (10) fixing the mounting (8) to the chassis frame.

Extract the mounting (8) from the torsion bar (9).

If it is decided to leave the brake callipers on the axle, proceed to:

- ❑ disconnect the electrical connection (3) signalling brake lining wear and the ABS sensor (5) if there is one;
- ❑ disconnect the brake fluid pipes in correspondence with the fittings (7) after draining the system;
- ❑ if it is decided to leave the brake callipers on the vehicle, proceed to:
- ❑ disconnect the brake callipers (4) from their respective stub axles by taking out the screws (6) and supporting the callipers to prevent any strain on the pipes.

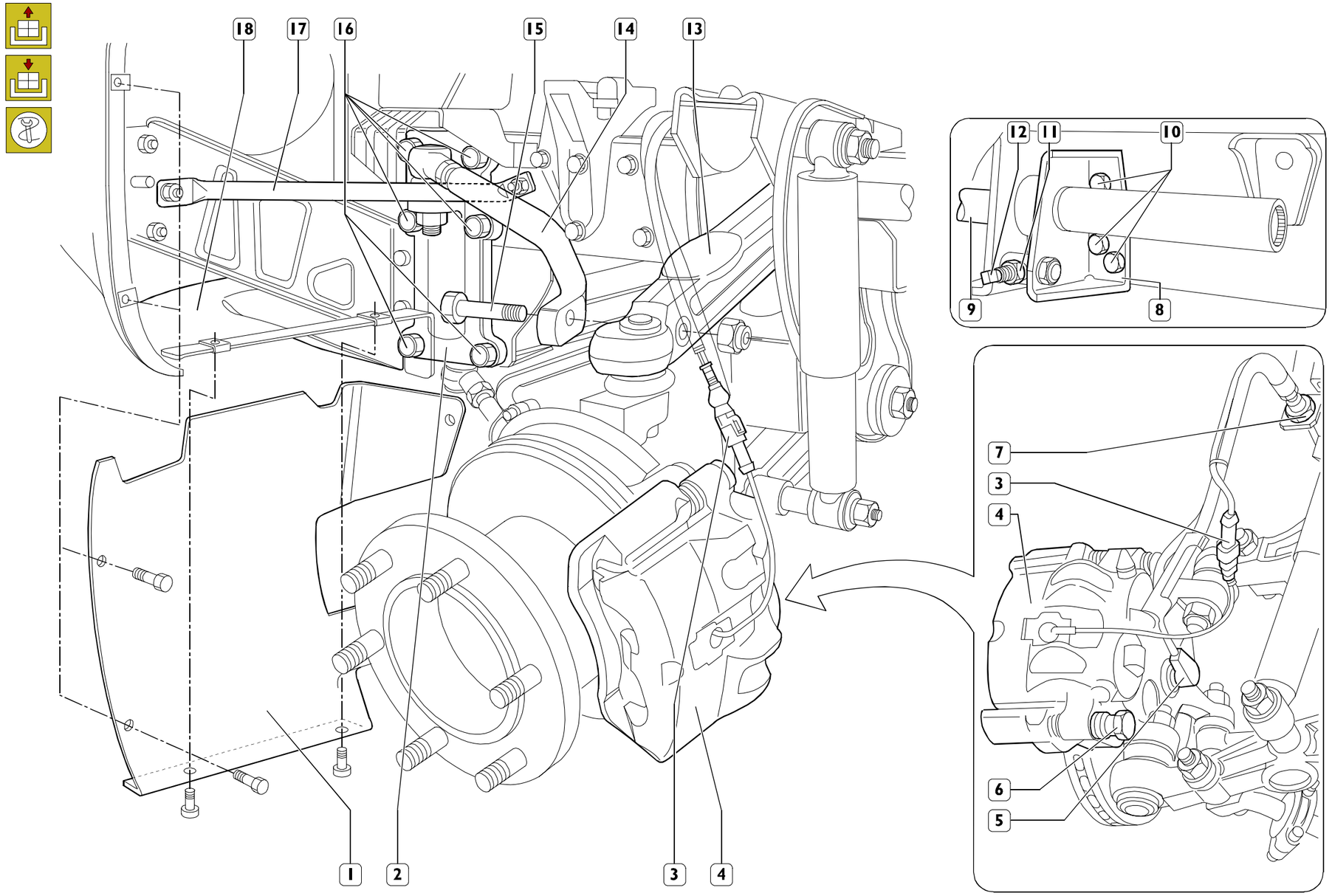

75581

From underneath the vehicle:

- ❑ remove the central guard (7) under the engine by taking out the screws securing it to the side guards (8) and to the front cross member of the chassis frame;
- ❑ remove the right and left side guards (8) of the engine by taking out the screws securing them to the chassis frame;
- ❑ remove the right and left side guards (9) of the gearbox by taking out the screws securing them to the axle (11) and to the cross member (12) under the gearbox;
- ❑ disconnect the brake fluid pipe (10) from the retaining blocks on the axle;
- ❑ drain off the power-steering fluid and disconnect the pipes (4) and (5);
- ❑ disconnect the power steering column (3) in correspondence with the coupling (6);
- ❑ place the removal bracket on the hydraulic jack and put it all under the axle;
- ❑ undo the chassis frame bottom fixing screws (2) and the top fixing nuts (1);
- ❑ lower the hydraulic jack and extract the axle (11).

Refitting

Reverse the steps described for removal tightening the screws or nuts to the prescribed torque.

Adjust the load of the torsion bar as illustrated under the specific heading.

Top up the power-steering fluid.

If the brake callipers have been left on the axle, restore the brake fluid level and bleed off any air.

Check and adjust the front wheel geometry.

Figure 4

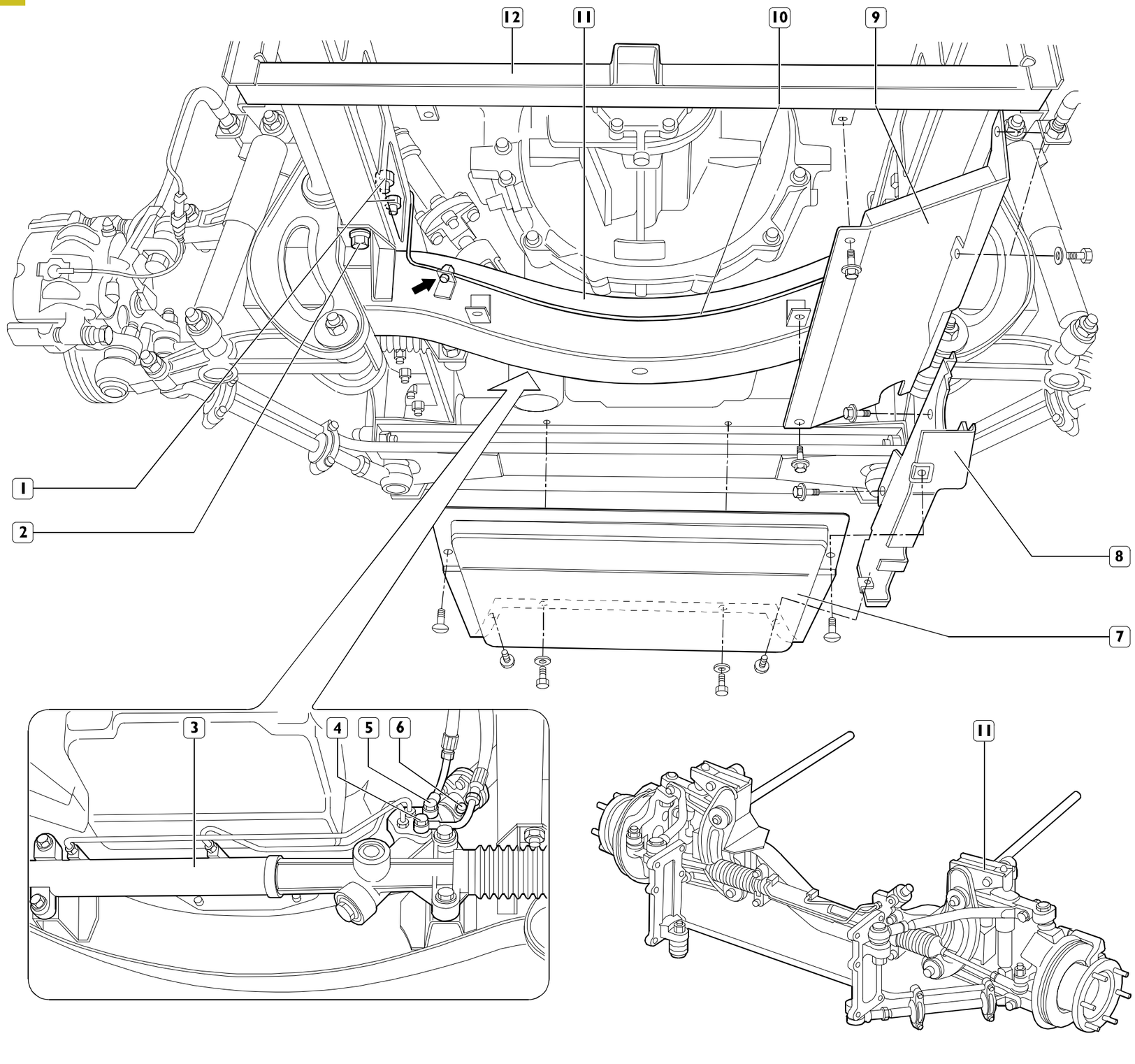

520610 AXLE 5823 OVERHAUL

Overhaul operations described in this sections are those differing from axle 5817.

Figure 5

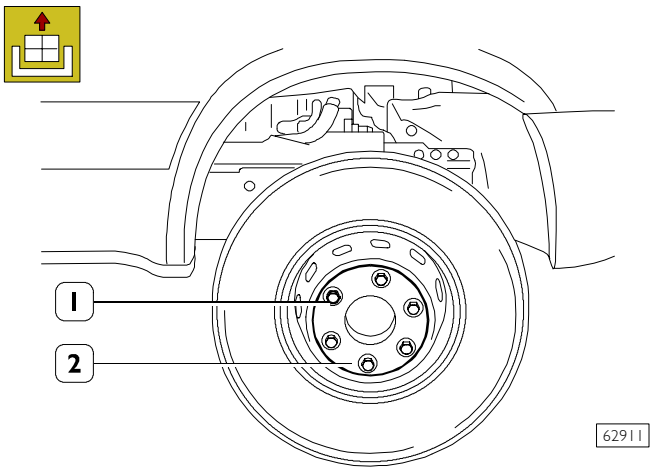

Loosen wheel rim fastening nuts (1).

Lift the vehicle and set the supporting stands under the side members in forward position.

Loosen nuts (1), remove protection (2) and remove the entire wheel.

520620 Wheel hub removal and refitting

Removal

Figure 6

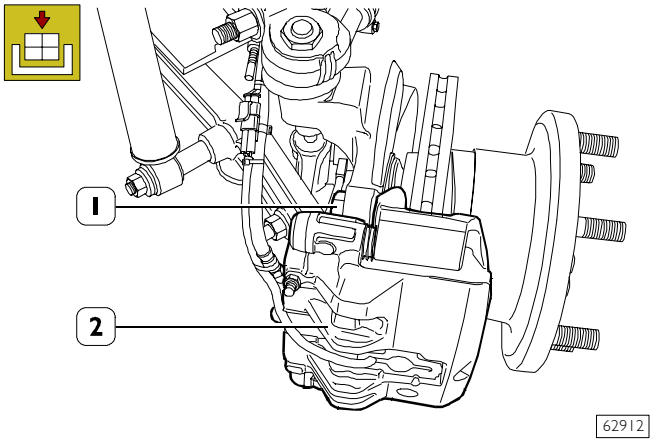

Remove the screws (1) and remove the support including the brake calliper (2) from the stub axle.

Suitably support the brake calliper to prevent oil pipe tensioning.

Figure 7

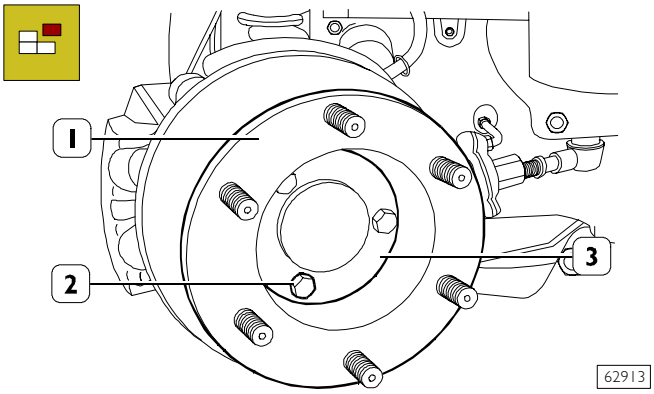

Stop wheel hub (1) rotation.

Remove the screws (2) and remove the cover (3).

Figure 8

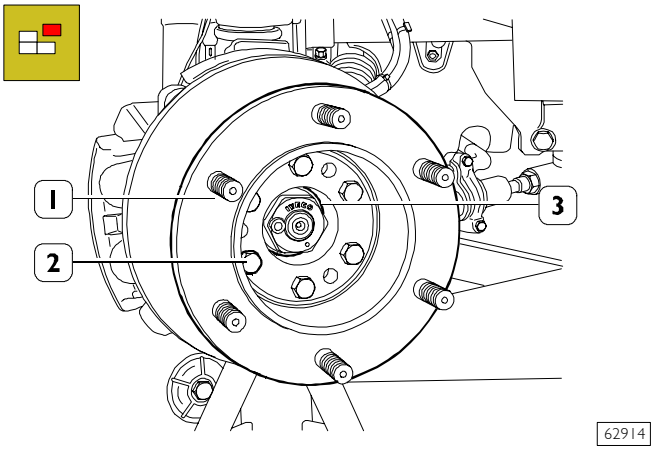

Remove the screws (2) and remove wheel hub (1) from hub (3).

Figure 9

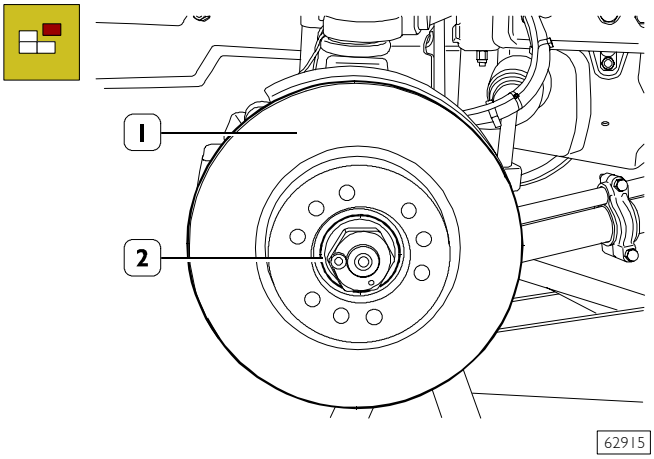

Remove the brake disc (1) from the wheel hub (2).

Check brake disc and lining conditions as described in the BRAKE SYSTEM section.

Figure 10

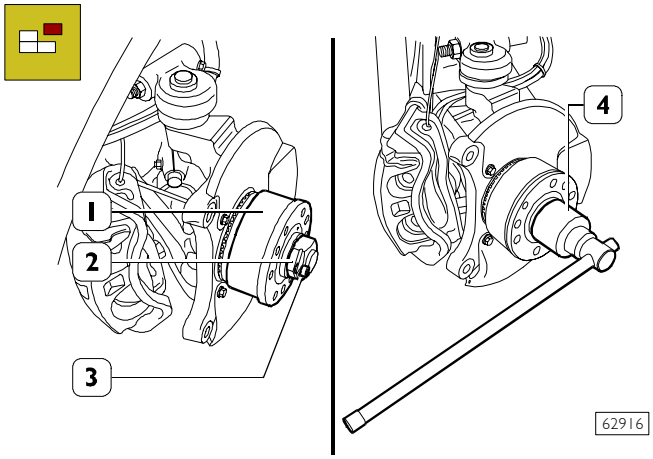

Loosen the screw (3).

With the socket wrench (4), remove the nut (2) securing the wheel hub (1) to the pin of the stub axle.

Extract the wheel hub (1) from the pin of the stub axle.

If any trouble is found with the wheel hub or bearing, the assembly needs to be replaced since the parts are not supplied as single spares.

When repairing the wheel hub (1), take care not to damage the phonic wheel (3).

526712□ Replacing phonic wheel

Figure 11

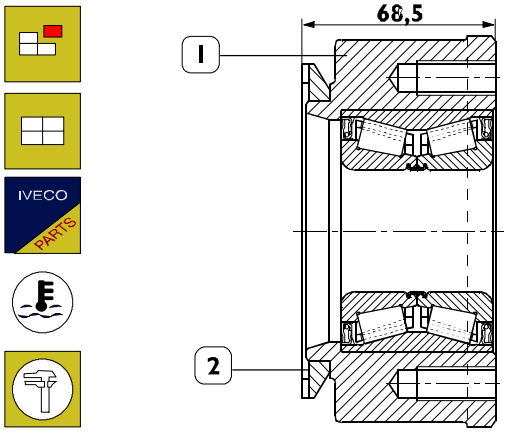

The possible extraction of the phonic wheel (2) from the wheel hub (1) is made using normal tools.

The phonic wheel must be heated up to a temperature of 150°C before the assembly on the wheel hub.

When the assembly is ended, make sure that the "phonic" wheel perfectly rests on the hub housing and that is positioned at the dimension shown in figure.

Check that the orthogonality and oscillation of the phonic (2) wheel is no greater than 0.1 mm.

Re-fitting

Figure 12

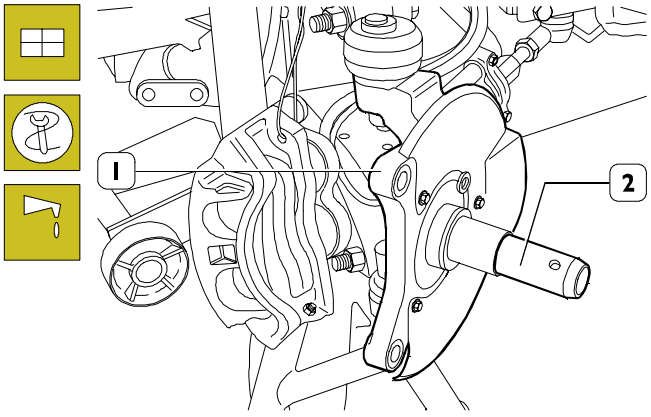

Screw tool 99370496 (2) on kingpin (1), grease tool external surface (2) with Tutela MR3.

Figure 13

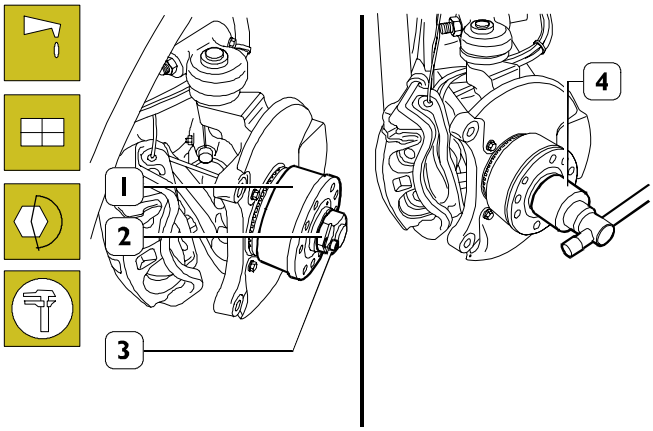

Refit the wheel hub (1).

The wheel hub must be keyed without forcing.. If there are difficulties, do not assemble since the bearing may be damaged.
Extract the wheel hub, check the cause of the difficulties and eliminate them.

When the wheel hub has been keyed (1), position the washer, screw the nut (2) and using the socket wrench (4) tighten the nut (2) to the prescribed torque.
Tighten the check screw (3) of the nut to the prescribed torque.

Figure 14

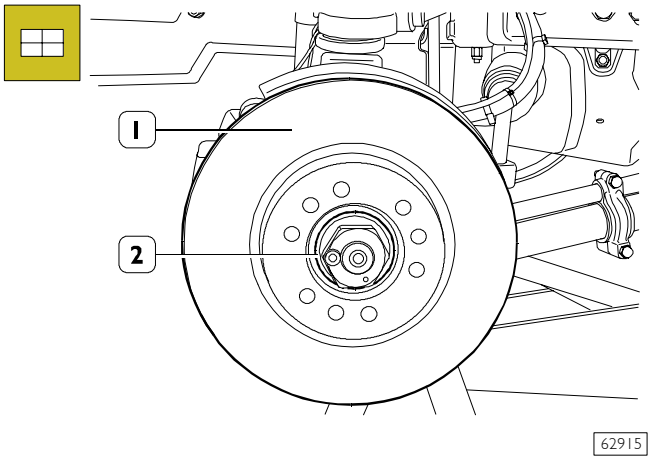

Fit brake disc (1) on wheel hub (2).

Figure 15

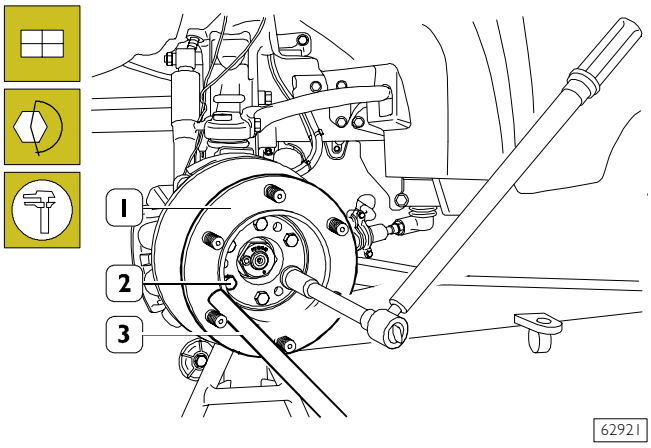

Fit flange (1) on wheel hub. Stop wheel hub rotation using the proper lever (3) and tighten the fastening screws (2) to the specified torque.

Use the gauge with magnetic base to check brake disc mismatching: it must be lower than 0.125 mm.

Wheel stud replacement

Replace wheel studs if found damaged by removing them from the wheel hub.

Smear new stud threads with Loctite 270 and tighten to the specified torque.

Once refitting is over, check stud squareness, max. error is

0.2 mm.

Figure 16

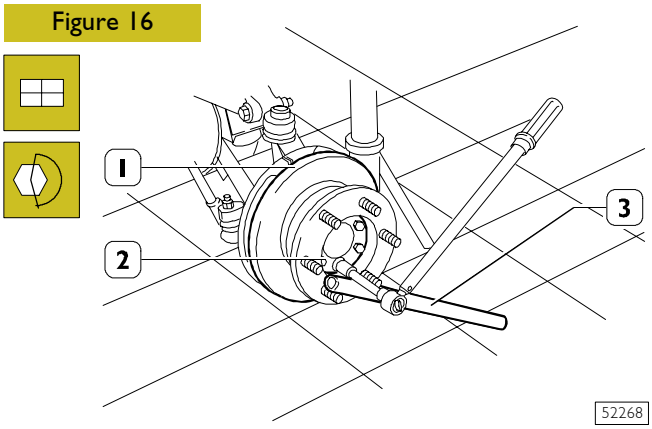

Refit cover (1).
Stop wheel hub rotation using the proper lever (3) and tighten the fastening screws (1) to the specified torque.

Figure 17

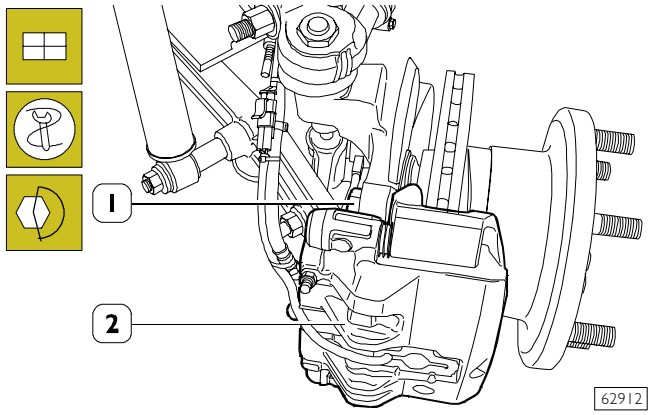

Rest brake calliper (2) and brake linings on stub axle (1).

The brake lining with the wear sensor shall be fitted on brake calliper piston side.

Comply with BRAKE section requirements to move back the brake calliper piston using tool 99372236.

Tighten brake calliper (2) fastening screws (1) to the specified torque.

Figure 18

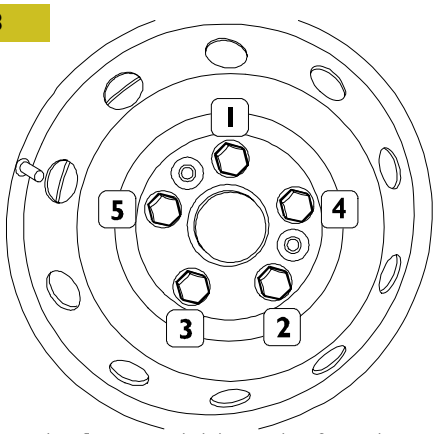

Fit the wheel on the flange and tighten the fastening screws to the specified torque according to the sequence shown in the figure.

Refit wheel rim cap.

Wheel geometry

	Page
DESCRIPTION	51
WHEEL GEOMETRY	53
SPECIFICATIONS AND DATA	53
TIGHTENING TORQUES	53
TOOLS	54
CHECKING CHARACTERISTIC ANGLES	55
❑ Positioning jaws and projectors	55
❑ Electronic balancing of rim eccentricity	56
❑ Wheel alignment	56
❑ Checking toe-in	57
❑ Front wheel deviation test (vehicle wheelbase check)	57
❑ Checking camber	58
❑ Checking king-pin angle and caster angle	58
❑ Checking steering angles	59
❑ Checking and adjusting toe-in with gauge 99305108	59
❑ Checking rear axle alignment	60
❑ Calculating thickness of spacers to be fitted between tie rod mountings and chassis side members (with the exception of vehicles equipped with 5-mm thick chassis or with transverse leaf-spring suspension)	60

DESCRIPTION

In order to have a good vehicle ground holding, a low consumption of tyre and to enable the driving wheels to return to straight running after steering, the front wheels are adjusted at defined assembly angles:

- wheel camber angle;
- king-pin camber angle;
- caster angle;
- wheel toe-in.

These angles, accurately calculated, enable the correct balancing of the forces created when the vehicle is moving, in the different load conditions, tending to change the position of the wheels on the ground.

Wheel camber angle

Figure 1

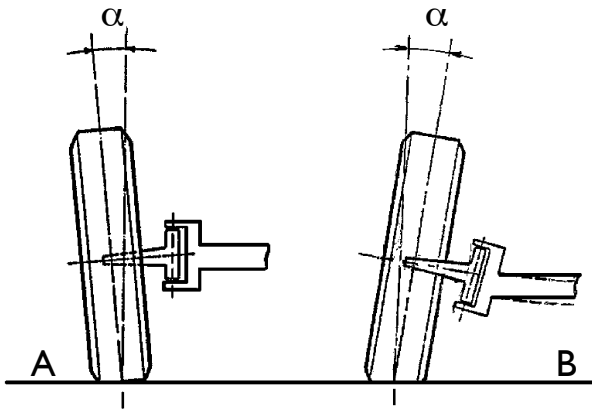

32956

The camber angle (α) is the angle formed by the axis passing through the wheel centre line and the vertical to the ground, looking at the vehicle from the front.

The camber angle is positive (A) when the upper part of the wheel tends toward the outside; it is negative (B) when the wheel upper part tend toward the inside.

Camber angle

Figure 2

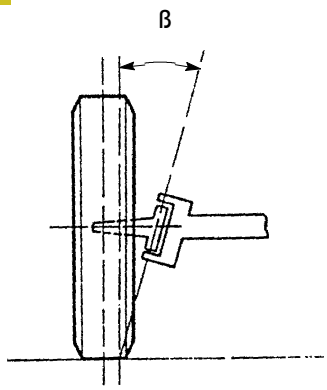

32957

The king-pin camber angle (β) is the angle formed by the axis passing through the king-pin and the vertical to the ground, looking at the vehicle from the front.

When the projection of the king-pin axis is near to the contact point of the wheel with the ground (opposite tendency to the wheel camber) the angle is positive, it is difficult to say that it is impossible to have the king-pin camber angle negative.

The wheel camber angle (α) and the king-pin camber angle (β) enable wheel axis and the king-pin axis to come nearer as much as possible to the contact centre of the tyre on the ground.

In this way, reduced tyre wear and lower steering torque are obtained.

Caster angle

Figure 3

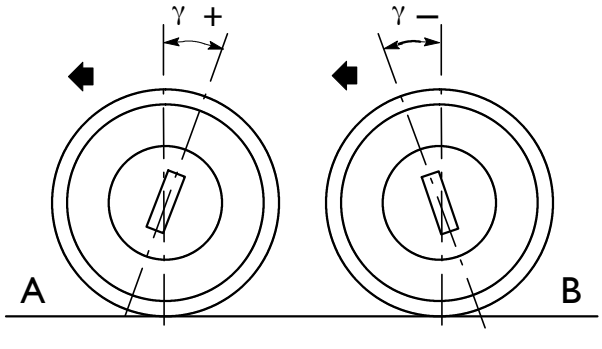

32958

The caster angle (γ) is the angle formed by the king-pin axis with the vertical to the ground, looking at the vehicle from one side.

If the projection formed by the king-pin axis falls in front of the wheel contact point with the ground, in the direction of travel of the vehicle, the caster angle is by convention positive (A); it is negative (B) if it falls behind the wheel contact point with the ground; it is equal to zero if it is perfectly vertical to the contact point.

This angle makes it possible to keep the front wheels straight when the vehicle is running straight and allows the wheels to return spontaneously to running straight from the position taken in the bend, as soon as the steering wheel is released by the driver.

Wheel toe-in

Figure 4

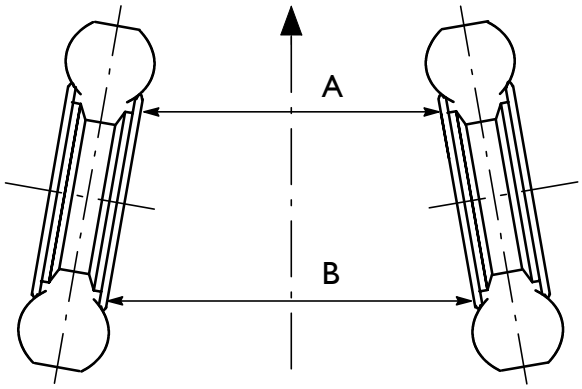

The wheel toe-in results from the difference between the distances A and B (value expressed in mm) measured on the horizontal axis of the rims, looking at the vehicle from the top. In this way a light drive and a low tyre consumption is obtained.

The toe-in is positive if B is higher than A.

Figure 5

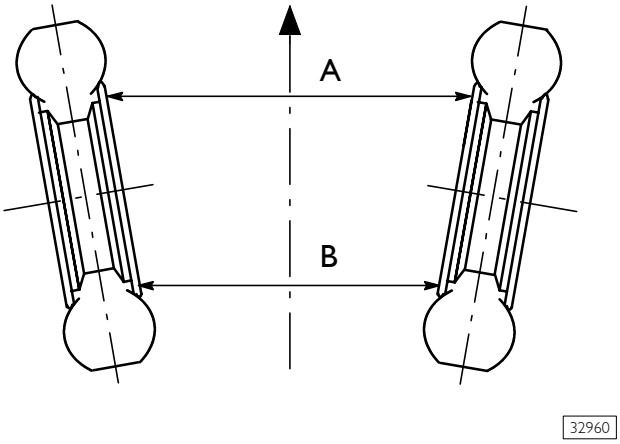

The toe-in is negative if B is lower than A.

Figure 6

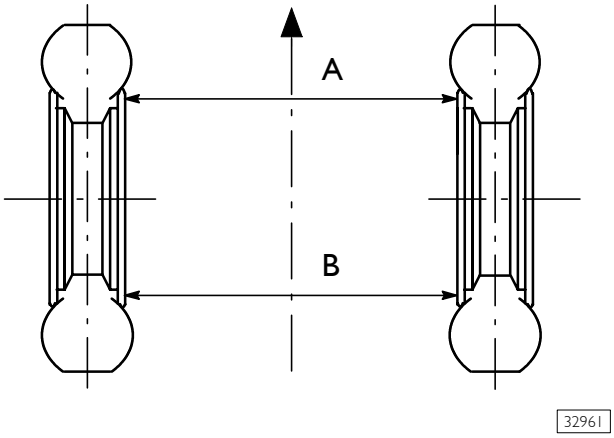

The toe-in is equal to zero if B is equal to A.

WHEEL GEOMETRY SPECIFICATIONS AND DATA

	MODELS			
	29L - 35S	**35 (1)**	**35 (2).40 - 45. - 50.**	**360C - 65C**
WHEEL GEOMETRY	-	-	-	-
Wheel camber angle (vehicle at static load) (± 20')	0° ± 20'		0° 30' ± 20'	1° ± 20'
Wheel caster angle (vehicle at static load)	3° ± 20'		1° 35' ± 20'	2° 30' ± 20'
Wheel toe-in (vehicle at static load) mm	2 ± 1		2.5 ± 1	
Steering angle:				
Internal a	47° 30' ± 30'		43°	37° 7'
External b	39° ± 30'		36° 30'	45° 6'
Stub axle king-pin camber α	13.38°		7°	

(1) Front suspension with transverse leaf spring

(2) Front suspension with torsion bar

TIGHTENING TORQUES

PART	TORQUE	
	Nm	kgm
Nut fixing king-pin to the side tie rod of the steering box	15 ÷ 20	1.5 ÷ 2

TOOLS

TOOL NO.		DESCRIPTION
99305108		Wheel toe in checking gauge
99305354	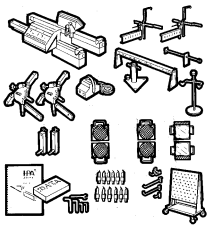	Tool for checking wheel geometry
99347074	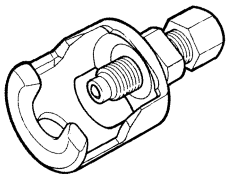	Puller for king-pins

CHECKING CHARACTERISTIC ANGLES

Before proceeding with the checks, it is necessary to perform a preliminary inspection at some of the vehicle members, which can affect the geometry: if malfunctions are found, it is necessary to eliminate them in order to avoid wrong detection.

The check to be performed are the following:

- ❑ tyre pressure;
- ❑ wheel hub bearing play
- ❑ play between steering tie rod pins and stub axle levers;
- ❑ shock absorber efficiency;
- ❑ unallowed deformation of the wheel rims.

Figure 7

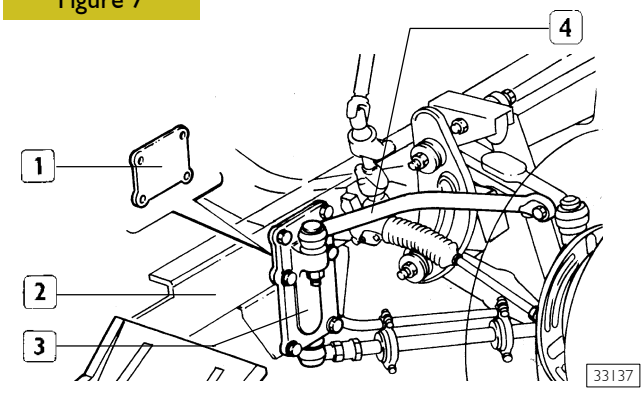

❑ Ensure the presence of spacers (1) between side members (2) and tie rod (4) attachment mountings (3) (with the exception of vehicles equipped with 5 mm thick side members). If not, proceed as described on page 56.

The checks and possible operations on the wheel geometry must be carried out with the vehicle at static load. Make sure, periodically, that the optical unit are perfectly calibrated.

Perform the geometry check using the tool 99305354.

Positioning jaws and projectors

Figure 8

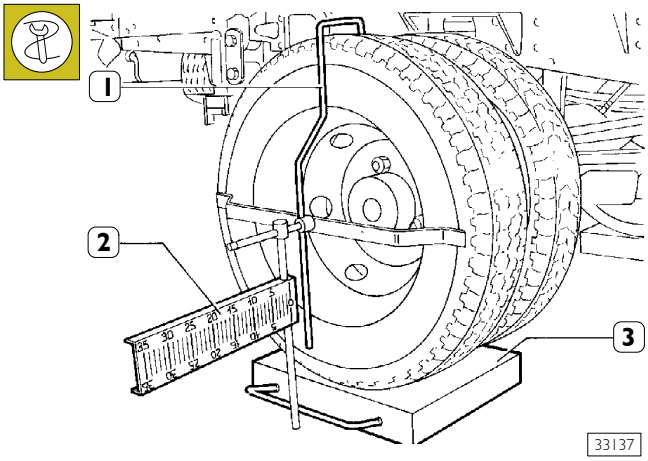

Place the vehicle with the wheel in straight running position on a level surface. Lift the rear of the vehicle and position the board (3). Lower the vehicle, brake the rear wheels and apply the hook (1) with the slide rule (2).

Figure 9

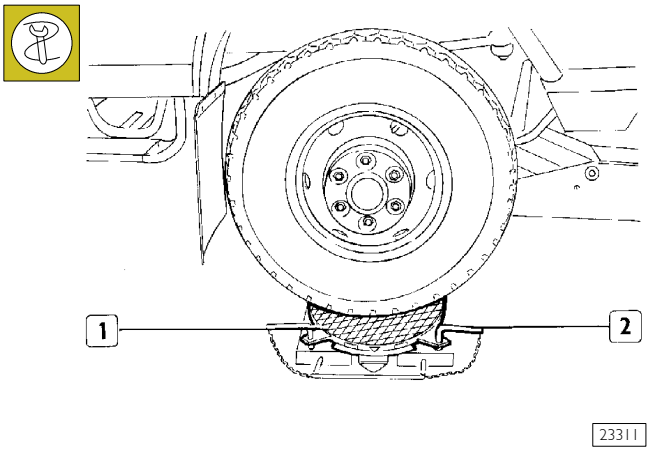

Lift the vehicle front part and position the floating wheels (1) locking them with the locks (2).

Figure 10

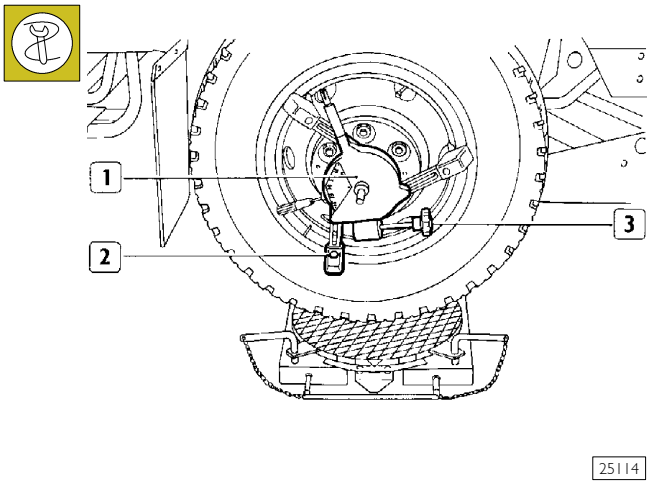

Position the clutch jaw (1) fitted with fixing pins (2). Operating the handgrip (3), lock the jaw on the wheel, making sure that it is perfectly secured.

Figure 11

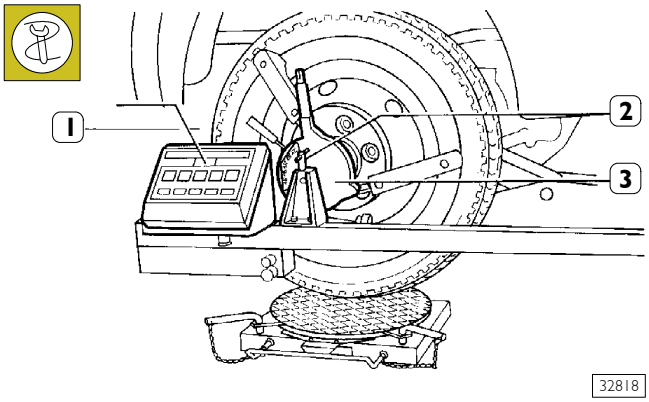

Assemble the detecting unit (1) on the jaws (3) and constrain it with the screw (2). Repeat the operation on the other wheel.

Electronic balancing of rim eccentricity

Figure 12

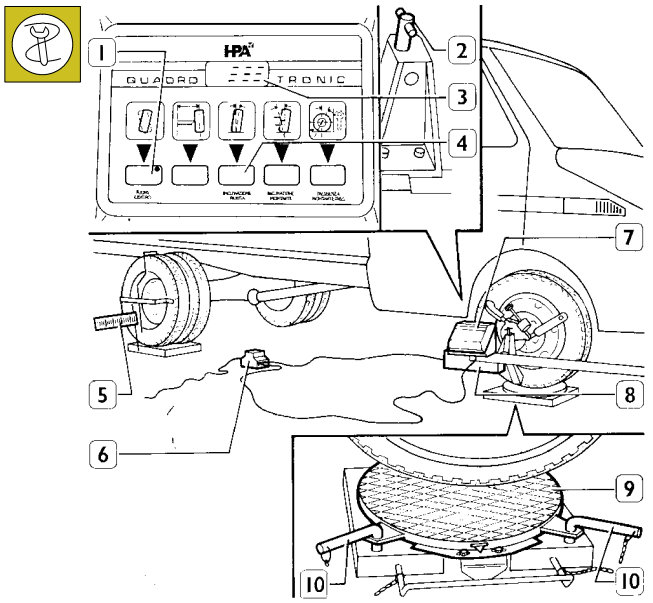

32819

Connect the detectors plugs (7) to the transformer (6) and switch on the switch (8); loosen the locking screw (2) of the detector and lift the detector lens guard (7).

Make sure that the laser beam does not hit the eyes of people, it will severely damage their sight.

Press the push-button "out of centre" (1) for at least two seconds, the display (3) shows nine lines.

Manually rotate the wheel slowly in the running direction and project the light signal on the slide rule scale (5).

Stop the wheel when the signal read on the slide rule (5) has reached the maximum value and note down the value (e.g. 12).

Rotate the wheel again until the minimum value is reached and note it down (e.g. 8).

Calculate the mean value of the amplitude: 12 + 8 = 20 : 2 = 10 and position the wheel on the mean value calculated marking its position.

Press the push-button "out of centre " again (1) until the LED (4) of the wheel camber is lighted and on the display (3) a fictitious value is shown.

Repeat the operations on the other wheel.

Lower the vehicle so that the wheels, in the position previously marked, completely rest at the centre of the floating discs (9).

Loosen the floating discs (9) from their bases extracting the pins (10).

Figure 13

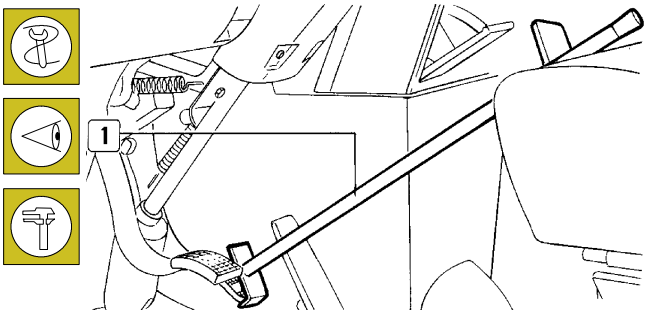

25120

Press the brake pedal locking it with the suitable tool (1) positioned against the seat.

The wheels must be braked during the whole measuring cycle.

Wheel alignment

Figure 14

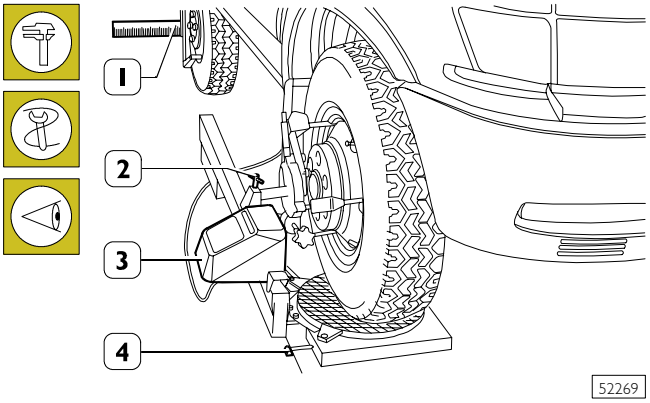

52269

Using the level (4) arrange horizontally the detectors (3) and fix them to their position with the screw (2).

Move the slide rules (1) until they are centred by the light signal transmitted by the detector (3) and note down the values.

Figure 15

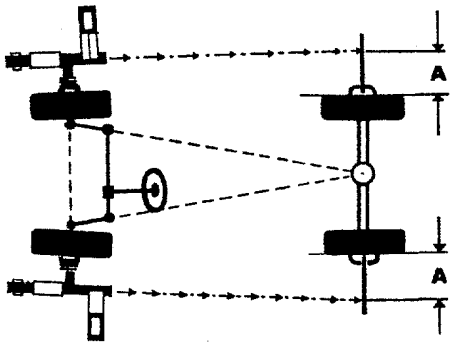

13952

If the values are different, steer the wheels until the light signal indexes are set to two values equal (A) and exactly the mean value of the two previous readings.

In this way a perfect wheel alignment is obtained.

Checking toe-in

Figure 16

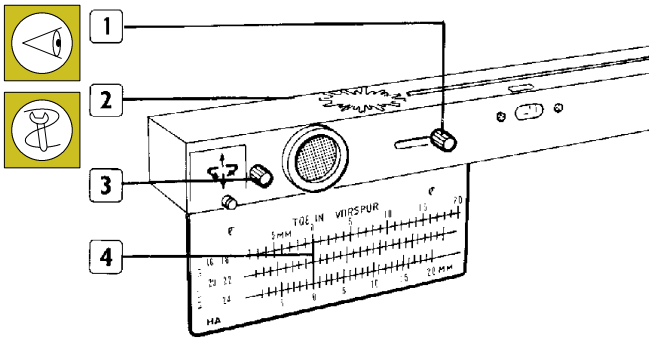

25122

Keeping the detectors in horizontal position and the wheels perfectly aligned, move the lens guard (2) using the lever (1)

Operate the lever (3) and direct the light signal index on the slide rule scale (4) corresponding to the rim diameter.

Figure 17

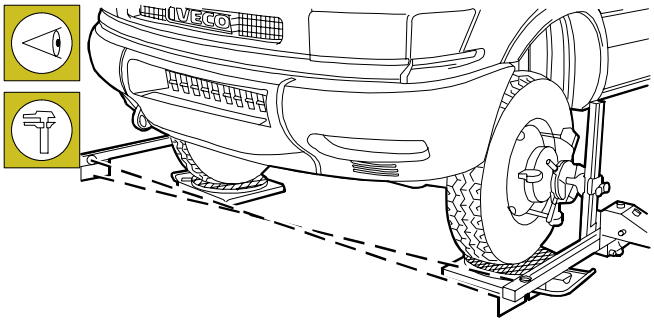

52270

Repeat the same operations on the opposite detector and read the toe-in value on the scales (in millimetres): the result of the algebraic sum of the two values must be the prescribed value.

Figure 18

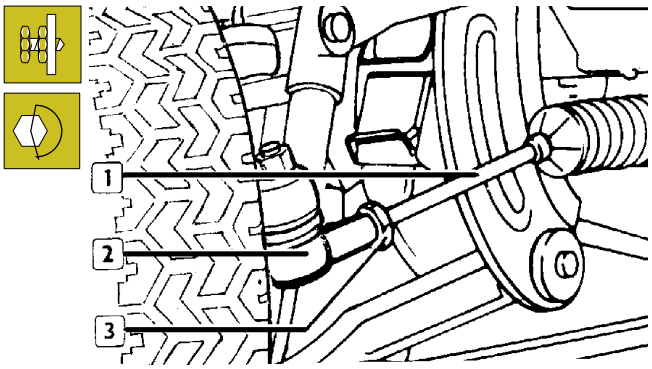

32295

The positive or negative toe-in adjustment is carried out as follows:

Loosen the nuts (3) on the joint heads (2, right and left).

Turn tie rods (1) up to obtain the toe-in of each wheel equal to half of the prescribed value.

Then tighten the nuts (3) to the prescribed torque.

Front wheel deviation test (vehicle wheelbase check)

The front wheel deviation test and toe-in reading are carried out at the same time.

The partial toe-in values, to be detected on the proper straightedges divided into millimetres, must have the same value and their sum must correspond to the whole toe-in value.

If between the readings there is a difference (e.g.: -2 and + 3), it means that there is a deviation between the two wheels: a wheel onward as to the other wheel, equal to 5 lines of the toe-in scale.

The number of lines is calculated by the algebraic sum [+3-2(-1)=5] or counting the lines included between the two values.

Each line corresponds to a deviation of 2 mm, so the deviation between the two wheels is equal to 10 mm (5 x2).

For vehicles with torsion bar suspension:

After determining which is the defective wheel, check its conditions and the exact assembly dimension of the upper and lower tie rods of the wheel suspension.

If the tie rods have been subject to deformations, replace them; if the assembly dimension is wrong, screw or unscrew the tie rod on the king-pin so that the vehicle wheel base is adjusted and the wheel are on the same axis.

In order not to change wheel caster angle, a lengthening or shortening of the lower tie rod must correspond to a lengthening or shortening of the upper tie rod.

For vehicles with transverse leaf spring suspension:

The deviation error may be due to deformation of the frame or of the assemblies connected to the wheels.

Checking camber

Figure 19

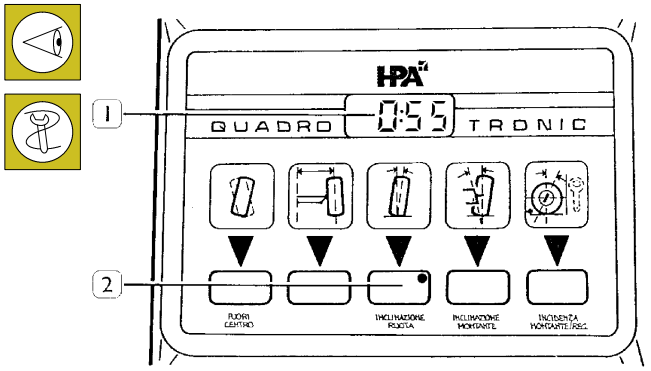

32821

When the front wheels are aligned to the rear ones and the detectors are on an horizontal plane, press the key wheel camber (2) the LED lights up and the display (1) shows the camber angle value.

Checking king-pin angle and caster angle

Figure 20

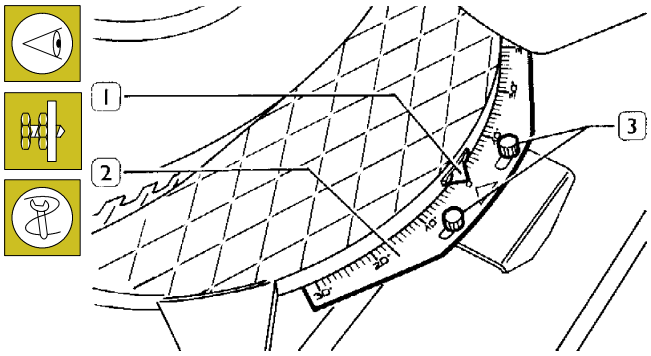

32823

When the front wheels are aligned to the rear ones, loosen the knurled knobs (3) and zero the graduated sector (2) on the index (1) of the floating disc.

Figure 21

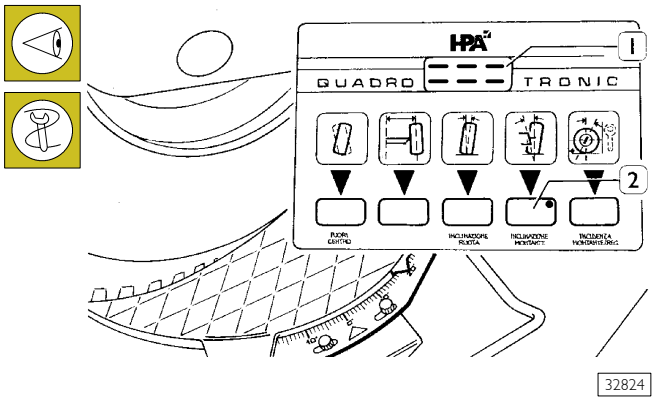

32824

Steer the wheel 20° toward the inside; press twice the king-pin camber push-button (2), the LED lights up and the display (1) shows 9 horizontal lines.

Figure 22

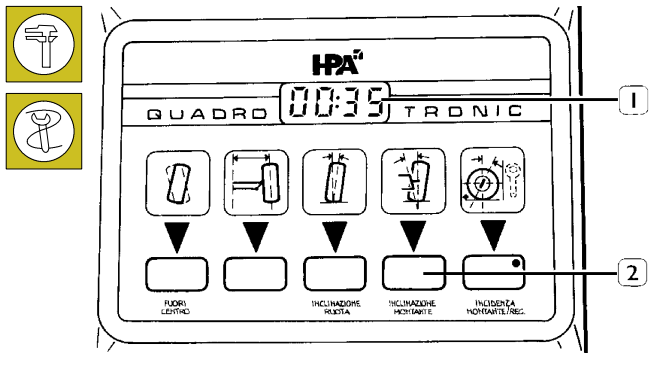

32825

Steer the wheels 20° toward the outside, press the king-pin camber push-button (2) and the display (1) shows the king-pin camber angle.

Figure 23

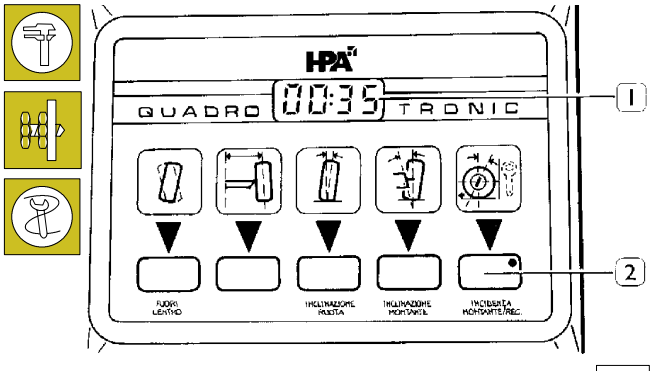

Without moving the wheel, press the caster angle push-button (2), the LED lights up and the display (1) shows the caster angle value.

Repeat these operations on the other wheel.

The king-pin camber angle and the wheel caster angle are stored, after detection, by the instrument and can be recalled when necessary pressing the push-button relevant to the concerned angle.

For regulating the caster angle proceed as follows:

- ❑ set wheels in a straight running condition;
- ❑ press the kingping angle button until its relevant LED starts blinking;
- ❑ screw and unscrew, as required, lower tie rod joint head, considering that the joint head can't carry out more than one turn.

Checking steering angles

Figure 24

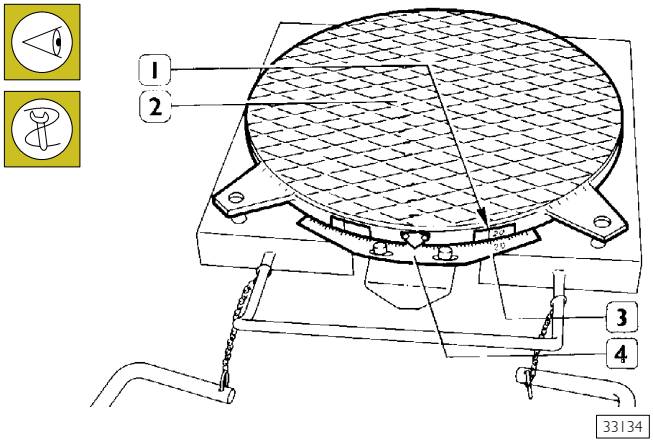

This check is carried out during the king-pin camber check of during the caster angle check, making the following operations:

- ❑ if the prescribed steering angles exceed 30°, the mark 20°(1) on the floating disc (2) and the mark 30° (3) on the graduated selector (4) mast be considered as initial reference values.
- ❑ Steer the wheels until the floating disc index of the wheel inside the bend in correspondence with the prescribed steering angle.

For steering angles higher than 30°, it is necessary to consider as reference index the mark 20° (1).

- ❑ under the above conditions, check on the other wheel that the steering angle value is as expected;
- ❑ reverse steering and check again.

If different values are found, possible causes can be:

- ❑ wrong centering of the steering box;
- ❑ deformations caused by impacts;
- ❑ deviation error between axles (front and rear axles) higher than 20 mm.

Checking and adjusting toe-in with gauge 99305108

Figure 25

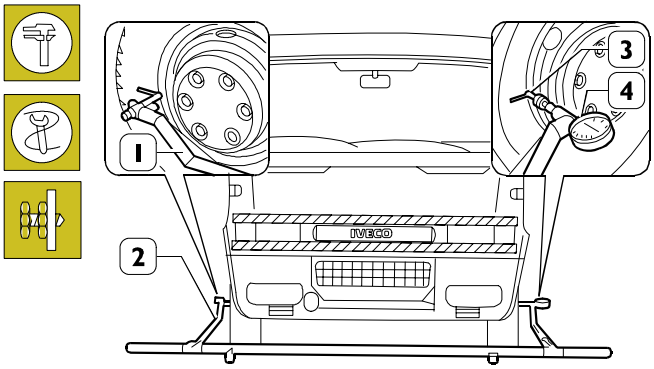

Carry out the preliminary checks of the vehicle as described in the relevant paragraph, on page 55 and proceed as follows:

- ❑ position gauge 99305108 (2) as shown in the figure;
- ❑ adjust gauge index height (1 and 3) in order to bring them to the wheel centre height, then adjust the gauge with the index in contact with the external edges of the wheel rims to the rear side, mark with chalk and set dial gauge (4) to zero;
- ❑ Remove the gauge and move the vehicle so that wheels carry out 180° rotation.

Position the gauge again so that the indexes touching the rim edge correspond to the mark.

The measure read on the test indicator must be the prescribed value, otherwise proceed as described on page 52.

Checking rear axle alignment

Figure 26

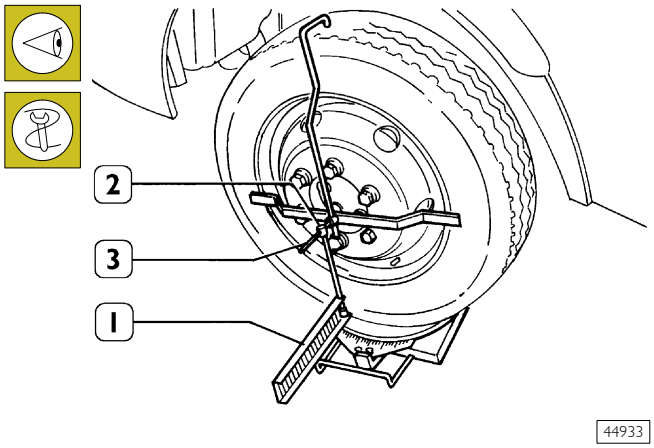

Apply the slide rule (1) to the front wheels checking that the cursor (2) is exactly in the middle of the two ring splines of the shaft (3)

Apply the detectors to the rear wheels and proceed as already described for the front axle wheels.

Figure 27

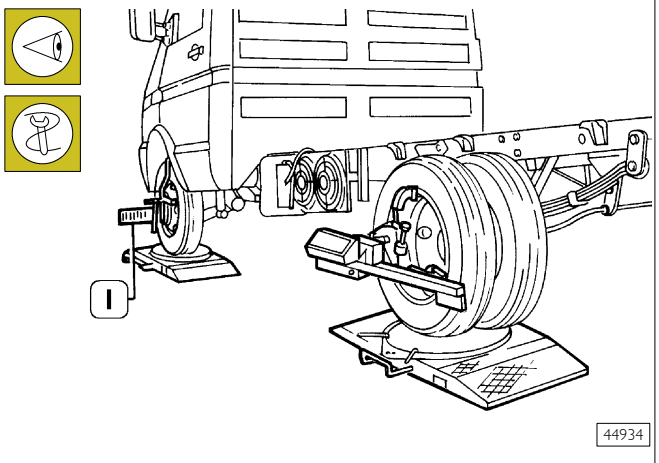

Project the light signal on the slide rule (1) and mark the value shown.

Repeat the measure on the other wheel and check that the value is equal to the noted down value, otherwise carefully check the vehicle rear axle assembly

If no malfunctions are detected, check that the frame is not deformed, sticking to the procedures described in the section "Body and frame".

Calculating thickness of spacers to be fitted between tie rod mountings and chassis side members (with the exception of vehicles equipped with 5-mm thick chassis or with transverse leaf-spring suspension)

Figure 28

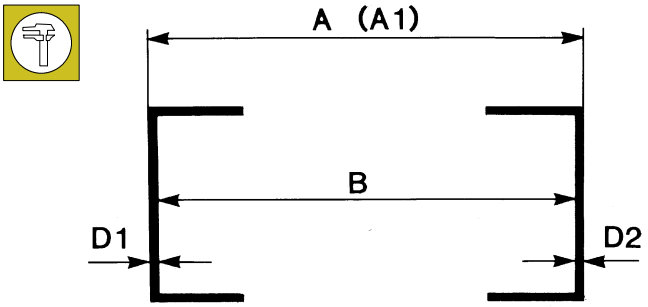

Introduction

The external width of the chassis with reference to tie rod mountings attachment point can vary from vehicle to vehicle depending on chassis assembling tolerances and side member thickness.
Therefore, width **A** (864 mm) is considered as an acceptable reference value on which to base correct wheel geometry.
The above value results from the sum of chassis internal width **B** (854 ± 2 mm) plus thickness $D_1 - D_2$ of a 4 mm thick chassis.

Proceed as follows.

Measure external chassis width A_1 at the axle.

If chassis width is not 864 mm (reference value **A**), subtract your reading (for example, A_1 = 859 mm) from the reference value: 864 - 859 = 5 mm.

Divide this figure by 2 (5 : 2 = 2.5 mm).
2.5 mm is therefore the thickness of the compensating spacers that should be fitted to each side member.

Spacers are supplied as spare parts in the following thicknesses: 1 - 1.5 - 2 mm.

Figure 29

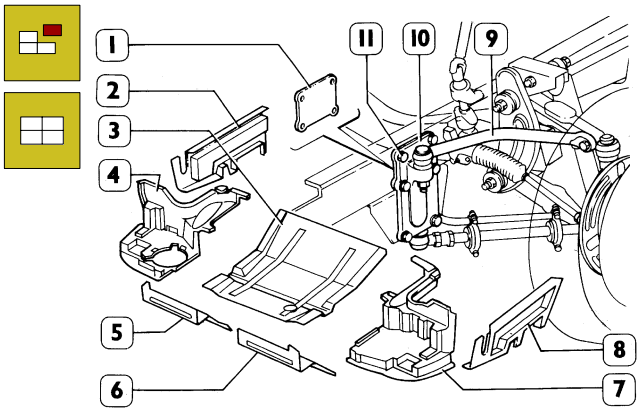

Proceed as follows to install compensating spacers (1).

Dismantle:

- ❑ Rh and lh front engine guard (5 and 6).
- ❑ Engine oil sump guard (3).
- ❑ Rh and lh wheel guard (4 and 7).
- ❑ Rh and lh side engine guard (2 and 8).

Position spacers (1) of the thickness calculated before, fit mounting (10), screw in screws (11) and lock them to a torque of 14.25 kgm (142.5 Nm).

Reassemble all previously dismantled guards.

When assembly is completed, check and adjust wheel geometry as required following directions provided in the relevant chapters.

SECTION 8

Suspensions

Page

FRONT AND REAR MECHANICAL SUSPENSIONS 3

REAR AIR SUSPENSIONS 77

Front and rear mechanical suspensions

	Page
DIAGNOSTICS	5
FRONT MECHANICAL SUSPENSIONS	9
REAR MECHANICAL SUSPENSIONS	47

DIAGNOSTICS

Main possible suspension defects

1 - noisy suspension;
2 - the vehicle tends to drift to one side;
3 - excessive suspension flexibility;
4 - excessive suspension stiffness.

1 NOISY SUSPENSION

Insufficient lubrication. – YES → Lubricate carefully.

NO

Shock absorbers noisy or inefficient. – YES → Check and if necessary replace shock absorbers.

NO

Wheel bearings worn and with excessive backlash. – YES → Replace bearings or adjust backlash.

NO

Wishbone spring bushes worn. – YES → Detach wishbones and replace bushes.

NO

Wishbone articulated heads worn. – YES → Replace wishbone articulated heads.

NO

Tie-rod articulated heads worn (vehicles with torsion bar suspension). – YES → Replace tie-rod articulated heads.

(Continues)

Steering knuckle nuts or fastening ring nuts loose (vehicles with torsion bar suspension).
– YES → Check and tighten nuts and fastening ring nuts to driving torque.

NO ↓

Stabilizer bar spring bushes worn.
– YES → Replace spring bushes.

NO ↓

Stabilizer bar fastening screw nuts loose.
– YES → Check and tighten to torque.

NO ↓

Suspension fastening nuts and screws loose.
– YES → Check and tighten suspension fastening nuts and screws to torque.

NO ↓

Torsion bar toothing worn.
– YES → Detach torsion bars and replace them and adjust pre-loading.

NO ↓

Toothing of torsion bar rear supports or of wishbones worn.
– YES → Replace rear support or upper wishbones and adjust torsion bar pre-loadings.

NO ↓

Leaf spring supports loose.
– YES → Check the supports and replace chassis fastening screws or rivets if they are loose.

NO ↓

Leaf spring pack loose for central fastening pin failure.
– YES → Overhaul leaf springs and replace central pin and its self-locking nut.

(Continues)

Leaf spring pack loose for spring fixing brackets fastening rivets failure.	– YES →	Check leaf spring fixing brackets and replace fastening rivets.

2 THE VEHICLE TENDS TO DRIFT TO ONE SIDE

Tyre pressure low or incorrect.	– YES →	Check and accurately inflate tyres to the prescribed pressure.

NO ↓

Incorrect front wheel geometry.	– YES →	Check and correct wheel geometry.

NO ↓

Too much front wheel bearing play.	– YES →	Replace the wheel hubs.

NO ↓

Inefficient hydraulic shock absorbers.	– YES →	Remove shock absorbers and replace them.

NO ↓

Torsion bar broken.	– YES →	Replace torsion bar and adjust pre-loading.

NO ↓

Incorrect torsion bar pre-loading adjustment.	– YES →	Check and adjust torsion pre-loading.

NO ↓

Leaf spring broken.	– YES →	Overhaul the leaf spring and replace if necessary.

(Continues)

Incorrect vehicle loading. – YES → Check the load and arrange it evenly over the loading area.

3 EXCESSIVE SUSPENSION FLEXIBILITY

Torsion bars yielded. – YES → Replace torsion bars and adjust pre-loading.

NO

Incorrect torsion bar pre-loading adjustment. – YES → Check and adjust torsion bar pre-loading.

NO

Shock absorbers inefficient. – YES → Check and replace the shock absorbers if necessary.

NO

Leaf spring central pin broken. – YES → Replace the component.

NO

Leaf spring leaves yielded or broken. – YES → Overhaul the spring and replace the unusable components or, if necessary, the entire spring.

4 EXCESSIVE SUSPENSION STIFFNESS

Incorrect torsion bar pre-loading adjustment. – YES → Check and adjust torsion bar pre-loading.

Front mechanical suspensions

	Page
DESCRIPTION	11
ARTICULATED QUADRILATERAL SUSPENSION WITH TRANSVERSE LEAF SPRING	11
SPECIFICATIONS AND DATA	12
❑ Front leaf spring	12
❑ Front suspension stabilizer bar (axle 5817)	13
❑ Front shock absorbers	14
TOOLS	14
❑ VEHICLE SUSPENSIONS 29 L - 35 S WITHOUT SWAY BAR	14/1
❑ Shock absorber data	14/1
TIGHTENING TORQUES	14/2
❑ Vehicles 29 L - 35 S (without sway bar)	14/2
TIGHTENING TORQUES	15
❑ Vehicles 29 L - 35 S	15
TIGHTENING TORQUES	16
❑ Vehicles 35 C	16
TIGHTENING TORQUES	17
❑ Vehicles 29 L - 35 S - 35C	17
REPAIRS	18
OVERHAULING THE SUSPENSION	18
❑ Suspension arms	18
❑ Removal	18
❑ Replacing suspension arm bushings	18
❑ Disassembly	18
❑ Assembly	18
❑ Refitting	19
STABILIZER BAR	20
❑ Removal	20
❑ Refitting	20
FRONT SHOCK ABSORBERS	20
❑ Removal	20
❑ Refitting	20
LEAF SPRING	21

	Page
❑ Removal	21
❑ Refitting	22
TORSION BAR SUSPENSION	23
❑ Axle 5819 - vehicles 35C - 40C - 45C - 50C	23
❑ Description	23
SPECIFICATIONS AND DATA	24
❑ Front shock absorbers	24
❑ Stabilizer bar diameter	24
TOOLS	25
TIGHTENING TORQUES	27
❑ Vehicles 35 C - 40 C - 45 C - 50 C	27
REPAIRS	29
OVERHAULING THE SUSPENSION	29
TIE RODS	29
❑ Removal	29
❑ Replacing swivel heads	29
❑ Refitting	30
TORSION BARS	30
❑ Removal	30
❑ Replacing silentbloc and limit stops	31
❑ Replacing link pins	31
❑ Refitting	32
❑ Adjusting torsion bar pre-load	34
STABILIZER BAR	35
❑ Removal	35
❑ Refitting	35
FRONT SHOCK ABSORBERS	35
❑ Removal	35
❑ Refitting	35
TORSION BAR SUSPENSION	37
❑ Axle 5823 - vehicles 60C - 65C	37

	Page
❑ Description	37
SPECIFICATIONS AND DATA	38
❑ Front shock absorbers	38
❑ Stabilizer bar	38
TIGHTENING TORQUES	39
EQUIPMENT	41
REPAIR OPERATIONS	42
SUSPENSION OVERHAUL	42
❑ Lower tie rod articulated heads replacement	42
TORSION BARS	42
❑ Removal	42
❑ Rubber bush replacement	43
❑ Removal	43
❑ Refitting	43
❑ Torsion bar preload adjustment	46

MECHANICAL FRONT SUSPENSIONS

DESCRIPTION

The front suspension has independent wheels of the type:

- with an articulated quadrilateral with a transverse leaf spring for axles 5817 and 5818;
- with longitudinal torsion bars for axle 5819 and 5823.

ARTICULATED QUADRILATERAL SUSPENSION WITH TRANSVERSE LEAF SPRING (vehicles 29l - 35s - 35c)

The suspension comprises:

- two top triangular suspension arms, composed of a sheet-metal shell, connected by elastic bushings to the crosspiece by pins articulated to the stub axle;
- two bottom triangular suspension arms, composed of two sheet-metal half-shells welded together, connected by elastic bushings with metal reinforcement to the crosspiece and pins articulated to the stub axle.
  The bottom suspension arms have reaction points for the leaf spring and the bottom mountings of the shock absorbers;
- a single-blade leaf spring, made of composite material for axles 5817 mounted on vehicles 29 L and 35 S, steel for axles 5818 mounted on vehicles 35 C; the spring is kept inside the crosspiece by two top reaction plugs fitted on the ends of the spring housed in the seats in the bottom suspension arms.
  The steel leaf spring, due to the resistance it provides for the rolling movements of the vehicle, makes mounting the front stabilizer bar superfluous;
- two double-acting hydraulic shock absorbers with integrated limit stops;
- stabilizer bar on vehicles 29 L - 35 S.

Figure 1

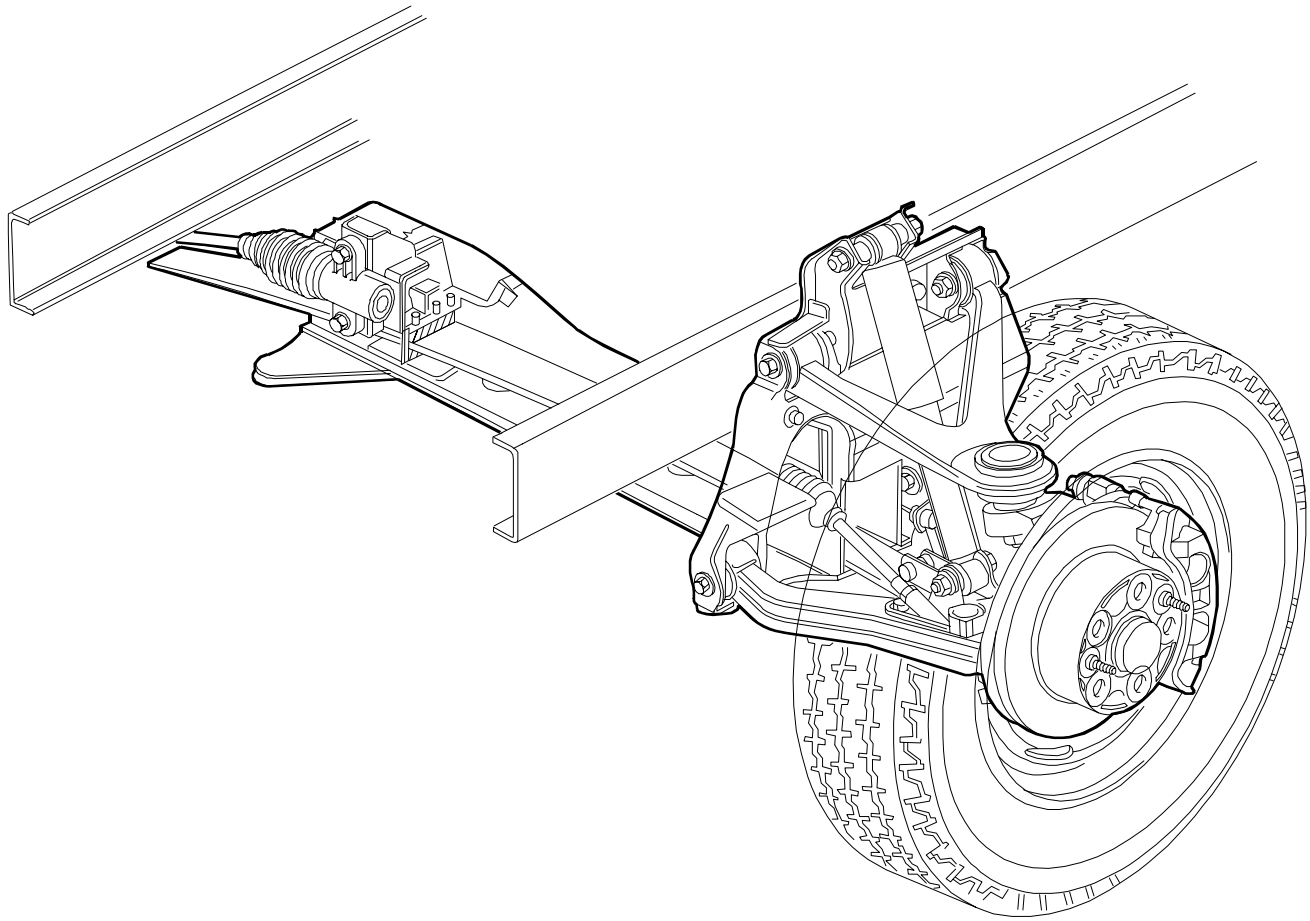

62102

SPECIFICATIONS AND DATA

Front leaf spring

Models: 29 L - 35 S			
Transverse			N° 1
Spring length	(mm)		1313.2
Sheet thickness measured at	(mm)	A	39.92 ± 0.50
Sheet width measured at	(mm)	B	56.0 ± 0.5
		C	81.0 ± 0.5

Figure 2

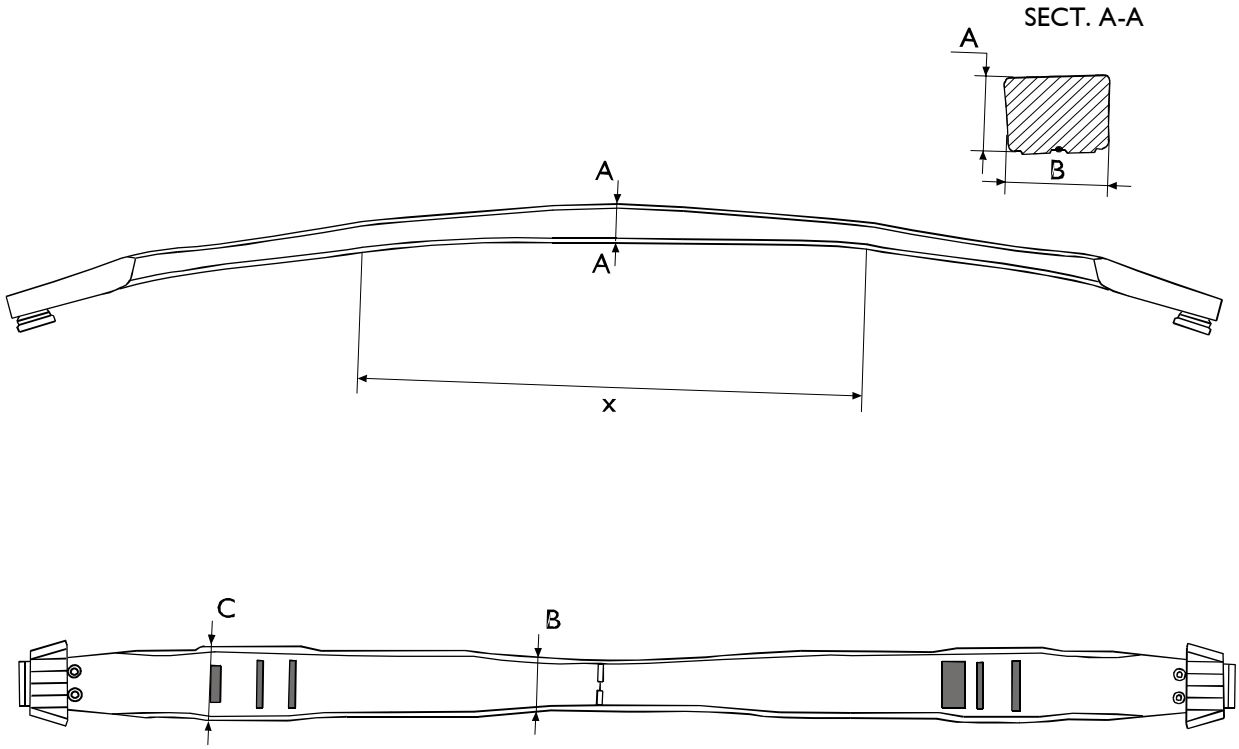

52322

COMPOSITE LEAF SPRING

NEW LEAF SPRING CHECK DATA			
		29 L	35 S
STATIC LOAD	(N)	19865	21040
SAG WITH STATIC LOAD	(mm)	71.7	68.4
DYNAMIC LOAD	(N)	34270	37005
SAG WITH DYNAMIC LOAD	(mm)	123.7	120.4
FLEXIBILITY ± 5%1	(mm/kN)	277	307.0
DISTANCE BETWEEN SUPPORT PLUGS	(mm)	540	600

Front leaf spring

Models: 35 C		
Transverse		N° 1
Spring length	(mm)	1365 ± 3
Sheet thickness	(mm)	20 ± 0.2
Sheet width	(mm)	80 ± 0.5

Figure 3

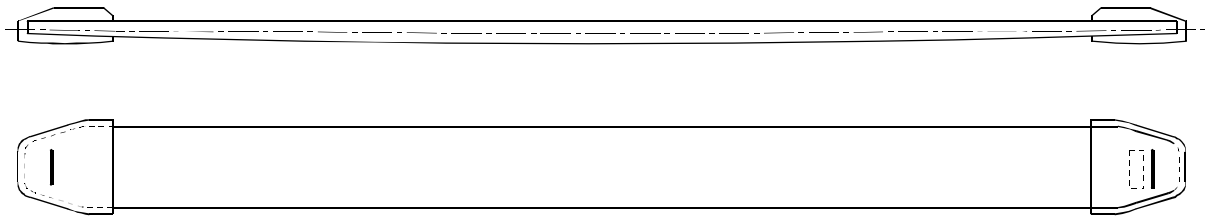

50824

STEEL LEAF SPRING

NEW LEAF SPRING CHECK DATA					
POSITION	LOAD		CAMBER (mm)	FLEXIBILITY	
	daN	kg		mm/100 daN	mm/100 kg
STATIC LOAD	845.1	861.5	70.25	8.31	8.15
DYNAMIC LOAD	1453.3	1481.4	120.8		

Front suspension stabilizer bar (axle 5817)

		Models: 29 L - 35 C
Stabilizer bar diameter	(mm)	18

Front shock absorbers

Models:	29 L - 35 S - 35 C		
		Mannesmann - Sachs	Arvin Meritor
	Distance between centre of eyes:		
	Open (mm)	405 ± 3	
	Closed (mm)	320 ± 3	
	Stroke (mm)	85	

TOOLS

TOOL NO.		DESCRIPTION
99321024	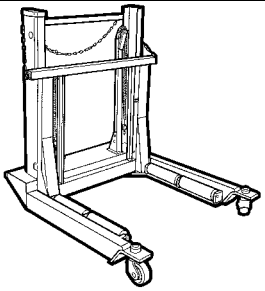	Hydraulic trolley for wheel removal and refitting
99347074	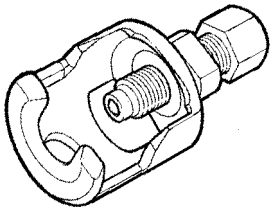	Extractor to take out link pins
99374179	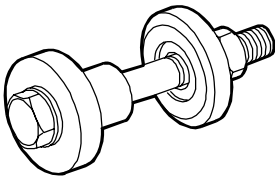	Tool for disassembling and reassembling suspension arm flexible bushings

VEHICLE SUSPENSIONS 29 L - 35 S WITHOUT SWAY BAR
(recent production with rebound pad integrated in shock absorbers).

Figure 3/1

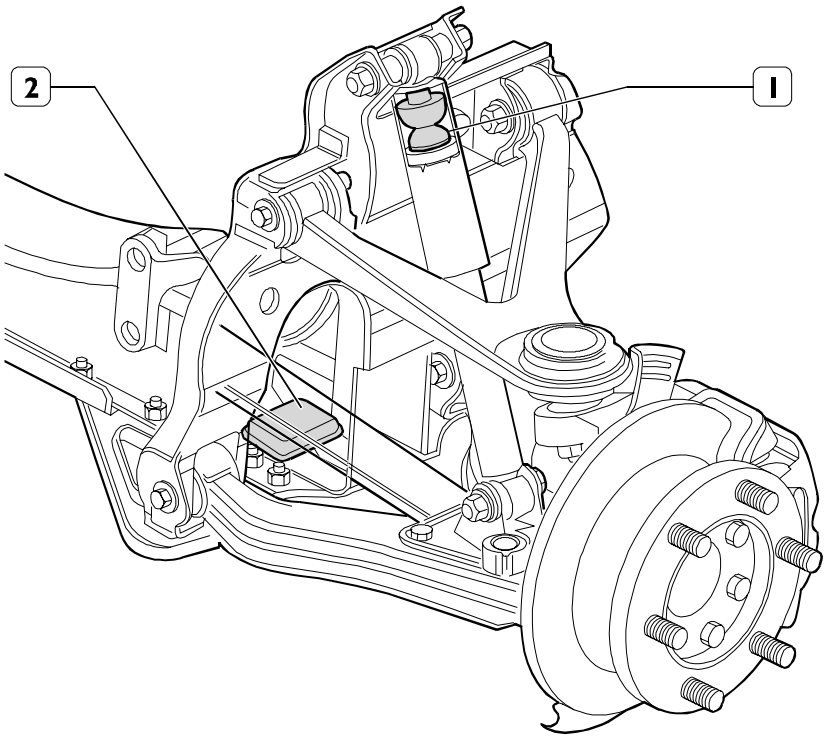

1. Built-in rebound - 2. Reaction pad.

Shock absorber data

Models:	29 L - 35 S	
		Alvin Meritor
	Length between eyebolt centres:	
	Open (mm)	405 ± 3
	Closed (start of damping) (mm)	380 ± 3
	Closed (pad squeezed) (mm)	340 ± 3
	Stroke (mm)	65

TIGHTENING TORQUES
Vehicles 29 L - 35 S (without sway bar)

Figure 3/2

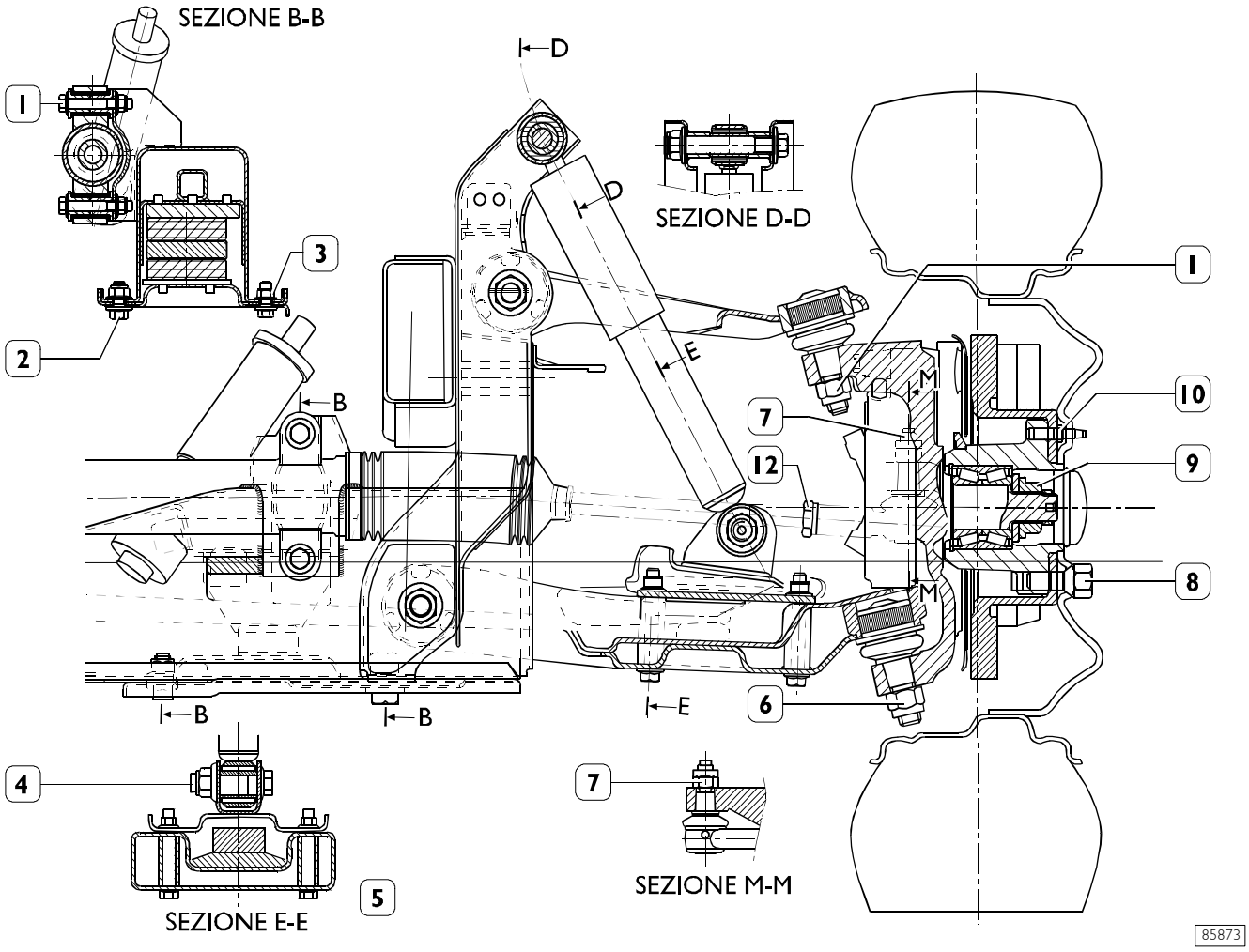

COMPONENT		TORQUE	
		Nm	kgm
1	Screw for nut securing steering gear housing	50 ÷ 61	5 ÷ 6.1
2	M12 screw for nut securing leaf spring mounting to the cross member	100 ÷ 124	10 ÷ 12.4
3	M10 screw for nut securing leaf spring mounting to the cross member	39 ÷ 48	3.9 ÷ 4.8
4	Nut for screw securing shock absorber top and bottom	124 ÷ 152	12.4 ÷ 15.2
5	Screw for nut securing shock absorber mounting to bottom suspension arm	39 ÷ 48	3.9 ÷ 4.8
6	Nut securing bottom suspension arm ball joint to the stub axle	160 ÷ 180	16 ÷ 18
7	Nut securing steering gear housing tie rod ball joint to the stub axle	68 ÷ 83	6.8 ÷ 8.3
8	Screw securing wheel	160	16
9	Nut securing hub to stub axle	256 ÷ 314	25.6 ÷ 31.4
10	Screw securing brake disc to wheel hub	19.5 ÷ 24	1.9 ÷ 2.4
11	Nut securing top suspension arm ball joint to the stub axle	125 ÷ 140	12.5 ÷ 14
12	Nut securing ball joint to the steering gear housing tie rod	70 ÷ 100	7 ÷ 10
-	Nut fixing stabilizer bar reaction link rod	35 ÷ 53	3.5 ÷ 5.4

TIGHTENING TORQUES
Vehicles 29 L - 35 S

Figure 4

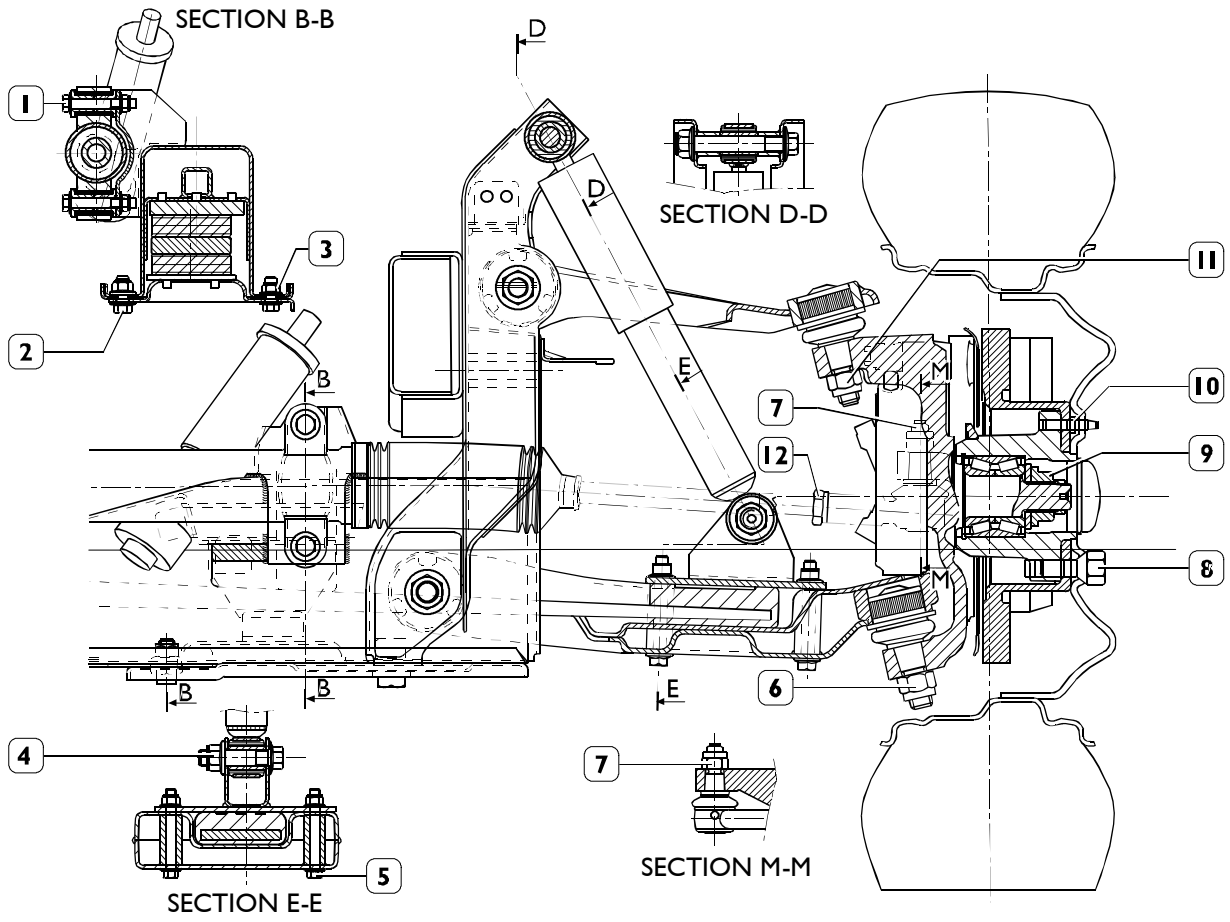

COMPONENT		TORQUE	
		Nm	kgm
1	Screw for nut securing steering gear housing	50 ÷ 61	5 ÷ 6.1
2	M12 screw for nut securing leaf spring mounting to the cross member	100 ÷ 124	10 ÷ 12.4
3	M10 screw for nut securing leaf spring mounting to the cross member	39 ÷ 48	3.9 ÷ 4.8
4	Nut for screw securing shock absorber top and bottom	124 ÷ 152	12.4 ÷ 15.2
5	Screw for nut securing shock absorber mounting to bottom suspension arm	39 ÷ 48	3.9 ÷ 4.8
6	Nut securing bottom suspension arm ball joint to the stub axle	160 ÷ 180	16 ÷ 18
7	Nut securing steering gear housing tie rod ball joint to the stub axle	68 ÷ 83	6.8 ÷ 8.3
8	Screw securing wheel	160	16
9	Nut securing hub to stub axle	256 ÷ 314	25.6 ÷ 31.4
10	Screw securing brake disc to wheel hub	19.5 ÷ 24	1.9 ÷ 2.4
11	Nut securing top suspension arm ball joint to the stub axle	125 ÷ 140	12.5 ÷ 14
12	Nut securing ball joint to the steering gear housing tie rod	70 ÷ 100	7 ÷ 10
-	Nut fixing stabilizer bar reaction link rod	35 ÷ 53	3.5 ÷ 5.4

TIGHTENING TORQUES
Vehicles 35 C

Figure 5

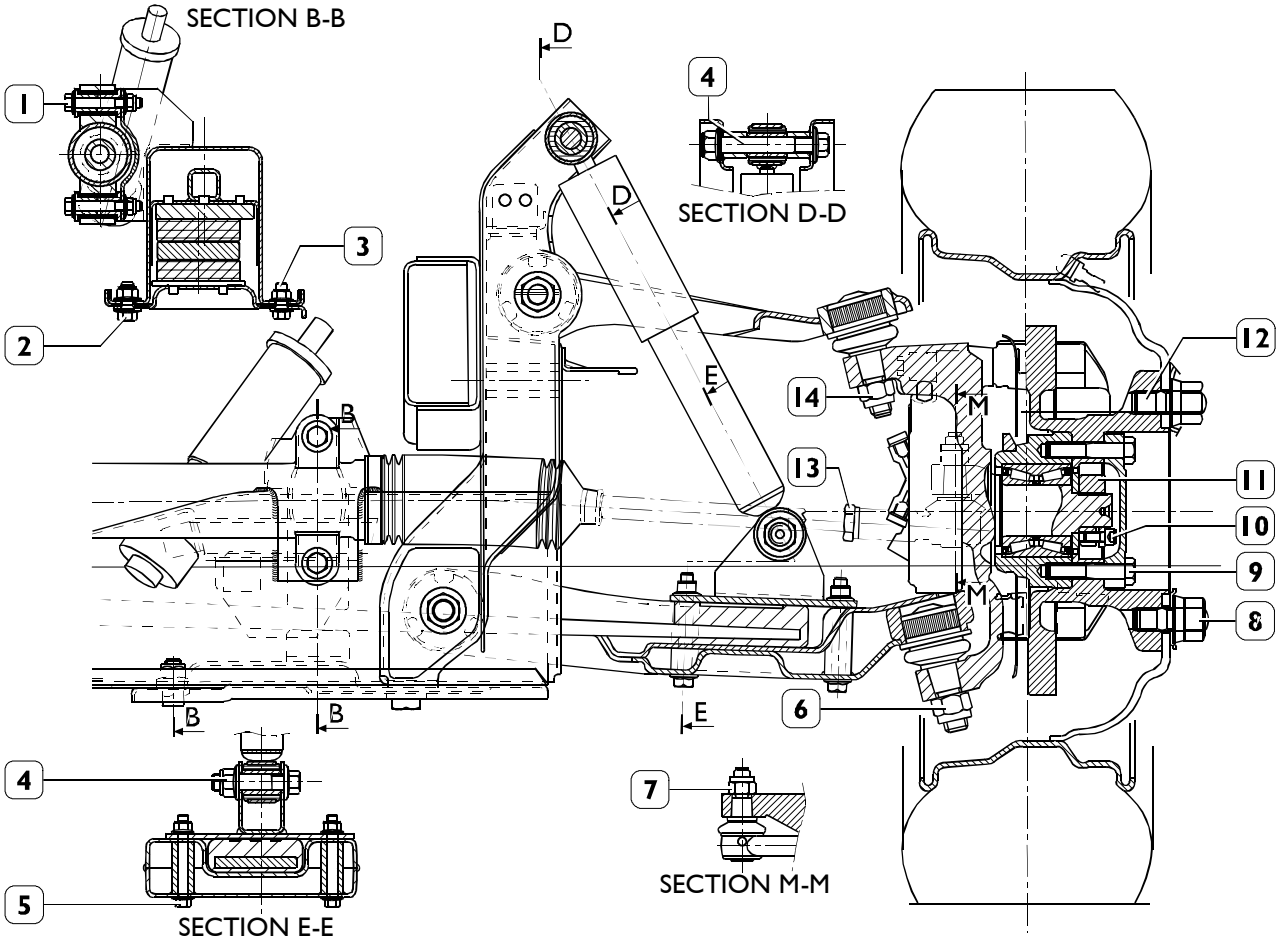

COMPONENT		TORQUE	
		Nm	kgm
1	Screw for nut securing steering gear housing	50 ÷ 61	5 ÷ 6.1
2	M12 screw for nut securing leaf spring mounting to the cross member	100 ÷ 124	10 ÷ 12.4
3	M10 screw for nut securing leaf spring mounting to the cross member	39 ÷ 48	3.9 ÷ 4.8
4	Nut for screw securing shock absorber top and bottom	124 ÷ 152	12.4 ÷ 15.2
5	Screw for nut securing shock absorber mounting to bottom suspension arm	39 ÷ 48	3.9 ÷ 4.8
6	Nut securing bottom suspension arm ball joint to the stub axle	160 ÷ 180	16 ÷ 18
7	Nut securing steering gear housing tie rod ball joint to the stub axle	68 ÷ 83	6.8 ÷ 8.3
8	Nut securing wheel	284 ÷ 342	28.4 ÷ 34.2
9	Screw securing cover and brake disc to wheel hub	98.1 ÷ 107.9	9.8 ÷ 10.7
10	Screw retaining ring nut securing hub to stub axle	20 ÷ 24	2 ÷ 2.4
11	Ghiera fissaggio mozzo al fuso snodo	257 ÷ 314	25.7 ÷ 31.4
12	Stud to brake disc (apply LOCTITE 242 or 270 sealant to the thread)	85 ÷ 104	8.5 ÷ 10.4
13	Nut securing ball joint to the steering gear housing tie rod	70 ÷ 100	7 ÷ 10
14	Nut securing top suspension arm ball joint to the stub axle	125 ÷ 140	12.5 ÷ 14

TIGHTENING TORQUES
Vehicles 29 L - 35 S - 35C

Figure 6

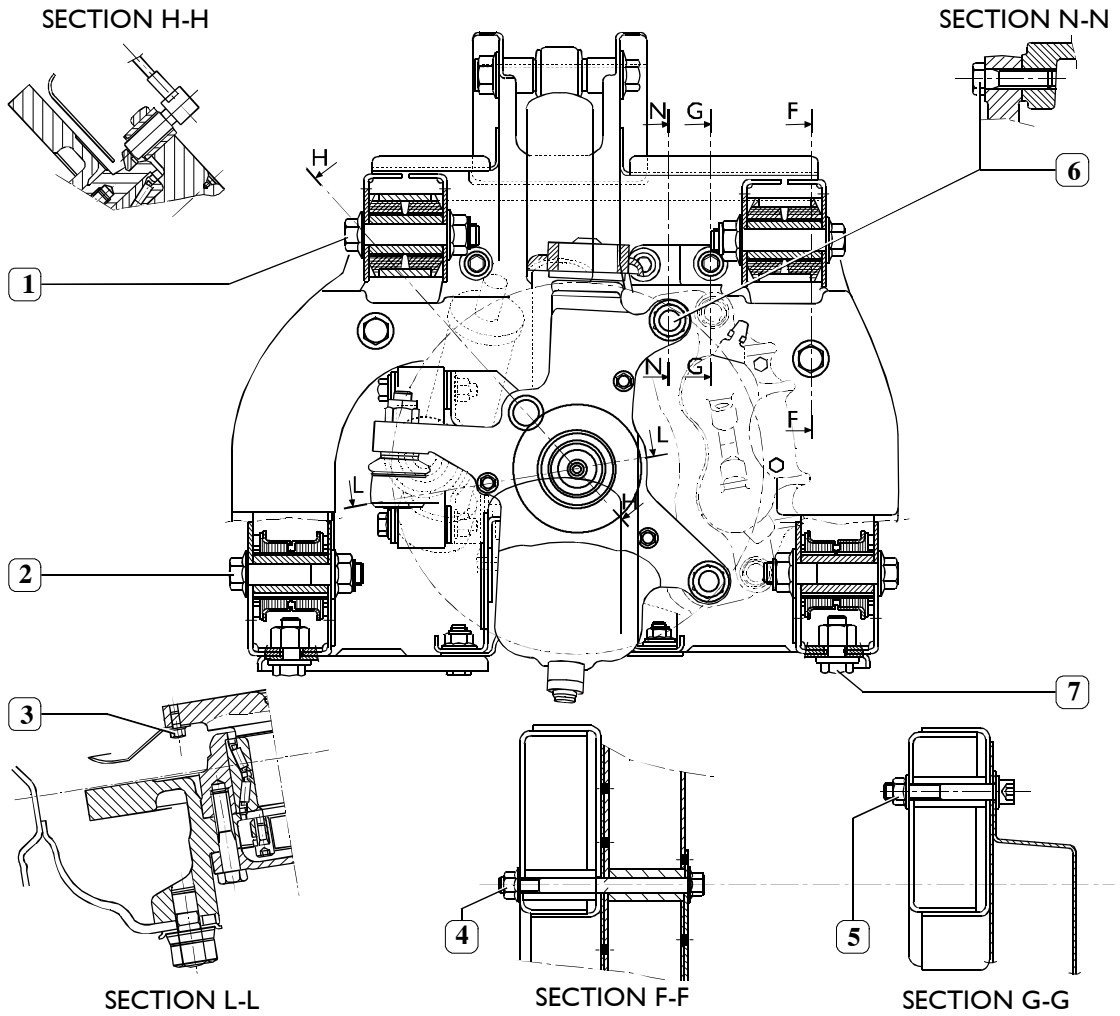

49352

COMPONENT		TORQUE	
		Nm	kgm
1 - 2	Screw for nut securing suspension arm to the top cross member and bottom to the cross member	170 ÷ 280	17 ÷ 28
3	Screw securing disc guard to the axle stub	6 ÷ 7.5	0.6 ÷ 0.7
4	Nut for screw securing cross member to chassis frame	83 ÷ 101	8.3 ÷ 10.1
5	Nut for screw securing cross member to chassis frame	83 ÷ 101	8.4 ÷ 10.1
6	Screw securing caliper mounting to the axle stub	170 ÷ 196	17.0 ÷ 19.6
7	M14 screw securing covers to the cross member	151 ÷ 184	15.1 ÷ 18.4

REPAIRS

500760 OVERHAULING THE SUSPENSION

Suspension arms

Removal

Figure 7

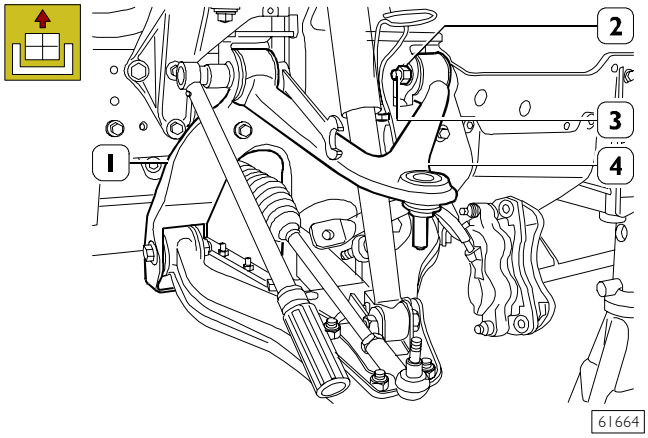

Remove the stub axle as described under the relevant heading (operation 520611 including removal of the wheel hubs operation 520620).

Take out the nuts (2), extract the screws (3) and remove the top suspension arm (4) from the mountings of the cross member (1).

Figure 8

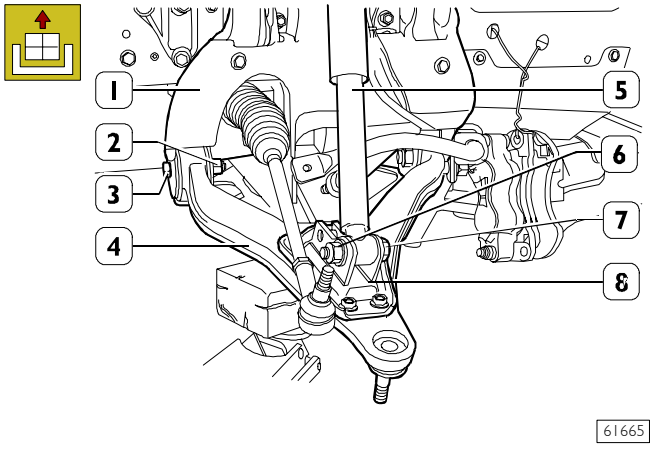

Take out the nut (6) and remove the shock absorber (5) from the mounting (8) of the bottom suspension arm, extracting the screw (7).

Take out the nuts (2), extract the screws (3) and remove the bottom suspension arm (4) from the mountings of the cross member (1).

Replacing suspension arm bushings

Disassembly

Figure 9

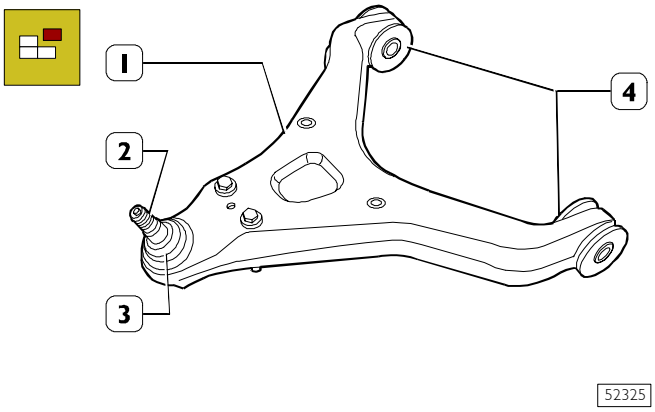

If there is damage to the caps (3) protecting the link pins (2) or if these have too much play, replace the suspension arm (1).

Using general tools, extract the flexible bushings (4) from the suspension arms (1).

Assembly

The flexible bushings of the bottom suspension arms are equipped with metal reinforcement.

Figure 10

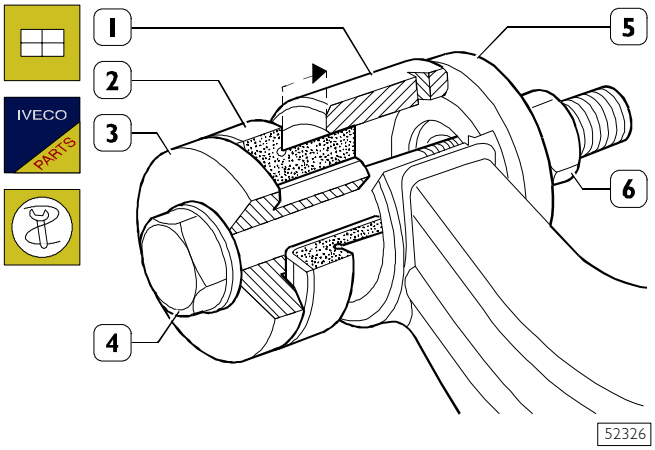

Insert the bushing (2) into the suspension arm (1).

Apply the parts (3 - 4 - 5 - 6) of the tool 99374179, as shown in the figure.

Screw on the nut (6) to make the bushing (2) flush with the suspension arm (1).

Remove the parts of tool 99374179.

Figure 11

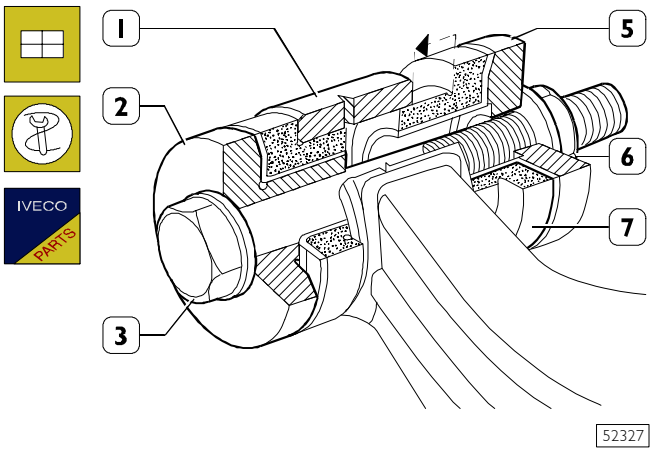

Insert the bushing (7) into the suspension arm (1).

Apply the parts (2 - 3 - 5 - 6) of the tool 99374179, as shown in the figure.

Screw on the nut (6) to make the bushing (7) flush with the suspension arm (1).

Remove the parts of tool 99374179.

Figure 12

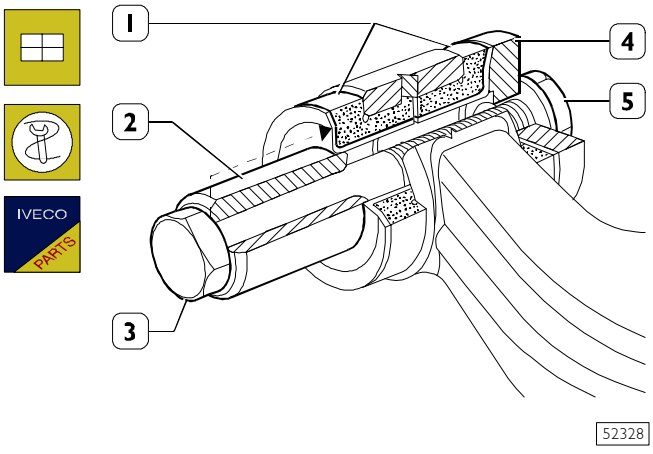

Insert the spacer (2) into the bushing (1).

Apply the parts (3 - 4 - 5) of the tool 99374179, as shown in the figure.

Screw on the nut (5) to fully insert the spacer (2) into the flexible bushings (1).

Refitting

Figure 13

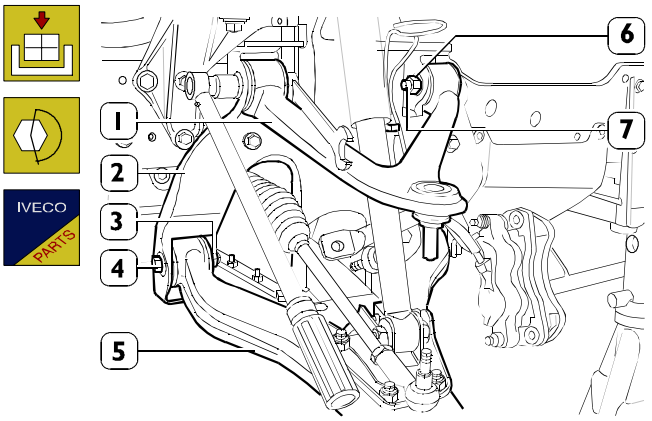

To refit the bottom (5) and top (1) suspension arms to the crosspiece (2), reverse the steps described for removal tightening the nuts (6 - 3) for the fixing screws (4 - 7) to the prescribed torque.

Self-locking nuts, once removed, must be replaced with new ones.

528030 STABILIZER BAR

Removal

Figure 14

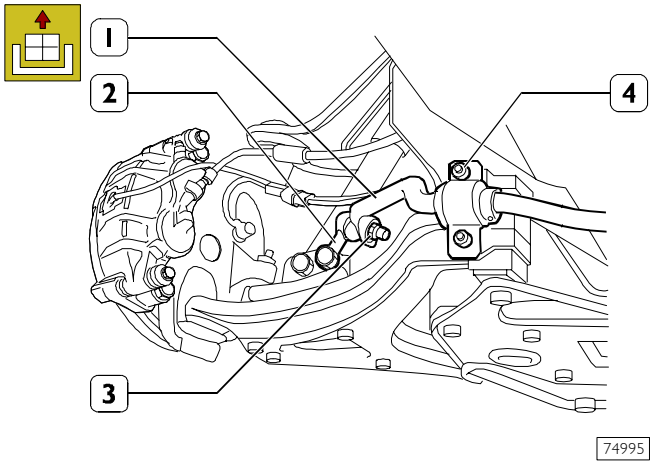

FRONT STABILIZER BAR
VEHICLES 29 L - 35S

Unscrew the nuts (3) fixing the link rods to the stabilizer bar (1),
Unscrew the screws (4) fixing the stabilizer bar (1).
If necessary, unscrew the fixing nuts and remove the reaction link rods (2).

Check that the bushings and/or elastic elements are not worn or deteriorated; if they are, replace the relevant part.

Refitting

For refitting, carry out the removal operations in reverse order and keep to the required tightening torques.

500910 FRONT SHOCK ABSORBERS

Removal

Figure 15

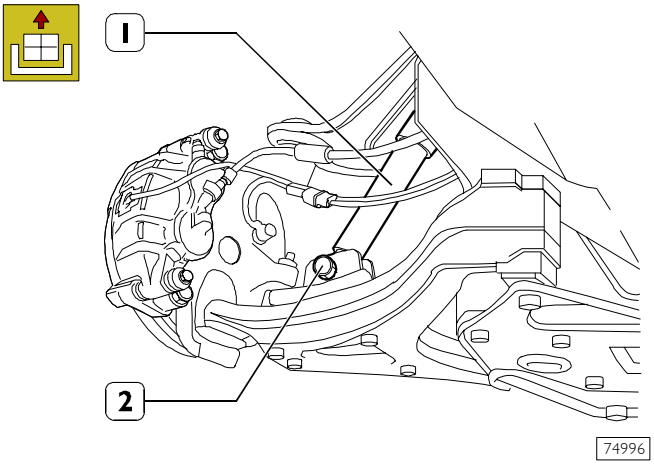

FRONT SHOCK ABSORBER
VEHICLES 29 L - 35S

Set the vehicle on level ground. Lock the rear wheels with a scotch, remove the wheel rim guards and loosen the screws or nuts fixing the wheel.
Lift the front of the vehicle and rest the chassis frame on supports.
Take out the screws or nuts fixing the wheel and remove them with tool 99321024.
Unscrew the top and bottom bolts (2) and remove the shock absorbers (1) from the vehicle.

Check that the bushings and/or elastic elements are not worn or deteriorated; if they are, replace the relevant part.

Check the efficiency of the shock absorbers with a suitable instrument.

Refitting

For refitting, carry out the removal operations in reverse order and keep to the required tightening torques.

LEAF SPRING

Removal

Set the vehicle on level ground.

Lock the rear wheels with chocks. Take off the wheel rim guards and loosen the screws or nuts securing the wheel.

Lift the front of the vehicle and rest the chassis frame on stands.
Take out the screws or nuts securing the wheel with tool 99321024.

On the right-hand side:

- ❑ using a hydraulic jack, slightly lift the stub axle so as to limit the load of the leaf spring;
- ❑ disconnect the electrical connection (1) for indicating brake lining wear;
- ❑ disconnect the ABS speed sensor (4) (if there is one);
- ❑ take out the screws (2) securing the brake caliper to the axle stub and remove it. Remove the brake linings from the brake caliper (3) and support this adequately to prevent strain on the brake pipes;

Check the state of the brake linings and brake disc as described in the BRAKES section.

- ❑ take out the nut locking the link pin of the tie rod (20) and, with tool 99347074 (19), remove the link pin (20) of the steering tie rod from the stub axle;
- ❑ take out the nut (21) and, with tool 99347074 (19), remove the link pin (22) of the top suspension arm from the stub axle;
- ❑ take out the nuts (16) and screws (18) securing the shock absorber mounting (15) to the bottom suspension arm;
- ❑ lower the hydraulic jack;

Repeat the similar operations on the left-hand side;

- ❑ take out the nuts (6 and 5) and screws (10 and 11) and remove the covers (8, 9 and 12) from the cross member (7).

Note the assembly position of the bottom flexible plugs (13) on the cover (8).

Remove the leaf spring (17).

Note the assembly position of the top flexible plugs (14) in the cross member (7).

For axle 5817 (vehicles 29L - 35S), remove nut (24) and disconnect crankpin (25) from stabiliser bar (23).

Figure 16

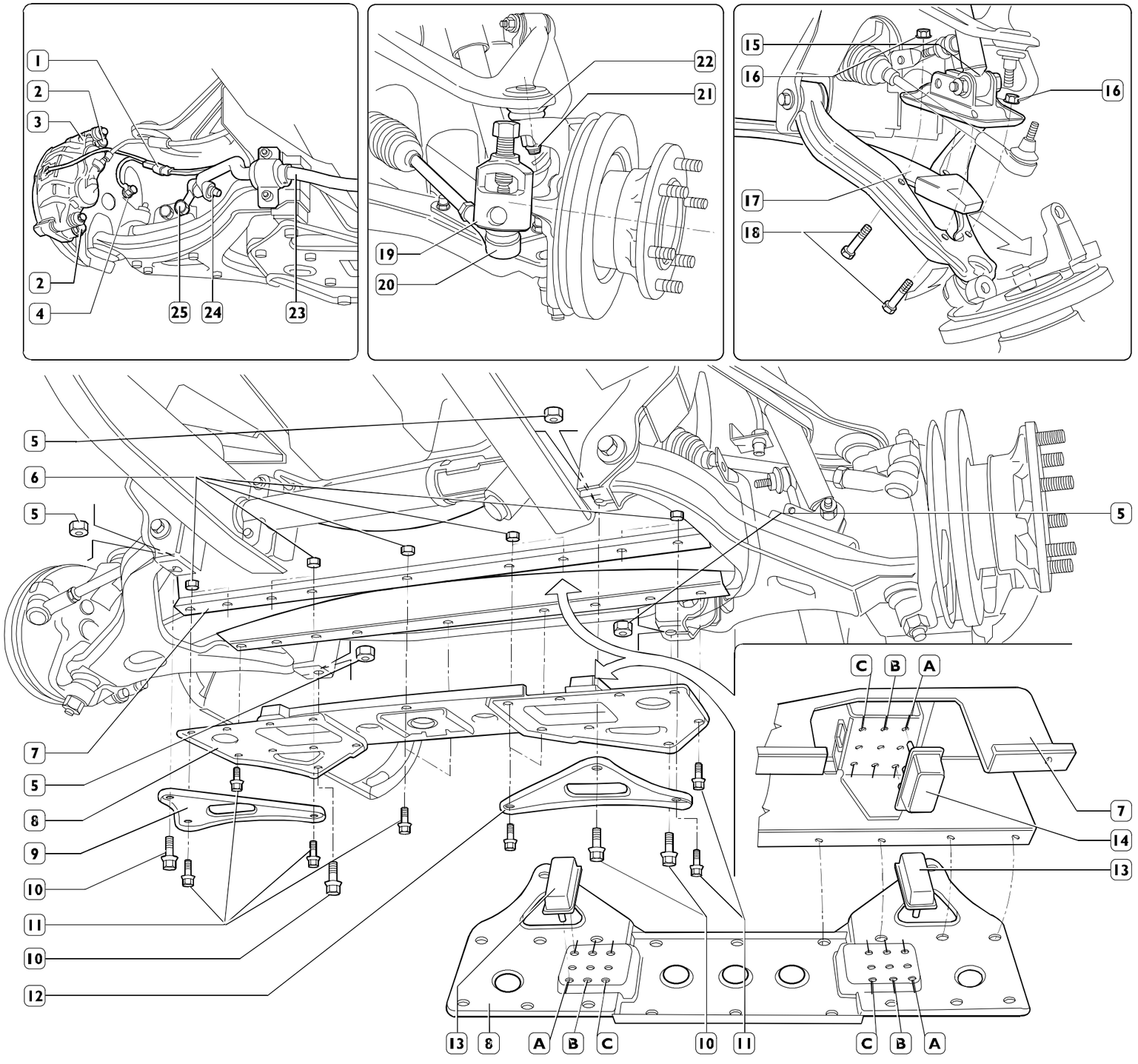

Refitting

Carry out the operations described for removal in reverse order, but you must take the following precautions:

- ❑ fit the top flexible plugs (2) in the cross member (1) at the position found during disassembly;
- ❑ fit the flexible plugs (4) onto the ends of the new leaf spring (3);
- ❑ fit the leaf spring (3) into the cross member and support it with a hydraulic lift;
- ❑ with two lifts arranged under the stub axles, lift them together, checking that the flexible plugs (4) of the leaf spring (3) get correctly positioned in the honeycomb of the bottom suspension arms (5 and 8) and the centre line (⇒) of the leaf spring is aligned with the central holes (⇒) della traversa (1), of the cross member (1), max. error ±2 mm;
- ❑ then complete refitting by tightening the screws or nuts to the required torque;
- ❑ position the bottom flexible plugs (6) on the cover (7) at the position found during disassembly;
- ❑ mount the cover (7) and tighten the screws and nuts to the required torque.

The nylon self-locking nuts must be replaced with new ones every time they are taken down.

To block rotation of the pins of the swivel heads (9 - 10), insert a suitable Allen wrench into the hexagon sunk in it.

For axle 5817 tighten the nut (24) (Figure 16) fixing the link rod to a torque of 44 ± 9 Nm.

Figure 17

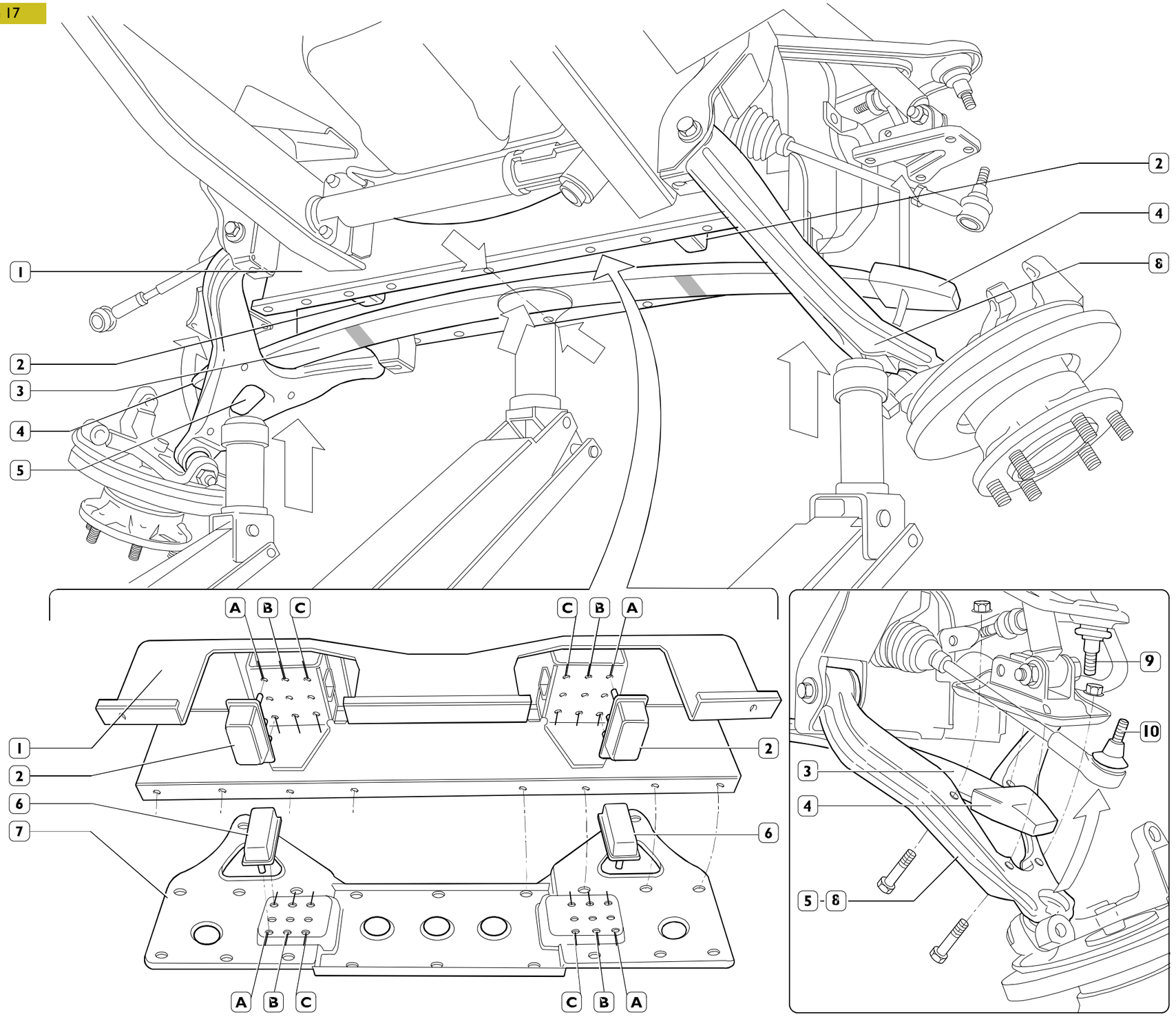

TORSION BAR SUSPENSION

(Axle 5819 - vehicles 35C - 40C - 45C - 50C)

Description

The torsion bar suspension is composed of:

- two bottom suspension arms.
- two top suspension arms;
- two longitudinal torsion bars;
- two hydraulic shock absorbers;
- two bottom reaction tie rods;
- two top reaction tie rods;
- a stabilizer bar;
- two rubber pads.

The longitudinal torsion bars are anchored at the front to the top suspension arms and at the rear to a mounting secured to the chassis frame.

The hydraulic shock absorbers are the double-acting telescopic type.

The side tie rods are mounted at the front to the chassis frame mounting by means of adjustable link pins, and at the rear to the transverse levers.

The purpose of the stabilizer bar, mounted on the bottom reaction screw stays, is to maintain the parallelism between the axis of the wheels and the chassis frame, cancelling any load unbalance on the wheels mounted on the same axle.

The purpose of the rubber pads fixed on the top mounting of the shock absorbers is to limit the upward movement of the suspension.

Figure 18

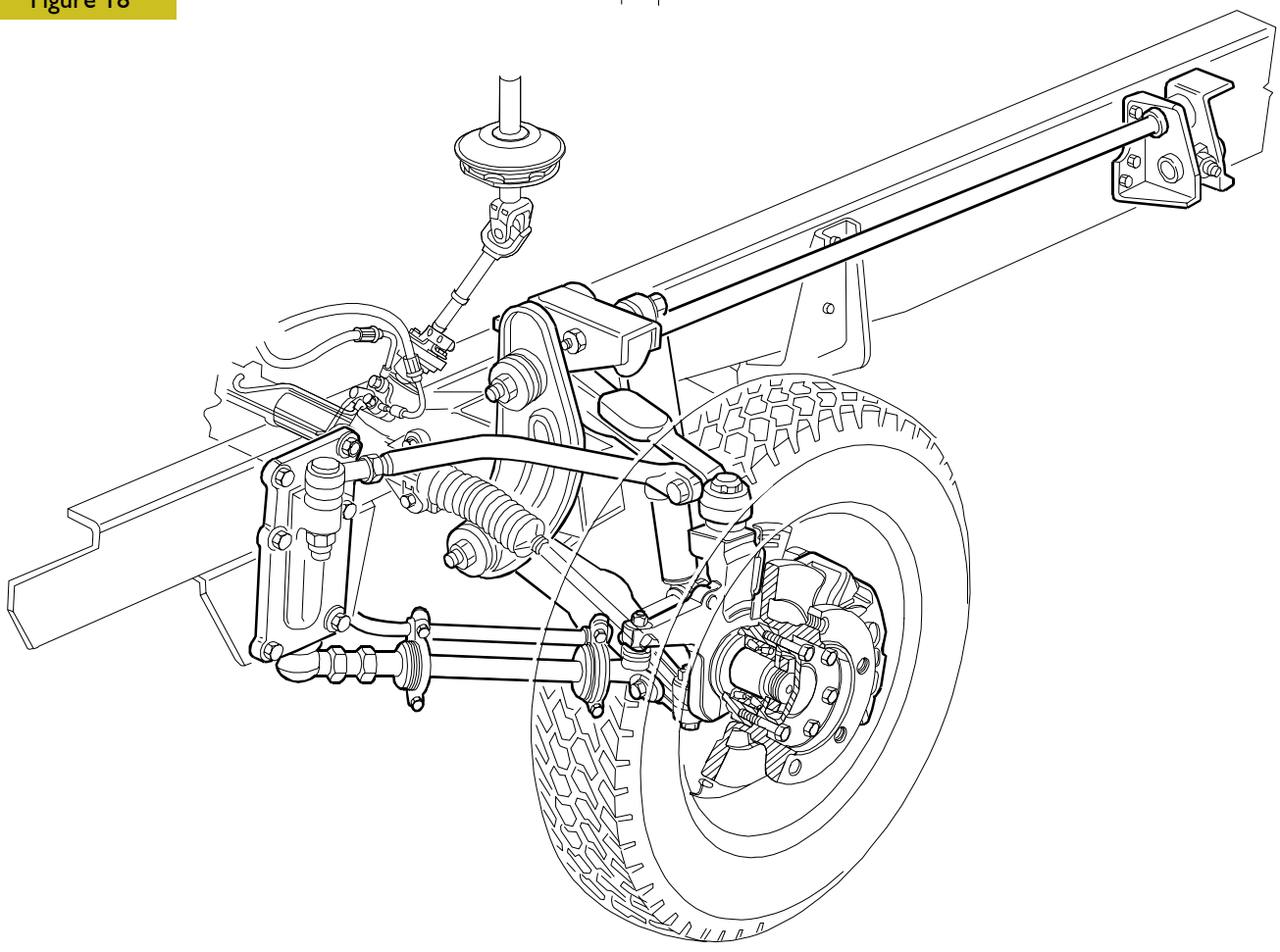

ASSEMBLY DRAWING OF FRONT TORSION BAR SUSPENSION

SPECIFICATIONS AND DATA

Torsion bar suspension with independent wheels, stabilizer bar and hydraulic shock absorbers		Models			
		35 C	40 C	45 C	50 C
Torsion bar diameter	mm	29			
Top tie rod adjustment distance		378 ± 0.8 mm 220 ± 0.5 mm			
Bottom tie rod adjustment distance		364.5 ± 0.7 mm 300.4 ± 0.6 mm			

Front shock absorbers

Models:		35 C - 40 C - 45 C - 50 C	
		Mannesmann - Sachs	Arvin Meritor
	Distance between centre of eyes:		
	Open mm	430 ± 3	444 ± 3 mm
	Closed mm	280 ± 3	286 ± 3 mm
	Stroke mm	150	158 mm

Stabilizer bar diameter

Models:		35 C - 40 C - 45 C - 50 C
Stabilizer bar diameter	mm	16

TOOLS

TOOL NO.		DESCRIPTION
99321024	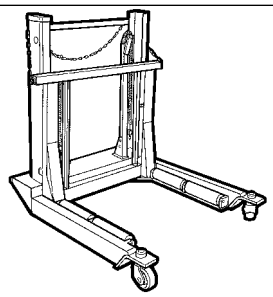	Hydraulic trolley for wheel removal - refitting
99347060	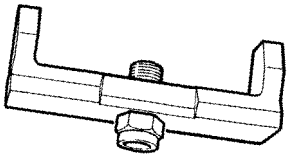	Extractor to take out tie rod link pins
99347074	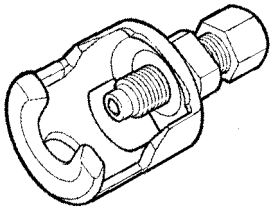	Extractor to take out steering tie rod link pins and suspension arms
99357144	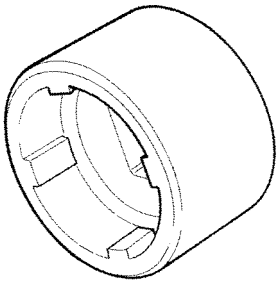	Wrench for ring nut securing link pins
99374241	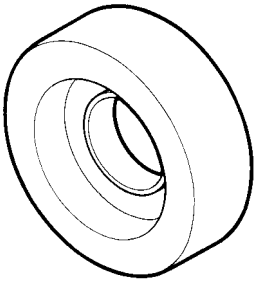	Tool for disassembling and reassembling front suspension flexible bushings

TIGHTENING TORQUES
Vehicles 35 C - 40 C - 45 C - 50 C

Figure 19

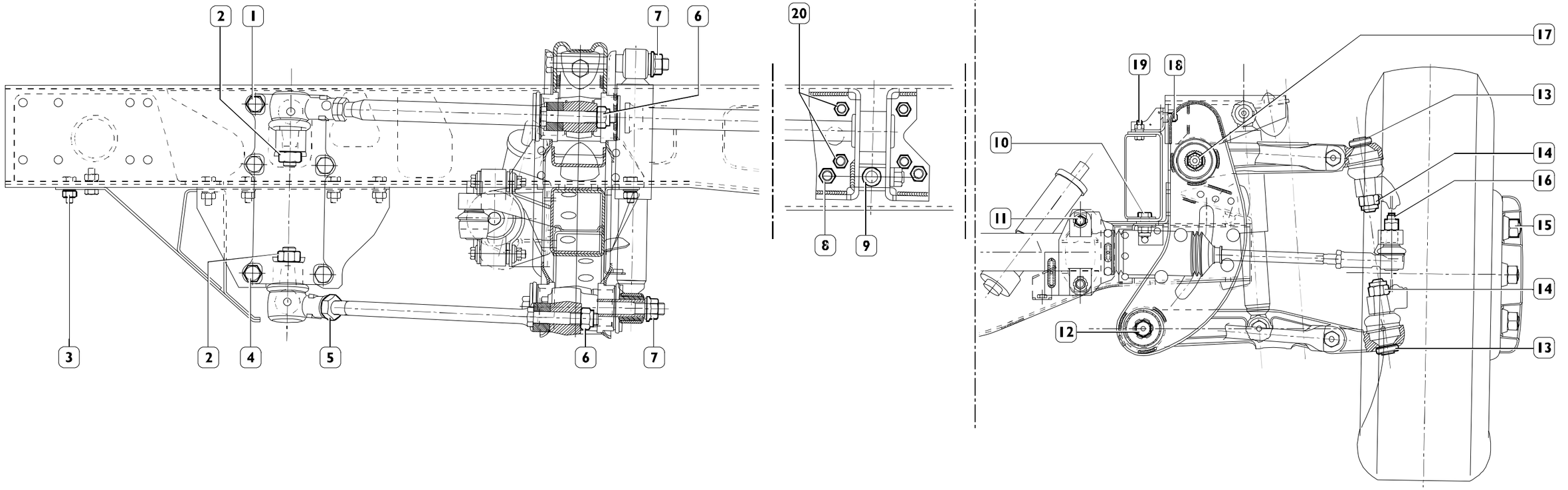

62103

	DESCRIPTION	TORQUE	
		Nm	kgm
1	Nut, reaction rod mounting upper fastening to chassis fixing screw	126 ÷ 154	12.8 ÷ 15.7
2	Nut, reaction rod ball joint to mounting	98 ÷ 137	10 ÷ 14
3	Nut, reaction rod and knckle joint stiffener to chassis fixing screw	33 ÷ 49	3.4 ÷ 5.0
4	Nut for screw fixing cross member to reaction rod support	126 ÷ 154	12.8 ÷ 15.7
5	Nut, ball joint to upper tie rod	98 ÷ 137	10 ÷ 14
6	Nut, upper tie rod to upper arm fastening screw	150 ÷ 183	15.3 ÷ 18.7
7	Nut, shock absorber upper and lower fastening screw	116 ÷ 142	11.8 ÷ 14.5
8	Nut, lower bracket fastening screw suspension adjustment unit	151 ÷ 184	15.4 ÷ 18.8
9	Nut, torsion bar adjusting lever pin	254 ÷ 311	25.9 ÷ 31.7
10	Nut, cross member to chassis side member lower wing fixing screw	72 ÷ 88	7.3 ÷ 9
11	Nut for steering box fixing screw	50 ÷ 61	5 ÷ 6.1
12	Nut, lower arms to cross member anchoring screw	206 ÷ 252	21.0 ÷ 25.7

	DESCRIPTION	TORQUE	
		Nm	kgm
13	Ring nut, ball joint to upper/lower arms	83 ÷ 152	8.5 ÷ 15.5
14	Nut, ball joint to steering knuckle	157 ÷ 177	16 ÷ 18
15	Nut, fixing will	335 ÷ 410	34 ÷ 41.8
16	Nut fixing steering box rod ball joint to stub axle lever	68 ÷ 83	6.8 ÷ 8.3
17	Hexagonal-head slotted nut, torsion bar to supension arm	84 ÷ 103	8.5 ÷ 10.5
18	Nut, cross member upper fastening to bracket on chassis side member upper wing fixing screw	47 ÷ 58	4.8 ÷ 5.9
19	Nut, cross member upper anchoring bracket to chassis side member upper wing fixing screw	18 ÷ 22	1.8 ÷ 2.2
20	Nut, upper and intermediate bracket fastening screw (suspension adjustment unit)	94 ÷ 115	9.6 ÷ 11.7
-	Screw for nut fixing front tubular cross member to side members	42 ÷ 51	4.2 ÷ 5.2
-	Nut, stabilizer bar clamps fixing screw	18 ÷ 22	1.8 ÷ 2.2
-	Rubber plug nut	68 ÷ 83	6.9 ÷ 8.5

REPAIRS

500760 OVERHAULING THE SUSPENSION TIE RODS

Removal

Figure 20

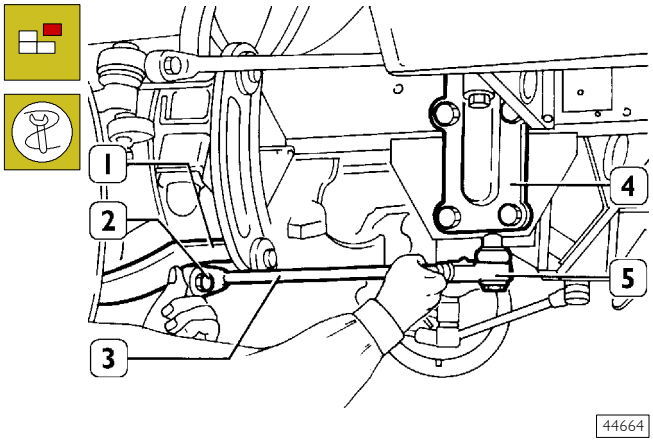

Remove the stabilizer bar as described under the relevant heading (operation 528030).

Take out the nut for the screw (2) securing the tie rod (3) to the bottom suspension arm (1) and remove the screw (2) from this.

Take out the nut securing the link pin (5) to the mounting (4). Using the extractor 99347060, remove the swivel head (5) from the mounting (4).

Figure 21

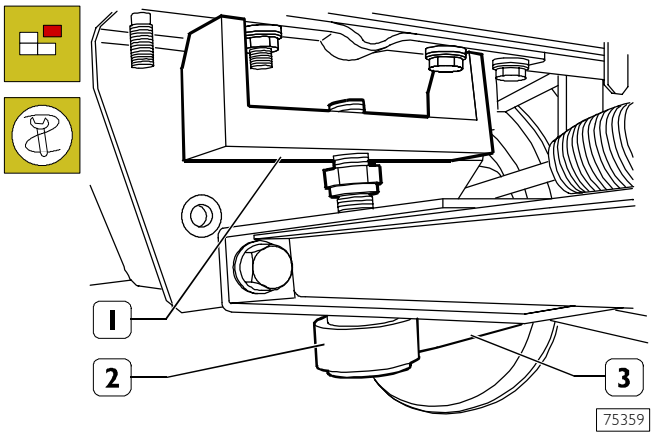

Using the extractor 99347060 (1), detach the stub axle (2) from the mounting (4) Figure 18.
Remove the screw stay (3) from the vehicle.

Figure 22

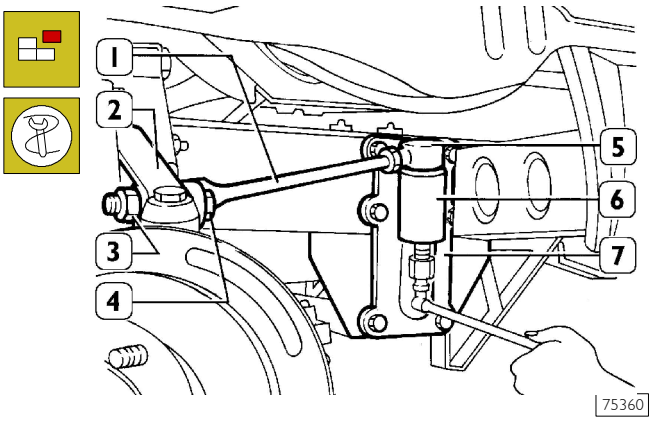

Take out the nut (3) for the screw (4) securing the tie rod (1) to the top suspension arm (2) and remove the screw (4) from this. Take out the nut securing the link pin (5) to the mounting (7). Using the extractor 99347074 (6), remove the swivel head (5) from the mounting (7). Remove the screw stay (1) from the vehicle.

If removing the mounting (7), so as not to change the wheel geometry, not the number and thickness of the spacers (if there are any) under the mounting to mount them in the same way when refitting the mounting (7).

500764 Replacing swivel heads

Figure 23

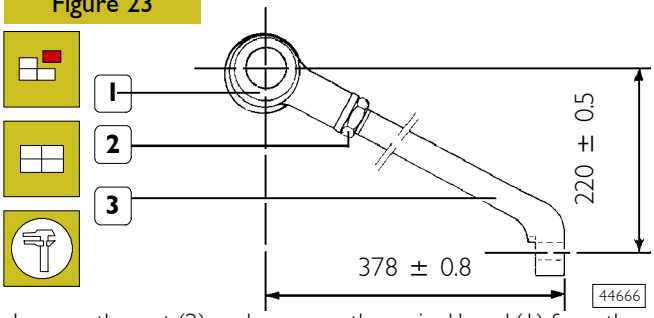

Loosen the nut (2) and unscrew the swivel head (1) from the top tie rod (3).
Screw the new swivel head (1) onto the tie rod (3) positioning it at the values shown in the figure.

Figure 24

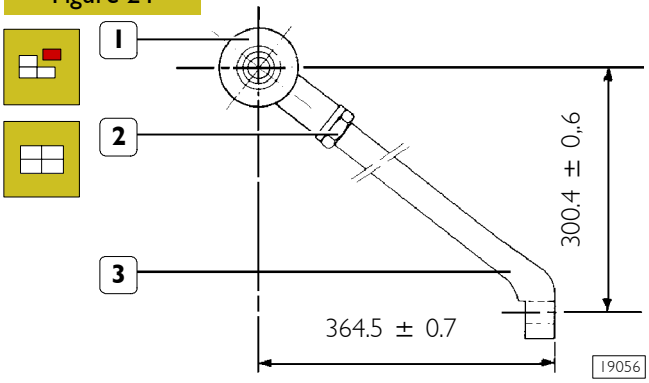

Loosen the nut (2) and unscrew the swivel head (1) from the bottom tie rod (3).
Screw the new swivel head (1) onto the tie rod (3) positioning it at the values shown in the figure.
Tighten the nut (2) to the prescribed torque.

Refitting

Figure 25

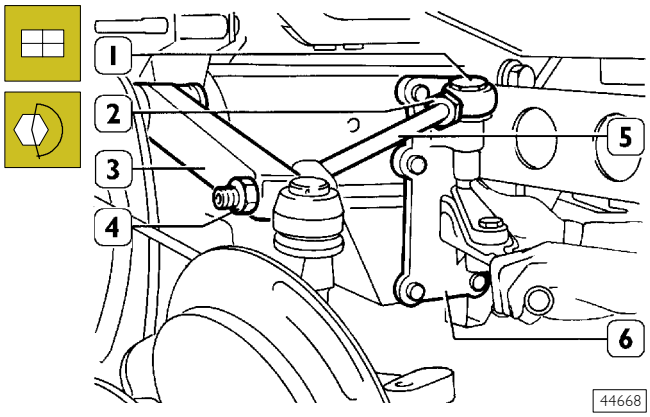

Refit the top tie rod (5) to the top suspension arm (3) and to the mounting (6).
Tighten the nut securing the link pin (1) to the required torque.

The nut (4) for the screw securing the tie rod (5) to the lever (3) must be tightened when the load of the empty vehicle weighs on the suspension.

Figure 26

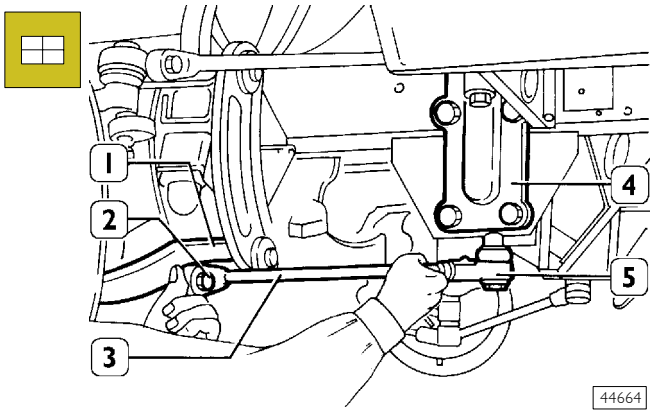

Refit the bottom tie rod (3) to the bottom suspension arm (1) and to the mounting (4).
Tighten the nut securing the link pin (5) to the required torque.

The nut (2) for the screw securing the tie rod (3) to the bottom lever must be tightened when the load of the empty vehicle weighs on the suspension.

Re-fit the stabilizer bar.

At the end of the re-fitting check the wheels geometry as described in the relevant paragraph.

Then tighten the nuts, which fasten the articulated head to the relevant tie-rods, to the prescribed torque.

500666 TORSION BARS

Removal

Remove the lower and upper tie-rods as described in the relevant paragraph (operation 500761) and go on as follows:

Figure 27

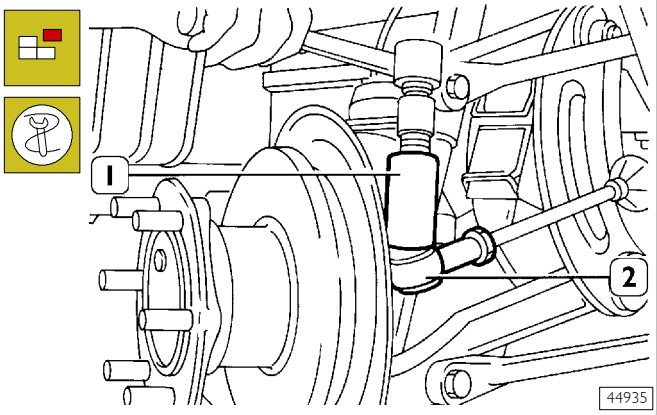

Remove the nut which fastens the articulated head (2) of the gearbox tie-rod to the steering knuckle; with the puller No. 99347074 (1) remove the articulated head (2).

Figure 28

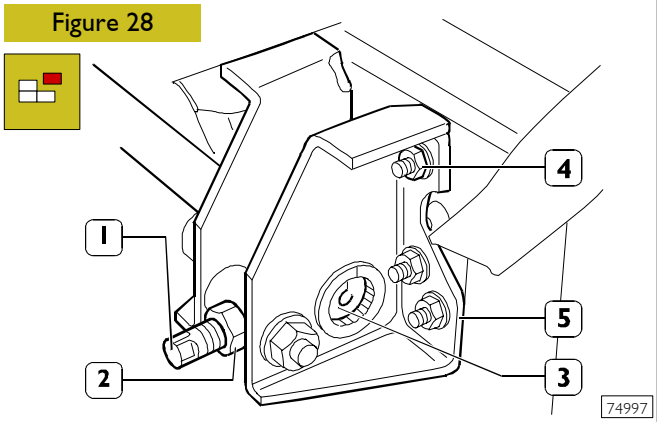

Loosen the nut (2) and unscrew the threaded pin (1) until the torsion bar (3) is fully "unloaded".
Take out the nuts (4) for the screws securing the mounting (5) to the chassis frame.
Remove the mounting (5) from the torsion bar (3).

Figure 29

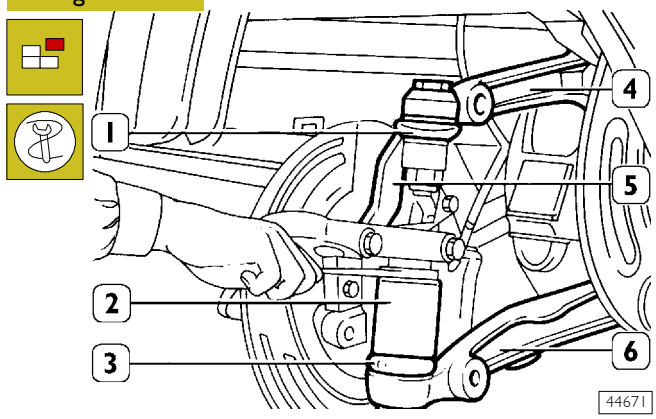

Remove the nuts securing the link pins (1) from the top (4) and bottom (6) suspension arms to the stub axle (5).
Support in an appropriate way the steering knuckle (5) together with brake caliper and wheel hub and with the tool No. 99347074 (2) remove the steering knuckle (5) from the levers (4 and 6).
Place the steering knuckle (5) on a support without straining the brake fluid hose and the electrical wires.

Figure 30

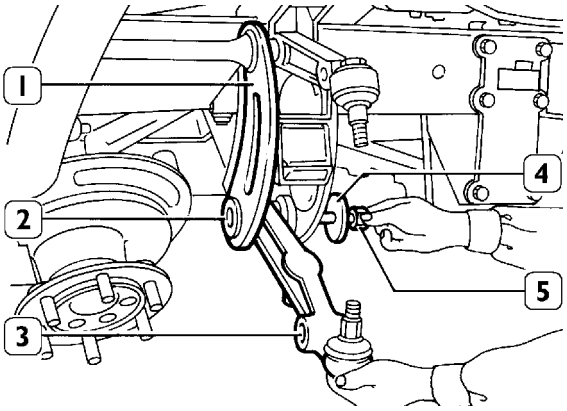

Take out the nut (5), remove the screw (4) and recover the two washers.

Disconnect the bottom suspension arm (3) from the cross member (1) extracting the bushing (2).

Figure 31

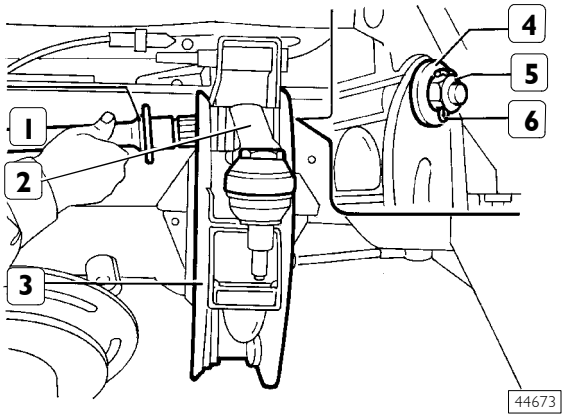

Remove the split pin (6), the nut (5) and the washer (4).

Disconnect the top suspension arm (2) from the cross member (3) extracting the torsion bar (1).

Replacing silentbloc and limit stops

Figure 32

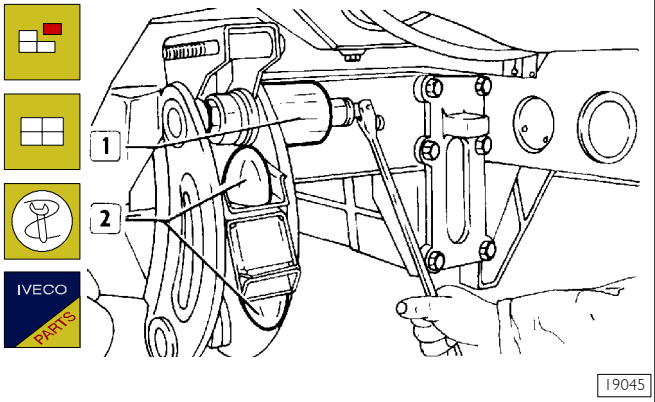

Silentbloc is replaced using tool 99374241 (1); the limit stops (2) are replaced with general tools.

Replacing link pins

Figure 33

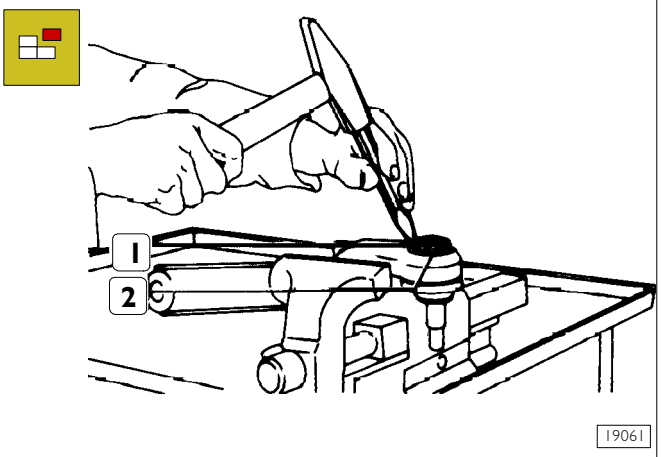

Straighten the safety lock (1) of the ring nut (2).

Figure 34

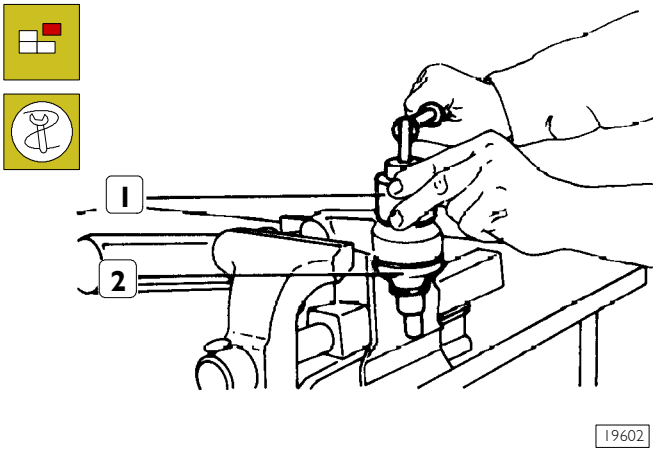

Using tool 99357144 (1) loosen the ring nut and extract the link pin (2) from the suspension arm.

Figure 35

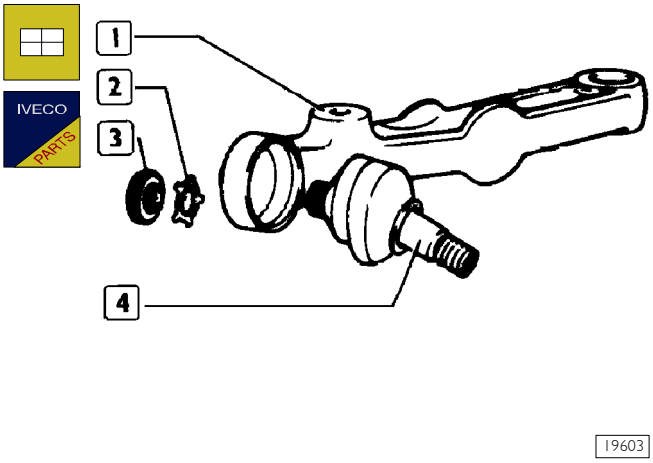

Mount the new link pin (4) on the top and bottom suspension arm (1).

Loosen the ring nut (3) with its safety lock (2).

Figure 36

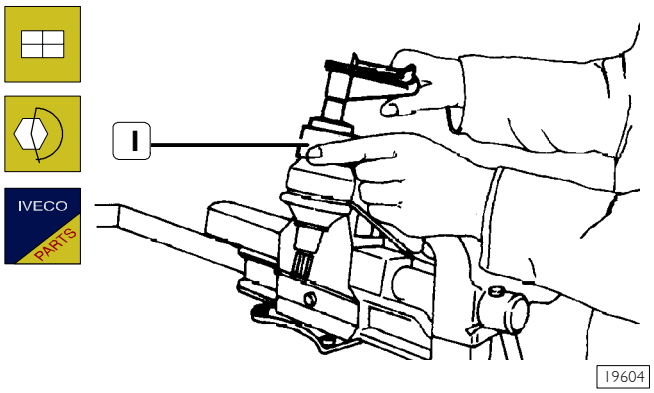

With the tool No. 99357144 (1) fasten the ring nut (3, Figure 35) to the prescribed torque.

Figure 37

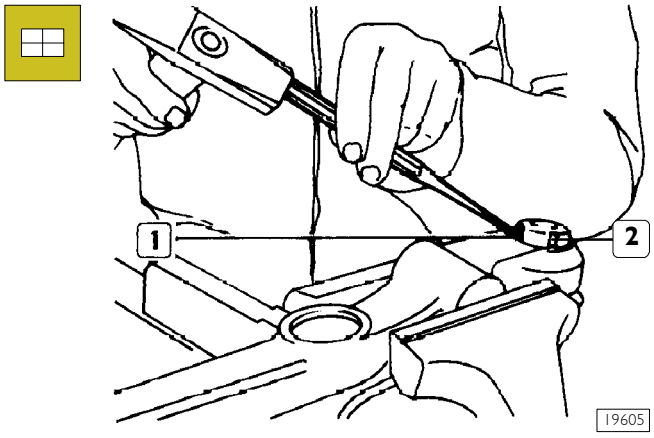

Bend a tongue of the safety lock (1) in the slot of the ring nut (2).

Refitting

Figure 38

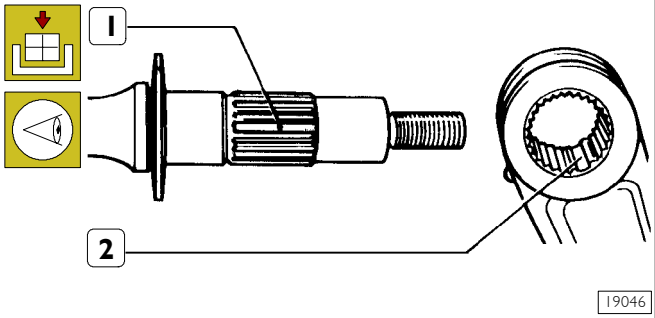

The letters AD - AS, printed in the back of torsion bars, indicate respectively the right bar and the left one.

Moreover the splined part has a double tooth (1) which, at the reassembly, must correspond to the double spline (2) of the upper lever.

Figure 39

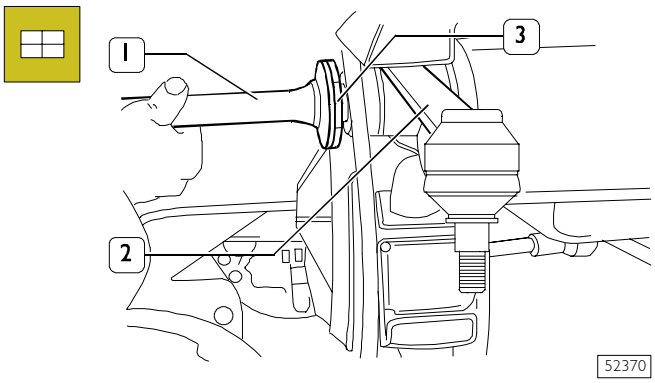

Position the top suspension arm (2) in the cross member. Then insert the torsion bar (1), with the washer (3), in the cross member and in the suspension arm.

Figure 40

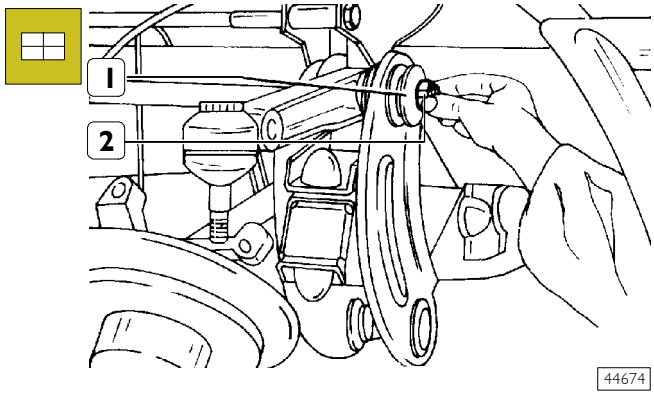

Place the washer (1) and screw the nut (2) without tightening it.

Figure 41

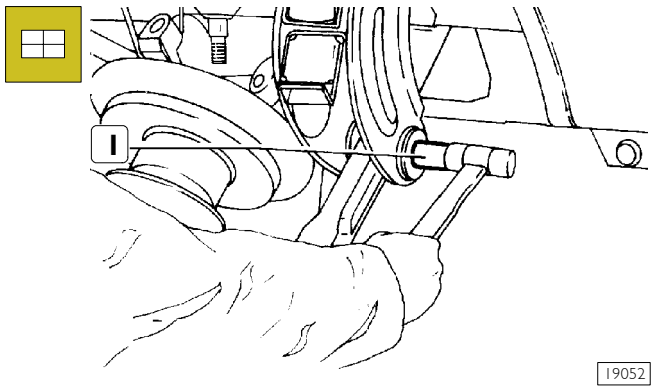

Position the bottom suspension arm in the cross member and insert the bushing (1).

Insert the screw with its washers and screw the nut without tightening it.

Figure 42

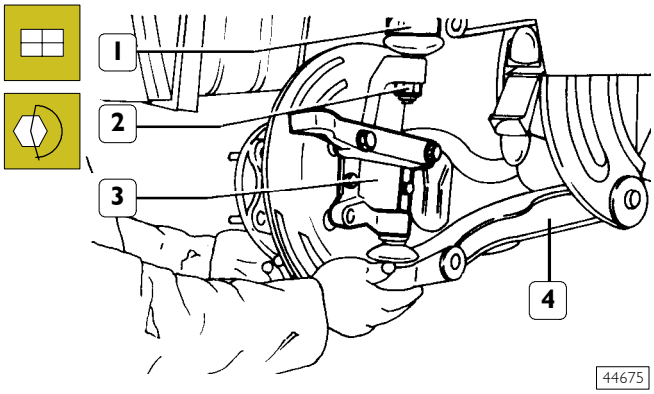

Connect the stub axle (3) to the link pins of the top (1) and bottom (4) suspension arms. Tighten the fixing nuts (2) to the required torque.

Figure 43

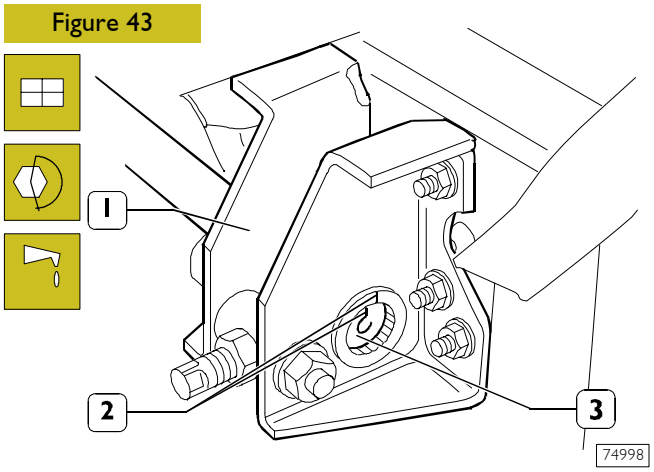

Lubricate the grooved portion of the torsion bar (3).

Assemble the torsion bar (3) and the support (1) so that the splines (2) of the toothed bush and of the torsion bar coincide.

Fix the support (1) to the chassis tightening the fastening screw nuts to the prescribed torque.

Figure 44

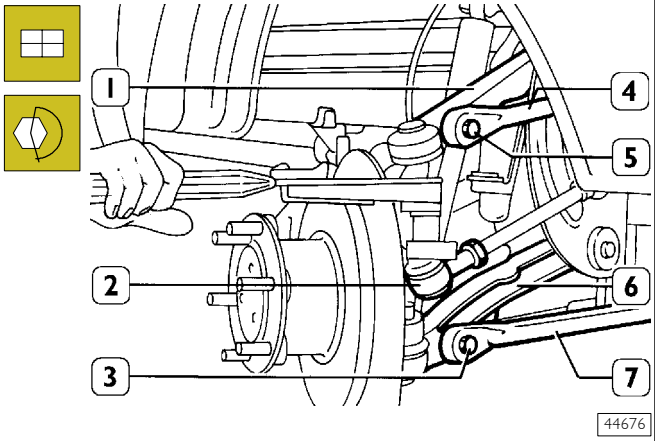

Refit the tie rods (4 and 7) to the suspension arms (1 and 6) without tightening the nuts for the screws (3 and 5) to their torque; connect the link pin (2) of the steering gear housing tie rod to the lever of the stub axle and tighten the nut to the required torque.

Figure 45

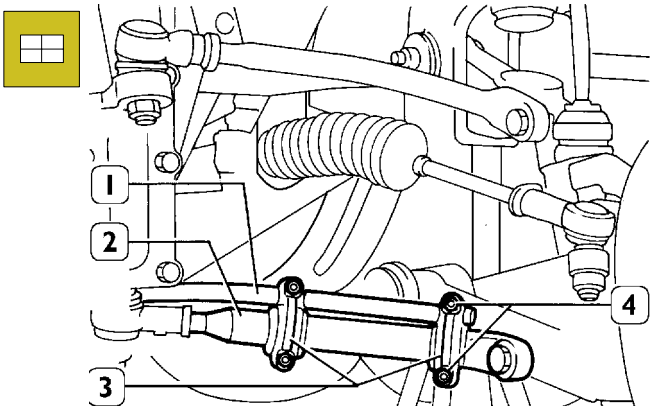

Fit the stabilizer bar (1) back onto the bottom screw stays (2) with the clamps (3), taking care that the screws (4) go into the slots in the stabilizer bar.

Complete fitting the suspension back on by mounting the shock absorber.

Figure 46

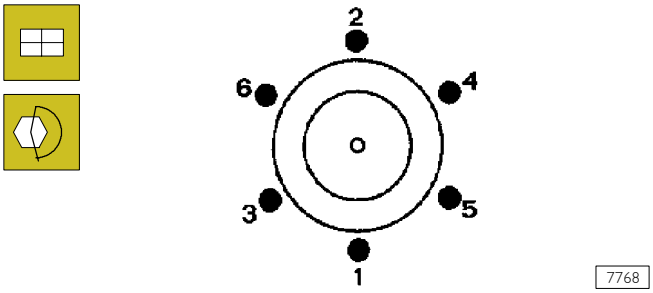

Refit the wheels, mount the nut guard and screw on the fixing nuts; lower the vehicle, removing the stands..

Following the order shown in the figure, tighten the fixing nuts to the required torque.

Then tighten the torsion bar fixing nuts to the required torque and mount the safety split pins on them.

Tighten the nuts for the screws securing the top and bottom tie rods to their respective levers to the required torque.

Adjusting torsion bar pre-load

Figure 47

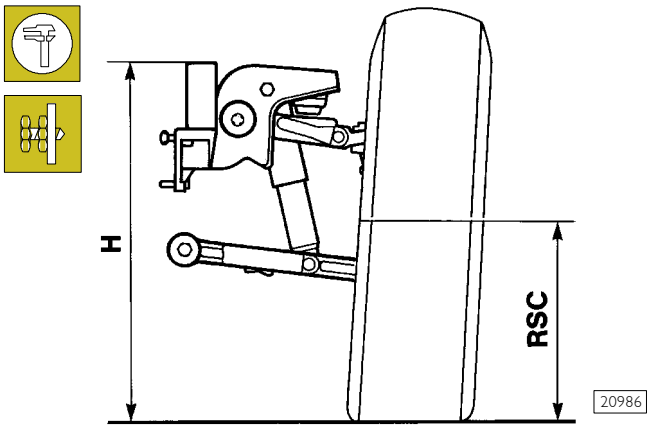

TORSION BAR PRE-LOADING CONTROL DIAGRAM
H = mm, distance from ground of the side frame upper thread, measured as near as possible the suspension connecting area

RSC = mm, loaded wheel radius

Ensure that the wheel pressure complies with the prescribed one and check, with the suitable gauge, that the thread depth of tyres is more or less the same on both wheels.

Measure on both sides of the vehicle, the distance from ground (H) of the side frame upper thread, measured as near as possible the suspension connecting area.

The height H must correspond to the value given in the table below.

Figure 48

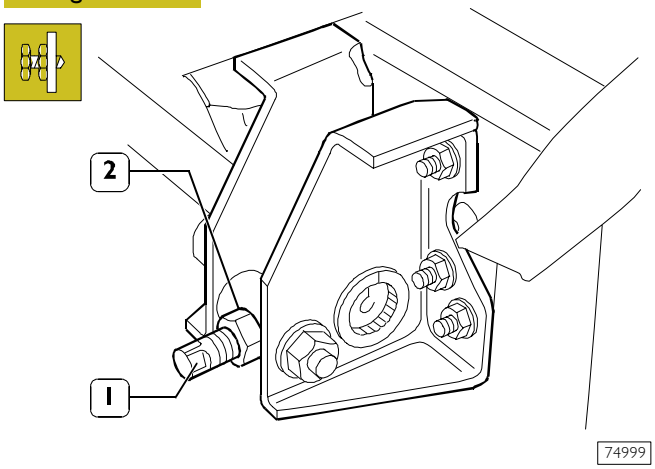

If the value is different, act on the adjusting screw (1) as much as you need it, but remember that, before acting on the screw, it is necessary, to lift the vehicle with the hydraulic jack, so that the wheels are lifted from the ground. This is necessary if you do not want to damage the screw.

Once the vehicle has reached the right position, lock the screw with the lock nut (2).

HEIGHT OFF GROUND (H in millimetres) OF THE TOP EDGE OF THE CHASSIS FRAME IN RELATION TO THE WEIGHT FOR MODELS 35C/40C/45C/50C WITH TORSION BAR DIAMETER 29 mm.

Weight on the front wheels (Kg)	Tyres	
	195/75 R 16	**6. 50 R 16**
1200	610	629
1220	608	627
1240	606	625
1260	604	623
1280	603	622
1300	601	620
1320	599	618
1340	597	616
1360	596	615
1380	594	613
1400	592	611
1450	588	607
1500	584	602
1550	579	598
1600	575	593
1650	571	589
1700	566	585
1750	562	580
1800	558	576
1850	553	571
1900	549	567

528030 STABILIZER BAR

Removal

Figure 49

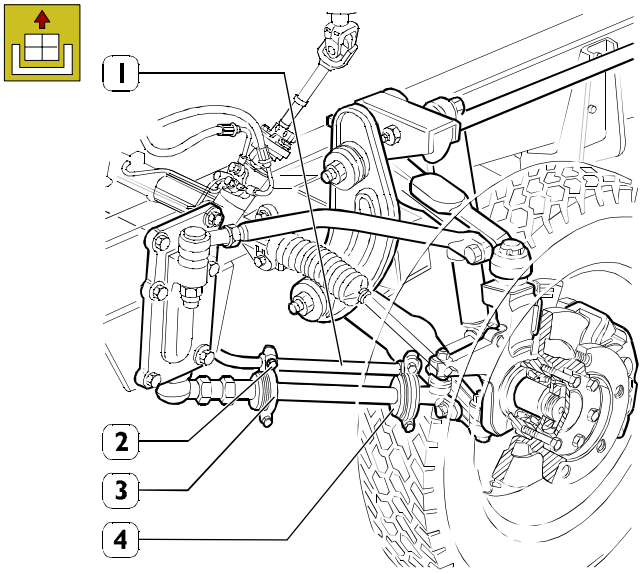

FRONT STABILISER BAR
Vehicles 35C - 40C - 45C - 50C

Unscrew the screws (2) fixing the half-brackets (3) and remove the stabilizer bar (1) from the vehicle, recovering the rubber plugs (4).

Check that the bushings and/or elastic elements are not worn or deteriorated; if they are, replace the relevant part.

Refitting

To fit it back on, perform the steps carried out for removal in reverse order, keeping to the prescribed tightening torques.

500910 FRONT SHOCK ABSORBERS

Removal

Figure 50

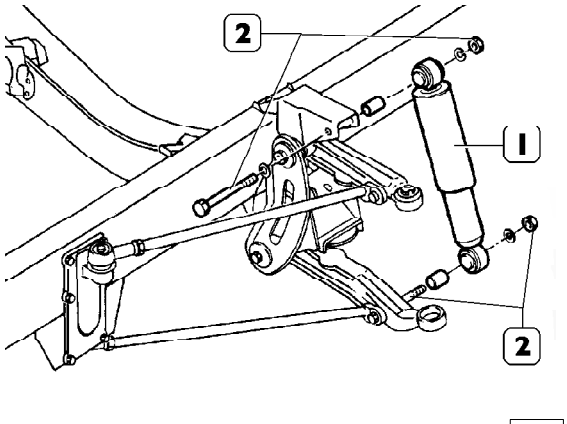

FRONT SHOCK ABSORBER
Vehicles 35C - 40C - 45C - 50C

Set the vehicle on level ground.
Lock the rear wheels with scotches, remove the wheel rim guards and loosen the screws or nuts fixing the wheel.
Lift the front of the vehicle and rest the chassis frame on supports.
Take out the screws or nuts fixing the wheel and remove them with tool 99321024.
Unscrew the top and bottom bolts (2), then remove the shock absorbers (1) from the vehicle.

Check that the bushings and/or elastic elements are not worn or deteriorated; if they are, replace the relevant part.

Using a suitable instrument, check the efficiency of the shock absorbers.

Refitting

To fit it back on, perform the steps carried out for removal in reverse order, keeping to the prescribed tightening torques.

TORSION BAR SUSPENSION

(Axle 5823 - vehicles 60C - 65C)

Description

The torsion bar suspension is composed of:

- ❑ two bottom suspension arms;
- ❑ two top suspension arms;
- ❑ two longitudinal torsion bars;
- ❑ two hydraulic shock absorbers;
- ❑ two bottom reaction tie rods;
- ❑ two top reaction tie rods;
- ❑ a stabilizer bar;
- ❑ two rubber pads.

The longitudinal torsion bars are anchored at the front to the top suspension arms and at the rear to a mounting secured to the chassis frame.

The hydraulic shock absorbers are the double-acting telescopic type.

The side tie rods are mounted at the front to the chassis frame mounting by means of adjustable link pins, and at the rear to the transverse levers.

The purpose of the stabilizer bar, mounted on the bottom reaction screw stays, is to maintain the parallelism between the axis of the wheels and the chassis frame, cancelling any load unbalance on the wheels mounted on the same axle.

The purpose of the rubber pads fixed on the top mounting of the shock absorbers is to limit the upward movement of the suspension.

Figure 51

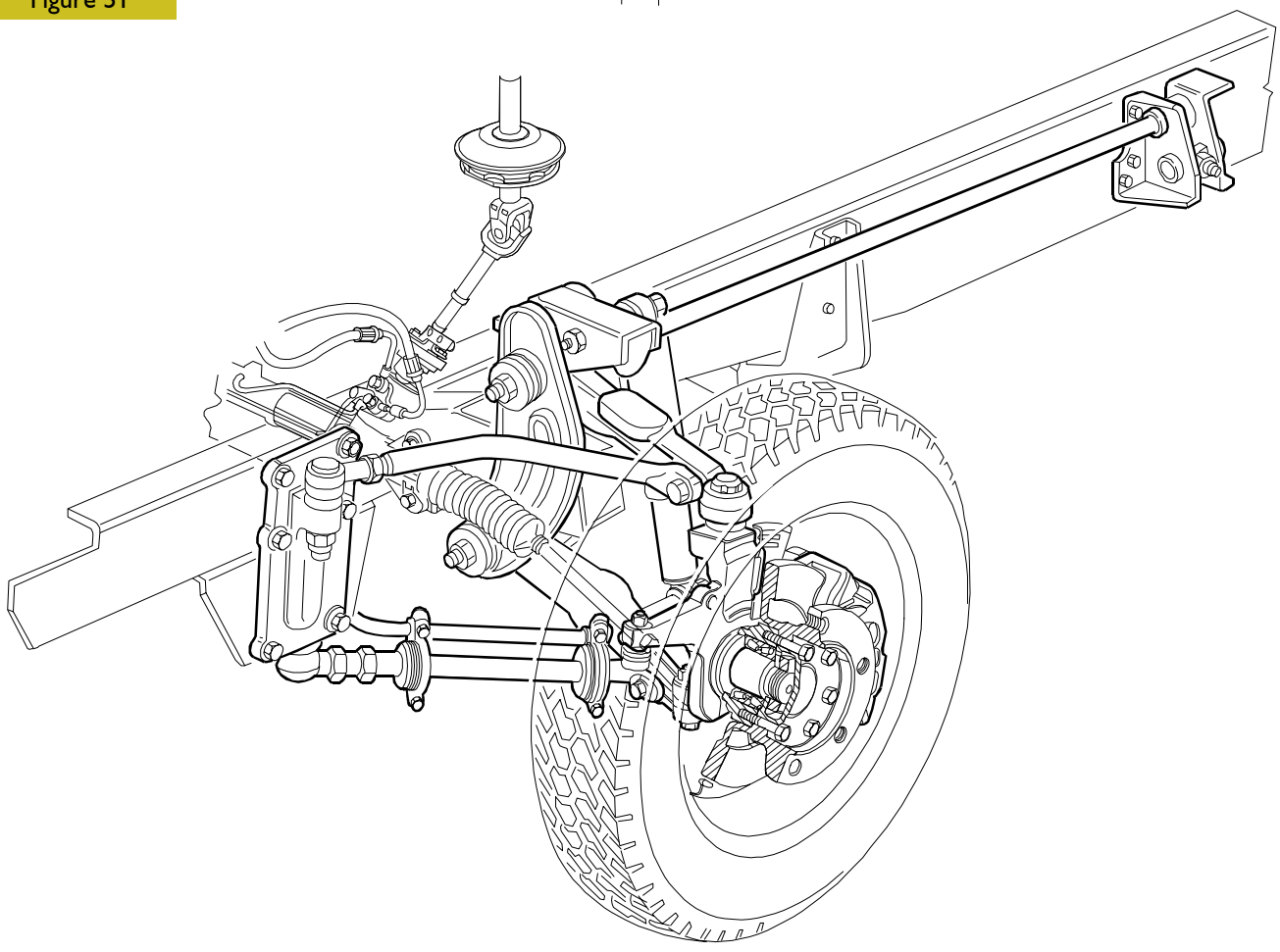

ASSEMBLY DRAWING OF FRONT TORSION BAR SUSPENSION

SPECIFICATIONS AND DATA

Torsion bar suspension with independent wheels, stabilizer bar and hydraulic shock absorbers	Models
	60 C - 65 C
Torsion bar diameter mm	33
Top tie rod adjustment distance	378 ± 0.8 mm 220 ± 0.5 mm
Bottom tie rod adjustment distance	369 ± 0.5 mm 300.4 ± 0.5 mm
Lower linkage adjustment (for recently manufactured vehicles)	363.5 ± 0.5 mm 299 ± 0.5 mm

Front shock absorbers

Models:		60 C - 65 C	
		Mannesmann - Sachs	ARVIN
	Distance between centre of eyes:		
	Open mm	430 ± 3	400 ± 3 mm
	Closed mm	280 ± 3	280 ± 3 mm
	Stroke mm	150 ± 3	120 ± 3 mm

Stabilizer bar

Models:	60 C - 65 C					
	Twin cab	Truck Chassis Cabs	Cut Away	Vans	Chassis Cowls	Semi-Glazed
Stabilizer bar diameter mm	20			22		

TIGHTENING TORQUES

Figure 52

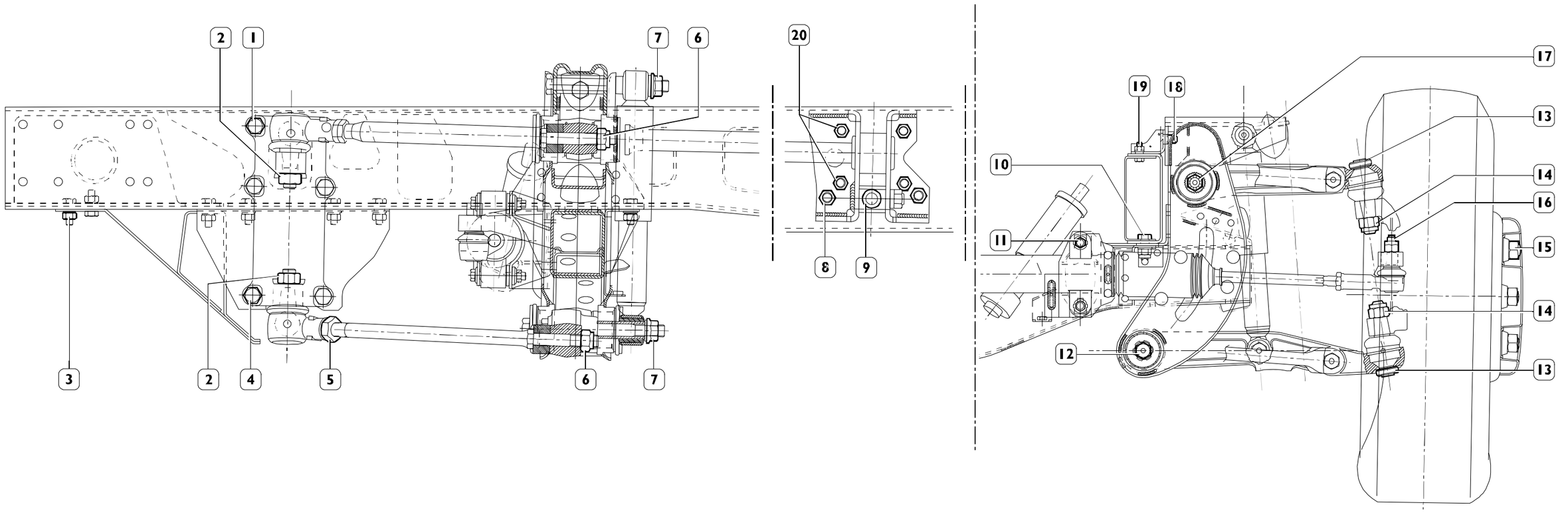

	DESCRIPTION	TORQUE	
		Nm	kgm
1	Nut, reaction rod mounting upper fastening to chassis fixing screw	140	14
2	Nut, reaction rod ball joint to mounting	98 ÷ 137	10 ÷ 14
3	Nut, reaction rod and knckle joint stiffener to chassis fixing screw	41	4.1
4	Nut for screw fixing cross member to reaction rod support	140	14
5	Nut, ball joint to upper tie rod	98 ÷ 137	10 ÷ 14
6	Nut, upper tie rod to upper arm fastening screw	150 ÷ 183	15.3 ÷ 18.7
7	Nut, shock absorber upper and lower fastening screw	116 ÷ 142	11.8 ÷ 14.5
8	Nut, lower bracket fastening screw suspension adjustment unit	151 ÷ 184	15.4 ÷ 18.8
9	Nut, torsion bar adjusting lever pin	197 ÷ 241	20 ÷ 24
10	Nut, cross member to chassis side member lower wing fixing screw	80	8
11	Nut for steering box fixing screw	50 ÷ 61	5.1 ÷ 6.2
12	Nut, lower arms to cross member anchoring screw	206 ÷ 252	21.0 ÷ 25.7

	DESCRIPTION	TORQUE	
		Nm	kgm
13	Ring nut, ball joint to upper/lower arms	83 ÷ 152	8.5 ÷ 15.5
14	Nut, ball joint to steering knuckle	157 ÷ 177	16 ÷ 18
15	Nut, fixing will	284.5 ÷ 343.3	28.4 ÷ 34.3
16	Nut fixing steering box rod ball joint to stub axle lever	83 ÷ 68	8.4 ÷ 6.9
17	Hexagonal-head slotted nut, torsion bar to supension arm	84 ÷ 103	8.6 ÷ 10.5
18	Nut, cross member upper fastening to bracket on chassis side member upper wing fixing screw	52.5	5.2
19	Nut, cross member upper anchoring bracket to chassis side member upper wing fixing screw	20	2
20	Nut, upper and intermediate bracket fastening screw (suspension adjustment unit)	104	10.4
-	Screw for nut fixing front tubular cross member to side members	42 ÷ 51	4.2 ÷ 5.2
-	Nut, stabilizer bar clamps fixing screw	24.5	2.4
-	Rubber plug nut	68 ÷ 83	6.9 ÷ 8.5

EQUIPMENT

TOOL No.		DESCRIPTION
99321024	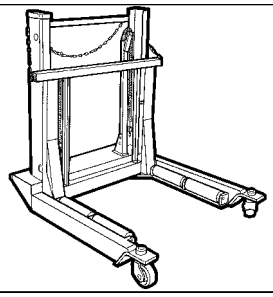	Hydraulic trolley for wheel removal and refitting
99347027	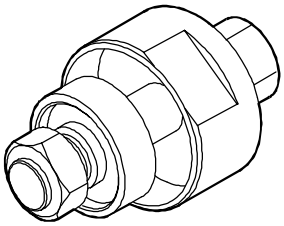	Tool for removing front suspension rubber bushes
99347060	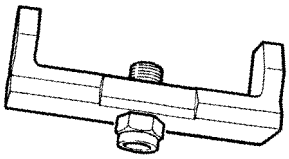	Extractor to take out link pins
99347074	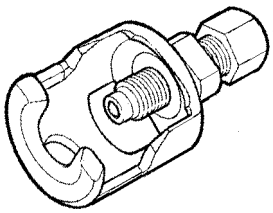	Extractor to take out link pins and suspension arms
99357144	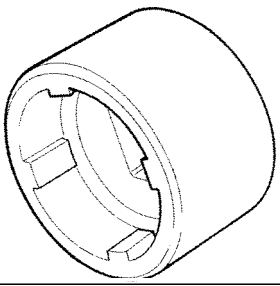	Tool for link pins fixing screw
99374166	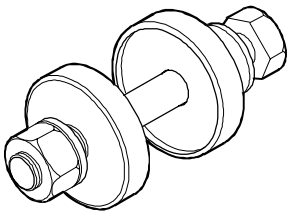	Tool for refitting front suspension rubber bushes

REPAIR OPERATIONS

500760 SUSPENSION OVERHAUL

It differs from suspension overhaul with torsion bars for vehicles: 35C, 40C, 45C, 50C for the following points.

500764 Lower tie rod articulated heads replacement

Figure 53

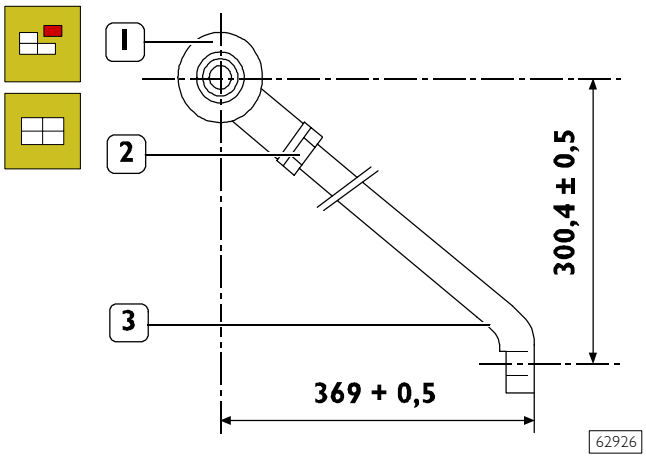

Loosen the nut (2) and unscrew the articulated head (1) from the upper tie rod (3).
Screw the new articulated head (1) on the tie rod (3). Position it according to the values show in the above figure.

500666 TORSION BARS
Removal

Figure 54

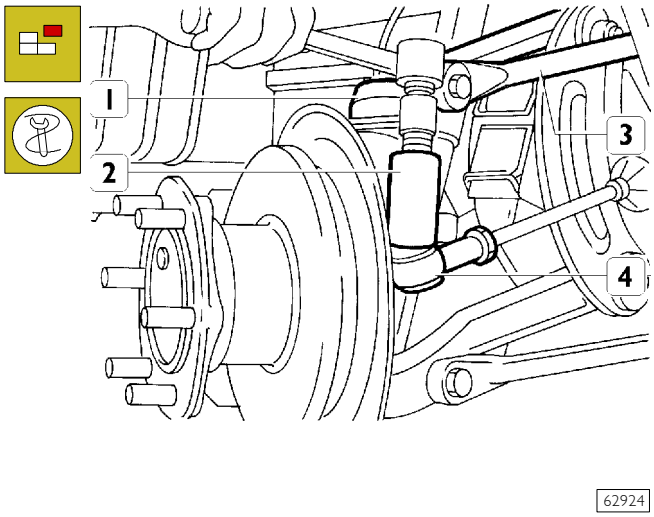

Remove the nut fastening the steering box tie rod kingpin (4) from stub axle lever; use puller 99347074 (2) to remove the kingpin (4).
Remove suspension lever (1) upper tie rod (3).

Figure 55

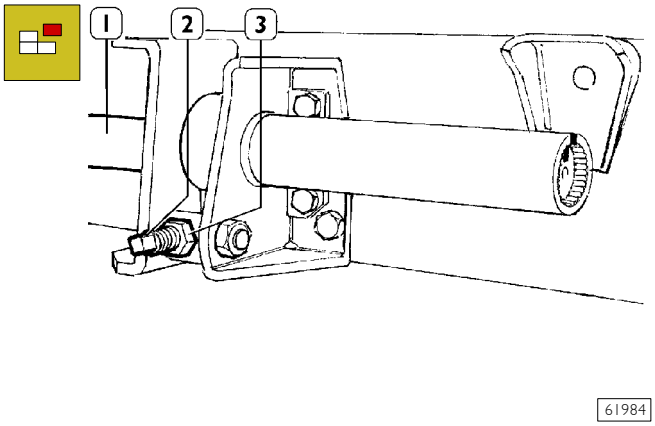

Loosen the nut (3) and loosen the threaded pin (2) until the torsion bar (1) is completely "released".

NOTE - Take note of the number of pin (2) threads above nut (3); these data shall provide the starting point to adjust the torsion bar after assembling.

For left torsion bar disconnect the fuel tank.

Figure 56

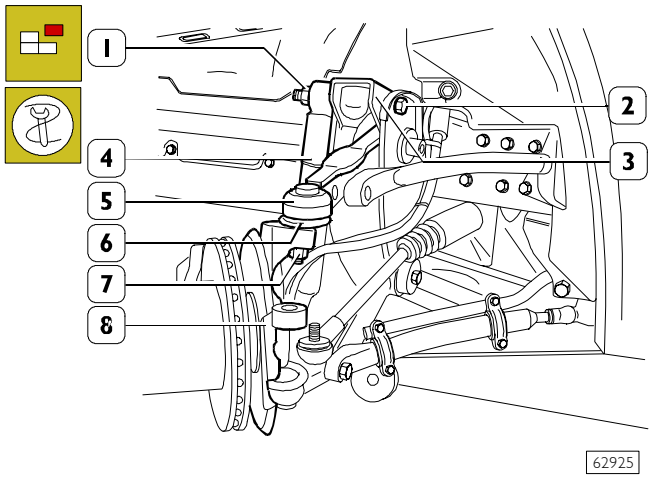

Remove the nut (2), withdraw the screw (3) and disconnect the shock absorber (4) from the upper support (1).

Remove the nut (7) fastening the articulated head (6) from the upper lever (5) to stub axle (8).

Suitably support the stub axle (8) including the brake calliper and the wheel hub and using tool 99347074 remove the lever (5) from the stub axle (8).

Rest the stub axle (8) on a proper stand to prevent brake fluid pipes and electric cables tensioning.

Figure 57

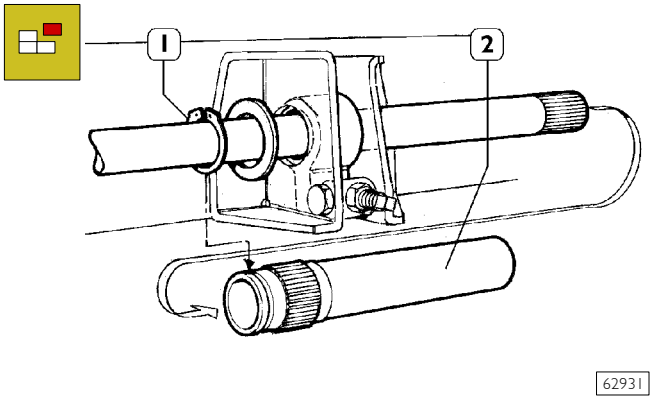

Remove the circlip (1) from the sleeve (2) and remove it.

Figure 58

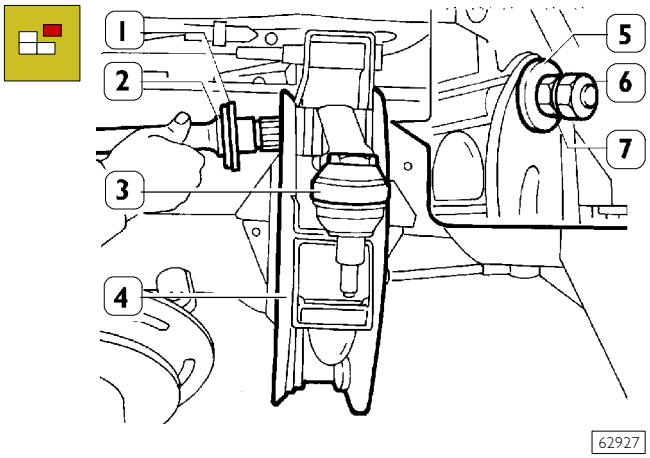

Remove the lock nut (6), the nut (7) and withdraw the washer (5).
Remove the torsion bar (2) with the washer (1) from the upper lever (3) and remove it from the bracket (4).

Figure 59

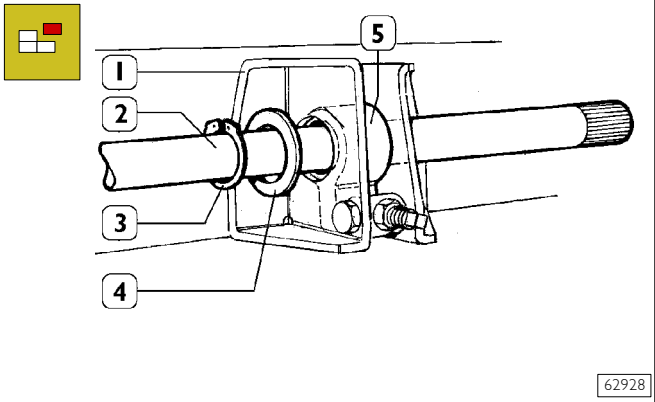

Remove the torsion bar (2) including the circlip (3) and the washer (4) from the adjustment lever (5) and remove it from the bracket (1).

Rubber bush replacement

Removal

Figure 60

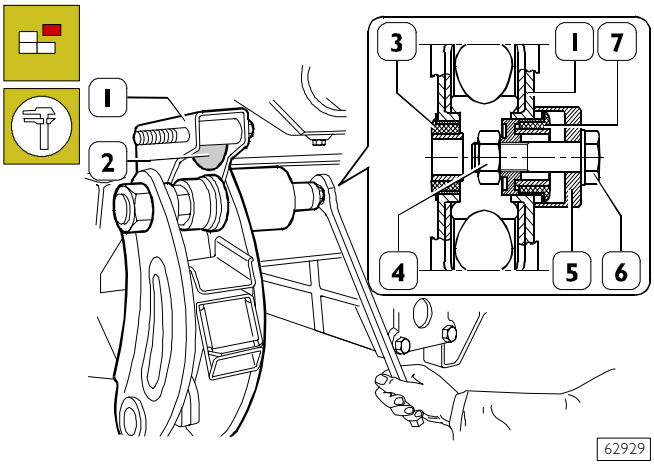

Apply tool 99347027 (5) as shown in the figure.

Hold the screw (6), tighten the nut (4) and remove the rubber bushes (3 and 7) from the cross member (1).

The rubber stop plug (2) is pressure-fitted to cross member (1) and no tool is required for its replacement.

Refitting

Figure 61

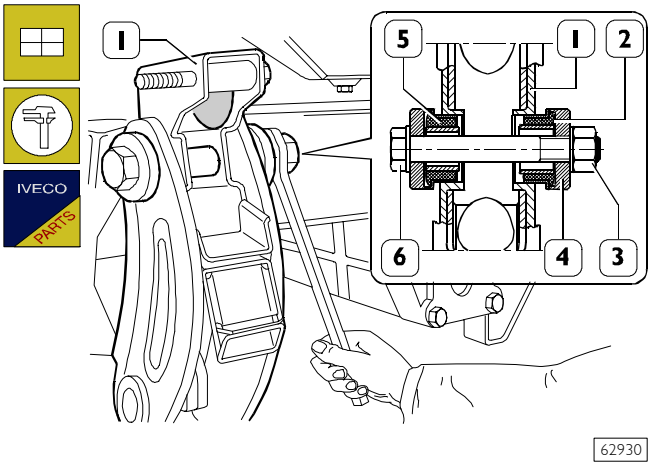

Position rubber bushes (2-5) in cross member (1).

Apply tool 99374166 (4) to bushes (2-5) as shown in the figure.

Hold the screw (6) and tighten the nut (3) until fitting in place the rubber bushes (2-5).

Figure 62

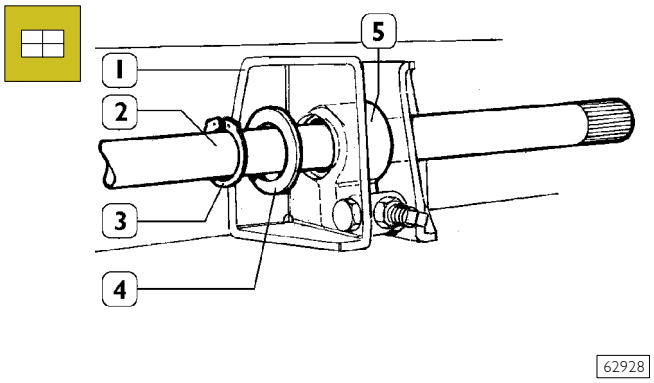

Set the adjustment lever (5) in the bracket (1) and insert the torsion bar (2) including the washer (4) and the circlip (3).

Figure 63

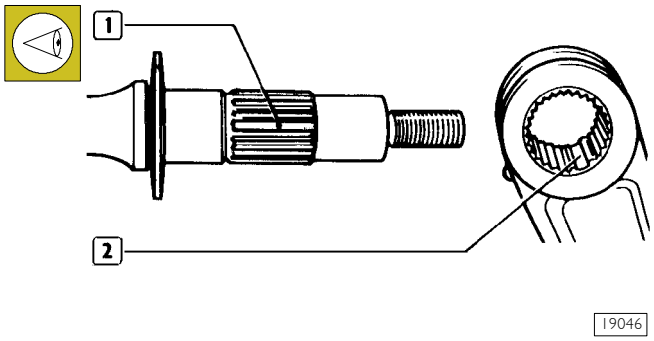

The rear part of the torsion bars is marked with AD-AS to identify respectively the right bar and the left bar.

The splined part is provided with a double tooth (1), that shall coincide at refitting with the double space (2) of the upper lever.

Figure 64

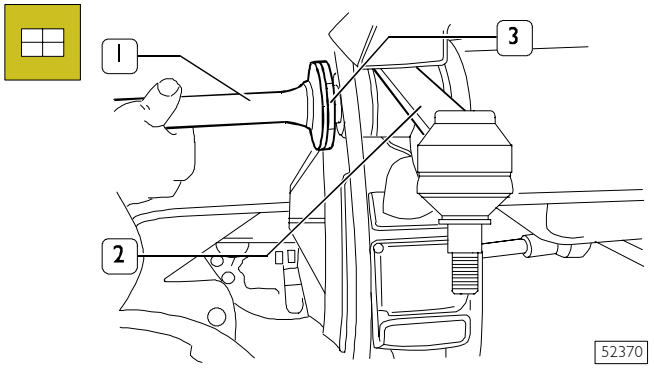

Set the upper lever (2) in the cross member, then insert the torsion bar (1), including the washer (3), into cross member and lever, making the double tooth coinciding with the double space of the lever.

Figure 65

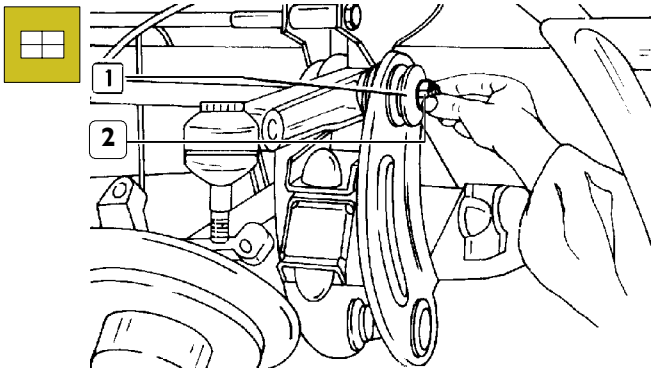

Set the washer (1) and screw the nut (2) without locking it.

Figure 66

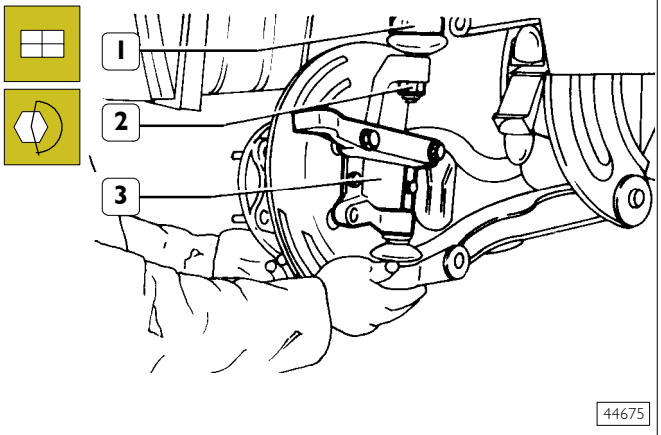

Connect the stub axle (3) to the upper lever (1) ball joint; tighten the fastening nut (2) to the specified torque.

Figure 67

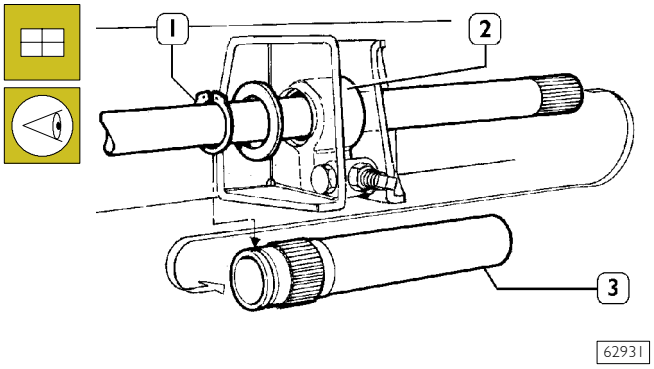

Fit the sleeve (3) on the torsion bar (1) and in the adjustment lever (2) so that the marks on these components coincide as shown in the following figure.

Figure 68

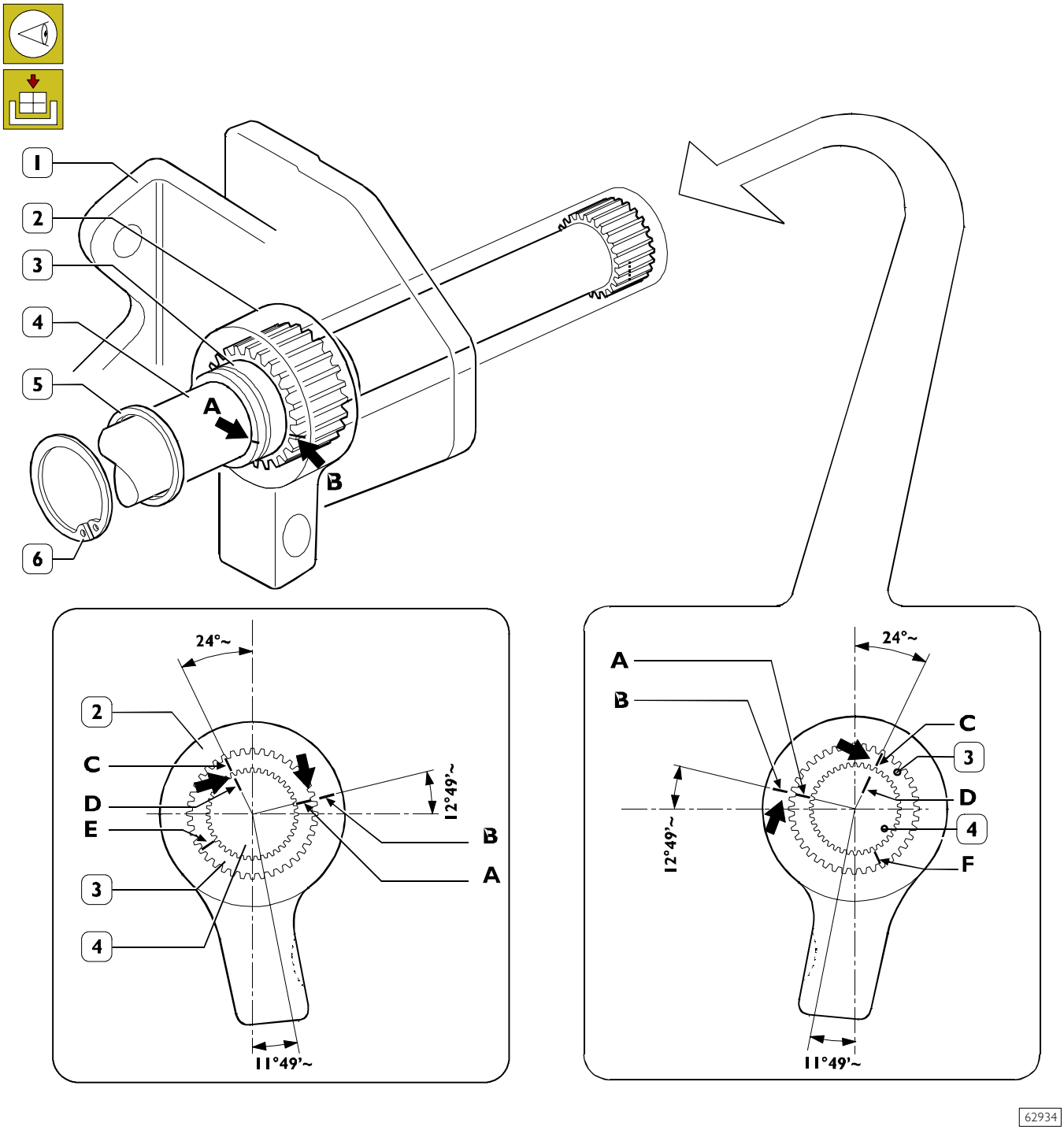

AD. Right torsion bar

AS. Left torsion bar

1. Bracket - 2. Adjustment lever - 3. Sleeve - 4. Torsion bar - 5. Washer - 6. Circlip - A. Front reference mark on sleeve (3) - B. Front reference mark on adjustment lever (2) - C. Rear reference mark on sleeve (3) - D. Reference mark on torsion bar (4) - E. Reference mark on left torsion bar - F. Reference mark on right torsion bar.

After refitting torsion bar (4)/ sleeve (3)/ adjustment lever (2), secure the sleeve (3) to the bracket with the circlip (6). Refit the fuel tank (if removed).

Figure 69

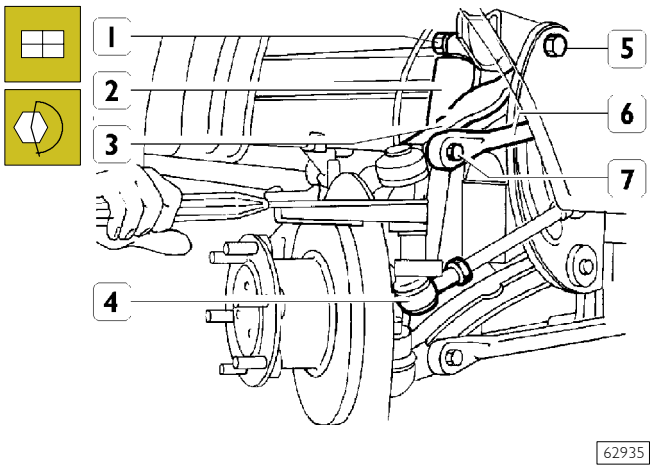

Refit the tie rod (6) to the lever (3) without tightening to torque the nut for screw (7); connect the articulated head (4) of the steering box tie rod to the stub axle lever and tighten the nut to the specified torque.

Connect the shock absorber with the screw (5) and the nut (1) and tighten the latter to the specified torque.

Refit wheels, fit nut protection and tighten the fastening nuts; remove stands and lower the vehicle.

Then tighten to the specified torque the following components:

- wheel fastening nuts;
- nut and lock nut fastening the torsion bars to the relevant levers;
- nuts for screws fastening the upper tie rods to the relevant levers.

Adjust torsion bar preload as described in the following paragraph.

Torsion bar preload adjustment

Figure 70

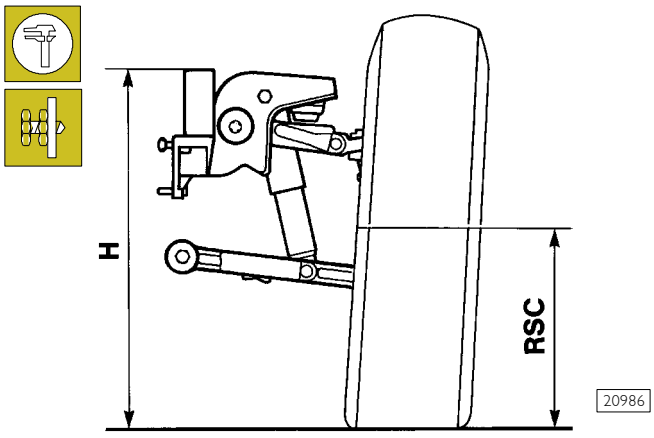

TORSION BAR PRELOAD CHECK DIAGRAM

H = mm, height from ground of side member upper edge measured as close as possible to suspension connection area

RSC (Loaded radius):

- with 225/75R16 tyres, 345 mm with 2500 kg load
- with 7.00R16 tyres, 364 mm with 2000 kg load

Check whether tyre pressure is the specified one and then using the proper gauge, check whether tyre tread depth is almost the same on both wheels.

Measure on both vehicle sides the height (H) from ground of side member upper edge - measured as close as possible to suspension connection area

Height (H) shall correspond to the value specified in the following table.

Figure 71

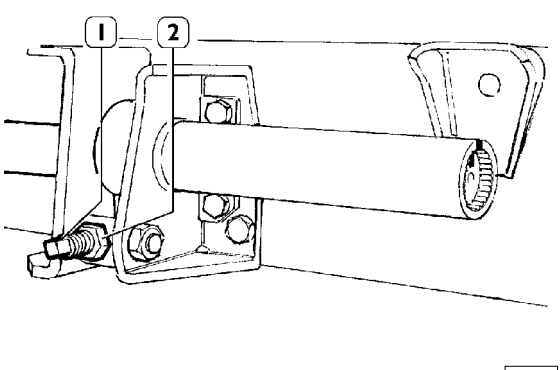

If a different value is found, operate on the adjustment screw (1) as required, taking into account that before performing this operation the vehicle shall always be lifted from ground with hydraulic jack to prevent screw damaging.

Once proper vehicle setup is obtained, lock the screw with the lock nut (2).

Load on front wheels (Kg)	Tyres	
	225/75 R 16	7.00 R 16
1400	672	691
1500	665.6	684.6
1700	652.6	671.6
1800	646	665
1900	639.4	658.4
2100	626.1	645.1
2300	612.8	631.8
2400	606.1	625.1
2500	599.5	618.5

Rear mechanical suspensions

	Page
DESCRIPTION	49
CHARACTERISTICS AND DATA	50
❑ Rear leaf spring	50
❑ Rear shock absorbers	67
TOOLS	68
TIGHTENING TORQUES	69
❑ Vehicles 29 L - 35 S	69
❑ Vehicles 35 C - 40 C - 45 C- 50 C	70
❑ Vehicles 60 C - 65 C	71
REAR LEAF SPRING	72
❑ Vehicles: 29 L - 35 S	72
❑ Removal	72
❑ Refitting	72
❑ Vehicles: 35 C - 40 C - 45 C - 50 C - 60 C - 65 C	73
❑ Removal	73
❑ Refitting	73
REPAIRS	74
❑ Disassembling the leaf spring	74
❑ Checks	74
❑ Assembling the leaf spring	74
❑ Replacing the bushings	74
REAR SHOCK ABSORBERS	75
❑ Removal	75
❑ Refitting	75
STABILIZER BAR	76
❑ Removal	76
❑ Refitting	76

DESCRIPTION

The rear suspension is composed of:

- ❑ two leaf springs which, according to the vehicle, can be of a semi-elliptic type with double flexibility or of a parabolic type with simple flexibility.;
- ❑ two stop bumpers;
- ❑ two hydraulic double acting shock absorbers;
- ❑ stabilizer bar.

The semi-elliptic leaf spring is very stiff because all leaves forming the leaf spring have the same thickness from one end to the other.

Moreover, leaves are placed one against the other and this causes a great internal friction which limits the movements of the leaf spring.

The parabolic leaf spring is formed by leaves which have a greater thickness in the middle than at the two ends.

Leaves are spaced by means of shims and this reduces much of the internal friction.

The low internal friction and the particular form of the leaves make the parabolic leaf spring more "soft", this makes driving easier.

Hydraulic double-acting telescopic shock absorbers, hinder the wheel movement both upwards and downwards, allowing a great driving stability.

The stabilizer bar must keep the geometry between the wheel axle and the chassis and arrange the load evenly over the wheels on the same axle.

Figure 72

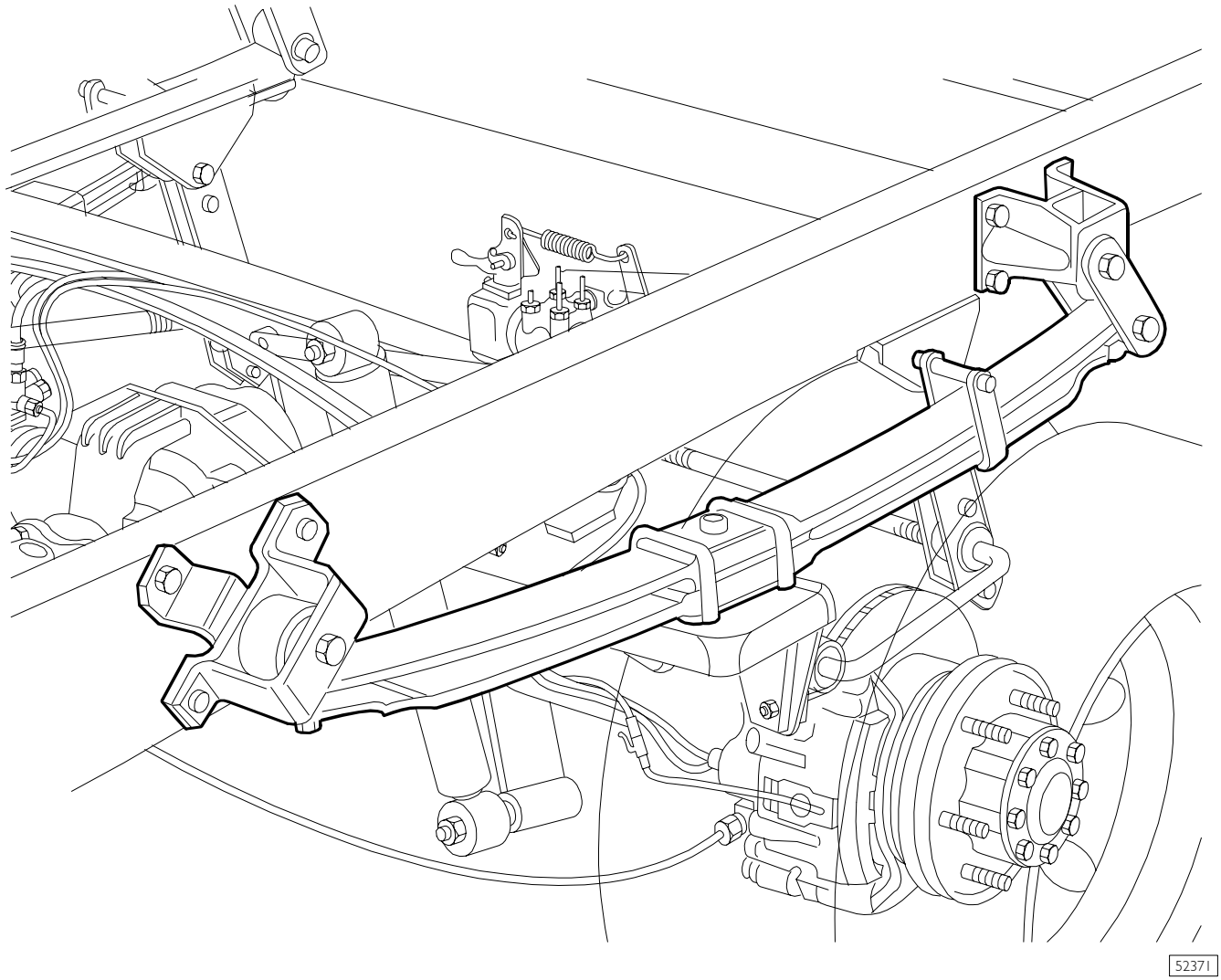

REAR SUSPENSION

CHARACTERISTICS AND DATA

Rear leaf spring

Vehicles: 29 L - 35 S

		mm
	Parabolic springs	N° 2
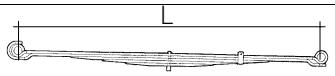	Spring length (measured at eye centres)	1500 ± 3
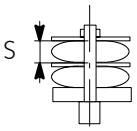	Leaf thickness (measured at centre)	24 (22)*
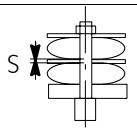	Gap between leaves	-
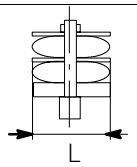	Leaf width	80 ± 0.5
	CONTROL DATA WITH NEW SPRING: Spring flexibility with static load	8.6 mm/kN
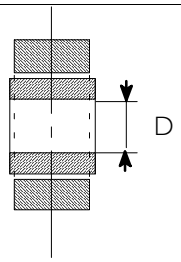	Main leaf eye inner diameter (Bush seat)	40 ± 0.5
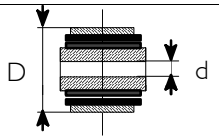	D = bush outer diameter d = bush inner diameter	$40^{+0}_{-0.1}$ $16.5^{+0.2}_{-0}$

(*) Alternatively

Rear leaf spring

Vehicles: 35 C - Camper version

		mm
	Parabolic springs	N° 2
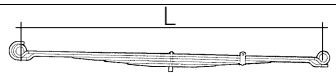	Spring length (measured at eye centres)	1415 ± 3
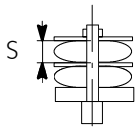	Leaf thickness (measured at centre)	-
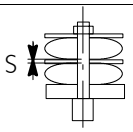	Gap between leaves	15
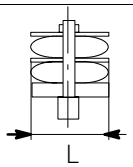	Leaf width	60 ± 0.5
	CONTROL DATA WITH NEW SPRING: Spring flexibility with static load	6.4 mm/kN
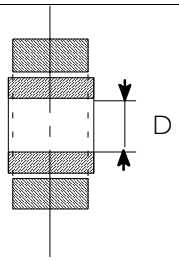	Main leaf eye inner diameter (Bush seat)	40 ± 0.5
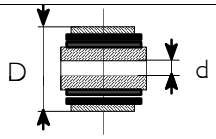	D = bush outer diameter d = bush inner diameter	$40^{+0}_{-0.1}$ $16.5^{+0.2}_{-0}$

Rear leaf spring
Vehicles: 35 C

		mm
	Parabolic springs	N° 2
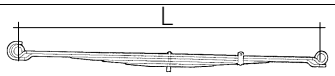	Spring length (measured at eye centres)	1415 ± 3
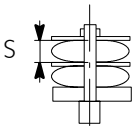	Leaf thickness (measured at centre)	19
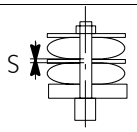	Gap between leaves	3 (1 x 3 + 1 x 25)*
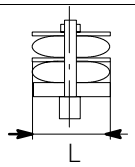	Leaf width	60 ± 0.5
	CONTROL DATA WITH NEW SPRING: Spring flexibility with static load	10.5 mm/kN
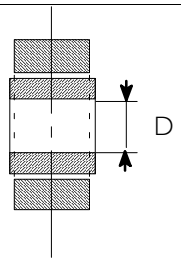	Main leaf eye inner diameter (Bush seat)	40 ± 0.5
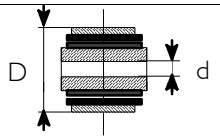	D = bush outer diameter d = bush inner diameter	$40^{+0}_{-0.1}$ $16.5^{+0.2}_{-0}$

(*) For versions with maximum front load = 1900 kg

Rear leaf spring

Vehicles: 40 C chassis cowls

		mm
	Parabolic springs	N° 2
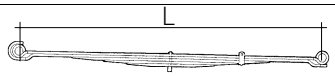	Spring length (measured at eye centres)	1415 ± 3
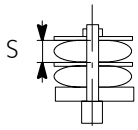	Leaf thickness (measured at centre)	22
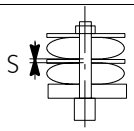	Gap between leaves	3
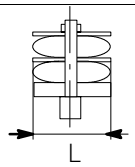	Leaf width	60 ± 0.5
	CONTROL DATA WITH NEW SPRING: Main spring flexibility with static load	7.6 mm/kN
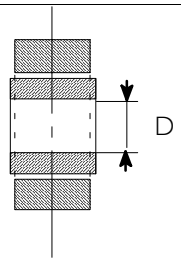	Main leaf eye inner diameter (Bush seat)	40 ± 0.5
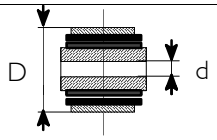	D = bush outer diameter d = bush inner diameter	$40^{+0}_{-0.1}$ $16.5^{+0.2}_{-0}$

Rear leaf spring
Vehicles: 40 C

		mm
	Parabolic springs	N° 2
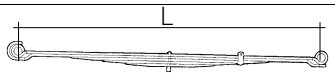	Spring length (measured at eye centres)	1415 ± 3
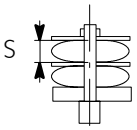	Leaf thickness (measured at the centre) thickness of the auxiliary leaf (measured at the centre)	18 18
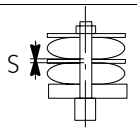	Gap between leaves	3
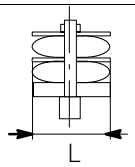	Leaf width	60 ± 0.5
	CONTROL DATA WITH NEW SPRING: Main spring flexibility with static load	7.6 mm/kN
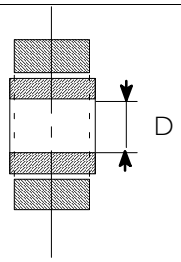	Main leaf eye inner diameter (Bush seat)	40 ± 0.5
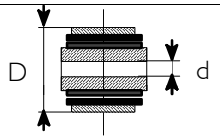	D = bush outer diameter d = bush inner diameter	$40^{+0}_{-0.1}$ $16.5^{+0.2}_{-0}$

Rear leaf spring
Vehicles: 45 C

		mm
	Parabolic springs	N° 2
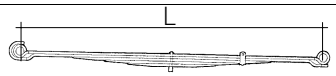	Spring length (measured at eye centres)	1415 ± 3
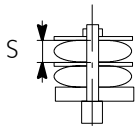	Leaf thickness (measured at centre)	22 (23)*
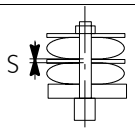	Gap between leaves	3
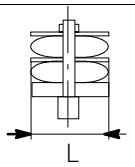	Leaf width	60 ± 0.5
	CONTROL DATA WITH NEW SPRING: Spring flexibility with static load	6.9 mm/kN
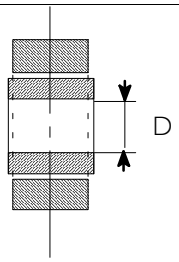	Main leaf eye inner diameter (Bush seat)	40 ± 0.5
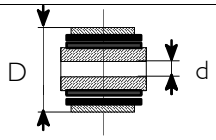	D = bush outer diameter d = bush inner diameter	$40^{+0}_{-0.1}$ $16.5^{+0.2}_{-0}$

(*) Alternatively

Rear leaf spring
Vehicles: 50 C

		mm
	Parabolic springs	N° 2
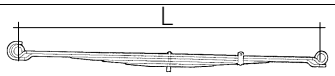	Spring length (measured at eye centres)	1415 ± 3
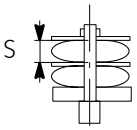	Leaf thickness (measured at centre)	19
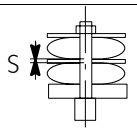	Gap between leaves	3
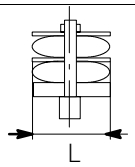	Leaf width	60 ± 0.5
	CONTROL DATA WITH NEW SPRING: Main spring deflection with static load Auxiliary spring deflection with static load Main spring flexibility with static load	 5.6 mm/kN
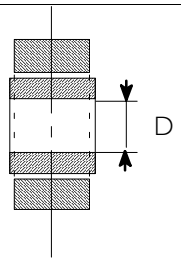	Main leaf eye inner diameter (Bush seat)	40 ± 0.5
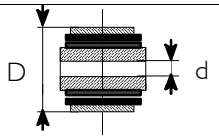	D = bush outer diameter d = bush inner diameter	$40^{+0}_{-0.1}$ $16.5^{+0.2}_{-0}$

Rear leaf spring
Vehicles: 60 C - 65 C

		mm
	Parabolic springs	N° 2
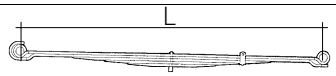	Spring length (measured at eye centres)	1415 ± 3
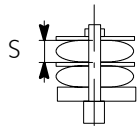	Thickness of the main leaves (measured at the centre) thickness of the auxiliary leaf (measured at the centre)	18 (19)* 28
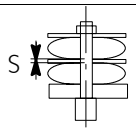	Gap between leaves	3
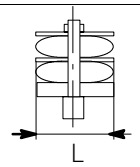	Leaf width	70 ± 0.5
	CONTROL DATA WITH NEW SPRING: Main spring deflection with static load Flexibility with static load after aux. spring action	 9.3 mm/kN 3.4 mm/kN
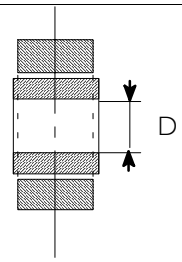	Main leaf eye inner diameter (Bush seat)	$40^{+0.5}_{-0.2}$
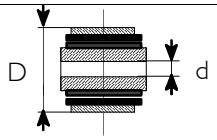	D = bush outer diameter d = bush inner diameter	$40^{+0.02}_{-0.07}$ $16.5^{+0.2}_{-0}$

(*) Alternatively

Rear leaf spring
Vehicles: 35 C

		mm
	Semi-elliptical springs	N° 2
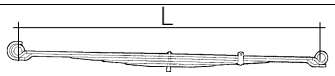	Spring length (measured at centre of eyes)	1415 ± 4
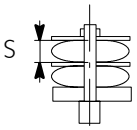	Leaf thickness (measured at the centre), main leaf (1st - 4th) auxiliary leaf (1st - 2nd)	 9 15
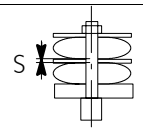	Gap between leaves	--
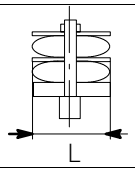	Leaf width	60 ± 0.5
	CONTROL DATA WITH NEW SPRING: Main spring flexibility with static load Flexibility with static load after aux. spring action	 20.2 mm/kN 10.4 mm/kN
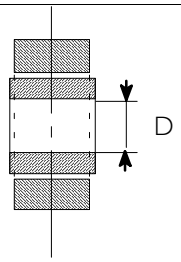	Main leaf eye inner diameter (Bush seat)	40 ± 0.5
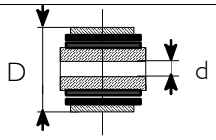	D = bush outer diameter d = bush inner diameter	$40^{+0}_{-0.1}$ $16.5^{+0.2}_{-0}$

Rear leaf spring
Vehicles: 35 C - 40 C

		mm
	Semi-elliptical springs	N° 2
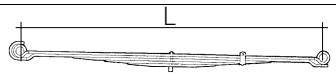	Spring length (measured at centre of eyes)	1415 ± 4
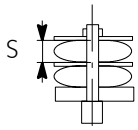	Leaf thickness (measured at the centre), main leaf (1st - 4th) auxiliary leaf (1st - 3rd)	9 15
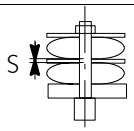	Gap between leaves	--
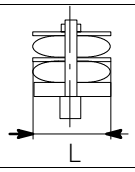	Leaf width	60 ± 0.5
	CONTROL DATA WITH NEW SPRING: Main spring flexibility with static load Flexibility with static load after aux. spring action	19.7 mm/kN 6.4 mm/kN
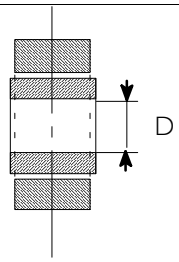	Main leaf eye inner diameter (Bush seat)	40 ± 0.5
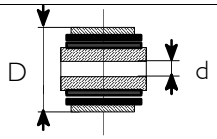	D = bush outer diameter d = bush inner diameter	$40^{+0}_{-0.1}$ $16.5^{+0.2}_{-0}$

Rear leaf spring

Vehicles: 35 C - 40 C (semi-elliptical with leaf spring)

		mm
	Semi-elliptical springs	N° 2
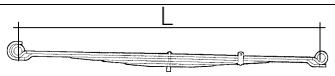	Spring length (measured at centre of eyes)	1415 ± 4
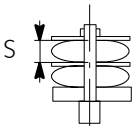	Leaf thickness (measured at the centre), master leaf (1st - 7th) additional leaf (1st - 6th)	 9 8
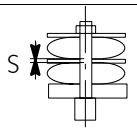	Gap between leaves	7
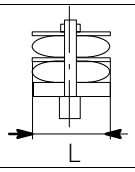	Leaf width	60 ± 0.5
	CONTROL DATA WITH NEW SPRING: Main spring flexibility with static load Flexibility with static load after aux. spring action	 15 mm/kN 3.6 mm/kN
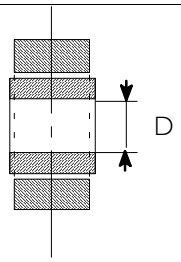	Main leaf eye inner diameter (Bush seat)	40 ± 0.5
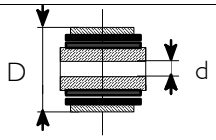	D = bush outer diameter d = bush inner diameter	$40^{+0}_{-0.1}$ $16.5^{+0.2}_{-0}$

Rear leaf spring
Vehicles: 45 S

		mm
	Semi-elliptical springs	N° 2
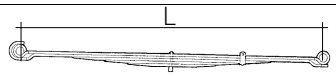	Spring length (measured at centre of eyes)	1415 ± 4
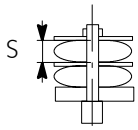	Leaf thickness (measured at the centre), master leaf (1st - 4th) additional leaf (5th - 7th)	9 15
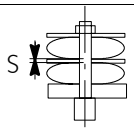	Gap between leaves	-
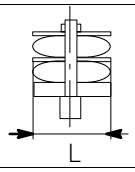	Leaf width	60 ± 0.5
	CONTROL DATA WITH NEW SPRING: Main spring flexibility with static load Flexibility with static load after aux. spring action	19.7 mm/kN 5.8 mm/kN
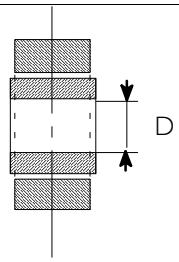	Main leaf eye inner diameter (Bush seat)	40 ± 0.5
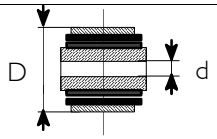	D = bush outer diameter d = bush inner diameter	$40^{+0}_{-0.1}$ $16.5^{+0.2}_{-0}$

Rear leaf spring

Vehicles: 45 C - 50 C (semi-elliptical with leaf spring)

		mm
	Semi-elliptical springs	N° 2
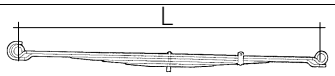	Spring length (measured at centre of eyes)	1415 ± 4
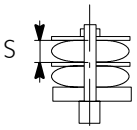	Leaf thickness (measured at the centre), master leaf (1st - 7th) additional leaf (1st - 6th)	 9 8
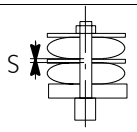	Gap between leaves	10
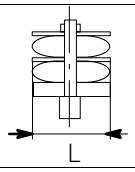	Leaf width	60 ± 0.5
	CONTROL DATA WITH NEW SPRING: Main spring flexibility with static load Flexibility with static load after aux. spring action	 14.5 mm/kN 3.4 mm/kN
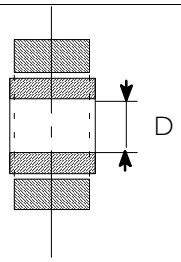	Main leaf eye inner diameter (Bush seat)	40 ± 0.5
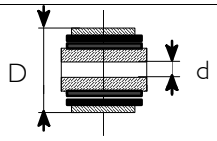	D = bush outer diameter d = bush inner diameter	$40^{+0}_{-0.1}$ $16.5^{+0.2}_{-0}$

Rear leaf spring
Vehicles: 50 C

		mm
	Semi-elliptical springs	N° 2
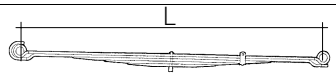	Spring length (measured at centre of eyes)	1415 ± 4
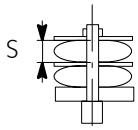	Leaf thickness (measured at the centre), master leaf (1st - 4th) additional leaf (1st - 3th)	9 16
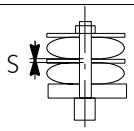	Gap between leaves	10
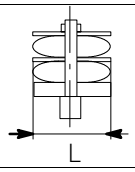	Leaf width	60 ± 0.5
	CONTROL DATA WITH NEW SPRING: Main spring flexibility with static load Flexibility with static load after aux. spring action	19.7 mm/kN 4.9 mm/kN
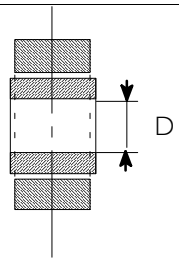	Main leaf eye inner diameter (Bush seat)	40 ± 0.5
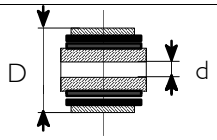	D = bush outer diameter d = bush inner diameter	$40^{+0}_{-0.1}$ $16.5^{+0.2}_{-0}$

Rear leaf spring
Vehicles: 50 C

		mm
	Parabolic springs	N° 2
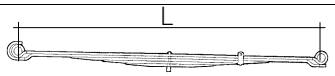	Spring length (measured at eye centres)	1415 ± 3
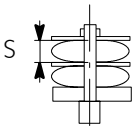	Leaf thickness (measured at the centre) master leaf	22 (24)*
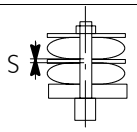	Gap between leaves	3 (10)*
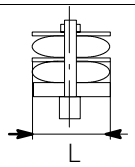	Leaf width	60 ± 0.5
	CONTROL DATA WITH NEW SPRING: Main spring flexibility with static load	5.6 mm/kN
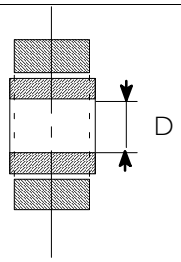	Main leaf eye inner diameter (Bush seat)	40 ± 0.5
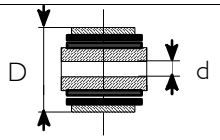	D = bush outer diameter d = bush inner diameter	$40^{+0}_{-0.1}$ $16.5^{+0.2}_{-0}$

(*) Alternatively

Rear leaf spring
Vehicles: 60 C - 65 C

		mm
	Semi-elliptical springs	N° 2
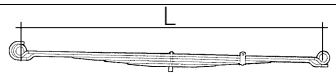	Spring length (measured at centre of eyes)	1415 ± 4
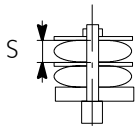	Leaf thickness (measured at the centre), master leaf (1st - 4th) additional leaf (1st - 2nd)	11 22
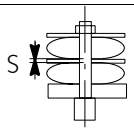	Gap between leaves	--
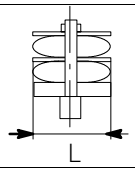	Leaf width	70 ± 0.5
	CONTROL DATA WITH NEW SPRING: Main spring flexibility with static load Flexibility with static load after aux. spring action	9.3 mm/kN 3.1 mm/kN
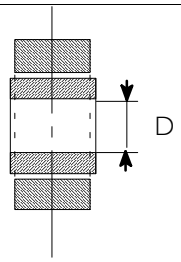	Main leaf eye inner diameter (Bush seat)	$40^{+0.5}_{-0.2}$
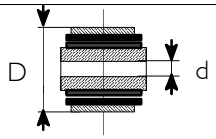	D = bush outer diameter d = bush inner diameter	$40^{+0.02}_{-0.07}$ $16.5^{+0.2}_{-0}$

Rear leaf spring

Vehicles: 60 C - 65 C (semi-elliptical with leaf spring)

		mm
	Semi-elliptical springs	N° 2
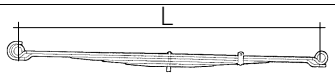	Spring length (measured at centre of eyes)	1415
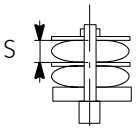	Leaf thickness (measured at the centre), master leaf (1st - 10th) auxiliary leaf thickness (1st - 10th)	 9 7
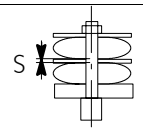	Gap between leaves	9
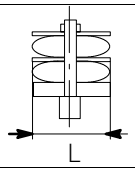	Leaf width	70 ± 0.5
	CONTROL DATA WITH NEW SPRING: Main spring flexibility with static load Flexibility with static load after aux. spring action	 8.5 mm/kN 2.4 mm/kN
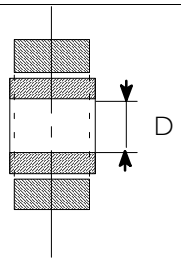	Main leaf eye inner diameter (Bush seat)	$40^{+0.5}_{-0.2}$
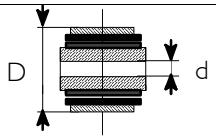	D = bush outer diameter d = bush inner diameter	$40^{+0.02}_{-0.07}$ $16.5^{+0.2}_{-0}$

(*) Alternatively

Rear shock absorbers

Models:	**29 L - 35 S**		
		**Arvin Meritor**	**Sachs**
	Distance between centre of eyes:		
	Open	475 ± 3 mm	480 ± 3 mm
	Closed	302 ± 3 mm	300 ± 3 mm
	Stroke	173 mm	180 mm
Models:	**35 C - 40 C - 45 C - 50 C**		
		**Arvin Meritor**	**Sachs**
	Distance between centre of eyes:		
	Open	571 ± 3 mm	565 ± 3 mm
	Closed	350 ± 3 mm	345 ± 3 mm
	Stroke	221 mm	220 mm
Models:	**60 C - 65 C**		
		**Arvin Meritor**	**Sachs**
	Distance between centre of eyes:		
	Open	564 ± 3 mm	565 ± 3 mm
	Closed	347 ± 3 mm	345 ± 3 mm
	Stroke	217 mm	220 mm

Rear stabilizer bar

Models:	29 L - 35 S - 35 C - 40 C	45 C - 50 C Vans	45 C - 50 C Truck Chassis Cabs	60 C - 65 C
Stabilizer bar diameter (mm)	**18**	**20**	**22**	**28**

TOOLS

TOOL NO.		DESCRIPTION
99306064	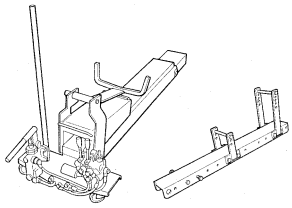	Hydraulic trolley to support leaf spring during removal and refitting
99321024	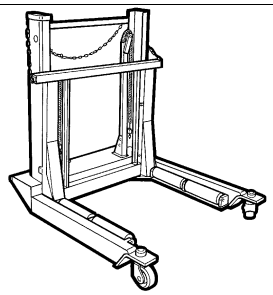	Hydraulic trolley for wheel removal and refitting
99370617	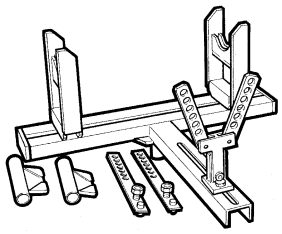	Bracket for removal - refitting and/or support of rear axle

TIGHTENING TORQUES
Vehicles 29 L - 35 S

Figure 73

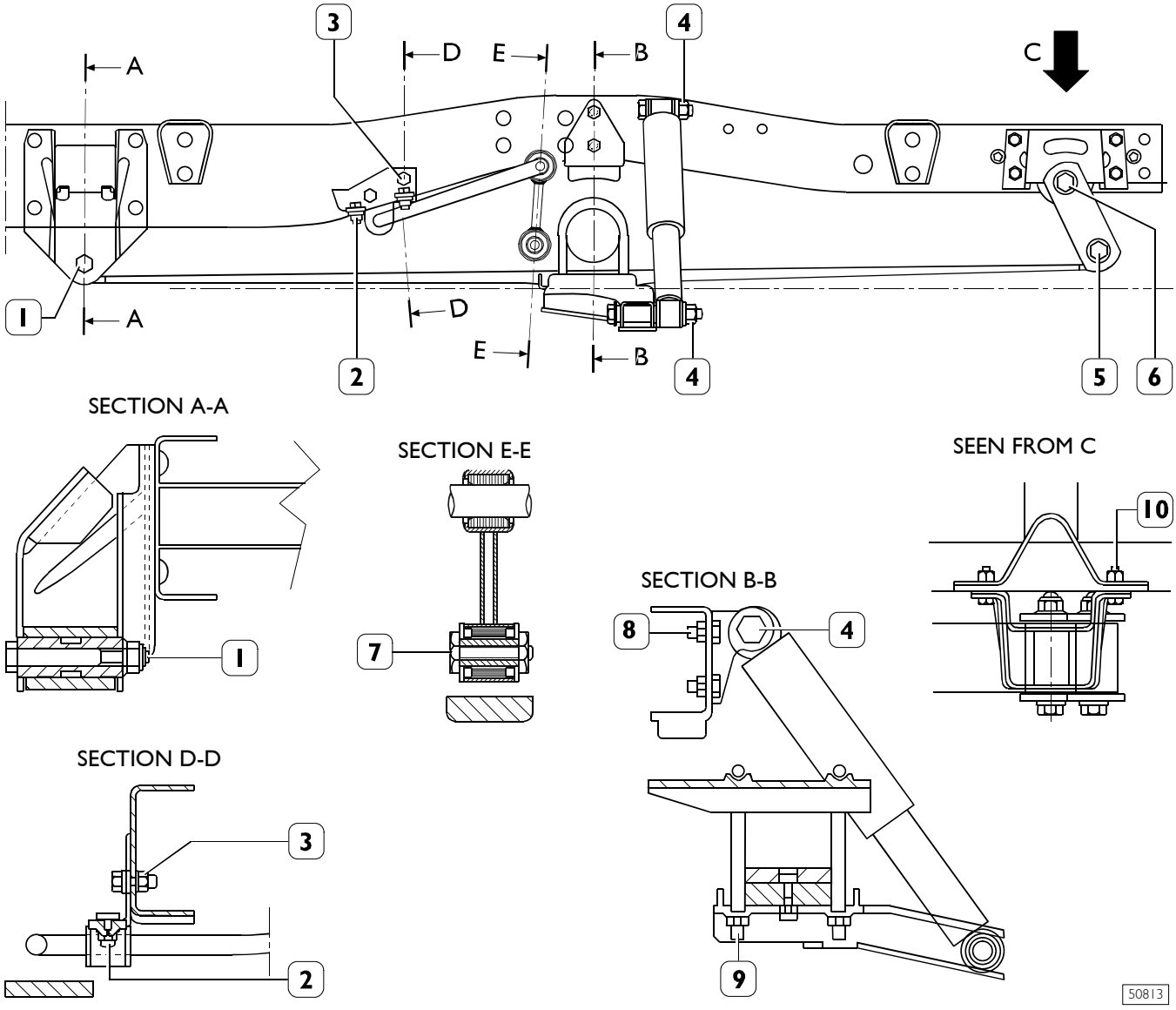

The diagram refers to vans with wheelbase 3000 - 3300 mm.

COMPONENT		TORQUE	
		Nm	kgm
1	M16 nut for screw securing front leaf spring	139 ÷ 170	13.9 ÷ 17
2	M10 screw for nut securing stabilizer bar support cap	26.4 ÷ 35.3	2.6 ÷ 3.5
3	M10 nut for screw securing stabilizer bar support	26.4 ÷ 35.3	2.6 ÷ 3.5
4	M16 nut for screw securing top and bottom shock absorber	124 ÷ 152	12.4 ÷ 15.2
5	M16 screw for nut securing rear leaf spring	139 ÷ 170	13.9 ÷ 17
6	M16 screw for nut securing shackle to rear mounting	130 ÷ 170	13 ÷ 17
7	M10 screw for nut securing stabilizer bar anchoring connecting rod to the rear axle	26.4 ÷ 35.3	2.6 ÷ 3.5
8	Nut for screw securing shock absorber top mounting to the chassis frame	47 ÷ 58	4.7 ÷ 5.8
9	M12 nuts for stands securing leaf spring to the rear axle	98 ÷ 120	9.8 ÷ 12
10	M10 nuts for screws securing leaf spring rear mounting	43 ÷ 53	4.3 ÷ 5.3

TIGHTENING TORQUES
Vehicles 35 C - 40 C - 45 C- 50 C

Figure 74

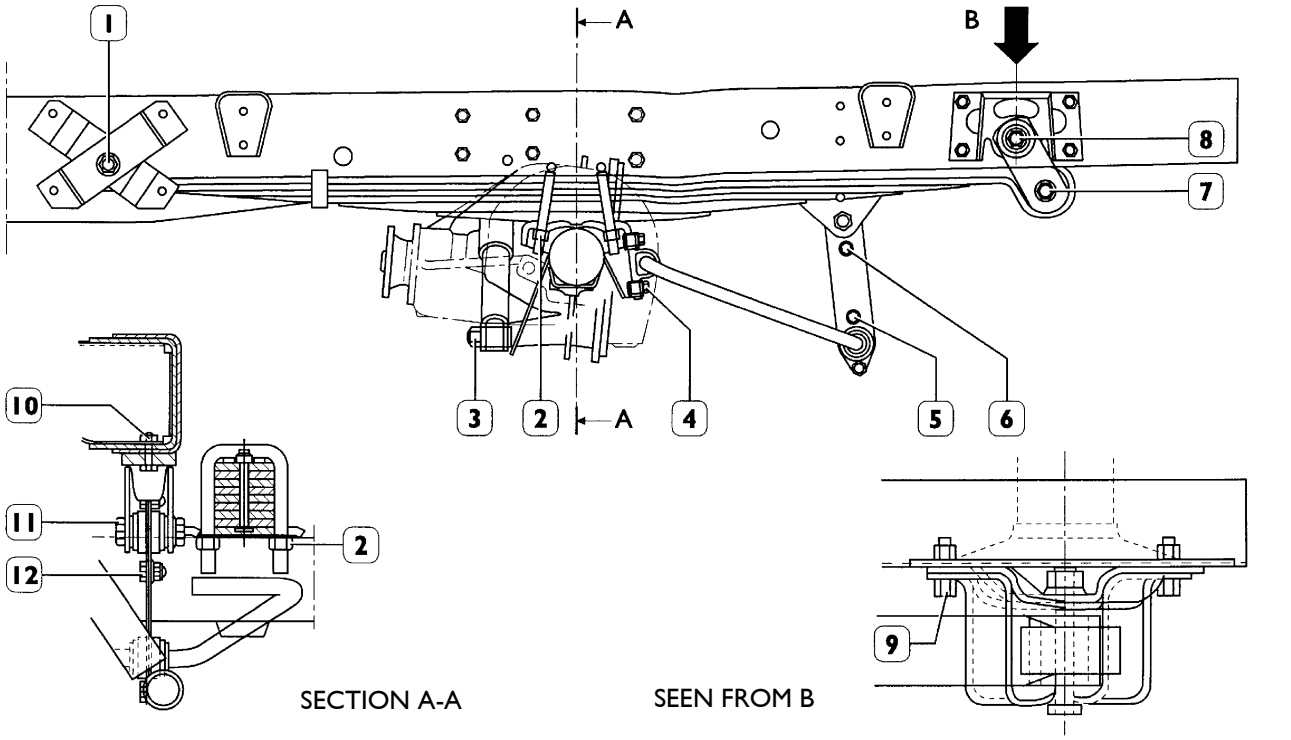

COMPONENT		TORQUE	
		Nm	kgm
1	M16 nut for screw securing front leaf spring	139 ÷ 170	13.9 ÷ 17
2	Nuts for stands securing leaf spring to the rear axle { M14	74.5 ÷ 91.2	7.4 ÷ 9.1
	{ M16	113 ÷ 170	11.3 ÷ 17
3	M16 nut for screw securing top and bottom shock absorber	124 ÷ 152	12.4 ÷ 15.2
4	M10 nut for screw securing stabilizer bar support cap	26.4 ÷ 35.3	2.6 ÷ 3.5
5	M10 nut for screw joining stabilizer bar anchoring connecting rods	26.4 ÷ 35.3	2.6 ÷ 3.5
6	M16 screw for nut securing connecting rod to mounting	179.4 ÷ 220.6	17.9 ÷ 22
7	M16 screw for nut securing rear leaf spring	139 ÷ 170	13.9 ÷ 17
8	M16 screw for nut securing shackle to rear mounting	139 ÷ 170	13.9 ÷ 17
9	M10 screw for nut securing connecting rod mounting to the chassis frame	43 ÷ 53	4.3 ÷ 5.3
10	M8 screw for nut securing buffer to the chassis frame	26.4 ÷ 35.3	2.6 ÷ 3.5

TIGHTENING TORQUES
Vehicles 60C - 65C

Figure 75

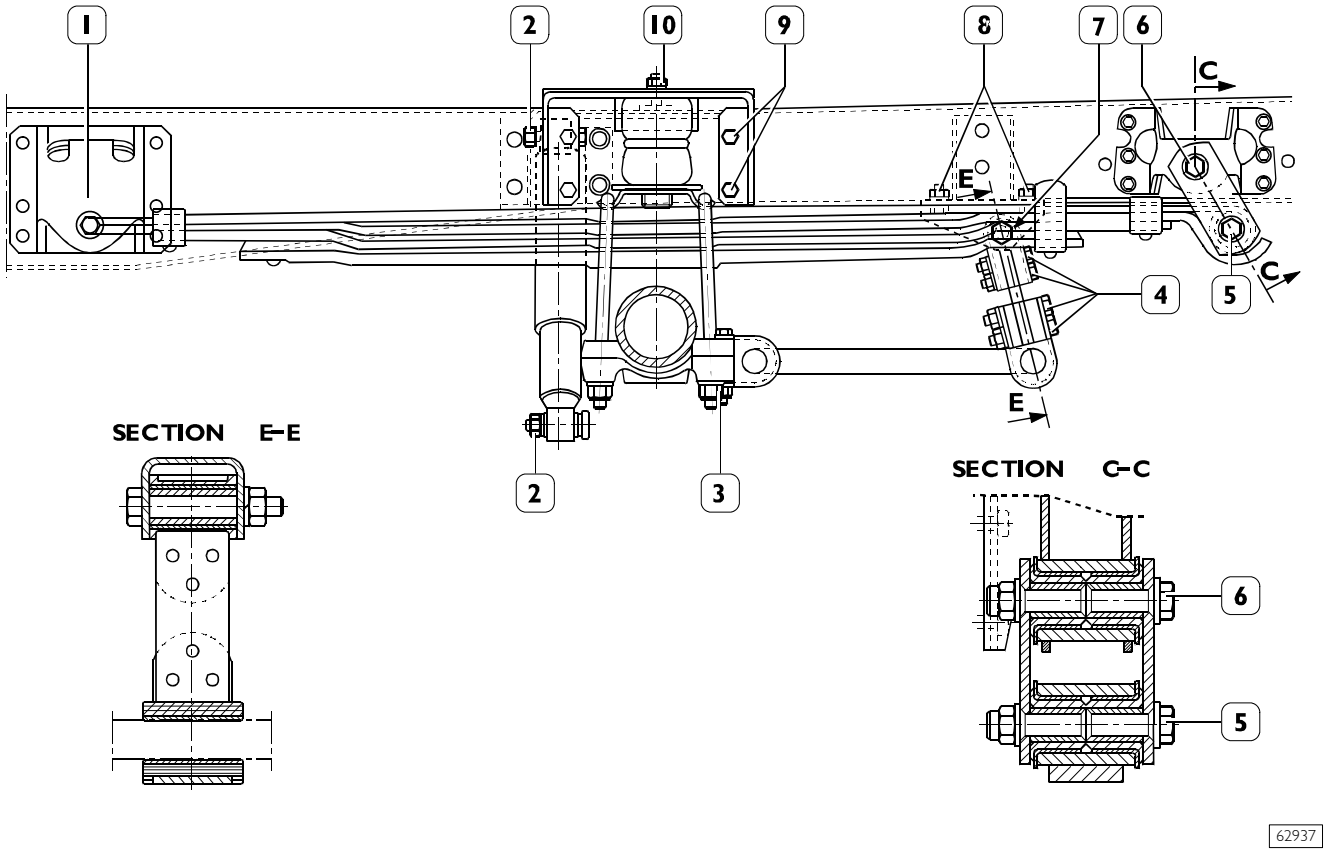

COMPONENT		TORQUE	
		Nm	kgm
1	Screw for front leaf spring fastening nut	186 ÷ 152	18.6 ÷ 15.2
2	M16 nut for upper and lower shock absorber fastening screw	92 ÷ 74	9.2 ÷ 7.4
3	Nut for stands fastening leaf spring to rear axle	150 ÷ 190	15.3 ÷ 19.3
4	Nut for screw fastening brackets and spacers to stabilizer bar supporting rod		
5	Screw for rear leaf spring fastening nut	186 ÷ 152	18.6 ÷ 15.2
6	Screw for nut fastening connecting rods to support	186 ÷ 152	18.6 ÷ 15.2
7	Nut for screw fastening stabilizer bar spacer and rod to support	109.9 ÷ 137.7	11.2 ÷ 14
8	M10 screw for nut fastening support to chassis	26.4 ÷ 32.3	2.7 ÷ 3.3
9	Screw for nut fastening cross member to chassis	71.7 ÷ 87.7	7.3 ÷ 8.9
10	Nut fastening bumper to chassis	49 ÷ 40	4.9 ÷ 4

REAR LEAF SPRING
Vehicles: 29 L - 35 S

Figure 76

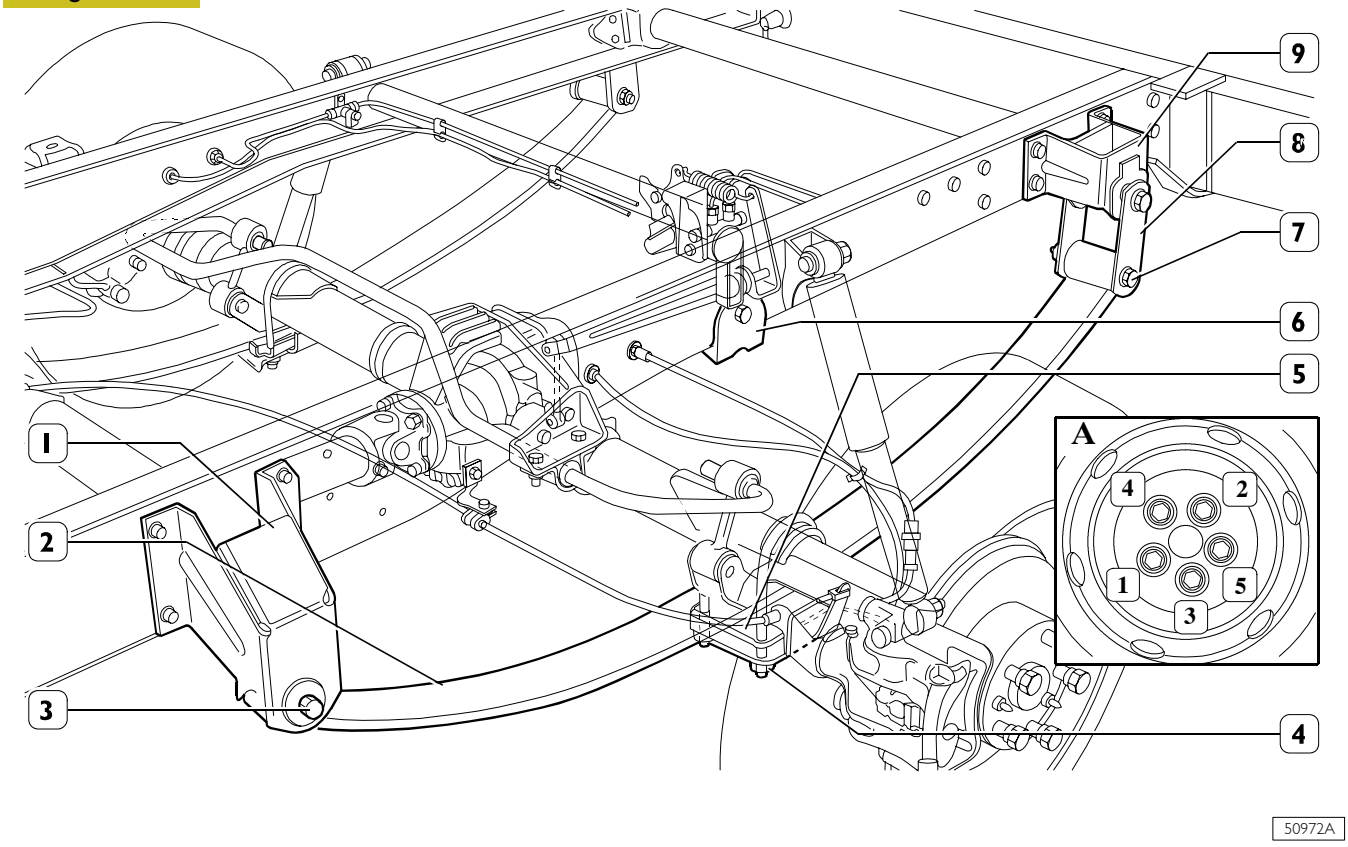

REAR SUSPENSION WITH SINGLE-BLADE PARABOLIC LEAF SPRING

Removal

Set the vehicle on level ground. Lock the front wheels with chocks. Loosen the screws securing the rear wheels.

Put the bracket 99370617 on a hydraulic lift, position it under the rear axle and lift the vehicle.
Rest the chassis frame on stands, keeping the bracket in contact with the rear axle.

Take out the nuts securing the wheels with tool 99321024.

Take out the nuts (4) and remove the brackets (5) joining the leaf springs (2) to the rear axle.

Position the trolley 99306064 under the leaf spring (2) and fasten this to the trolley support with the brackets.

Take out the nuts and remove the screw (3) securing the leaf spring (2) to the front mounting (1).

Take out the nut and remove the screw (7) securing the leaf spring (2) to the shackle (8) of the rear mounting (9).

Lower the trolley 99306064 and extract the leaf spring.

Refitting

To re-fit, carry out the removal operations in reverse, taking the following precautions.

Check the threads of brackets which fasten the leaf springs to the axle; if they are damaged, re-machine the threads (operation 500412) or replace the brackets.
Check the conditions of bumpers (6), if they are damaged, replace them (operation 500417).

Tighten the nuts to the prescribed driving torque. Following the order shown in the figure.

After replacing the leaf springs and the hydraulic shock absorbers, it is necessary to check the efficiency of the braking control and, if necessary, carry out its adjustment (operation 796910. See Braking System Section).

Vehicles: 35 C - 40 C - 45 C - 50 C - 60 C - 65 C

Figure 77

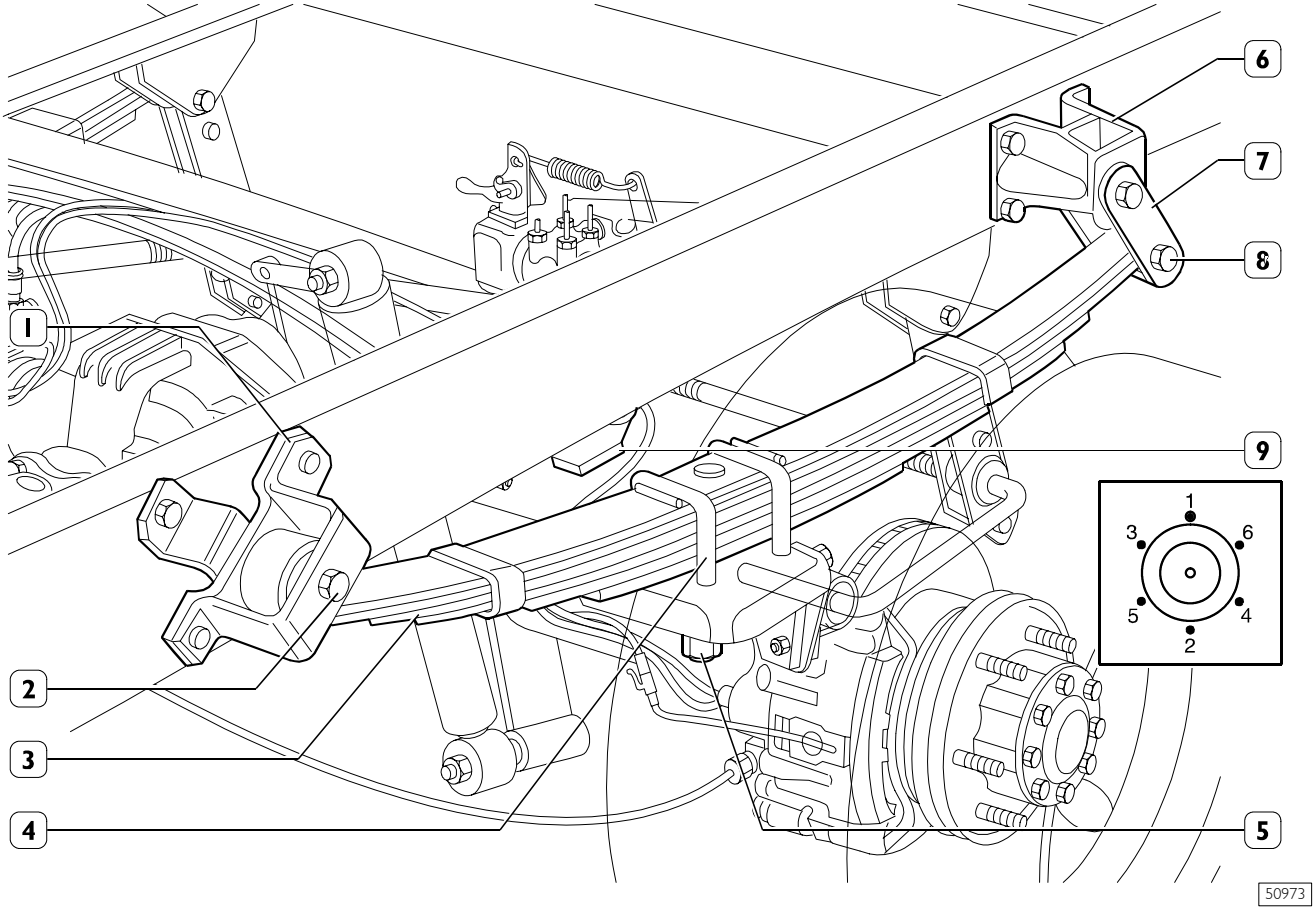

REAR SUSPENSION WITH SEMI-ELLIPTICAL LEAF SPRING

Removal

Set the vehicle on level ground. Lock the front wheels with chocks. Loosen the screws securing the rear wheels.

Put the bracket 99370617 on a hydraulic lift, position it under the rear axle and lift the vehicle rest the chassis frame on stands, keeping the bracket in contact with the rear axle.

Take out the nuts securing the wheels with tool 99321024.

Take out the nuts (5) and remove the brackets (4) joining the leaf springs (3) to the rear axle.

Position the trolley 99306064 under the leaf spring and fasten this to the trolley support with the brackets.

Take out the nut and remove the screw (2) securing the leaf spring (3) to the front mounting (1).

Take out the nut and remove the screw (8) securing the leaf spring (3) to the shackle (7) of the rear mounting (6).

Operating the hydraulic lift, lower the rear axle to be able to remove the centring setscrew of the leaf spring from it and extract the leaf spring.

When lowering the rear axle, make sure the brake system pipes are not put under strain.

Refitting

To re-fit, carry out the removal operations in reverse, taking the following precautions.

Check the threads of brackets which fasten the leaf springs to the axle; if they are damaged, re-machine the threads (operation 500412) or replace the brackets.

Check the conditions of bumpers (9), if they are damaged, replace them.

Tighten the nuts to the prescribed driving torque. Following the order shown in the figure.

After replacing the leaf springs and the hydraulic shock absorbers, it is necessary to check the efficiency of the braking control and, if necessary, carry out its adjustment (operation 796910. See Braking System Section).

REPAIRS

Disassembling the leaf spring

Leaf springs must be disassembled only Figure 78 if it is necessary to replace the main leaf (1) or the first leaf (4), in this case go on as follows.

In case other leaves are broken or yielded, replace the whole leaf spring.

Figure 78

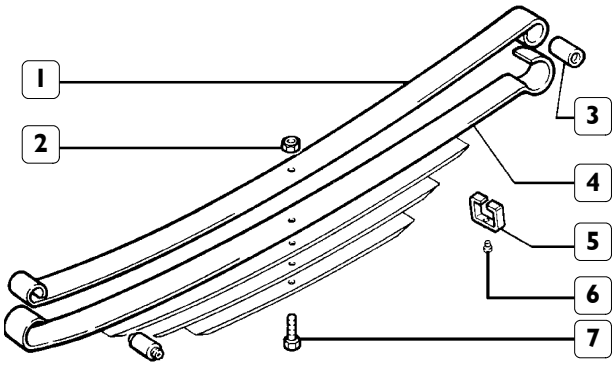

19074

Place the leaf spring in the vice of the suitable bench, clamping it near the central pin; remove the relevant nut and extract the central coupling pin.

Unscrew the fastening nut (2) of the central pin (7) and extract the pin. Open the pack side clips (5), lifting the two ends that are bent on the main leaf. Open the vice and disassemble the leaf spring.

Side clips (5) fastened with a rivet (6) to the leaf, can be re-used, provided that they do not show signs of breakage when they are re-bent to hold the pack. In this case, it is necessary to replace them with new ones to be fixed to the leaf with new rivets.

Checks

Carefully clean, with diesel oil or solvent, all components; ensure that the bushes are firmly driven in the spring eyes and shackles.

Check that the internal surface is not ovalized and that the pins are not worn or strained, in case they are, replace them.

Assembling the leaf spring

Ensure that the leaf contact surfaces are perfectly smooth and clean.
Before re-assembling the leaves, grease contact surfaces with a little of CA IG Grease.
Re-assemble the pack as follows (see Figure 78):

- ❑ place the main leaf (1) with the end eyes in the end pin of the 1st leaf (4);
- ❑ place the other leaves, included the one with the clip (5), near the former ones, rest them on one side and align them in the bench vice;
- ❑ insert through the central hole of the leaves, the central pin (7), then lock the pack in the vice;
- ❑ insert the nut (2) on the central pin (7) and lock;

Figure 79

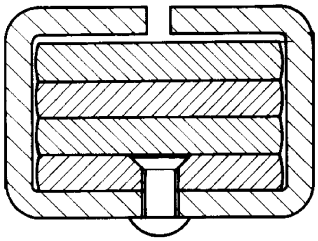

19075

- ❑ close the two side retaining clamps (5) by folding the ends back as shown in the figure.

500454 Replacing the bushings

The leaf spring bushings (3) are replaced with the hydraulic press and a suitable punch.

500940 REAR SHOCK ABSORBERS

Removal

Remove the shock absorber (1) extracting the upper and lower fastening nuts or bolts (⇐) of the shock absorber.

Refitting

To re-fit shock absorbers carry out the removal operations in reverse and comply with the prescribed torques.

Figure 80

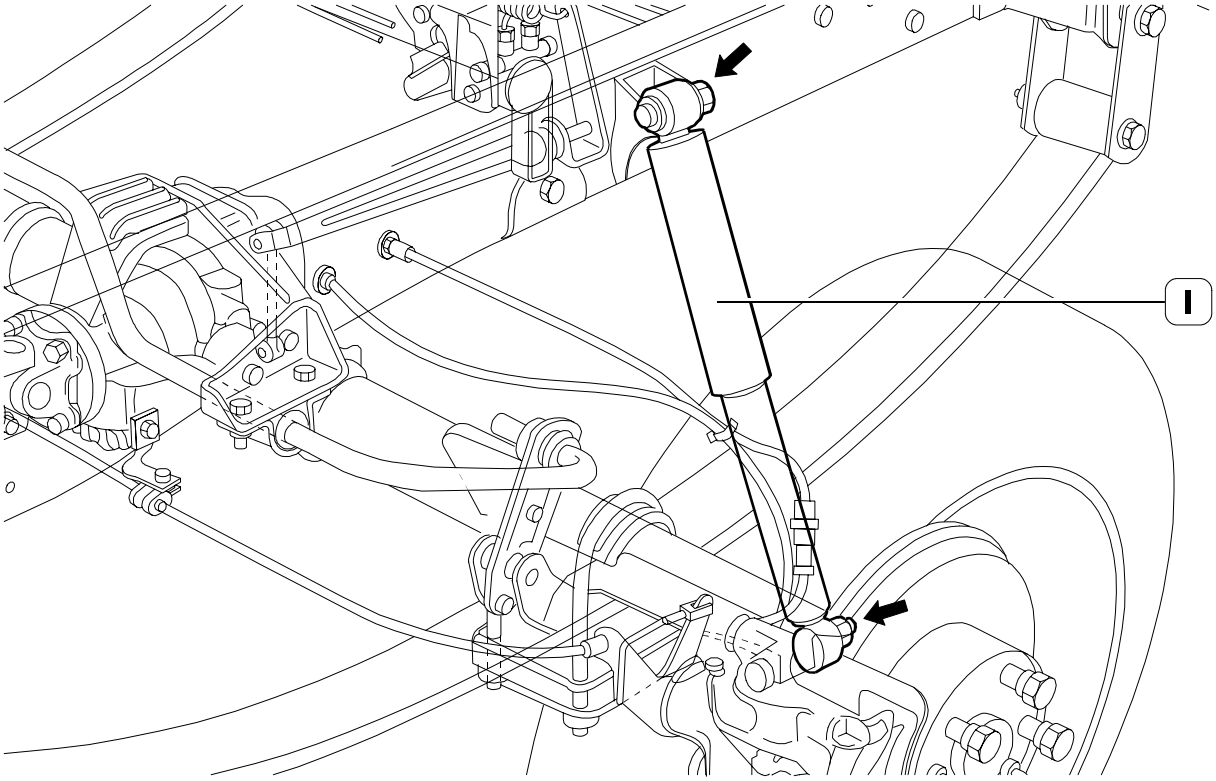

REAR AXLE SHOCK ABSORBERS VEHICLES 29 L - 35 S

Figure 81

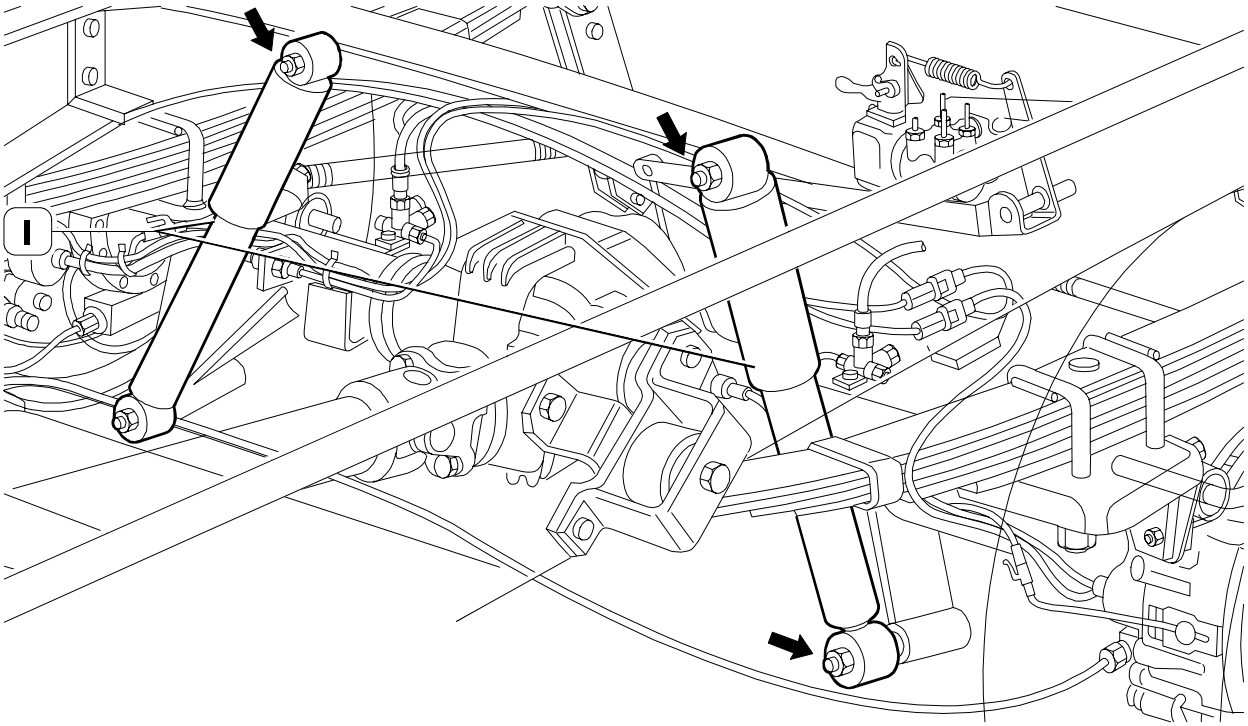

REAR AXLE SHOCK ABSORBERS VEHICLES 35 C - 65 C

528960 STABILIZER BAR

Removal

Remove the shock absorber bar (1) from its points of connection by taking out the fixing nuts and bolts (⇐).

Check that the bushings and/or flexible parts are not worn or deteriorated, if they are, replace them.

Refitting

For refitting, carry out the removal operations in reverse and comply with the prescribed torques.

Figure 82

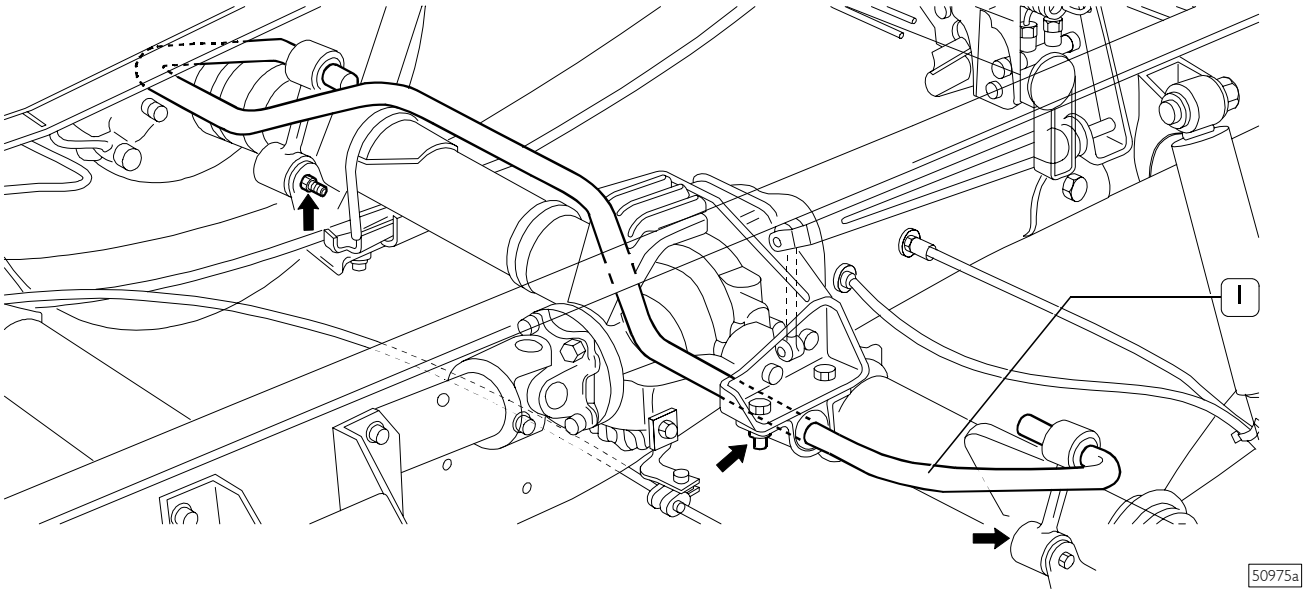

REAR STABILIZER BAR VEHICLES 29 L - 35 S

Figure 83

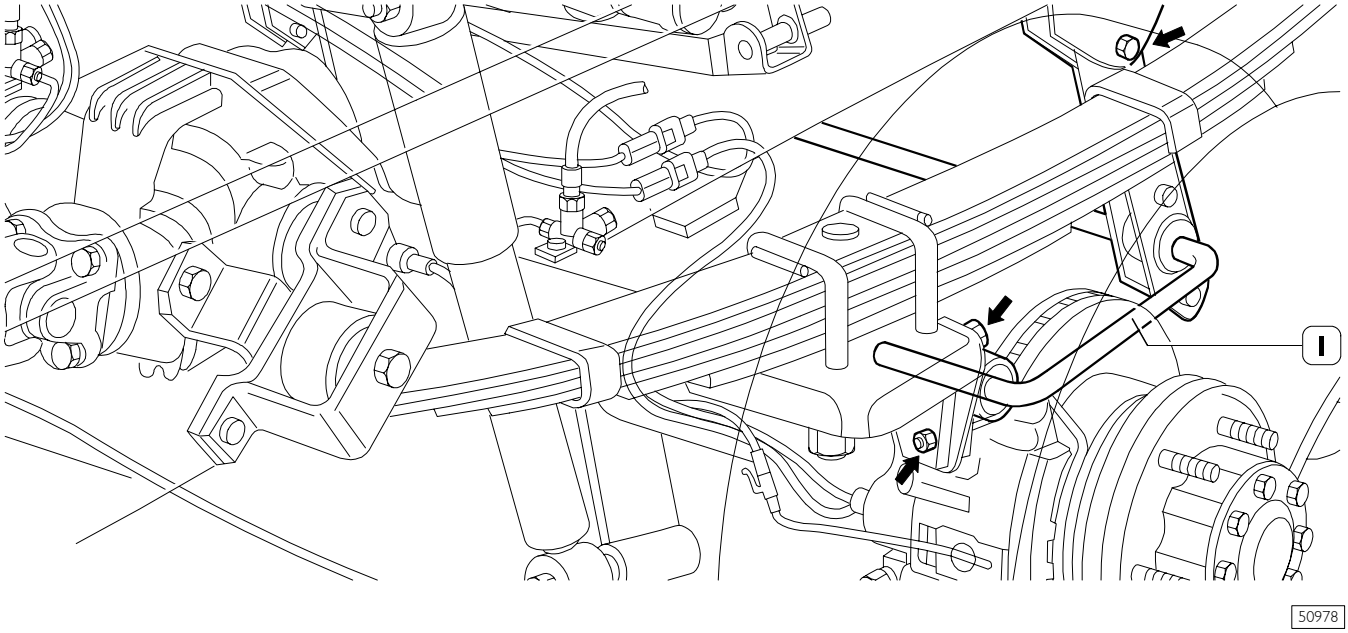

REAR STABILIZER BAR VEHICLES 35 C - 65 C

Rear air suspensions

	Page
DIAGNOSTIC	79
REAR PNEUMATIC SUSPENSIONS - VB-TECHNIEK TYPE	80
❑ Blink - code	80
REAR PNEUMATIC SUSPENSIONS - WABCO TYPE	80
❑ Blink-code	80
❑ Failure code table	81
GENERAL	82
PNEUMATIC SUSPENSIONS - WABCO TYPE (for R 29L - 35S vehicles)	82
SPECIFICATIONS AND DATA	83
❑ Air system components	83
❑ Rear leaf spring	84
❑ Rear shock absorbers	84
❑ Stabilizer bar	84
❑ Levelling and height values	84
ELECTRIC SYSTEM WABCO (ECAS)	85
PNEUMATIC SYSTEM WABCO (ECAS)	86
PNEUMATIC SYSTEM ON VEHICLE	87
❑ Vehicles without ABS	87
❑ Vehicles with ABS	88
CHASSIS SELF-LEVELLING, LIFTING AND LOWERING	89
❑ Operation	89
MAIN SYSTEM COMPONENTS	89
PNEUMATIC SUPPLY UNIT	89
❑ Specifications and data	89
ELECTRONIC CONTROL UNIT	89
❑ ECU programming/setting	90
LEVEL SENSOR	90
❑ Level sensor replacement	90
❑ Removal	90
❑ Refitting	90
❑ Level sensor adjustment	90
AIR SPRING	91
❑ Air spring replacement	91
❑ Removal	91
❑ Refitting	91
LOAD SENSING VALVE	91
❑ Load sensing valve replacement	92
❑ Removal	92
❑ Refitting	92
❑ Load sensing valve adjustment on vehicle	92
REAR SUSPENSION OVERHAUL	93
LEAF SPRING	93
❑ Removal	93
❑ Refitting	93
REAR SHOCK ABSORBERS	93
❑ Removal	93
❑ Refitting	93
REAR STABILIZER BAR	93
❑ Removal	93
❑ Refitting	93
PANHARD REACTION BAR	94
❑ Removal	94
❑ Refitting	94
AIR SUSPENSIONS TYPE VB-TECHNIEK (FOR VEHICLES 35C - 40C - 45C - 50C - 60C - 65C)	95
GENERAL INFORMATION	95
SPECIFICATIONS AND DATA	96
❑ Pneumatic system (for vehicles 35 C - 40 C)	96
❑ Rear leaf spring (vehicles 35 C - 40 C)	96

	Page
❑ Rear leaf spring (vehicles 45 C - 50 C)	97
❑ Rear shock absorbers	97
❑ Levelling and height values	97
VB TECHNIEK ELECTRIC SYSTEM	98
PNEUMATIC SYSTEM	99
VB-TECHNIEK ELECTRICAL SYSTEM (60 C - 65 C VEHICLES)	100
PNEUMATIC SYSTEM (VEHICLES: 60 C - 65 C)	101
PNEUMATIC SYSTEM ON VEHICLE	102
❑ Vehicles without ABS (35C - 40C - 45 C - 50 C)	102
❑ Vehicles with ABS (35C - 40C - 45 C - 50 C)	103
❑ 60 C - 65 C vehicles without ABS	104
❑ 60 C - 65 C vehicles with ABS	105
CHASSIS SELF-LEVELLING, LIFTING AND LOWERING	106
❑ Operation	106
MAIN SYSTEM COMPONENTS	106
ELECTROCOMPRESSOR	106
ELECTRONIC CONTROL UNIT	106
❑ ECU programming/setting	106
LEVEL SENSOR	107
❑ Level sensor replacement	107
❑ Removal	107
❑ Refitting	107
❑ Level sensor adjustment	107
AIR SPRING	107
❑ Air spring replacement	108
❑ Removal	108
❑ Refitting	108
LOAD SENSING VALVE	108
❑ Load sensing valve replacement	108
❑ Removal	108
❑ Refitting	108
❑ Load sensing valve adjustment on vehicle	108

	Page
REAR SUSPENSION OVERHAUL (vehicles 30 C - 35C - 40C - 45 C)	109
LEAF SPRING	109
❑ Removal	109
❑ Refitting	109
REAR SHOCK ABSORBERS	110
❑ Removal	110
❑ Refitting	110
PANHARD REACTION BAR	110
❑ Removal	110
❑ Refitting	110
REAR STABILIZER BAR	110
❑ Removal	110
❑ Refitting	110

DIAGNOSTIC

Pneumatic suspension main failures:

1 - Poor or irregular pneumatic system supply;

2 - Vehicle irregular conditions.

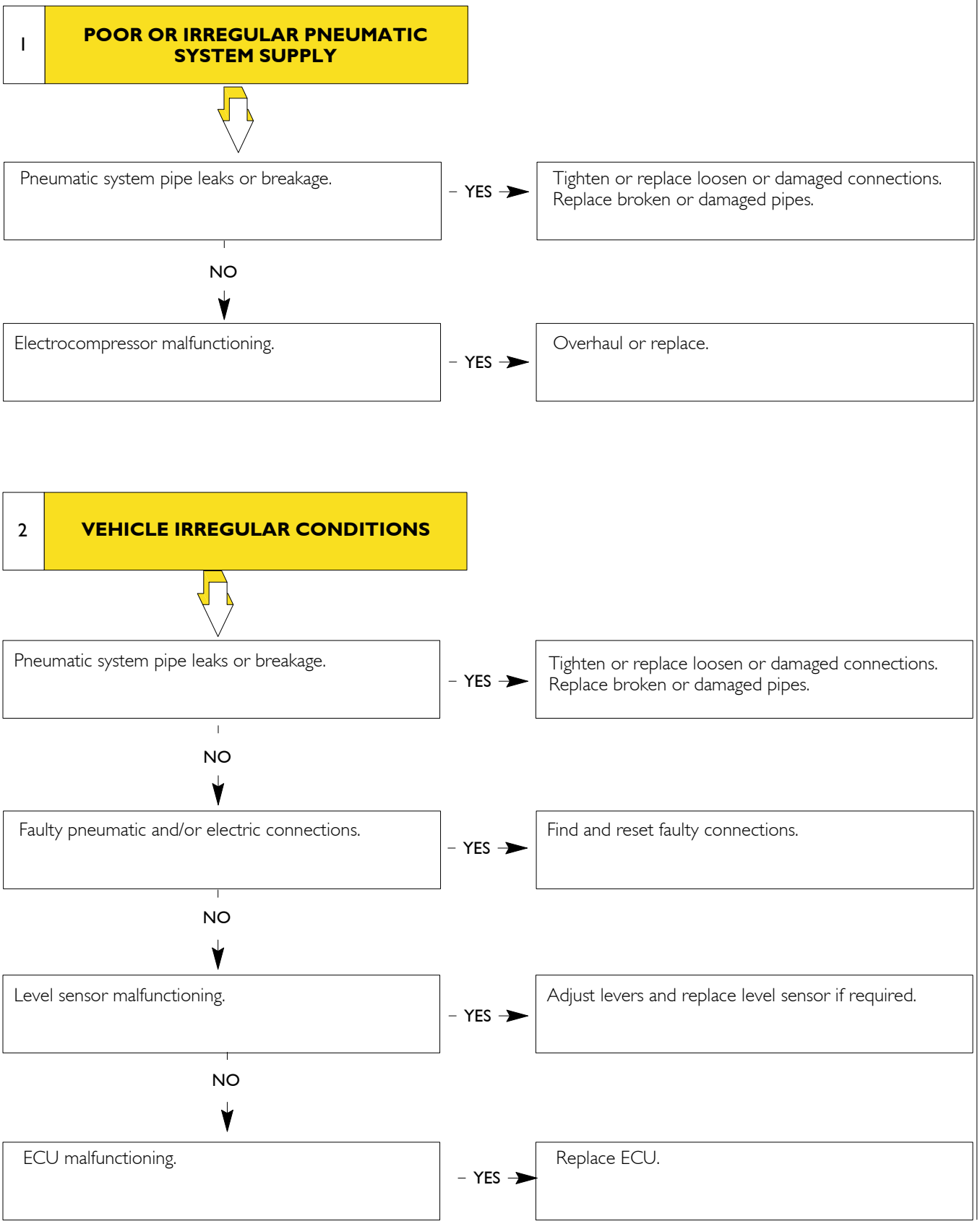

REAR PNEUMATIC SUSPENSIONS - VB-TECHNIEK TYPE

Blink - code

Blink-code led is set between the rear part of the ECU and the electrocompressor box to which it is secured.

Each time the ignition key is turned to "MAR", the led goes on and then goes off after five seconds. The following situations can then take place:

Led blinking	Failure	Check
Always OFF	Power	Fuses, power cable
Always ON	Level sensor	Sensor, levers and power cable operation
Fast blinking	Electrocompressor overload (if five minutes later the elctrocompressor restarts, failure can be due to air leak or vehicle use under overload conditions)	Air springs, compressor, pneumatic circuit
Slow blinking	Electrocompressor overload (manual lifting push button have been depressed for more than two minutes)	Never depress lifting push button for more than two minutes
Dimmed light	Light dims out if levelling push buttons are depressed at the same time or if one push button is faulty	Push buttons and wiring, never depress the push buttons at the same time

REAR PNEUMATIC SUSPENSIONS - WABCO TYPE

Certain electric or pneumatic failures can be detected through Modus or IWT.
In case of component assembling or replacement it shall be necessary to perform system setting to guarantee proper operation of the entire system.

Diagnostic connector is set on the right side of the engine compartment. Use adapter 99331043 to connect with diagnostic equipment.

According to detected failures, the red warning light set on the dashboard goes on as follows:

- ❑ FIXED LIGHT: indicates failures;
- ❑ BLINKING LIGHT: indicates electrocompressor excessive temperature

Blink-code

The Blink-Code system "displays" one failure at a time. To identify every failure stored in the ECU it is therefore necessary to repeat the code activation procedure several times.

The Blink-Code can be activated by grounding the Diagnostic socket line L (pin 2) for 2 seconds at least with ignition key set to "MAR".

Should line L be grounded for more than 5 seconds, the Blink-Code shall not be activated and ECU is reset for standard operation.

The Blink-Code consists of two figures (Tens and Units):

- ❑ Tens blinking 2 sec. (Slow)
- ❑ Units blinking 0.5 sec. (Fast)

Failure code table

FAILURE TYPE	FAILURE CODE
ECU	
Checksum errors	
Parameter error	01
Level sensor setting data error	02
ROM internal memory fault	03
WABCO data error	04
Level sensor value error	05
Pressure sensor setting data error	07
RAM memory fault	06
PIN 1 cut-off (battery power)	08
WABCO specific data	80
Internal relay valve fault	09
Vehicle speed signal (cut-off/short circuit to +Vbatt)	81
Level sensor failure: cut-off/short circuit to +Vbatt	
RH rear level sensor	10
LH rear level sensor	11
Level sensor failure: short circuit to ground	
RH rear level sensor	20
LH rear level sensor	21
Solenoid valve/relay failure: cut-off/short circuit to +Vbatt	
Compressor relay	30
LH rear compressor solenoid valve	31
RH rear compressor solenoid valve	32
Intake/exhaust solenoid valve	35
Solenoid valve/relay failure: short circuit to +Vbatt	
Compressor relay	40
LH rear compressor solenoid valve	41
RH rear compressor solenoid valve	42
Intake/exhaust solenoid valve	45
Plausibility during air bellows lifting/inflating	
RH rear level sensor	50
LH rear level sensor	51
Plausibility during air bellows lowering/deflating	
RH rear level sensor	60
LH rear level sensor	61

GENERAL

These pneumatic suspensions show high flexibility and significant vibration damping. Their main characteristic is that the distance between chassis and road level, irrespectively of vehicle load, remains constant due to the effect of the automatic adjustment of the system.

Electronic-control pneumatic suspensions are activated automatically when starting the vehicle.

Electronic-control pneumatic suspensions enable, through the proper push buttons located in the cab, to change manually the distance between chassis and road level and therefore the height of the vehicle load bed.
The following two types of pneumatic suspensions are currently adopted:

- WABCO pneumatic suspensions for 29L - 35S vehicles
- VB - Techniek pneumatic suspensions for 35C - 40C - 45C - 50C - 60C - 65C vehicles.

PNEUMATIC SUSPENSIONS - WABCO TYPE (for 29L - 35S vehicles)

WABCO system in addition to known advantages offered by pneumatic suspension, enables the following:

- significant air consumption reduction;
- ready response to the different adjustment processes;
- friendly systems;
- high safety performance;
- complete system diagnostic.

The WABCO system controls automatically the rated level of vehicle pneumatic suspensions.

The above mentioned operations are bound to preset operating conditions and to the relevant system safety requirements.

The ECU controls automatically the chassis level (distance from road level), through the real values provided by sensors and compares these values to the rated ones stored in its memory.

If the driving position is changed, the electronic control unit governs the electro-pneumatic assemblies, by means of which the actual level is corrected in relation to the nominal level set or saved by the driver.

Figure 1

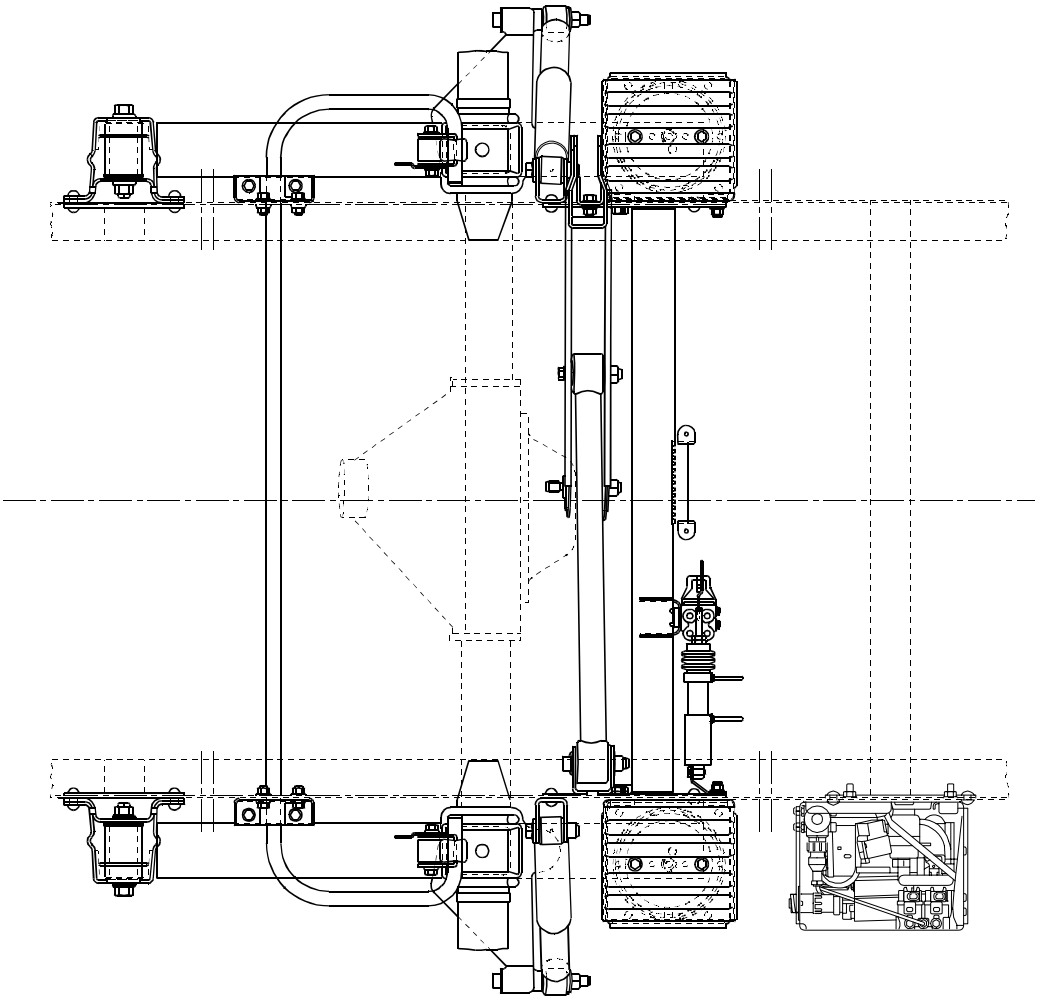

62350

Figure 2

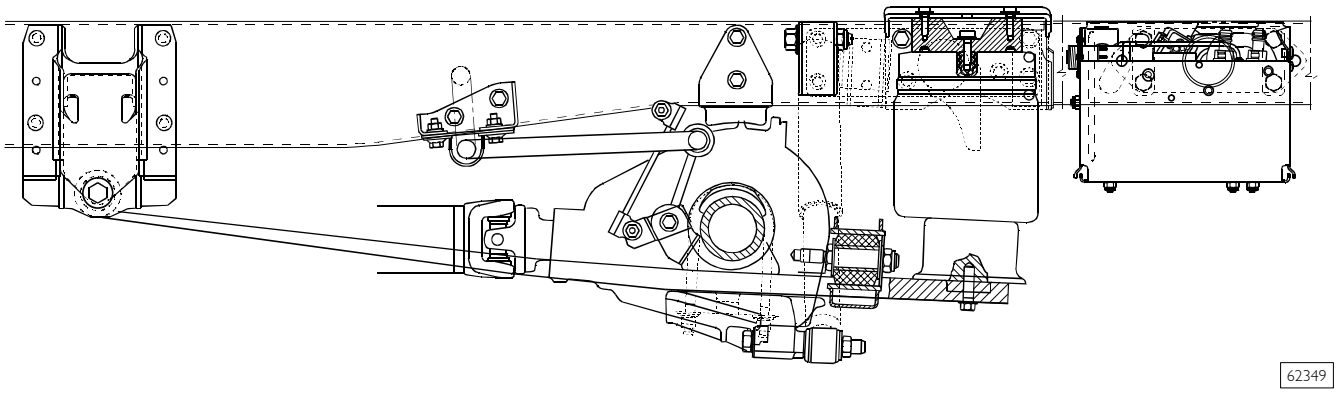

SPECIFICATIONS AND DATA

Air system components

COMPONENT	
Pneumatic supply unit	
❑ Type: WABCO 415 403 402 0	
Operating temperature	- 30°C to 65°C
Max. operating pressure	12.7 bar
Rated voltage	12V DC
Pressure control	14 to 17.1 bar
Level sensors	
❑ Type: WABCO 441 050 012 0	
ECU	
❑ Type: WABCO 446 055 450 0	
Rated voltage	12V
Double circuit load sensing valve (vehicles without ABS)	
❑ Type : BOSCH NM/FV/98-347 (ref. 796803)	
Ratio	0.15
Pneumatic actuator	
❑ Type : ELLENA EE6492	
Operating temperature	- 20°C to 80°C
Operating pressure	max 8 bar
Air tank (litres)	31
Rear air spring (Mod. 29 L - 35 S)	
Max. diameter	171 mm
Min. length	350 mm
Max. length	150 mm

Rear leaf spring

		mm
		N° 2
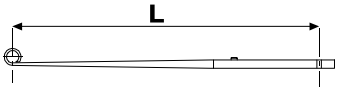	Spring length (measured between eye centre and air spring connection)	1073 ± 6
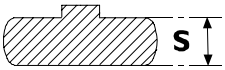	Leaf thickness (measured at the securing point to rear axle)	24 ± 0.3
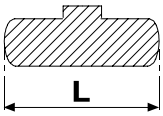	Leaf width	80 ± 0.5
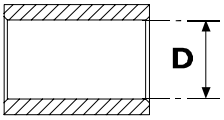	Bush seat inner diameter	$40^{-0,05}_{-0,2}$
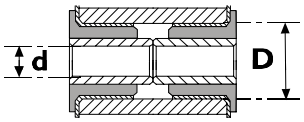	D = bush outer diameter d = bush inner diameter	$40.2^{0}_{-0.15}$ $16.5^{+0,2}_{-0}$

Rear shock absorbers

			Mannesmann Sachs	ARVIN MERITOR	
	Length between eye centres:				
	Open	mm	460 ± 3	460 ± 3	480 ± 3
	Closed	mm	315 ± 3	315 ± 3	315 ± 3
	Stroke	mm	145	145	165

Stabilizer bar

Models:	29 L - 35 S
Stabilizer bar diameter (mm)	20

Levelling and height values

Suspension condition	Distance between upper chassis edge and road level (mm)	Max. distance (mm)
Max. height	620	+ 40
Self-levelling	580	-
Min. height	520	- 60

ELECTRIC SYSTEM WABCO (ECAS)

Figure 3

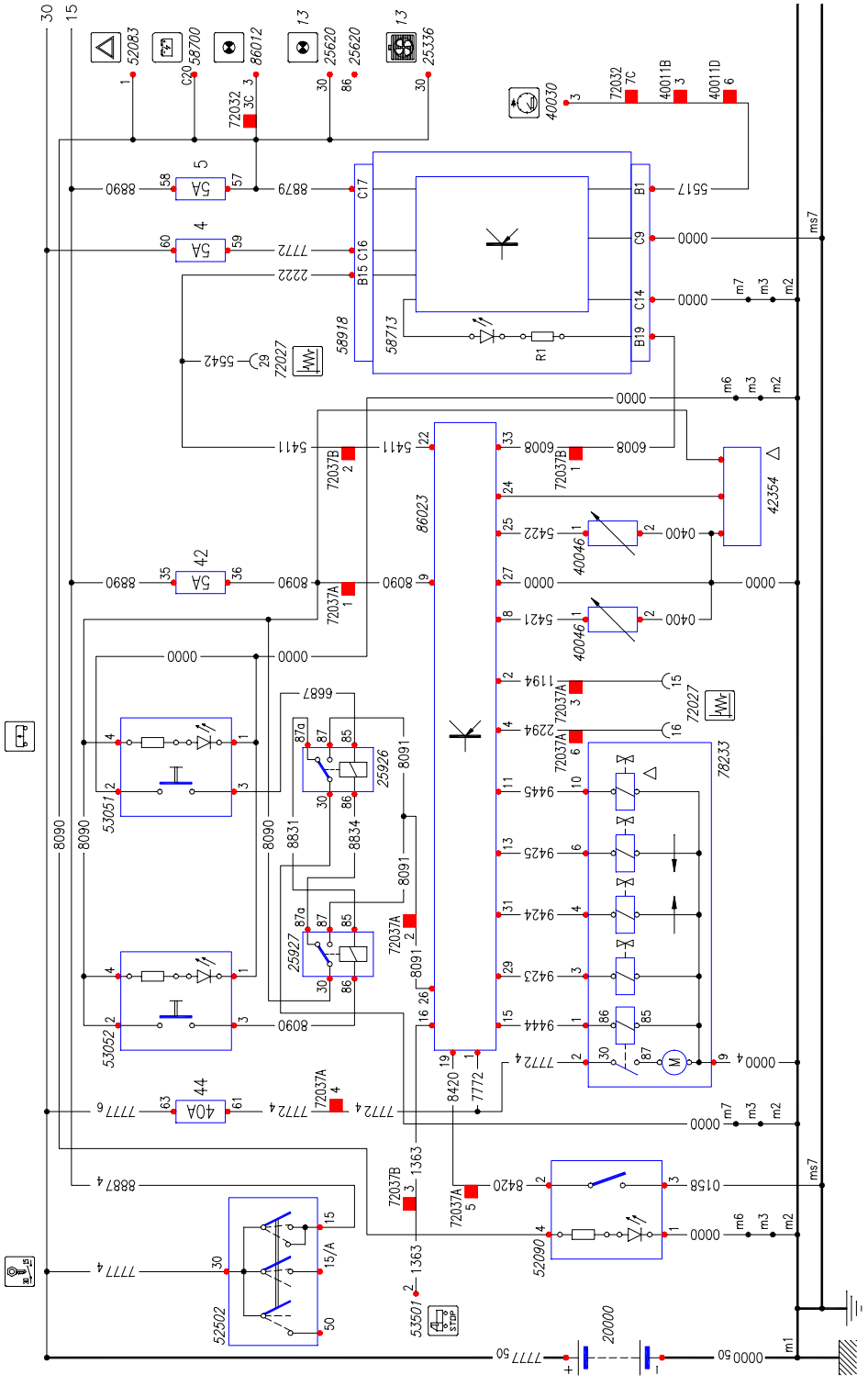

Legend

20000	Battery
25926	Relay for enabling suspension lifting and stopping the lowering function
25927	Relay for enabling suspension lowering and stopping the lifting function
42354	Pneumatic suspension system failure switch
52090	Suspension levelling switch
52502	Key switch
53051	Suspension lifting control switch
53052	Suspension lowering control switch
58713	Failure warning led
58918	Board with 32 optical indications plus instruments
78233	Vehicle lifting solenoid valve unit
86023	Vehicle lifting/lowering control unit

PNEUMATIC SYSTEM WABCO (ECAS)

Electronic-control

Vehicles: 29 L - 35 S

Figure 4

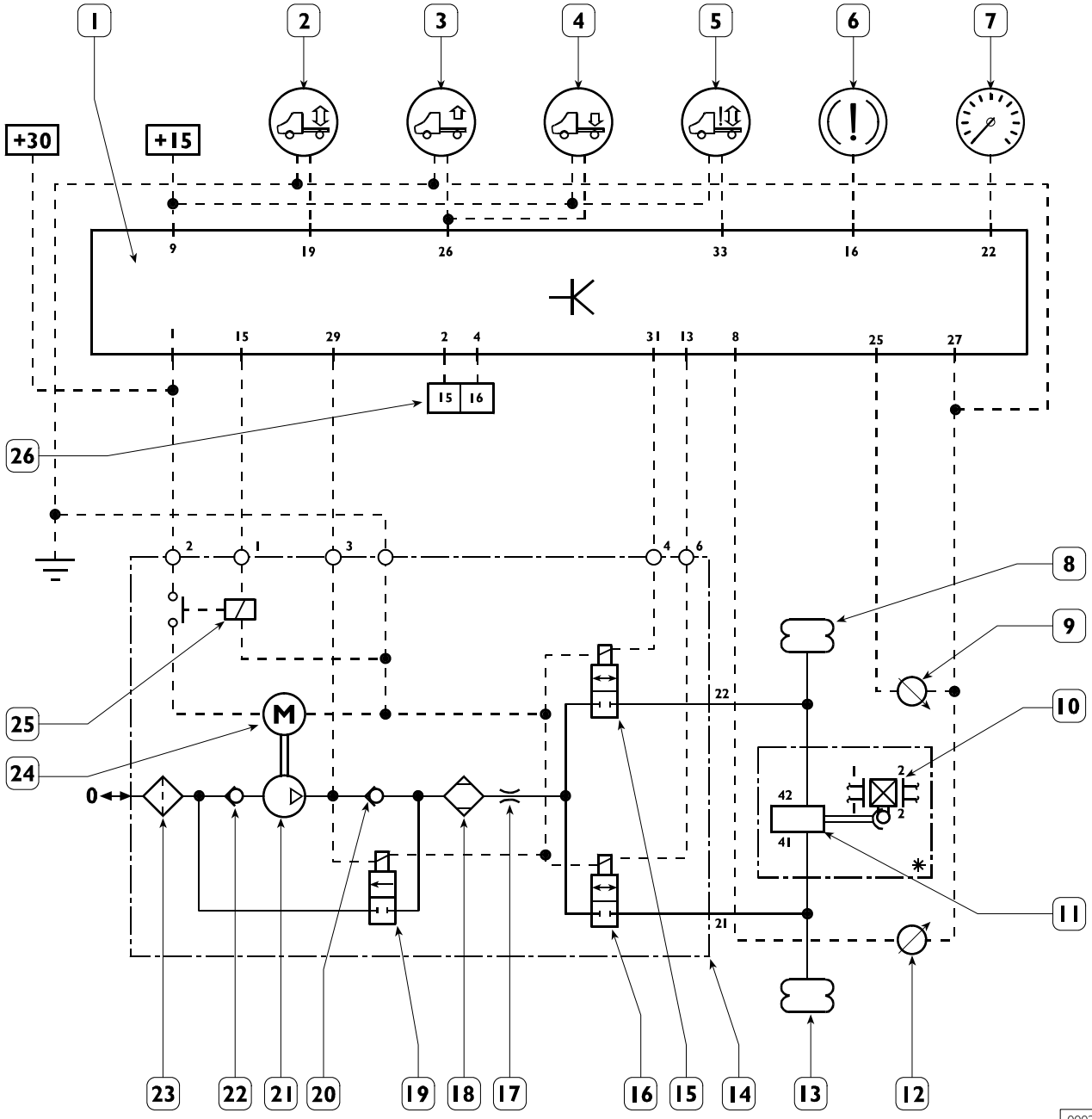

Legend

1 - ECU (ECAS).
2 - Manual chassis levelling control switch.
3 - Chassis lifting control switch.
4 - Chassis lowering control switch.
5 - Warning light ECAS.
6 - Stop light switch.
7 - Speedometer - tachograph.
8 - Right air spring.
9 - Right level sensor.
10 - Hydraulic load sensing valve*.
11 - Load sensing valve control pneumatic cylinder*.
12 - Left level sensor.
13 - Left air spring.
14 - Electrocompressor and distribution valve unit.
15 - Right chassis control solenoid valve.
16 - Left chassis control solenoid valve.
17 - Choke valve.
18 - Drier filter
19 - Air spring discharge solenoid valve.
20 - One-way valve.
21 - Compressor.
22 - One-way valve
23 - Intake filter.
24 - Compressor motor
25 - Motor control relay
26 - Diagnosis socket
* - For vehicles without ABS only.

PNEUMATIC SYSTEM ON VEHICLE

Vehicles without ABS

Figure 5

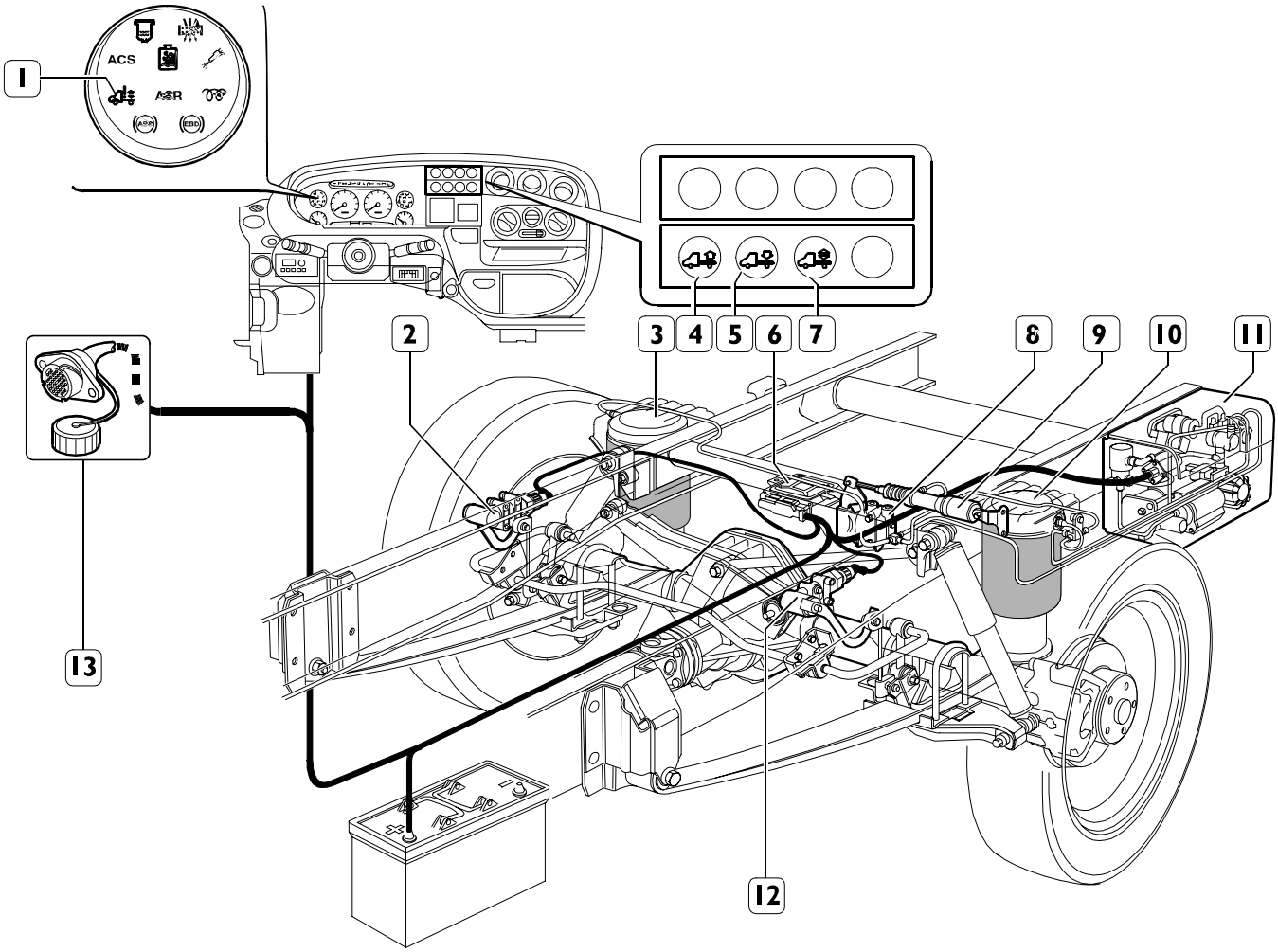

Legend

1 - Warning light.
2 - Right level sensor.
3 - Right air spring.
4 - Chassis lifting control push button.
5 - Chassis lowering control push button.
6 - ECU.
7 - Manual chassis levelling control push button.
8 - Hydraulic load sensing valve.
9 - Load sensing valve control pneumatic cylinder.
10 - Left air spring.
11 - Pneumatic supply unit.
12 - Left level sensor.
13 - Centralised diagnostic socket.

Vehicles with ABS

Figure 6

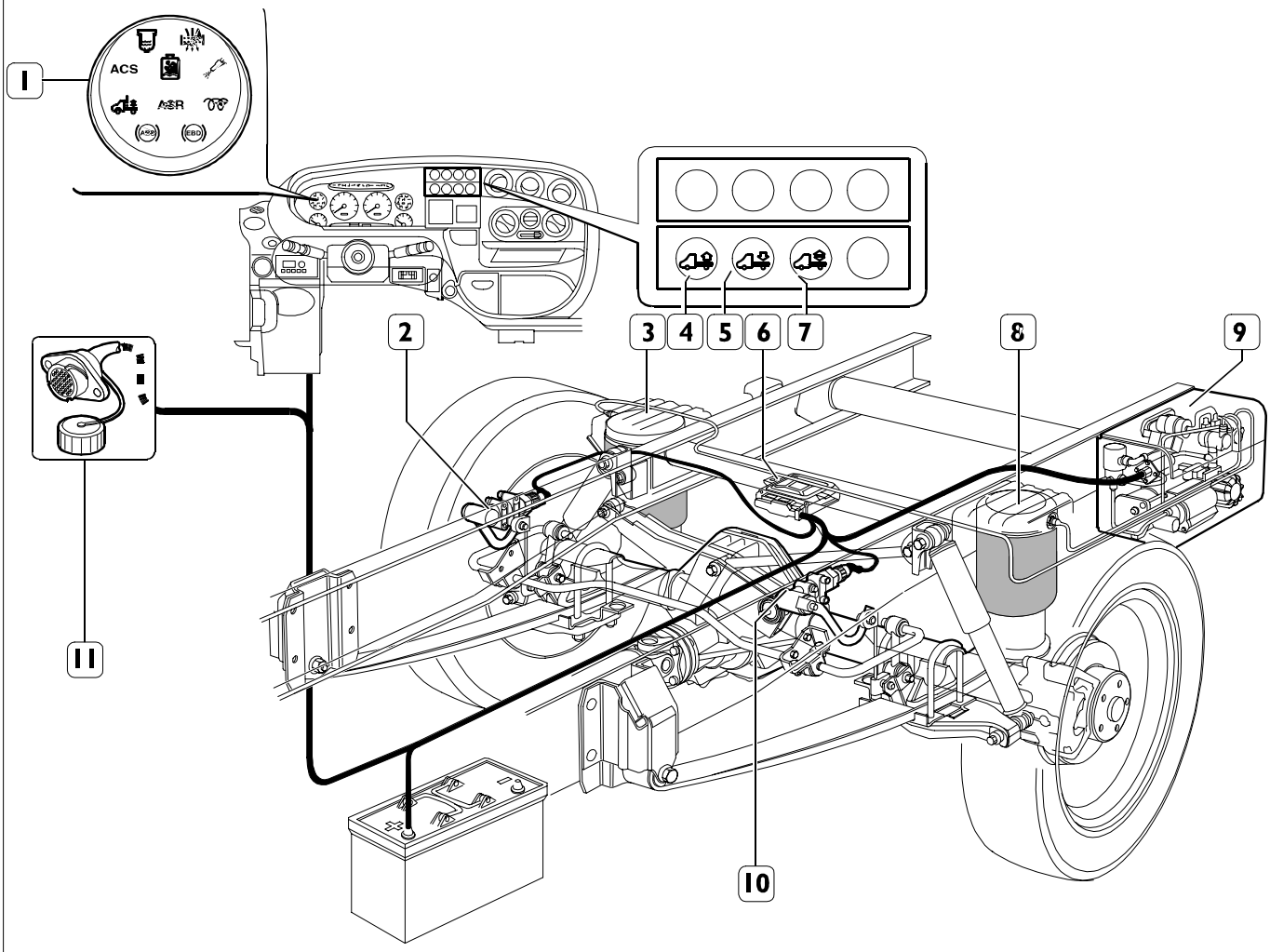

Legend

1 - Warning light.
2 - Right level sensor.
3 - Right air spring.
4 - Chassis lifting control push button.
5 - Chassis lowering control push button.
6 - ECU.
7 - Manual chassis levelling control push button.
8 - Left air spring.
9 - Pneumatic supply unit.
10 - Left level sensor.
11 - Centralised diagnostic socket.

CHASSIS SELF-LEVELLING, LIFTING AND LOWERING

Figure 7

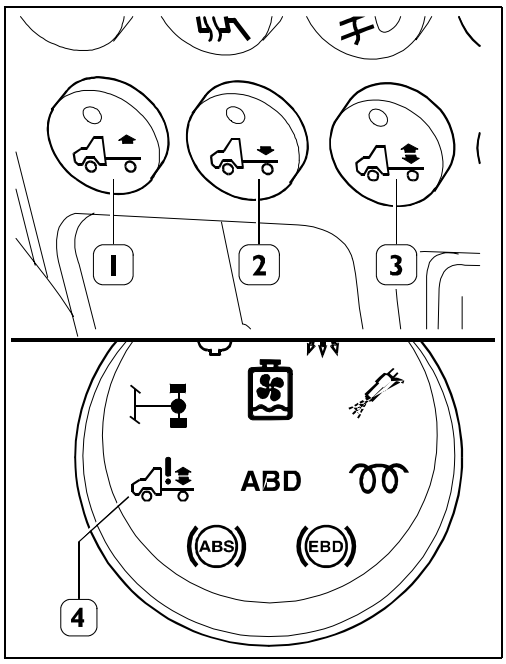

62355

Operation

The system consists of the following:

- Pneumatic supply unit (electrocompressor, solenoid valve unit);
- One ECU;
- Two level sensors;
- Two air springs;
- Three levelling push buttons (1, 2, 3);
- One warning light (4).

Level sensors send to ECU the signals corresponding to chassis-road distance. The ECU processes these signals, generates accordingly activation signals and sends them to the electrocompressor.

Turn the ignition key to "MAR" and depress push buttons (1, 2, 3) for lifting, lowering or activating the self-levelling function of the chassis.

This system enables vehicle running up to 20 km/h under whatever height and level condition. When this speed is exceeded, chassis automatic levelling is activated.

Variation operations are indicated by warning light (4) blinking.

MAIN SYSTEM COMPONENTS

790560 PNEUMATIC SUPPLY UNIT

Specifications and data

Type	Wabco
Lubrication	Dry operation
Max. operating pressure	12.7 bar
Operating temperature	-30 C° to 65° C
Rated voltage	12V DC

Figure 8

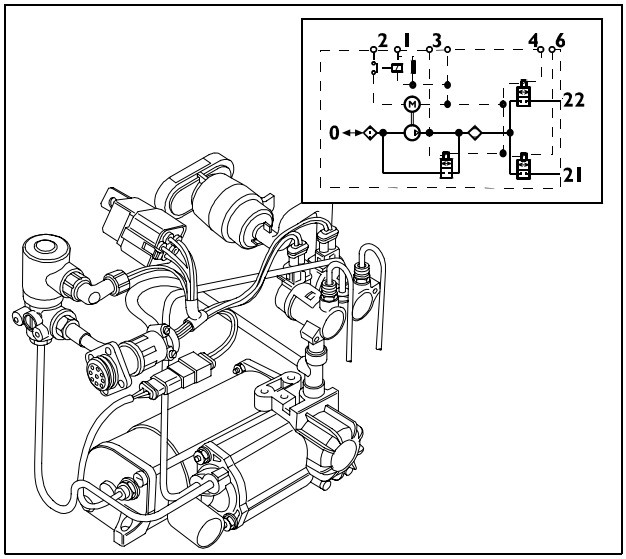

62356

This unit produces the compressed air required to supply the pneumatic system and enables to bleed air from the pneumatic system to lower the load bed.

766175 ELECTRONIC CONTROL UNIT

Figure 9

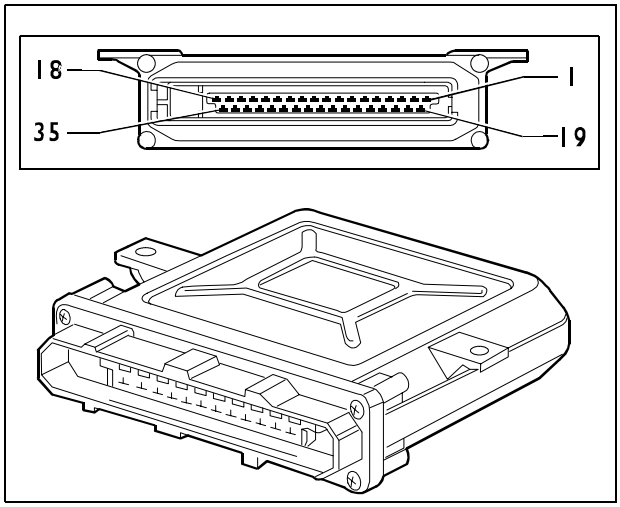

62357

The ECU is the mastermind of the system.

It controls every logic function of suspensions under both static and dynamic stage.

ECU receives signals from the control switches set in the cab and lifts and lowers the load bed accordingly. It also receives signals from the level sensors and controls the electrocompressor and the air spring to keep the vehicle in the self-levelling condition.

ECU indicates any system failure through the dedicated warning light set on the instrument panel.

ECU programming/setting

WABCO ECU is not requiring programming since it is supplied already programmed.

Setting can be performed by MODUS, IWT and IT2000 diagnostic systems and shall be performed when replacing the following:

- ECU;
- level sensor;
- level sensor levers.

Connect the diagnostic tool to the 38-pin socket and proceed as follows to obtain correct setting:

- check and adjust to 110 mm the level sensor lever length, if required;
- lift the chassis by depressing the proper video push button (max. lifting);
- position the proper spacers between chassis and rear axle;
- lower the chassis completely by depressing the proper video push button (max.lowering);
- set ECU by depressing the proper video push button.

768822 LEVEL SENSOR

Figure 10

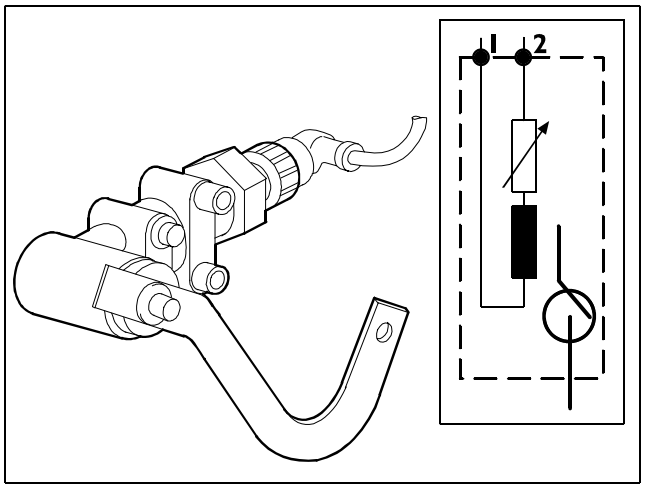

62358

Level sensors inform constantly the ECU on distance changes between chassis and road level.

Level sensors consists of a coil secured to the chassis and a small piston.

When chassis height changes, a cam and a lever linked to the axle make the piston move inside the coil, thus modifying its inductance.

These changes will be used by the ECU in the different stages of the system.

Level sensor replacement

Removal

Figure 11

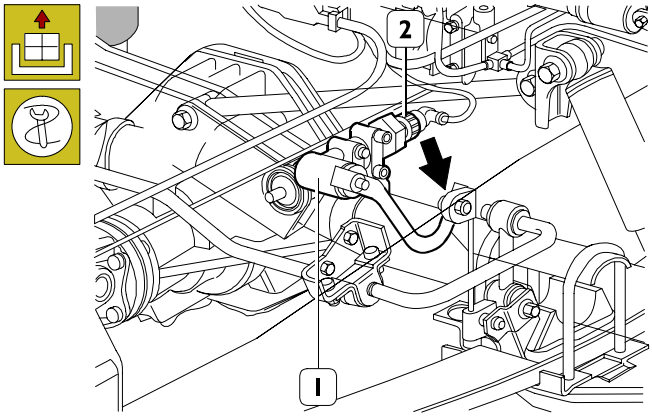

62460

Disconnect the electrical connection (2), loosen the screw (⇒) and disconnect the levers. Loosen the fastening screws and remove the level sensor (1).

Refitting

Reverse removal operations to perform refitting.

Perform level sensor and ECU setting as shown in the relevant paragraphs "ECU programming/setting" and "Level sensor adjustment".

Level sensor adjustment

Figure 12

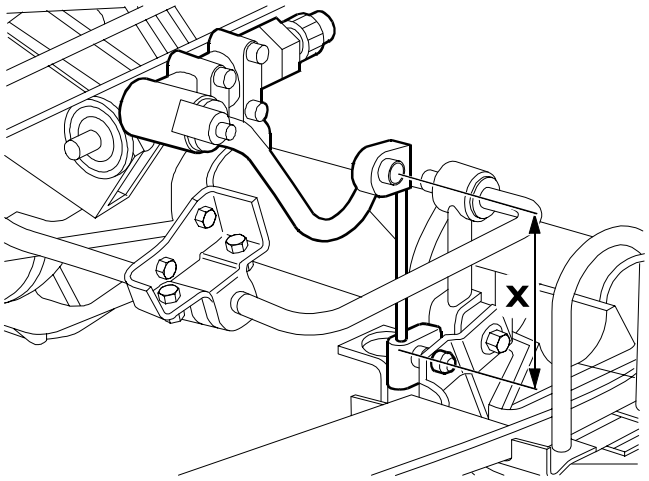

62584

Operate on adjustment screws and set relay lever X value to 110 mm.

Perform ECU setting as shown in the relevant paragraphs "ECU programming/setting".

500731 AIR SPRING

Figure 13

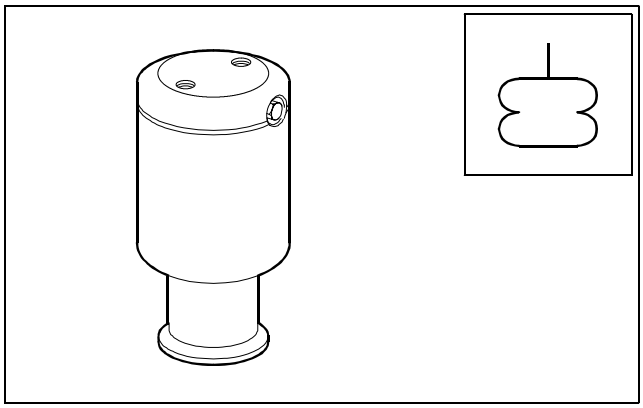

62359

Air spring is an elastic element dedicated to contain pressure air and to change its extension irrespectively of the applied load.

Air spring replacement
Removal

Figure 14

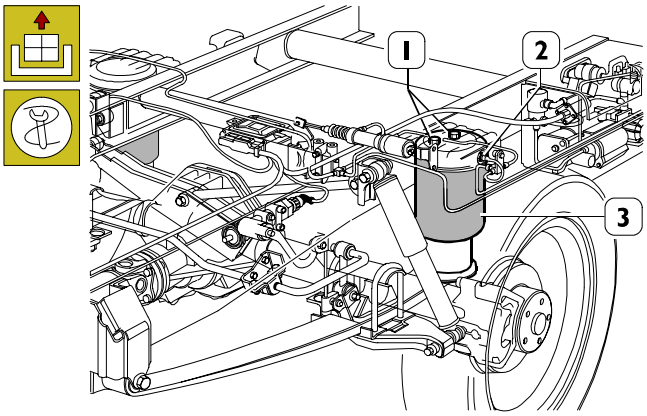

62360

Position the vehicle on level ground.

Lift the rear part of the vehicle and rest the chassis on the proper stands.

Use the hydraulic jack to support the rear axle.

Bleed the system and disconnect the air spring (3) supply pipe (2).

Loosen upper (1) and lower fastening nuts.

Lower the rear axle and remove the air spring (3).

Refitting

Reverse removal operations to perform refitting.

784310 LOAD SENSING VALVE

Figure 15

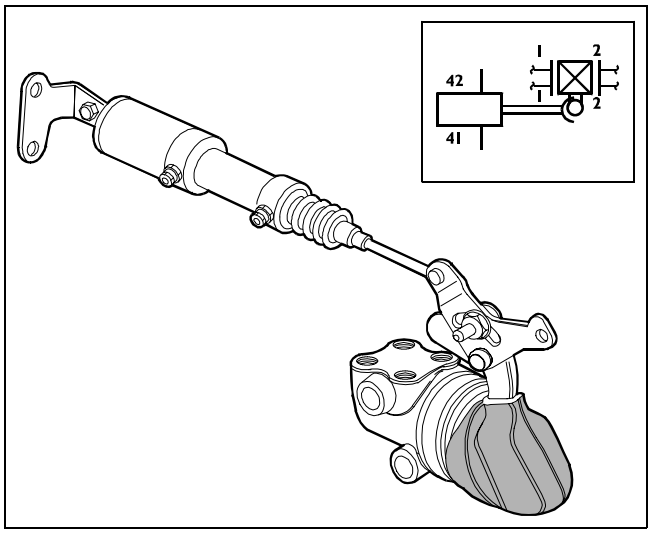

62361

Vehicles not fitted with ABS/EBS/ABD systems have been provided with the following components to obtain brakeforce distribution:

- double circuit load sensing valve;
- load sensing valve pneumatic actuator.

The load sensing valve controls automatically the braking torque produced by brakes on the rear axle, according to the load applied on the rear axle, measured and transferred to the load sensing valve of the pneumatic actuator.

The following diagram shows the brakeforce distribution ratio corresponding to 0.15 as a function of pneumatic pressure change inside air springs.

Figure 16

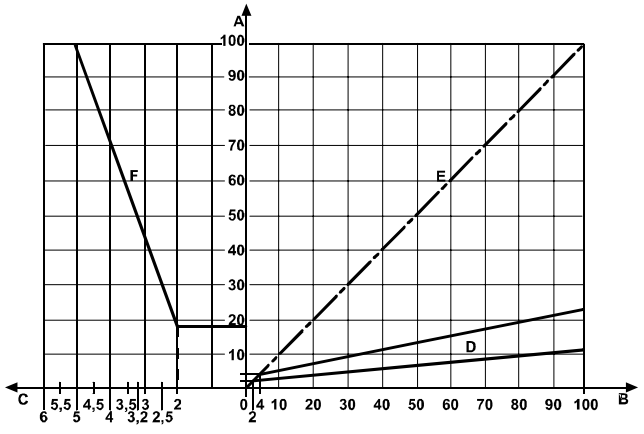

62362

Legend

A	Hydraulic output pressure in bar;
B	Hydraulic control pressure in bar;
C	Pneumatic control pressure in bar;
D	Characteristic curves, 0.15 ratio (without load);
E	1:1 ratio (with load);
F	Pneumatic pressure/load characteristic curves.

Load sensing valve replacement
Removal

Figure 17

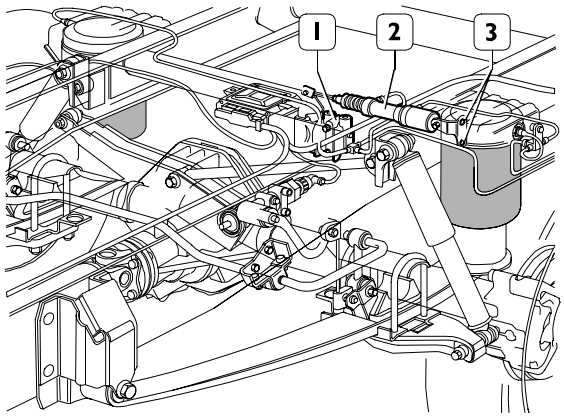

Bleed the system, loosen the screws (3) and disconnect the pneumatic actuator (2).
Loosen the fastening screws of the load sensing valve (1) and remove it including the pneumatic actuator (2).

Refitting

Reverse removal operations to perform refitting.

Perform load sensing valve adjustment as shown in the relevant paragraphs "Load sensing valve adjustment on vehicle".

Load sensing valve adjustment on vehicle

This device shall be checked and adjusted, if required, at regular intervals by checking the values indicated on the plate (Figure 18) located on the internal part of the engine hood.

Should the plate or the relevant technical data be missing, ask the manufacturer for a duplicate specifying the following:

- ❑ Vehicle type and wheelbase
- ❑ Rear axle weight
- ❑ Load sensing valve No.

Figure 18

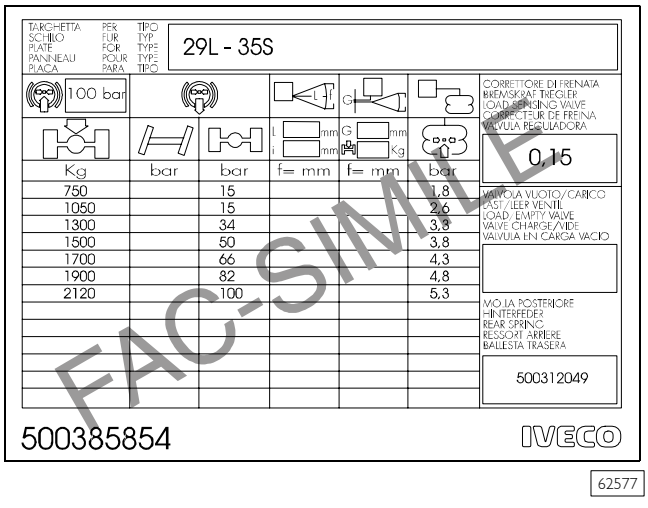

LOAD SENSING VALVE PLATE

Perform required operations in the following sequence:

- ❑ position the vehicle with the rear wheels set on the brake test bed 99336914;
- ❑ connect gauges 99372269 or Modus to pressure control intakes set upstream and downstream connector;
- ❑ should gauges not be fitted with valves for automatic bleeding, bleed air by loosening the suitable ring nuts

Figure 19

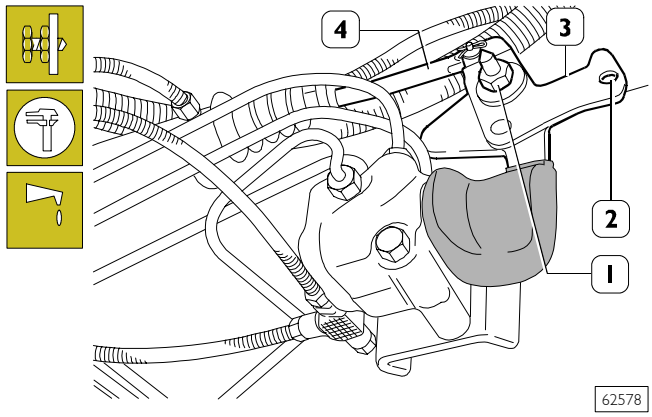

- ❑ Loosen nut (1);
- ❑ apply 5 kg to plate (3) in point (2);
- ❑ start engine;
- ❑ disconnect the pneumatic actuator (4);
- ❑ with engine running at idle, depress the brake pedal gradually until obtaining 100 bar pressure read on the gauge set upstream connector. This value shall be constant and shall be read on vehicle with load and without load;
- ❑ simulate the fully laden condition by lifting completely the relay lever (3) and the unloaded condition by lowering the lever completely;
- ❑ read output pressure value under both vehicle conditions (laden and unloaded); obtained values shall comply with those indicated on the plate, otherwise replace the load sensing valve;
- ❑ operate the relay lever (3) to check whether the load sensing valve piston is sliding smoothly into its seat, otherwise replace the load sensing valve;
- ❑ reconnect the pneumatic actuator (4);
- ❑ load the vehicle to obtain 1500 kg weight on the rear axle evenly distributed on the right and left side of the vehicle with ± 5 kg tolerance;
- ❑ with engine running at idle and 100 bar pressure read on the gauge set upstream the connector, check whether the output pressure value read on the gauge set downstream the connector is corresponding to the values indicated on the plate, otherwise replace the load sensing valve;
- ❑ stop the vehicle, tighten nut (1) to the specified torque and remove applied loads.

Perform this check with gradually increasing pressure.

To check the load sensing valve, every braking system component shall be in perfect operating conditions. When replacing the leaf spring for special set-up, a new plate is required with properly corrected values.

- ❑ when tests are over, check brake performance.

FAC-SIMILE

500730 REAR SUSPENSION OVERHAUL

500450 LEAF SPRING

Removal

Figure 20

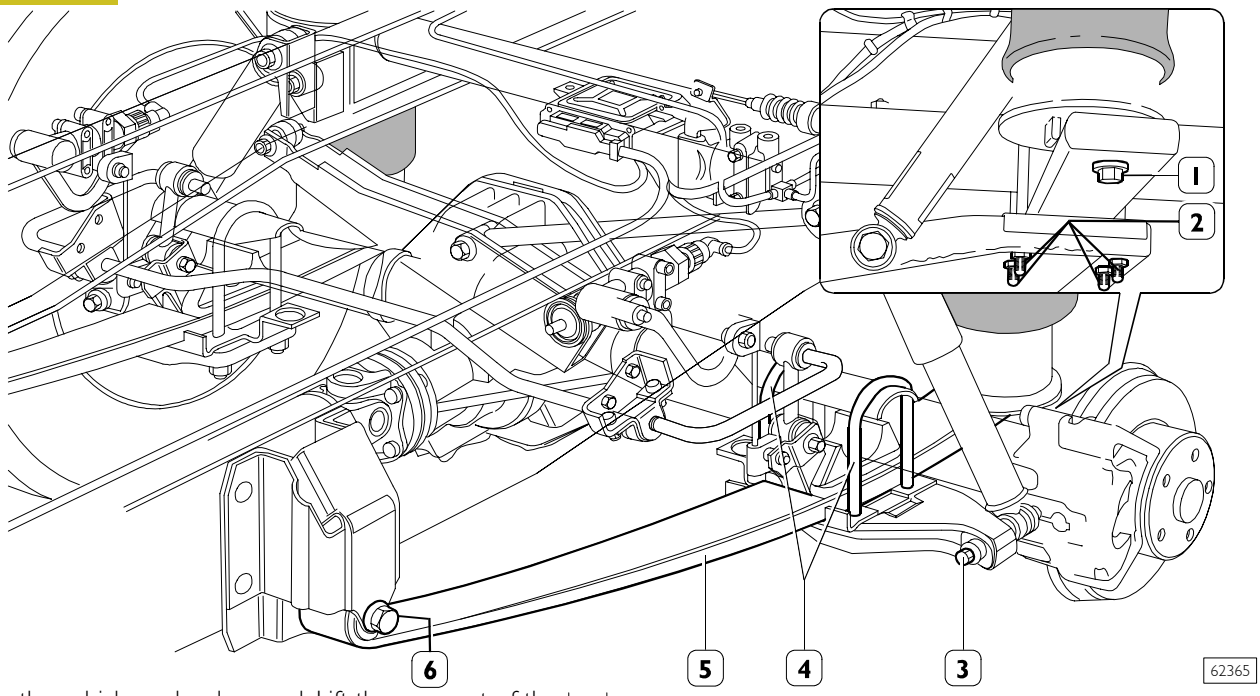

Position the vehicle on level ground. Lift the rear part of the vehicle and rest the chassis on the proper stands. Use the hydraulic jack to support the rear axle.
Bleed the system, remove the wheel, loosen the air spring lower fastening screw (1). Loosen shock absorber lower fastening nut (3) and disconnect it.
Loosen nuts (2) and remove the U bolts (4) and the elements securing the leaf spring to the rear axle.
Loosen and remove the pin (6) and remove the leaf spring (5).

Refitting

Reverse removal operations to perform refitting.

500940 REAR SHOCK ABSORBERS

Removal

Figure 21

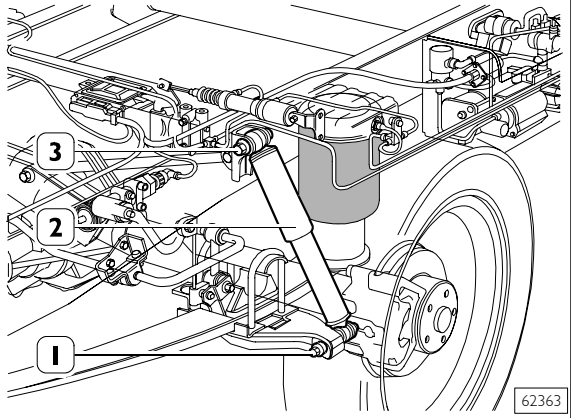

Lift the rear part of the vehicle and use the jack to support the rear axle. Loosen the upper (3) and the lower (1) fastening nuts and remove the shock absorber (2).

Refitting

Reverse removal operations to perform refitting.

528960 REAR STABILIZER BAR

Removal

Figure 22

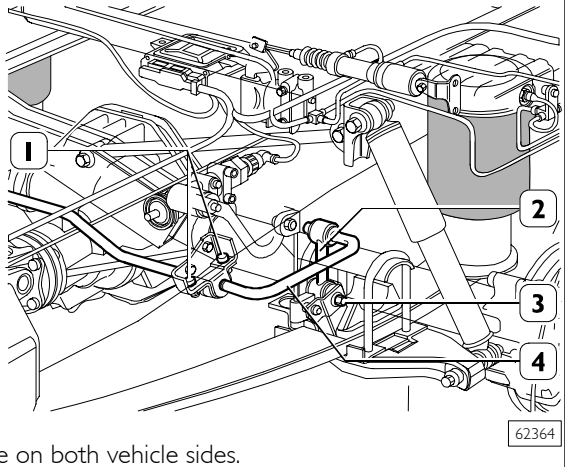

Operate on both vehicle sides.
Loosen the screws (1) and the nut (3). Remove the stabilizer bar (4) including the joints (2).

Refitting

Reverse removal operations to perform refitting.

PANHARD REACTION BAR
Removal

Figure 23

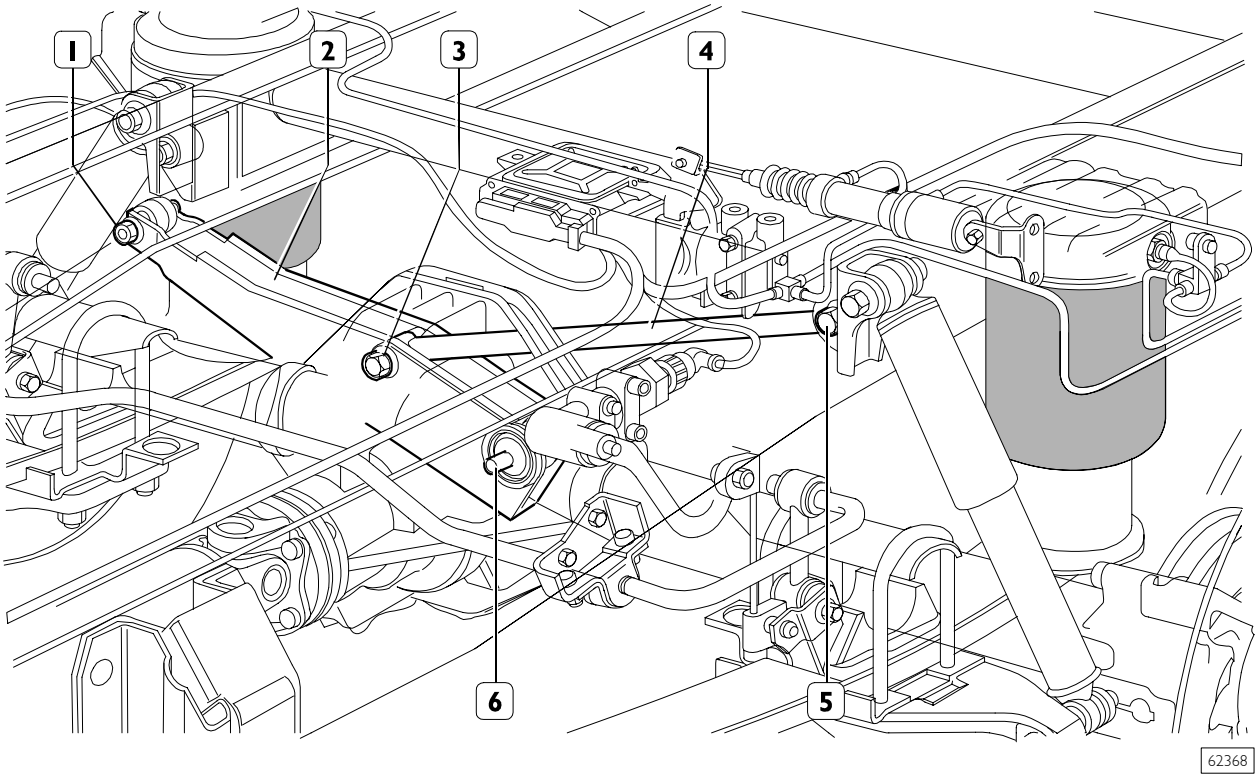

Loosen the "Panhard" reaction bar (4) fastening screws (3 and 5) and remove it.

Loosen the relay rod (2) fastening screws (1 and 6) and remove it.

Refitting

Reverse removal operations to perform refitting.

AIR SUSPENSIONS TYPE VB-TECHNIEK (for vehicles 35C - 40C - 45C - 50C - 60C - 65C)

GENERAL INFORMATION

The VB - TECHNIEK system is controlled by an electronic control unit that keeps the settings, depending on the signals sent by the level sensors, in all working conditions.

A supply unit, which includes all the appliances, distributes and discharges the air from the springs.

For vehicles with no ABS, there is a braking load apportioning valve, governed by an air-operated actuator.

With each start, the control unit runs a test on all the system components and when the handbrake is released it restores the set driving position.

It is possible, with the vehicle stationary and the handbrake engaged, to lift or lower the chassis frame. During these operations, a red light on the dashboard warns of not being in the driving position.

Suspension assembly diagram (for vehicles 35C - 40C - 45C - 50C)

Figure 24

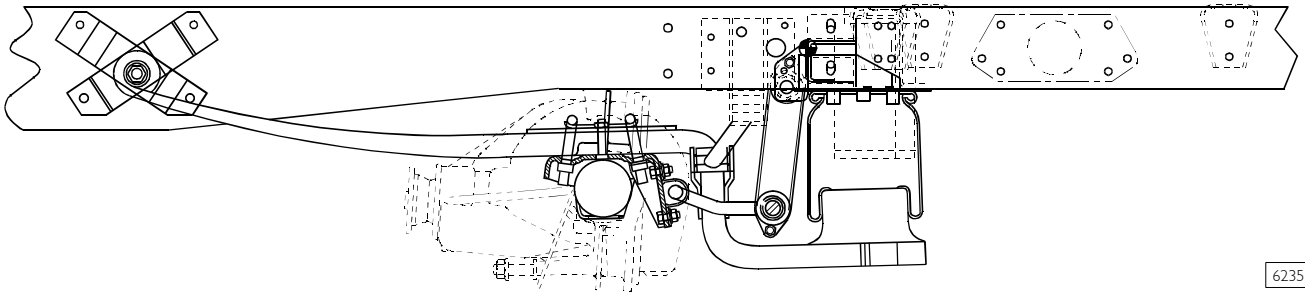

62351

Figure 25

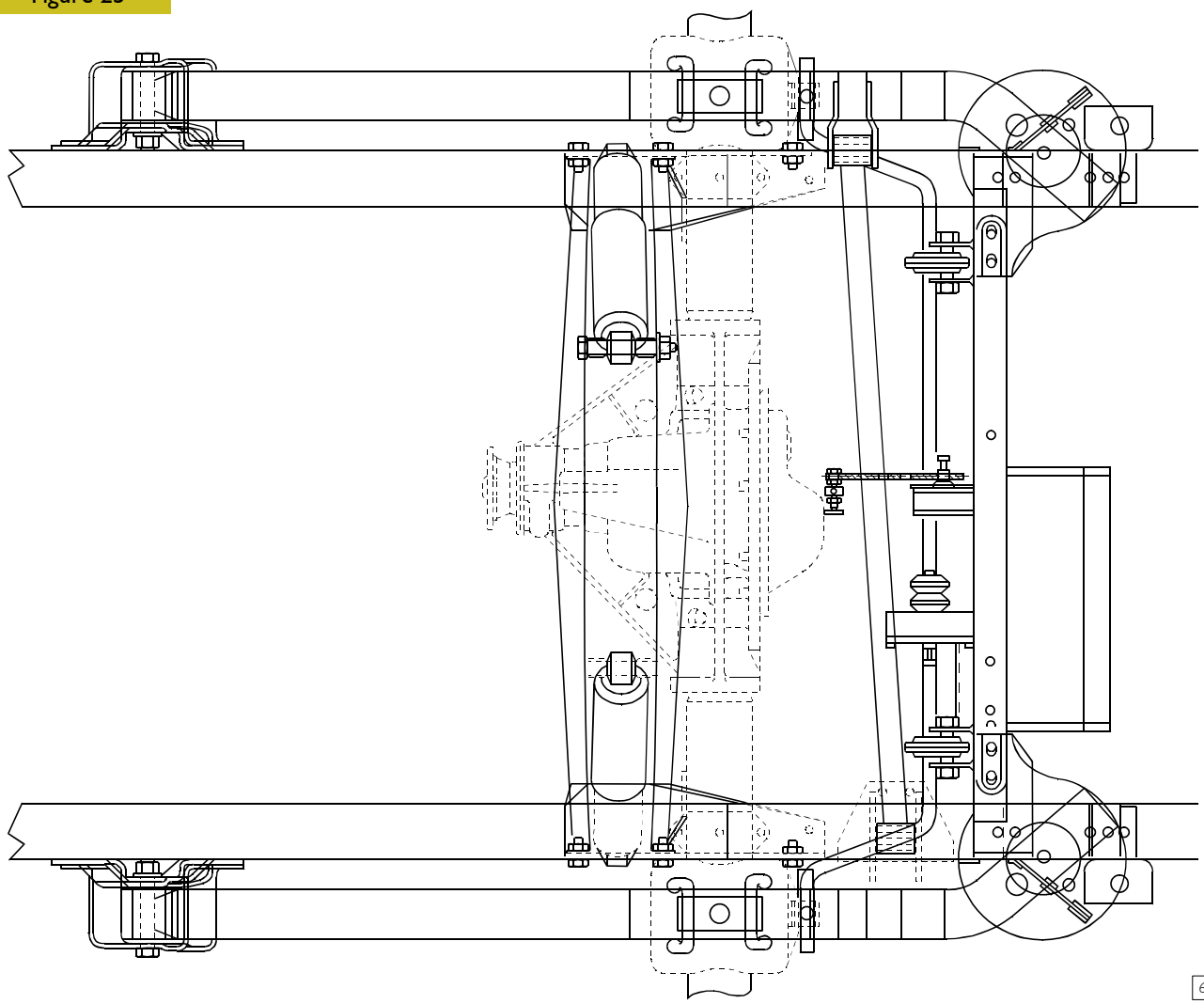

62435

SPECIFICATIONS AND DATA

Pneumatic system (for vehicles 35 C - 40 C)

COMPONENT		
Air supply unit		
❑ Type: VB TECHNIEK		1252131010
Level sensor		
❑ Type: VB TECHNIEK		1252091020
ECU		
❑ Type: VB TECHNIEK		125212050
Single-circuit load sensing valve (vehicles without ABS)		
❑ Type: BOSCH		0204031150
Ratio		0.25
Pneumatic actuator (for vehicles with no ABS)		
❑ Type: VB TECHNIEK	(for vehicles 35 C - 40 C) (for vehicles 45 C - 50 C)	1252081065 1252081070
Rear air spring		
❑ Type: VB TECHNIEK		1252030070
Max. diameter		240 mm
Min. length		- mm
Max. length		- mm
Air tank		-

Rear leaf spring (vehicles 35 C - 40 C)

		mm
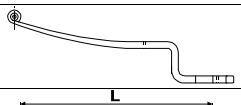	Single blade ❑ Type: VB TECHNIEK 1252011575	N° 2
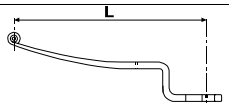	Leaf length (measured between eye centre and air spring connection)	1080
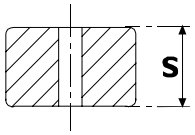	Leaf thickness (measured at the securing point to rear axle)	35
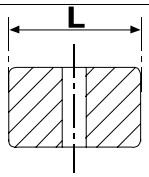	Leaf width	60
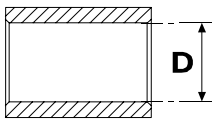	Bush seat inner diameter	39

Rear leaf spring (vehicles 45 C - 50 C)

		mm
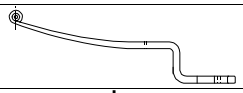	Twin blade ❑ Type: VB TECHNIEK 1252011585	N° 2
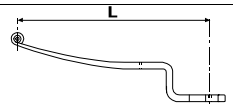	Leaf length (measured between eye centre and air spring connection)	1080
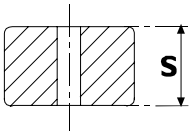	Leaf thickness (measured at the securing point to rear axle)	-
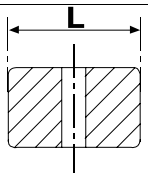	Leaf width	60
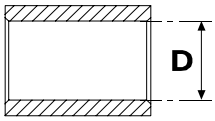	Bush seat inner diameter	39

Rear shock absorbers

	Length between eye centres:	
	Open	460
	Closed	320
	Stroke	140

Stabilizer bar

Models:	35 C - 40 C - 45 C - 50 C
Stabilizer bar diameter (mm)	18

Levelling and height values

Suspension condition	Distance between upper chassis edge and road level (mm)	Max. distance (mm)
Max. height	640	+ 60
Self-levelling	580	-
Min. height	550	- 30

VB TECHNIEK ELECTRIC SYSTEM

Figure 26

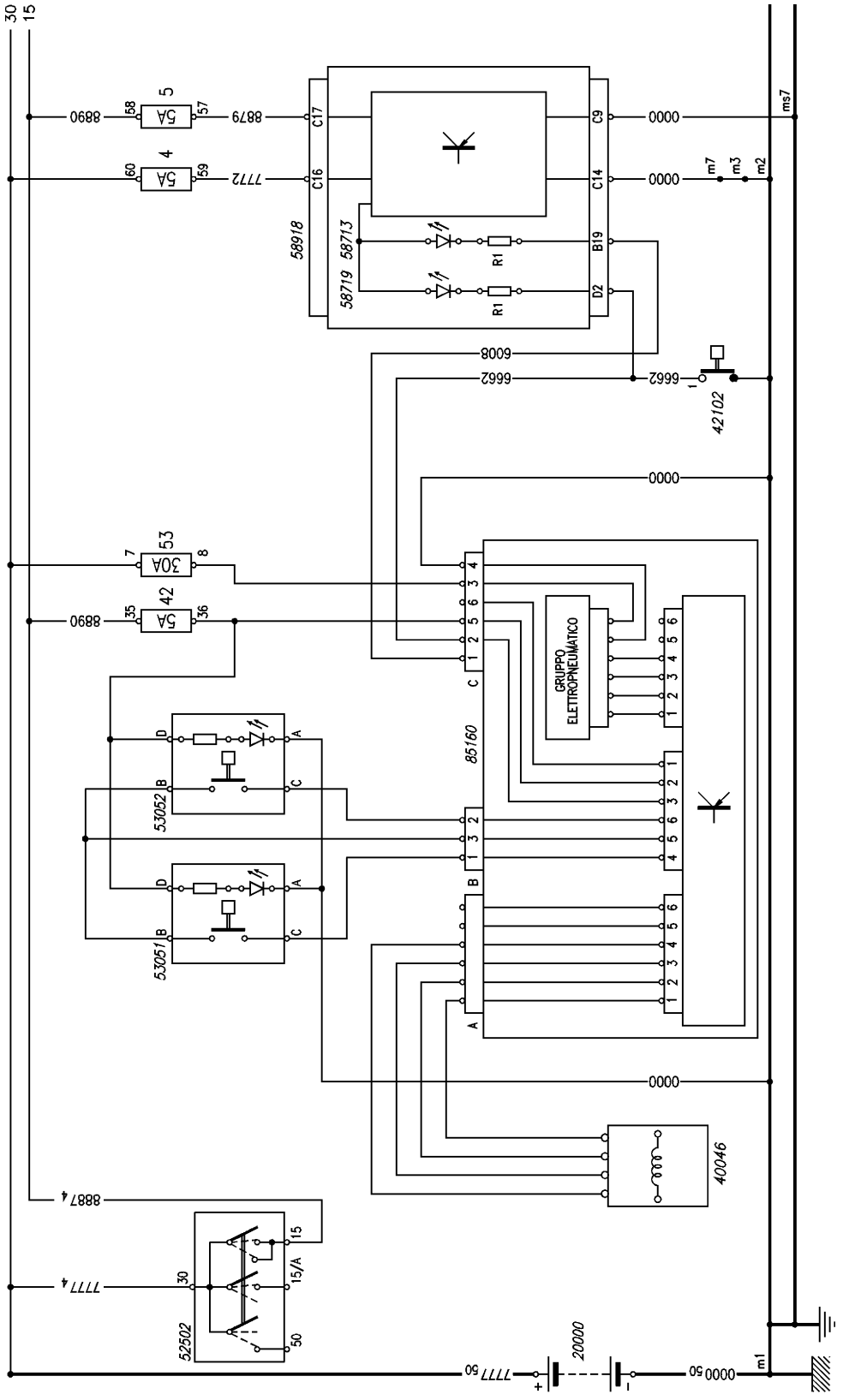

Legend

20000	Battery	53052	Suspension lowering control switch
40046	Inductive type level sensor	58713	Failure warning led
42102	Hand brake ON switch	58719	Hand brake ON warning led
52052	Key switch	58918	Board with 32 optical indications plus instruments
53051	Suspension lifting control switch	85160	Chassis setup change control device

PNEUMATIC SYSTEM

VB TECHNIEK Electronic–control pneumatic suspensions

Vehicles: 35 C – 40 C – 45 C – 50 C

Figure 27

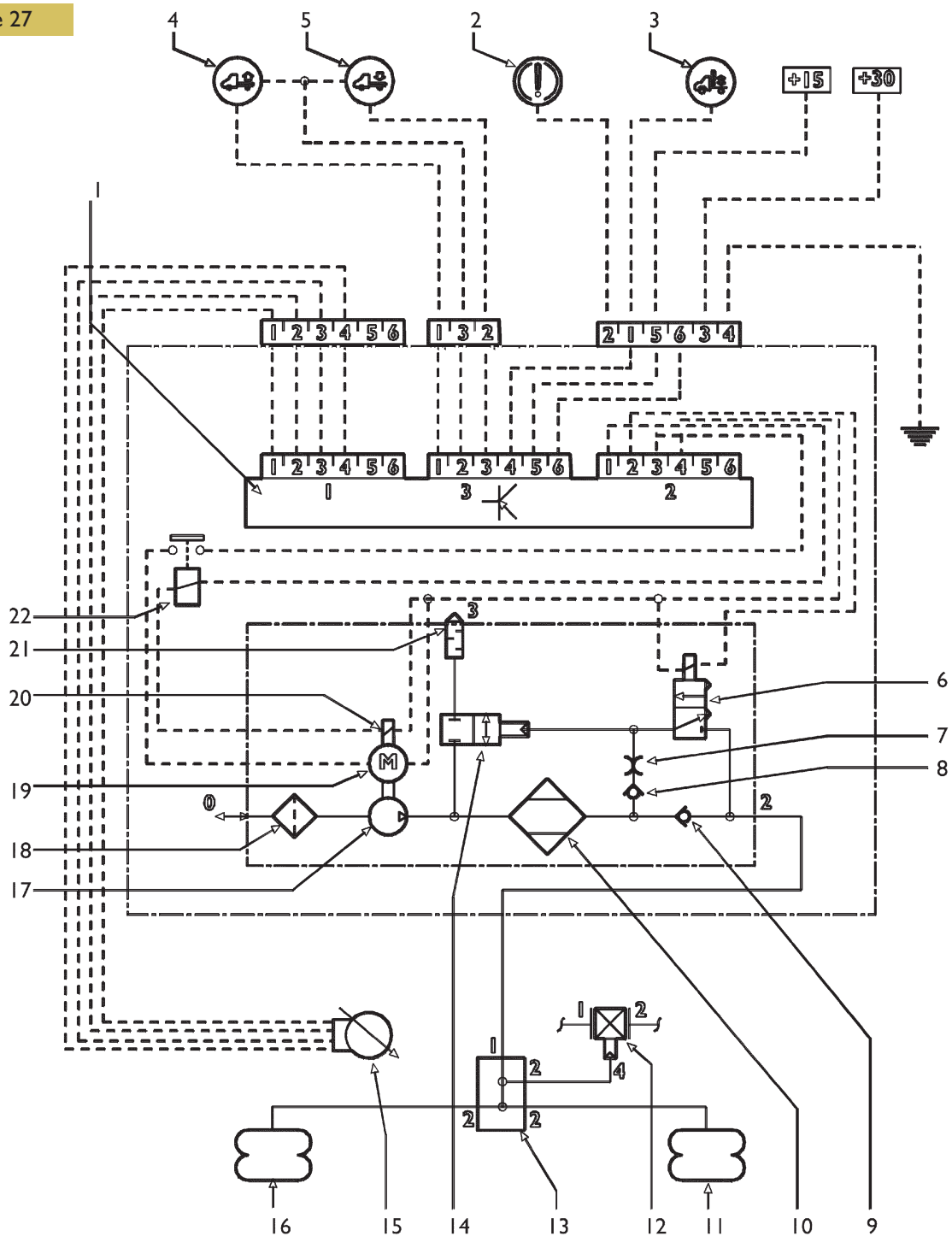

Legend

1 – ECU
2 – Hand brake ON switch
3 – Warning light
4 – Chassis lifting control switch
5 – Chassis lowering control switch
6 – Air spring bleeding solenoid valve
7 – Throttling valve
8 – Single–acting exhaust valve
9 – Single–acting delivery valve
10 – Drier filter
11 – Right air spring
12 – Pneumatic control load sensing valve*
13 – Air duct connection
14 – Pneumatic bleeding valve
15 – Level sensor
16 – Left air spring
17 – Compressor
18 – Supply filter
19 – Compressor motor
20 – Motor thermal sensor
21 – Exhaust silencer
22 – Motor control relay

* – Only for vehicles without ABS.attery

VB-TECHNIEK ELECTRICAL SYSTEM (60 C - 65 C VEHICLES)

Vehicles: 60 C - 65 C

Figure 28

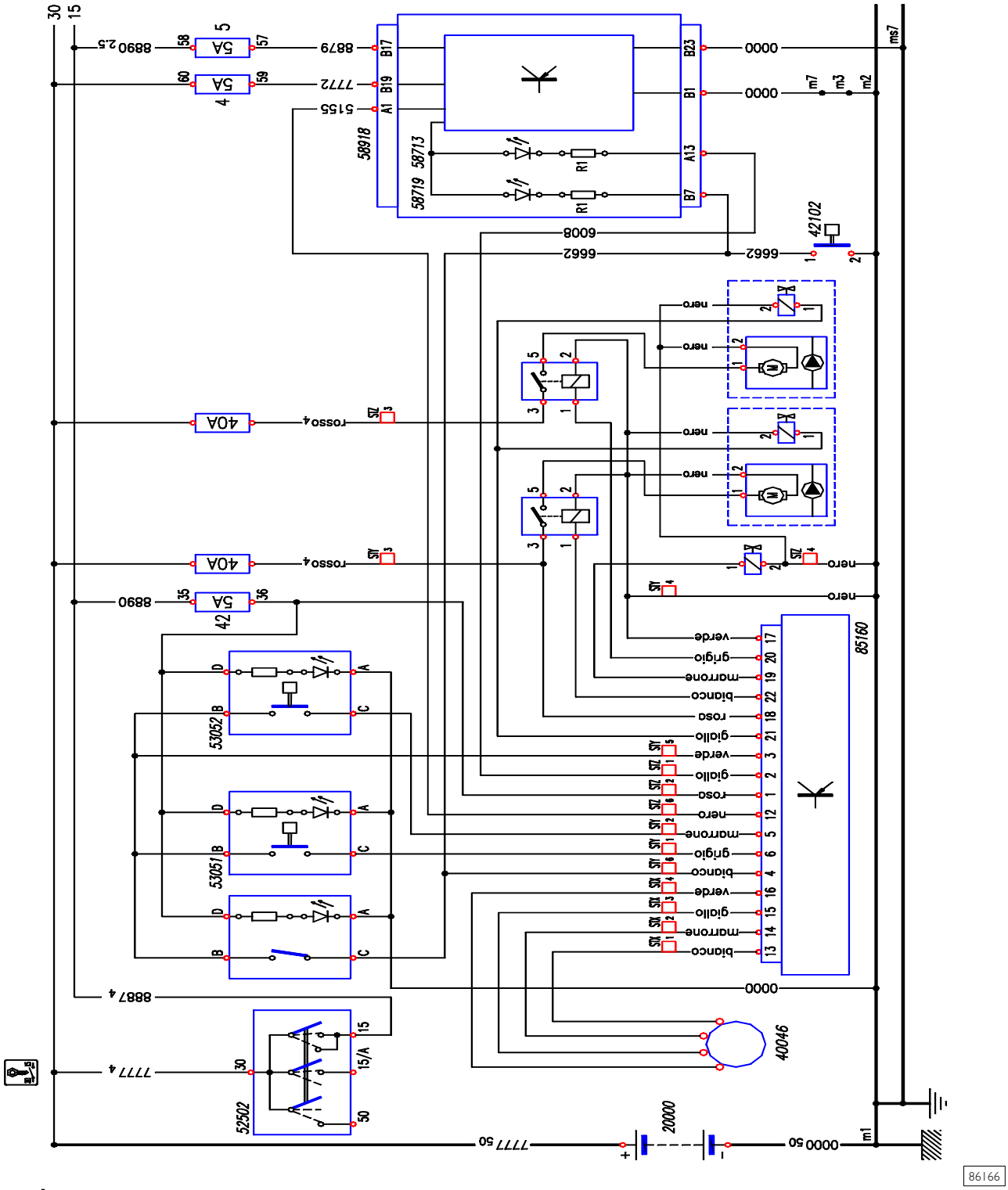

Legend

20000 Battery

40046 Chassis height sensor, inductive type, rear axle

42102 Handbrake engaged indication switch

52502 Key switch

53051 Suspension raising control switch

53052 Suspension lowering control switch

58713 VTB failure warning led

58719 Handbrake engaged led

58918 Instrument panel with 32 optical indications plus instruments

85610 Chassis position variation control device

PNEUMATIC SYSTEM (vehicles: 60 C - 65 C)
VB TECHNIEK Electronic-control pneumatic suspensions

Figure 29

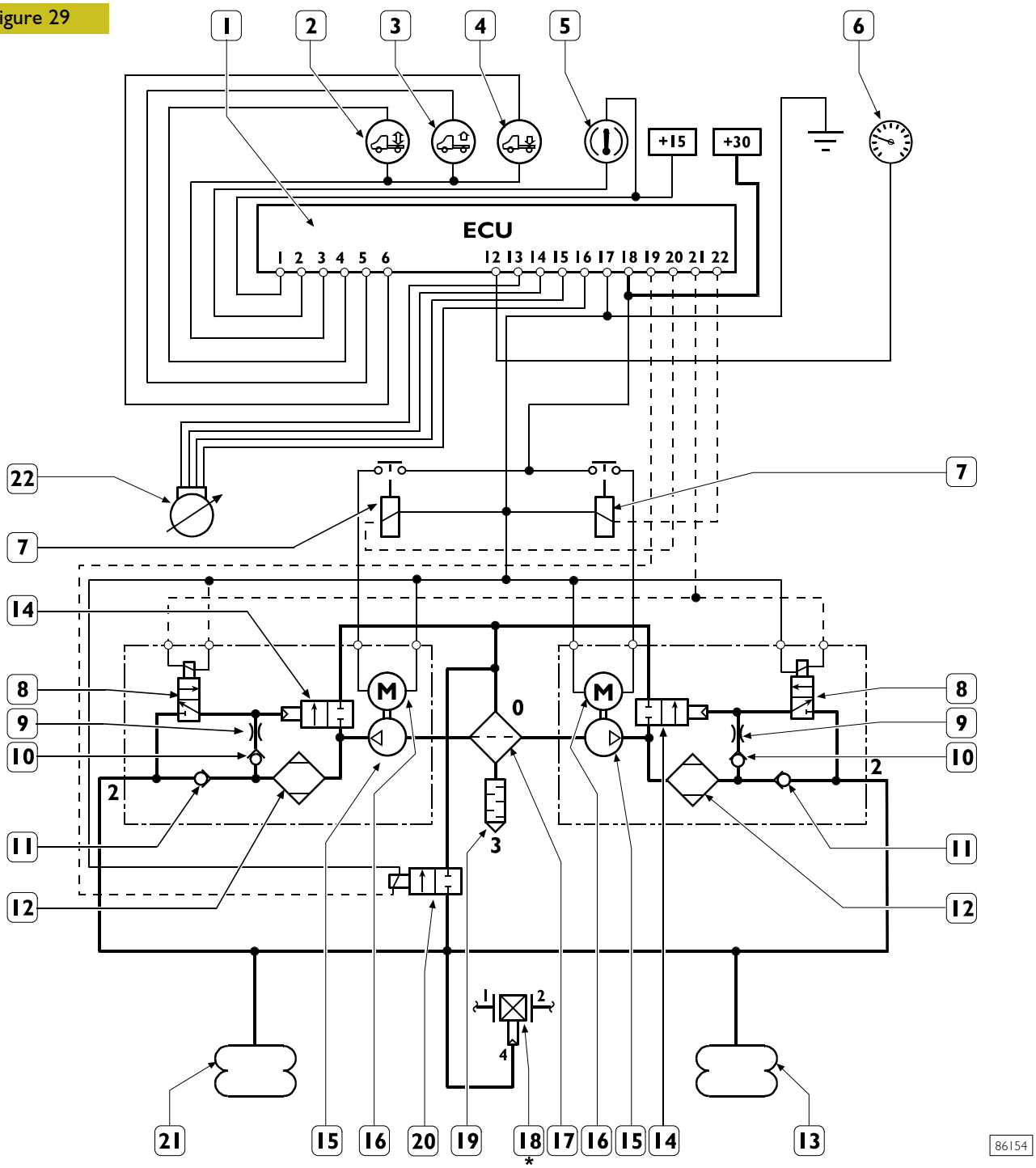

Legend

1 - electronic control unit
2 - manual mode activation button
3 - raising button
4 - lowering button
5 - VBT warning light
6 - tachograph
7 - electric motor relay
8 - exhaust solenoid valve (for washing)
9 - throttle valve
10 - single-acting exhaust valve
11 - single-acting feed valve
12 - drier filter
13 - RH air spring
14 - air exhaust valve
15 - compressor
16 - compressor electric motor
17 - filter
18 - brakeforce distributor
19 - silencer
20 - exhaust solenoid valve
21 - LH air spring
22 - level sensor

* Only for vehicles without ABS

PNEUMATIC SYSTEM ON VEHICLE
Vehicles without ABS (35C - 40C - 45 C - 50 C)

Figure 30

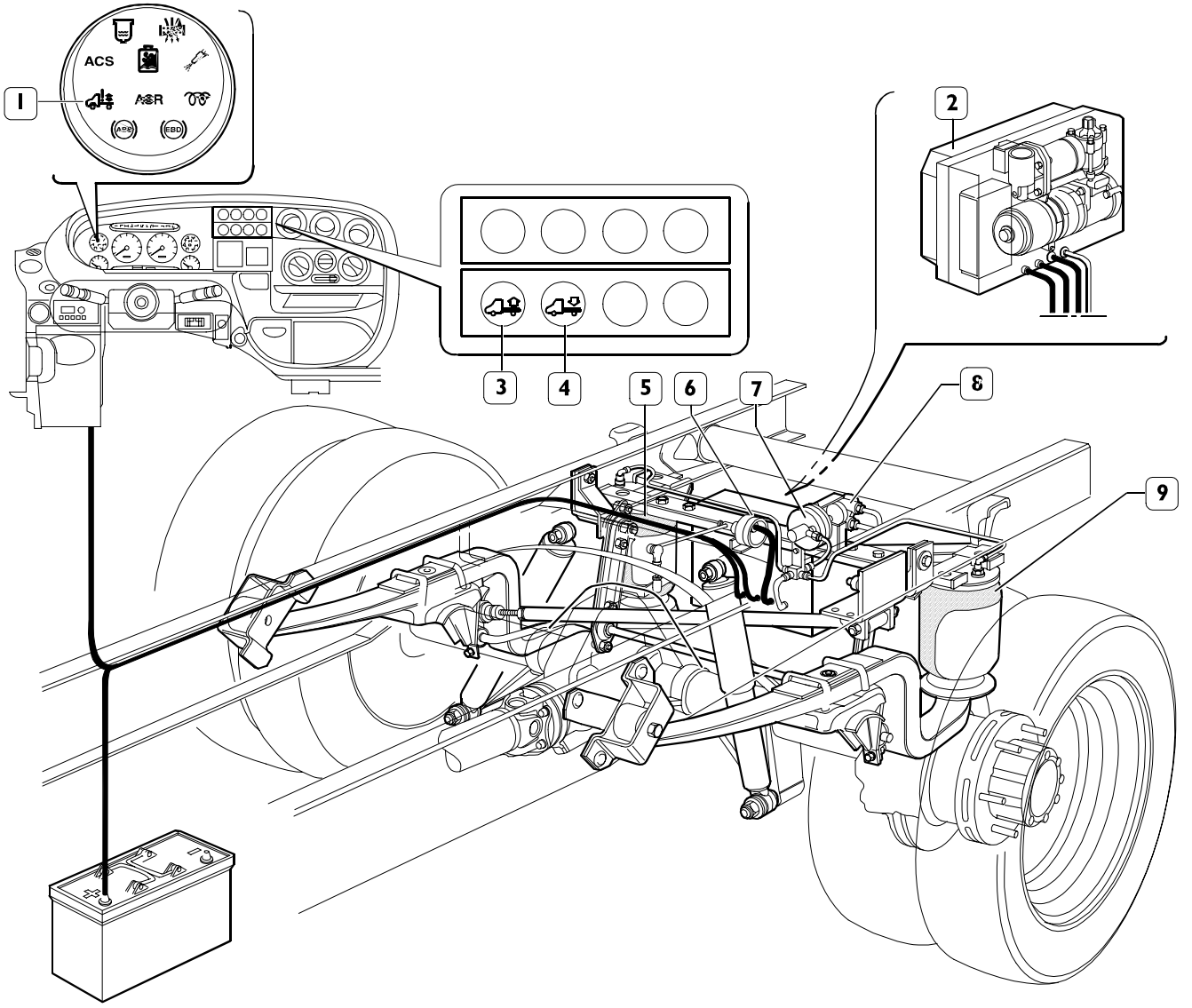

Legend

1 - VBT warning light
2 - Suspension control unit (ECU, pneumatic supply unit)
3 - Chassis lifting control switch
4 - Chassis lowering control switch
5 - Right air spring
6 - Level sensor
7 - Load sensing valve pneumatic actuator
8 - Load sensing valve
9 - Left air spring

Vehicles with ABS (35C - 40C - 45 C - 50 C)

Figure 31

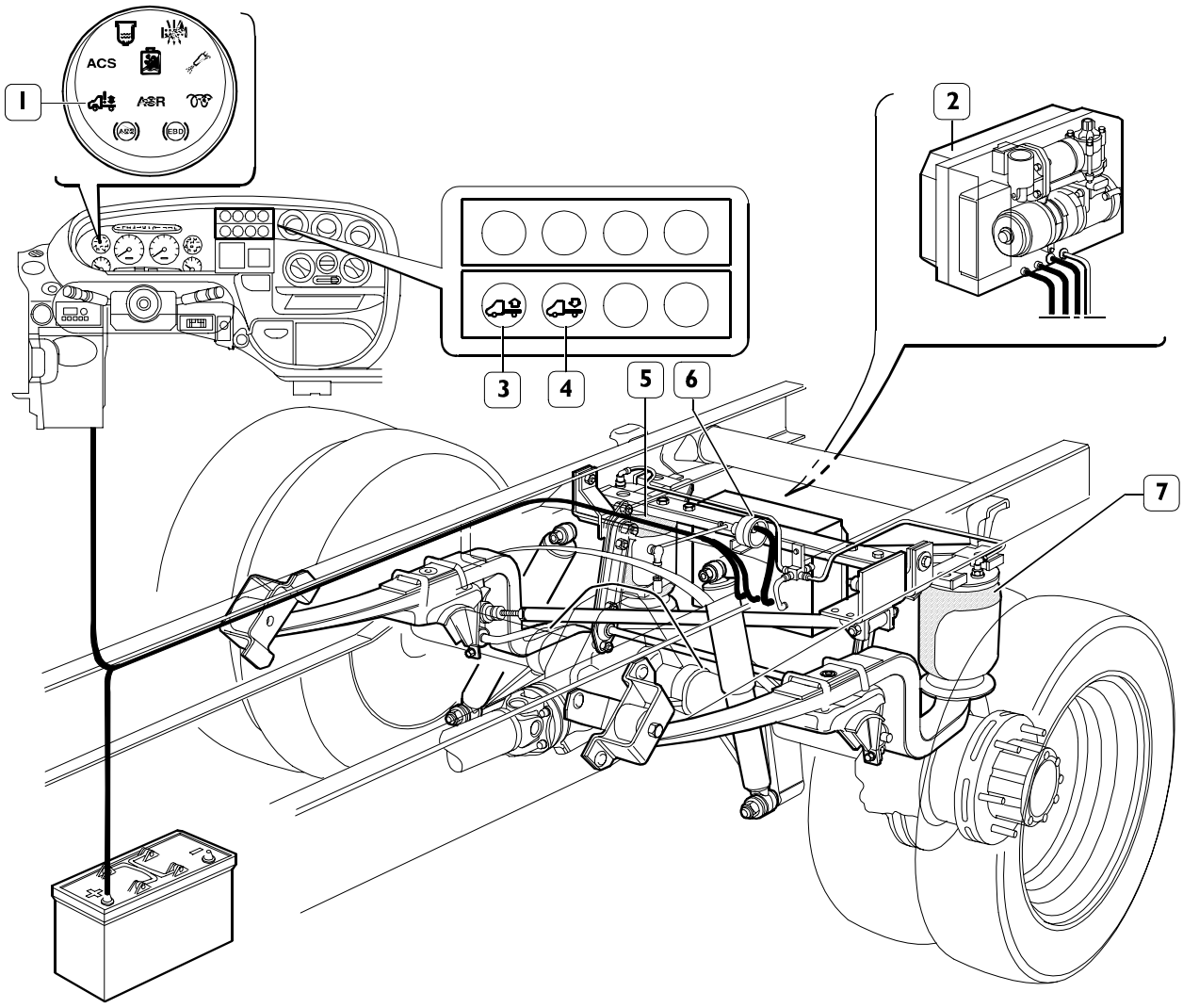

Legend

1 - VBT warning light
2 - Suspension control unit (ECU, pneumatic supply unit)
3 - Chassis lifting control switch
4 - Chassis lowering control switch
5 - Right air spring
6 - Level sensor
7 - Left air spring

60 C - 65 C vehicles without ABS

Figure 32

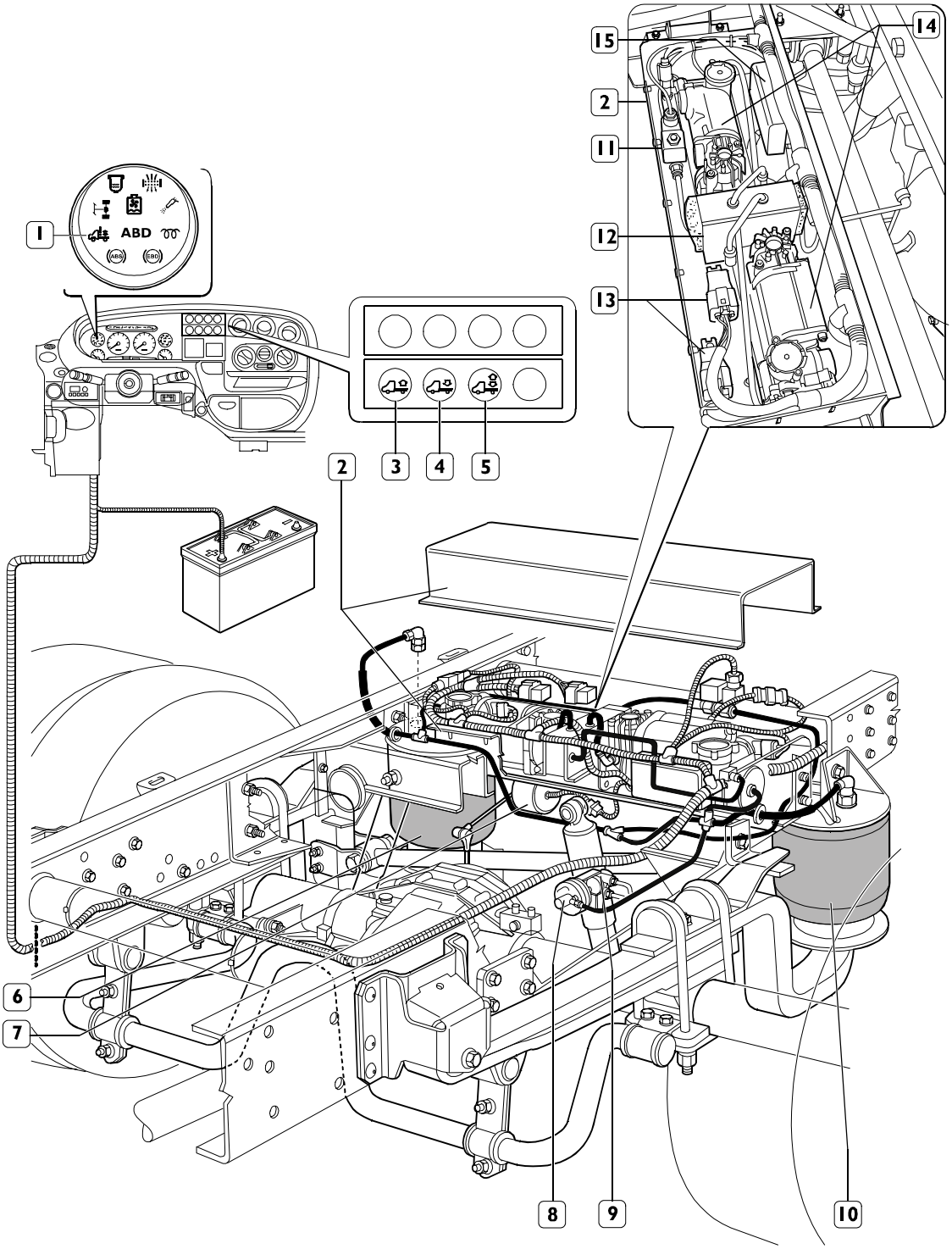

Legend

1 - VBT warning light
2 - Suspension control unit
3 - Chassis raising control button
4 - Chassis lowering control button
5 - Manual control button
6 - RH air spring
7 - Level sensor
8 - Brakeforce distributor air actuator
9 - Brakeforce distributor
10 - LH air spring
11 - Exhaust solenoid valve
12 - Filter
13 - Relay
14 - Electric compressor
15 - Control unit

60 C - 65 C vehicles with ABS

Figure 33

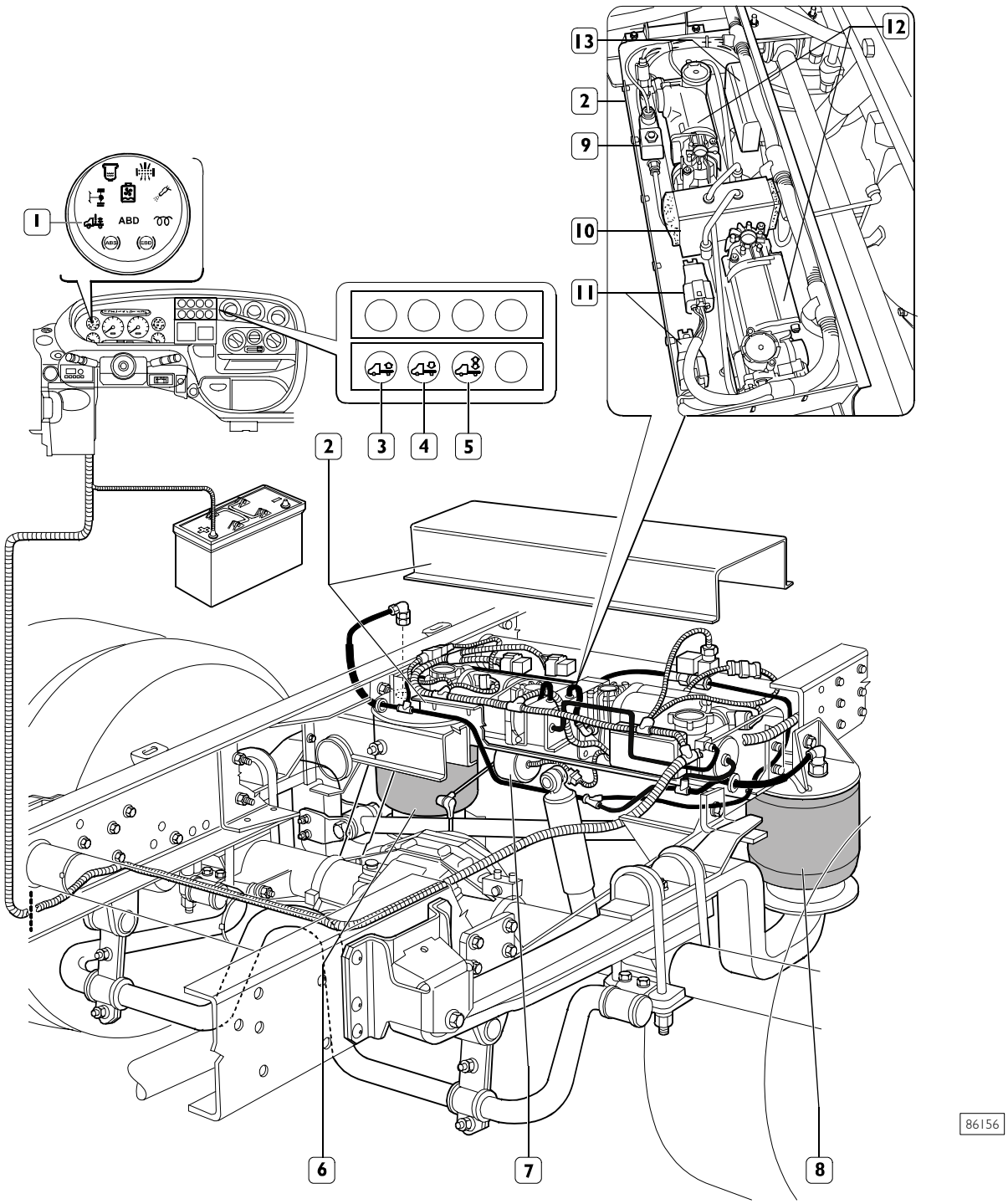

Legend

1 - VBT warning light
2 - Suspension control unit
3 - Chassis raising control button
4 - Chassis lowering control button
5 - Manual control button
6 - RH air spring
7 - Level sensor
8 - LH air spring
9 - Exhaust solenoid valve
10 - Filter
11 - Relay
12 - Electric compressor
13 - Control unit

CHASSIS SELF-LEVELLING, LIFTING AND LOWERING

Figure 34

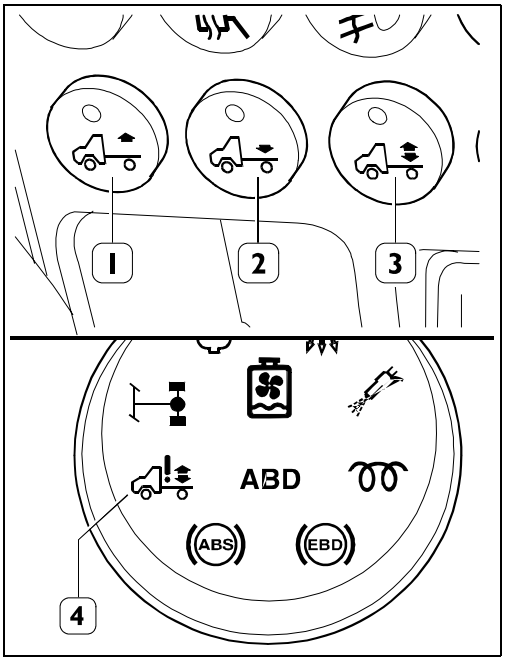

62355

Operation

The system consists of the following:

- ❑ Electrocompressor (two models 60 C - 65 C);
- ❑ One ECU;
- ❑ One level sensor;
- ❑ Two air springs;
- ❑ Two levelling buttons (1 and 2) in 30 C - 35 C - 40 C - 50 C models;
  Three buttons (1, 2, 3) in 60 C - 65 C models;
- ❑ One warning light (4).

The level sensor sends signals which are proportional to the chassis-road clearance to the ECU. The ECU processes these signals are consequently operates the electrical compressor (or compressors) for raising or lowering the chassis.

The chassis is automatically levelled when the engine is running and the handbrake is lowered (35 C - 40 C - 45 C - 50 C vehicles). In 60 C - 65 C vehicles, button (3) must not be pressed in addition to handbrake operation.

To change load bed height depress push buttons (1 and 2) for lifting or lowering the chassis.

Chassis lifting or lowering can be performed just with stopped vehicle and hand brake ON.

In 60 C - 65 C vehicles, this operation can be activated also when the vehicle is moving (up to 20 km/h) with handbrake off and levelling button pressed.

MAIN SYSTEM COMPONENTS

790560 ELECTROCOMPRESSOR

Figure 35

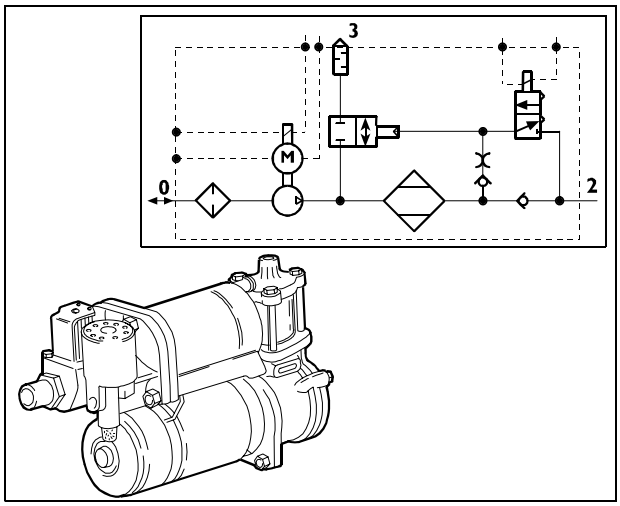

62440

This unit produces the compressed air required to supply the pneumatic system and enables to bleed air from the pneumatic system to lower the load bed.

766175 ELECTRONIC CONTROL UNIT

Figure 36

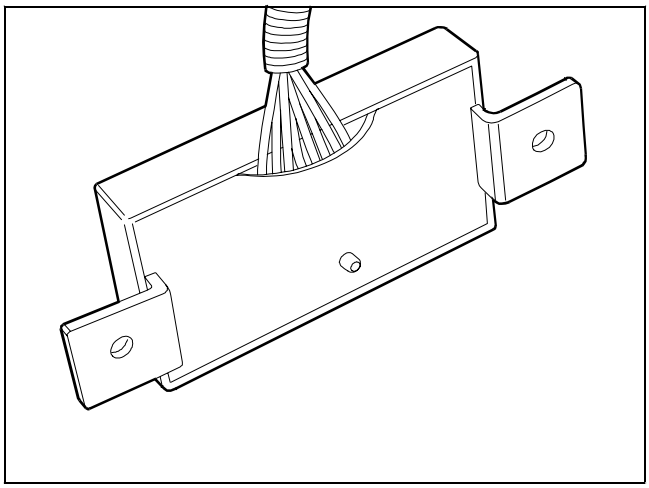

62441

The ECU is the mastermind of the system.

It controls every logic function of suspensions under both static and dynamic stage.

ECU receives signals from the control switch set in the cab and lifts and lowers the load bed accordingly. It also receives signals from the level sensor and controls the electrocompressor and the air spring to keep the vehicle in the self-levelling condition.

ECU indicates any system failure through the blinking of the dedicated led.

ECU programming/setting

No ECU programming/setting is required; only the level sensor adjustment according to the specified adjustment value shall therefore be performed.

768822 LEVEL SENSOR

Figure 37

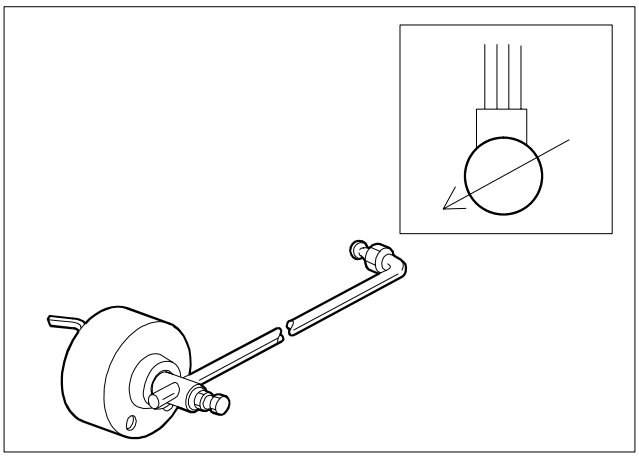

50870

The level sensor sends to ECU variable signals according to chassis-road level distance.

Level sensor replacement
Removal

Figure 38

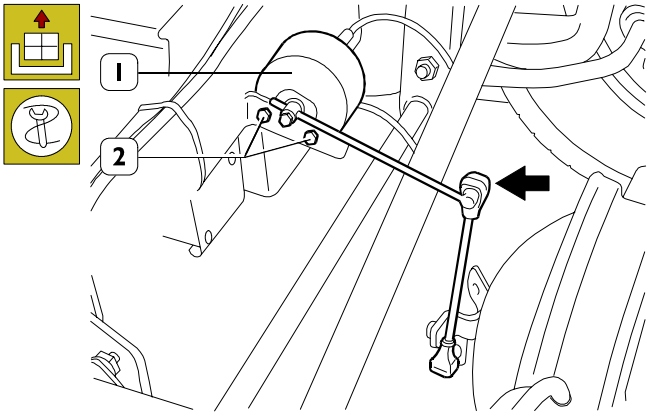

62442

Disconnect the electrical connection, disconnect the levers (⇒), loosen the fastening screws (2) and remove the level sensor (1).

Refitting

Reverse removal operations to perform refitting.

Perform level sensor adjustment as shown in the relevant paragraph "Level sensor adjustment".

Level sensor adjustment

Figure 39

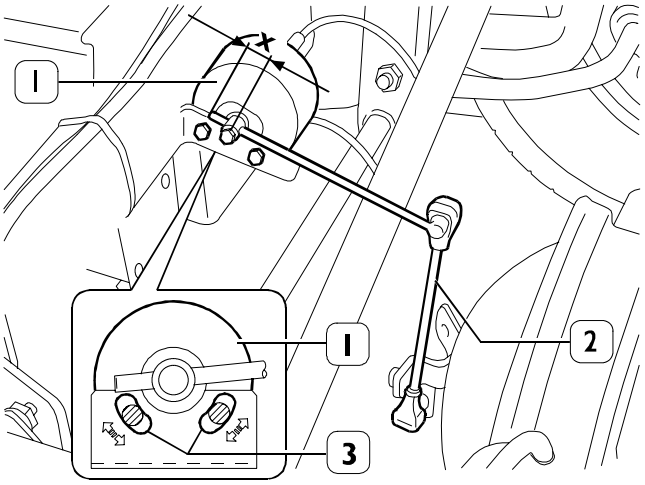

62585

Level sensor (1) adjustment shall be performed each time this sensor or the adjustment tie rod (2) are removed or replaced.

Apply the handbrake, raise the chassis by means of the button in the cab and insert the following shims between chassis and axle:

- 80 mm for 30 C - 35 C - 40 C - 50 C vehicles;
- 97 mm for 60 C - 65 C vehicles.

Lower down the chassis completely by depressing the proper push button located in the cab.

Check and adjust control lever X value to 11 mm if required.

Adjust level sensor (1) position by operating on the fastening screws (3) to obtain reaction lever verticality. Secure the level sensor.

500731 AIR SPRING

Figure 40

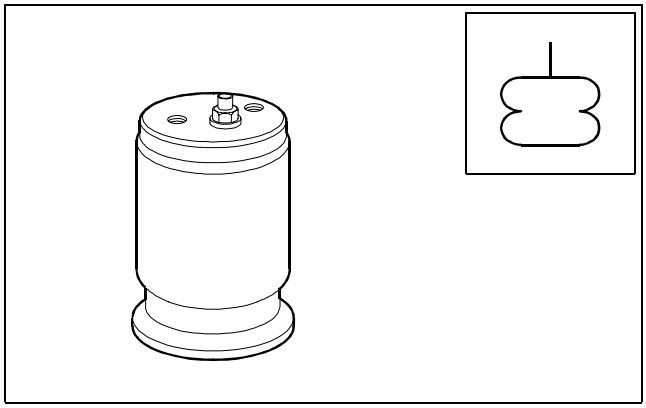

62443

Air spring is an elastic element dedicated to contain pressure air and to change its extension irrespectively of the applied load.

Air spring replacement
Removal

Figure 41

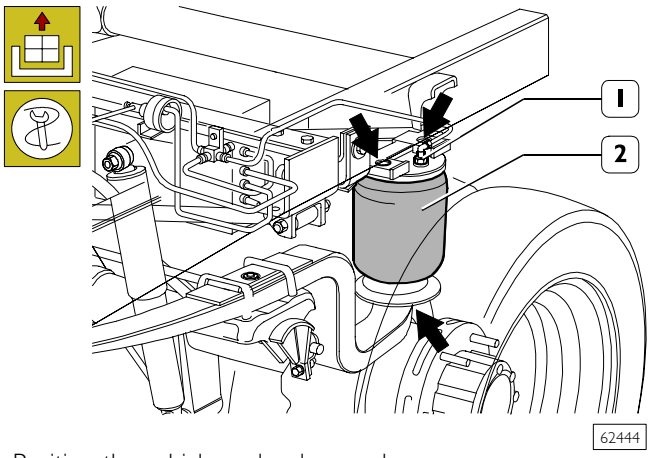

Position the vehicle on level ground.
Lift the rear part of the vehicle and rest the chassis on the proper stands.
Use the hydraulic jack to support the rear axle.
Bleed the system and disconnect the air spring (2) supply pipe (1).
Loosen upper and lower fastening screws (⇒).
Lower the rear axle and remove the air spring (2).

Refitting

Reverse removal operations to perform refitting.

784310 LOAD SENSING VALVE

Figure 42

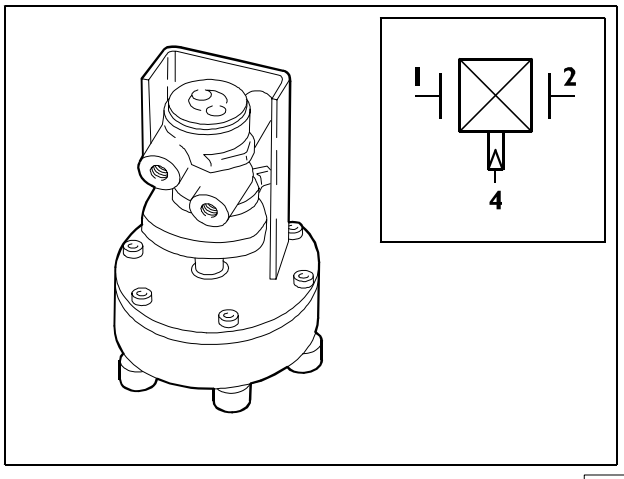

Vehicles not fitted with ABS system have been provided with the following components to obtain brakeforce distribution:

- single-circuit load sensing valve;
- load sensing valve pneumatic actuator.

The load sensing valve controls automatically the braking torque produced by brakes on the rear axle, according to the load applied on the rear axle, measured and transferred to the load sensing valve of the pneumatic actuator.
The load sensing valve used on vehicles with this type of suspension is set to 0.25 ratio.

Load sensing valve replacement
Removal

Figure 43

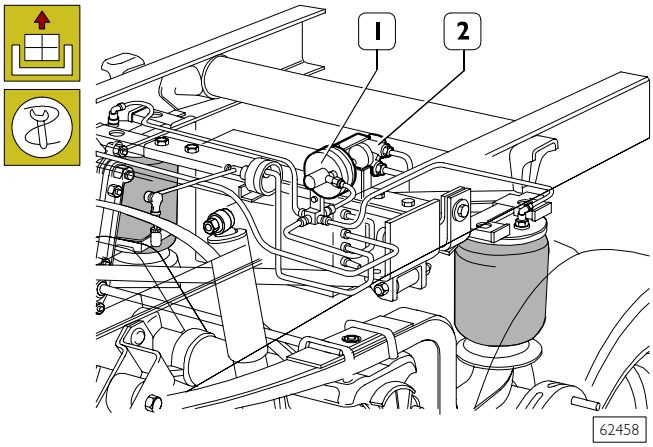

Bleed the system.

Disconnect pneumatic and hydraulic pipes, loosen the fastening screws and remove the load sensing valve (2) including the pneumatic actuator (1).

Refitting

Reverse removal operations to perform refitting.

Perform load sensing valve adjustment as shown in the relevant paragraphs "Load sensing valve adjustment on vehicle".

Load sensing valve adjustment on vehicle

This device shall be checked and adjusted, if required, at regular intervals.

Figure 44

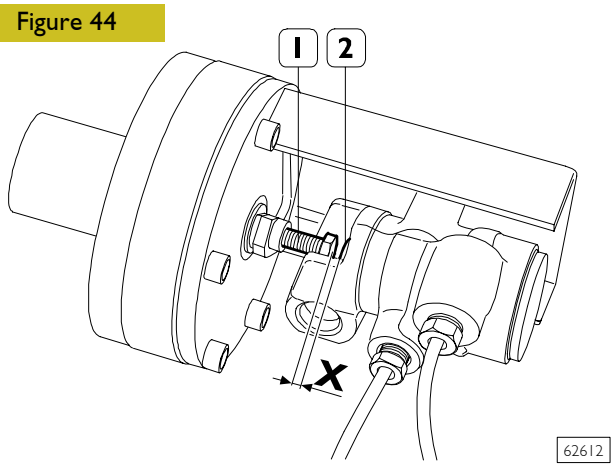

Remove the load sensing valve and the cover.

Refit the load sensing valve and operate on screw (1) to set dimension X, between load sensing valve push rod (2) and pneumatic actuator screw (1), to the value shown in table

Remove the load sensing valve and refit it with its cover.

VEHICLE	X
35C - 40 C	2.9 ÷ 3.3 mm
45C - 50 C	2 ÷ 2.5 mm

500730 REAR SUSPENSION OVERHAUL (vehicles 30 C - 35C - 40C - 45 C)

500450 LEAF SPRING

Removal

Figure 45

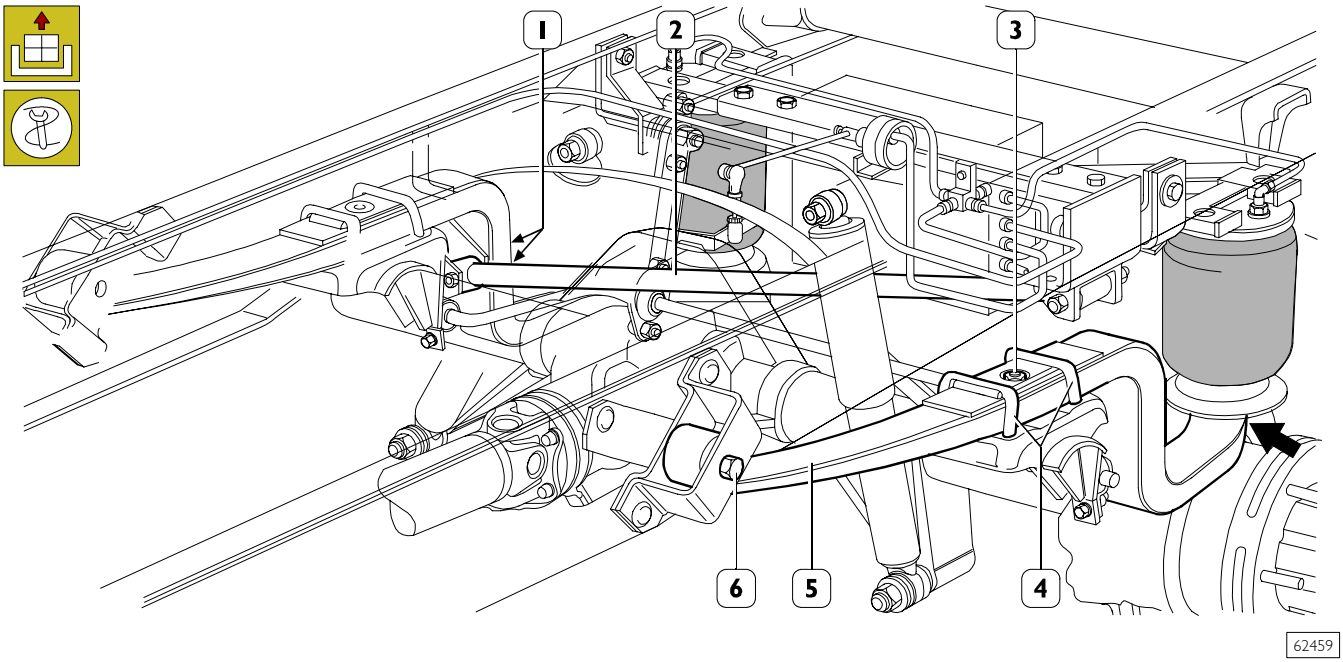

Position the vehicle on level ground.

Lift the rear part of the vehicle and rest the chassis on the proper stands.

Use the hydraulic jack to support the rear axle.

Bleed the system and remove the wheels.

Only for right leaf spring: loosen the screws (1) fastening the "Panhard" bar support (2) and disconnect it.

Loosen the air spring lower fastening screw (⇒).

Loosen the fastening nuts and remove the U bolts (4).

Loosen the screw (3) fastening the leaf spring (5) to the rear axle.

Loosen and remove the pin (6).

Remove the leaf spring (5).

Refitting

Reverse removal operations to perform refitting.

500940 REAR SHOCK ABSORBERS

Removal

Figure 46

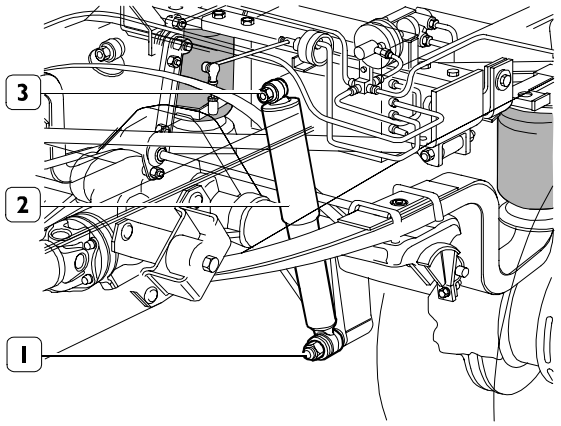

Lift the rear part of the vehicle and use the jack to support the rear axle.

Loosen the upper (3) and the lower (1) fastening nuts and remove the shock absorber (2).

Refitting

Reverse removal operations to perform refitting.

5289600 REAR STABILIZER BAR

Removal

Figure 48

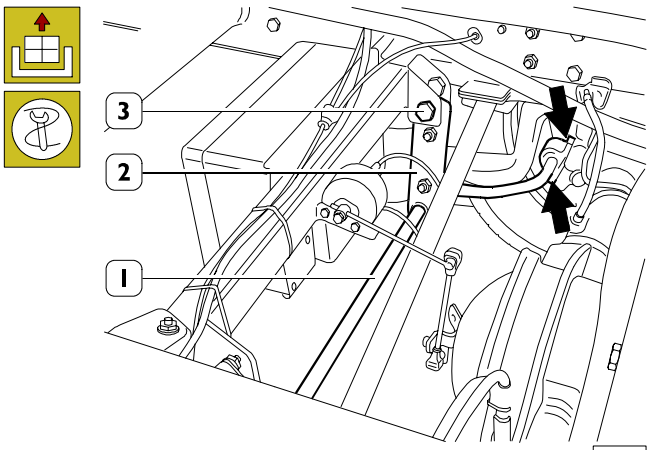

Operate on both vehicle sides and loosen the screws (⇒) fastening the stabilizer bar to the chassis. Loosen the nut and remove the pin (3).

Remove the stabilizer bar (1) including the joints (2).

Refitting

Reverse removal operations to perform refitting.

PANHARD REACTION BAR

Removal

Figure 47

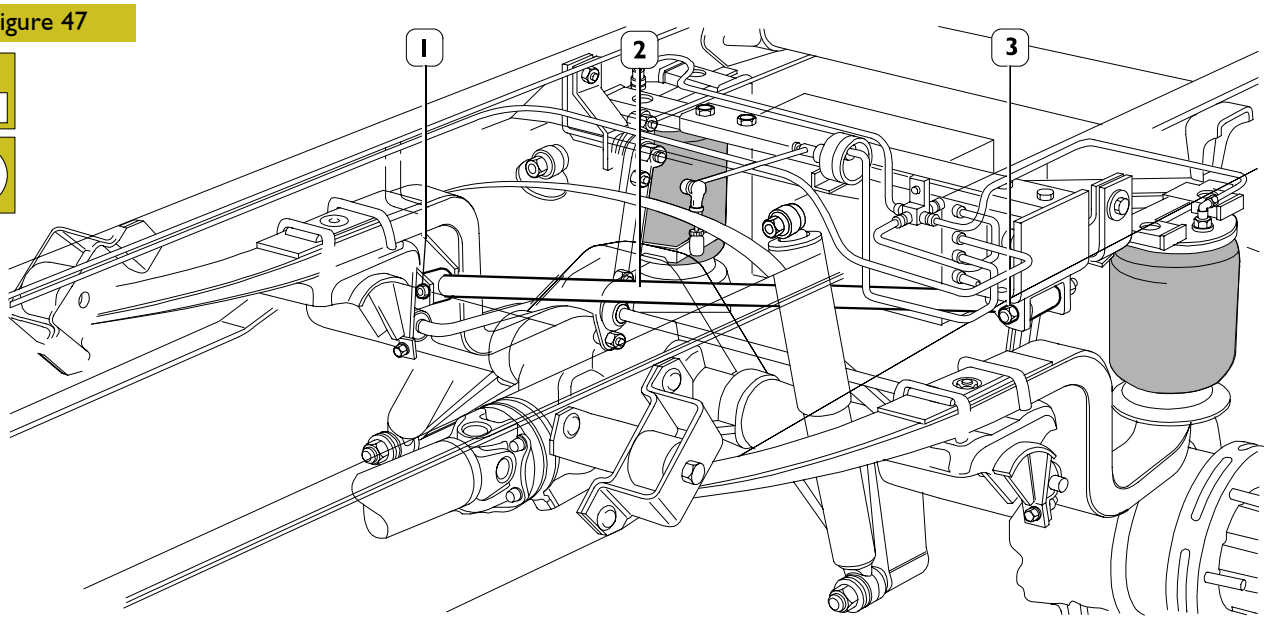

Loosen the fastening screws (1 and 3), withdraw the relevant pins and remove the "Panhard" reaction bar (2).

Refitting

Reverse removal operations to perform refitting.

SECTION 9

5025 Wheel and Tyres

Page

DESCRIPTION 3

❑ Tyre pressure 4

TOOLS 5

DIAGNOSTICS 5

STATIC WHEEL BALANCING 8

TYRE PRESSURE 9

HOW TYRE BEHAVIOUR DEPENDS ON PRESSURE 9

DESCRIPTION

The wheel rim represents the rigid structure of the wheel and is identified by the following dimensions:

- ❑ diameter of the rim, measured at the base of the circumferential groove (i.e., on the surface on which the air chamber rests);
- ❑ width of the circumferential groove in the wheel rim (i.e., the distance between the surfaces on which the cover rests).

The tyre has the following functions:

- ❑ to absorb the greater part of the jolts caused by roughness of the road surface by utilising the elasticity of air;
- ❑ to generate on the ground the motive force supplied by the engine necessary for the vehicle to move;
- ❑ to ensure the maximum grip and stability of contact between the tyre and the road, with satisfactory tyre life;
- ❑ to withstand the forces generated by sudden braking, hard acceleration and by the thrust of centrifugal force on bends;
- ❑ to ensure the stability of the vehicle even at high speeds; to ensure the steerability of the vehicle.

Figure 1

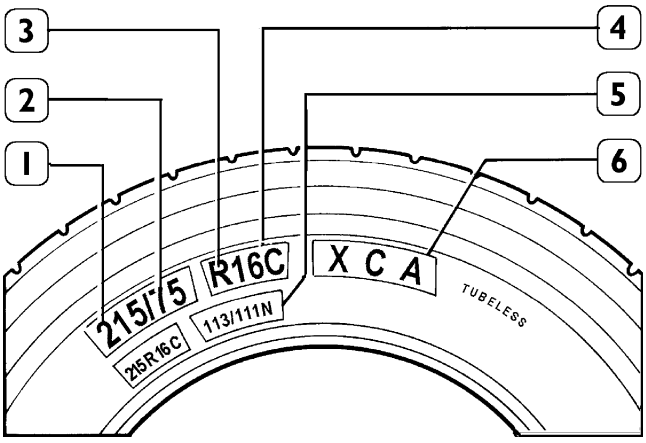

44928

1. Tyre section rated width (mm)
2. Tyre height-width ratio percentage e.g., H/S = 0.75
3. Tyre structure (R = Radial)
4. Wheel rim diameter in inches
5. Load and speed index symbols
   113: tyre load index on simple axis: 1150 kg
   111: tyre load index on paired axis: 1090 kg
   Speed category (N= 140 km/h)
6. Designation of the manufacturer's tyre:
   XC A Tubeless (TL): tyre to be used with no inner tube.

Figure 2

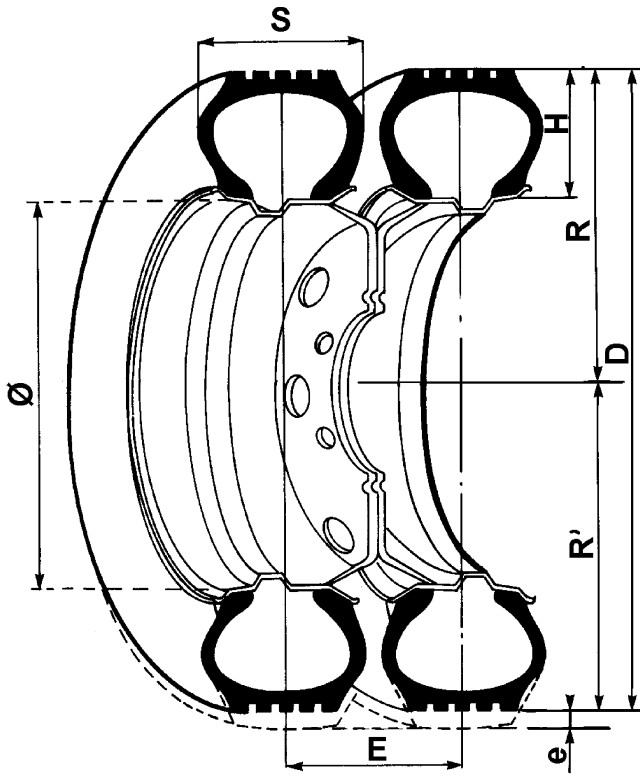

44929

S = Tyre section rated width (mm)
H = Tyre height
D = Max. utilisation diameter (Rx2)
R = Radius under load (static)
Ø = Fitting diameter
E = Min. distance between centres in case of paired tyres
e = Tyre deflection
CdR = Rolling circumference

Tyre pressure

bar (kg/cm^2)			3,0	3,25	3,5	3,75	4,0		4,5	4,75	5,0	5,25	5,5	6,0
205/70 R15	kg	front	1350	-	1500	-	-		-	-	-	-	-	-
106/104Q		rear	-	-	1500	1650	1740		1900	-	-	-	-	-
215/70 R15	kg	front	1460	-	1600	-	-		-	-	-	-	-	-
109/107Q		rear	-	-	1600	1700	1830		2060	-	-	-	-	-
225/70 R15	kg	front	1550	1650	-	-	-		-	-	-	-	-	-
112/110Q		rear	-	1740	1860	1960	2020		2240	-	-	-	-	-

bar (kg/cm^2)			3,0	3,25	3,5	3,75	4,0	4,25	4,5	4,75	5,0	5,25	5,5	6,0
195/65 R16	kg	front	-	-	1400	1450	1550	1650	1700	1800	-	-	-	-
104/102Q		rear	2230	-	2600	-	-	-	-	-	-	-	-	-
185/75 R16	kg	front	1300	-	1480	-	1590	-	-	1800	-	-	-	-
104/102Q		rear	2440	2600	2760	-	2990	-	-	3400	-	-	-	-
195/75 R16	kg	front	1350	-	1520	1600	1700	1750	1850	1900	-	-	-	-
107/105P		rear	2560	-	2890	3100	3200	3400	3550	3700	-	-	-	-
225/75 R16	kg	front	1950	-	2100	-	2260	-	-	-	-	2640	-	-
118/116		rear	3630	-	3930	-	4240	-	-	-	-	5000	-	-
+6.50 R16	kg	front	-	-	1370	1570	1680	1750	1840	1940	2000	-	-	-
106/107L		rear	-	-	2600	3050	3240	3400	3560	3720	3900	-	-	-
+7.00 R16	kg	front	-	-	-	-	1840	-	2000	2120	2200	-	2380	2570
117/116L		rear	-	-	-	-	3600	-	3890	4150	4260	-	4360	5000



The pressures indicated refer to cold tyres and an outside temperature of 20°C.

TOOLS

TOOL NO.		DESCRIPTION
99305037	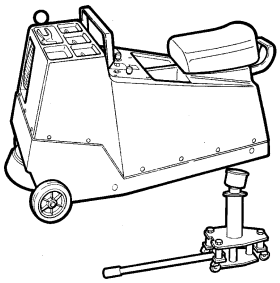	Electronic equipment for front wheel balancing on the vehicle

DIAGNOSTICS

Main tyres malfunctions:

1 - excessive wear;
2 - irregular wear;
3 - vehicle pulls to one side.

1 EXCESSIVE WEAR

Excessive speed on particularly uneven ground. – YES → Reduce speed.

NO ↓

Sudden variations in speed, violent or harsh braking. – YES → Avoid all unnecessary acceleration or braking.

NO ↓

Excessive speed with tyre pressures too low. – YES → Check tyres pressures cold.

NO ↓

Tyres pressures too high. – YES → Reduce pressures.

NO ↓

Truck overloaded. – YES → Consult data on loads permitted.

2 IRREGULAR WEAR

Difference in tyre pressures between one pair of wheels and the other.
– YES → Check pressure.

NO

Tyre pressures too low; wear more accentuated on the outsides of the tread than in the middle.
– YES → Increase tyre pressure.

NO

Tyre pressure too high, with excessive wear in the middle of the tread.
– YES → Reduce pressure.

NO

Insufficient toe-in of front wheels; substantial wear on the inside surfaces of the tread.
– YES → Check and adjust toe-in.

NO

Front wheel geometry incorrect.
– YES → Restore normal wheel geometry.

NO

Distortion of wheel rims causing imbalance.
– YES → If possible, repair the rims or replace; then balance the wheels.

NO

Tyres incorrectly fitted to rims.
– YES → Fit the tyre correctly and balance the wheel.

(continues)

Rear axle out of parallel due to breakage of the leaf spring centre pin, or springs of different lengths, or bent springs.

– YES → Overhaul the suspension.

NO

Excessive toe-in of front wheels; excessive wear of the outside surfaces of the tread.

– YES → Check and adjust toe-in.

3 VEHICLE PULLS TO ONE SIDE

Front wheels out of balance.

– YES → Balance the wheels.

NO

Front tyres at different pressures.

– YES → Check pressures ensuring that both are at the correct value.

NO

Excessive difference in wear between a pair of tyres.

– YES → Replace excessively worn tyre.

502511 STATIC WHEEL BALANCING

Figure 3

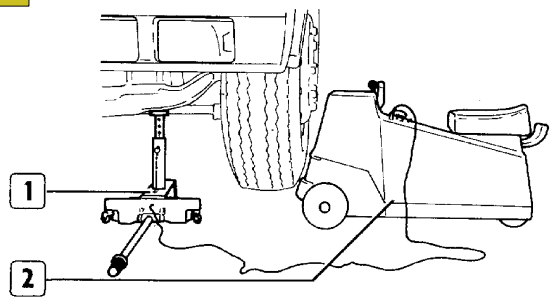

The front wheels can be balanced on the vehicle using the electronic unit 99305037; this has the advantage of balancing the wheel together with the other rotating masses.

The operation must be carried out as follows:

- ❑ raise the front of the vehicle and make sure that the wheels are free to rotate;
- ❑ position the imbalance detector (1) under the axle close to the wheel being examined, arranging the height so that the spin-up wheel of unit 99305037 (2) is in contact with the tyre; position a support stand under the opposite side of the axle and lower the hydraulic jack;

Figure 4

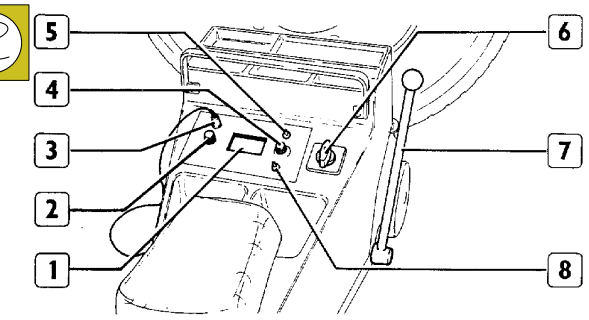

16997

- ❑ connect the cable (3) of the imbalance detector to unit 99305037;
- ❑ make a reference mark on the tyre by drawing a radial mark with chalk or using a strip of gummed paper;
- ❑ turn switch (2) to the static balancing position and sensitivity switch (4) to notch no. 5 on the graduated scale;
- ❑ turn on switch (5) for instrument light (1) and strobe lamp switch (8);
- ❑ turn the spin-up switch (6) of unit 99305037 to the first speed position so as to make the wheel rotate.

Turn up the spin switch (6) to the second speed and place the balancing machine against the tyre.

While the wheel is being spun, it will be found that the stroboscopic effect on the wheel will make the reference mark appear stationary; the pointer of the instrument (1), moving from the value zero, reaches a maximum value on the scale and then returns to zero.

When the pointer has begun to fall back, withdraw the balancing machine, turn off the spin-up switch (6) completely and brake the motor by means of the brake lever (7).

The wheel continues to revolve due to inertia and the reference mark made on the tyre moves; the point to which the reference mark has moved should therefore be noted.

Read off from the instrument (1) the value shown by the pointer, multiply it by 10, giving the value of the balance weight to be fitted to the rim.

Figure 5

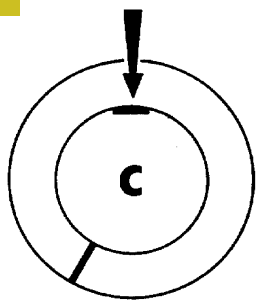

16998

Fit the balance weight calculated in this way as shown in the figure.

If during the test, the pointer of the instrument (1, Figure 4) remains in the green area of the box, the wheel is balanced.

If the weight required to balance the wheel is more than 60 ÷ 80 grams, divide the weight in half and position the two parts so formed with one half on the inside and one half on the outside of the rim, making sure that they are in the same position.

Figure 6

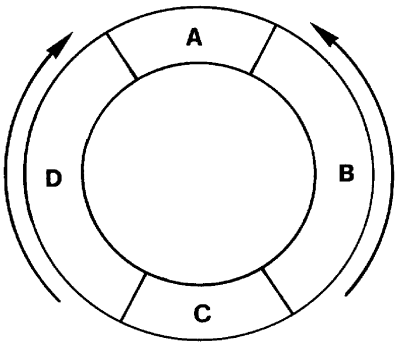

23885

To correct the residual imbalance, repeat the operations already carried out as above; depending on the new reading of the instrument (1, Figure 4), refer to the diagram in the figure and proceed as follows to adjust:

- If the weight is in the zone marked with the letter A, this means that it is too light, and in that case weight must be added as indicated by the instrument (1, Figure 4).
- If the weight is in the bottom zone marked with the letter C, this means that it is too heavy and in that case the weight must be reduced as shown by the measuring instrument.
- If the weight is found to be in the zones marked with the letters B or D, do not remove or add any weight but instead move it 5 cm upwards in the direction of the arrows, see Figure 6.

502510 TYRE PRESSURE

The tyre pressures must be checked with the tyres cold.

Take great care that the pressure is correct since, if it is higher than required, a harsh ride and excessive wear of the centre of the tread will result, while if it is lower, the load is not distributed over the whole tread but is concentrated at either side, causing premature wear of these areas and also damaging the internal structure of the tyre.

Unequal pressures between tyres affects the driving stability of the vehicle and impairs operating safety.

Tyre abnormal wear can occur in different areas of tread.

HOW TYRE BEHAVIOUR DEPENDS ON PRESSURE

Schematic views to demonstrate how tyre behaviour and performance depend on pressure.

The value shown inside each tyre indicates the level of pressure of the tyre, while the efficiency relates to the life of the tyre.

Figure 7

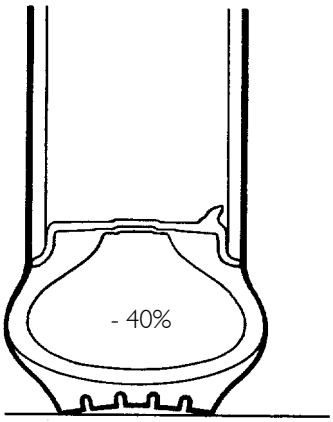

EFFICIENCY 40%

Figure 8

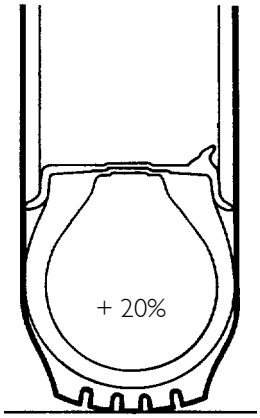

EFFICIENCY 90%

Figure 9

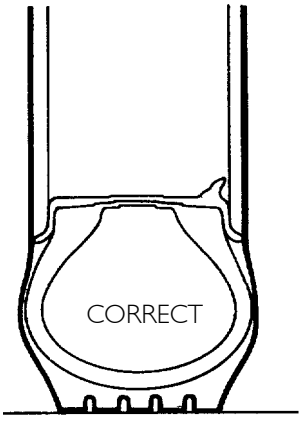

EFFICIENCY 100%

SECTION 10

5014 Steering gear

	Page
STEERING GEAR	3
❑ General	3
POWER STEERING SPECIFICATIONS AND DATA	4
❑ Steering gear	4
TIGHTENING TORQUES	5
SPECIFIC TOOLS	5
DIAGNOSTICS	6
POWER STEERING	11
❑ Description	11
POWER STEERING TYPE TRW	12
❑ Operation	12
POWER STEERING TYPE ZF	14
❑ Operation	14
CHECKS AND OPERATIONS ON THE VEHICLE	16
❑ Checking maximum pressure	16
❑ Checking hydraulic steering centre (for "ZF" power steering only)	16
❑ Bleeding the air from the hydraulic system	16
SWIVEL HEADS	16
PROTECTION CASINGS	16
STEERING GEAR CONTROL	16
❑ Vehicles equipped with an Air-Bag	16
SAFETY STANDARDS TO BE OBSERVED DURING REPAIR OR MAINTENANCE OPE- RATIONS ON VEHICLES EQUIPPED WITH AIR-BAG SYSTEM PROVIDED BY SUPPLIER	17
❑ Preliminary Standards	17
❑ Repairs and inspections required after an accident	17
❑ Accidents with or without Air-Bag module activation	17

	Page
❑ Accidents with Air–Bag module activation	17
❑ Painting	18
❑ Risks for health	18
❑ Overexposure effects	18
❑ Safety Standards to observe when handling Air–Bag modules	18
❑ Air–Bag module scrapping	19
❑ Safety Standards to observe when handling pretensioners	19
❑ Pretensioners scrapping	20
❑ Operations on system components	20
❑ Removing and scrapping activated Air–Bag module and pretensioner from vehicle	20
❑ Removing and scrapping non–activated Air–Bag module from a repairable vehicle	20
❑ Air–Bag module deployment Remote activation	21
❑ Activating Air–Bag modules and electronic pretensioners installed on unrecoverable vehicles	21
❑ Upper steering gear shaft removal	23
❑ For vehicles equipped with Air–Bag	23
❑ For all vehicles	23
❑ Refitting	24
❑ Lower steering gear shaft removal	24
❑ Refitting	25
HYDRAULIC POWER STEERING	25
❑ Hydraulic power steering removal	25
❑ Refitting	25
❑ Steering linkage replacement	26
❑ Removal	26
❑ Refitting	26
❑ Rubber bushing replacement procedure	26
POWER STEERING PUMP	27
❑ Power steering pump overhaul procedure	27

STEERING GEAR
General

Generally, the steering gear members consist of: a full steering gear control, a steering box, the linkage joining the driving wheels and, for the hydraulic-type steering box of: an hydraulic pump, an oil tank and oil piping.
The rotary movement given to the steering wheel by the driver is transmitted to the steering box by three shafts joined one another by universal joints.
The universal joints allow the transmission of the rotary movement on different planes.
The upper shaft, on which the steering wheel is keyed, is housed and supported in the upper support by elastic bushes. In addition, the indicator automatic switch-off and the antitheft steering lock are keyed to the support.
The steering box is of the type: pinion - rack rod with hydraulic power.

It has two functions:

- ❑ angle driving between spin axis of the steering control and the wheels' steering axis.
- ❑ gear down through the coupling ratio the resistant moment opposing the wheels under the steering effect.

The value of this ratio and the wheel geometry characteristics (toe-in - camber - caster), determine the stress and the type of steering, more or less direct; this increases or decreases the driver sensitivity of the vehicle attitude on road; besides, it determines the steering caster action degree, that is, the spontaneous return to straight normal running when the steering wheel is released after steering.

The tie rods joining the steering levers mounted on stub axles using knuckle heads are joined by ball joints at the end of the rack rod. Operating the tie rod the wheel camber is adjusted.

The hydraulic pump is of the blade type and is flanged to the engine auxiliary member unit, it has the overpressure valve incorporated.

Figure 1

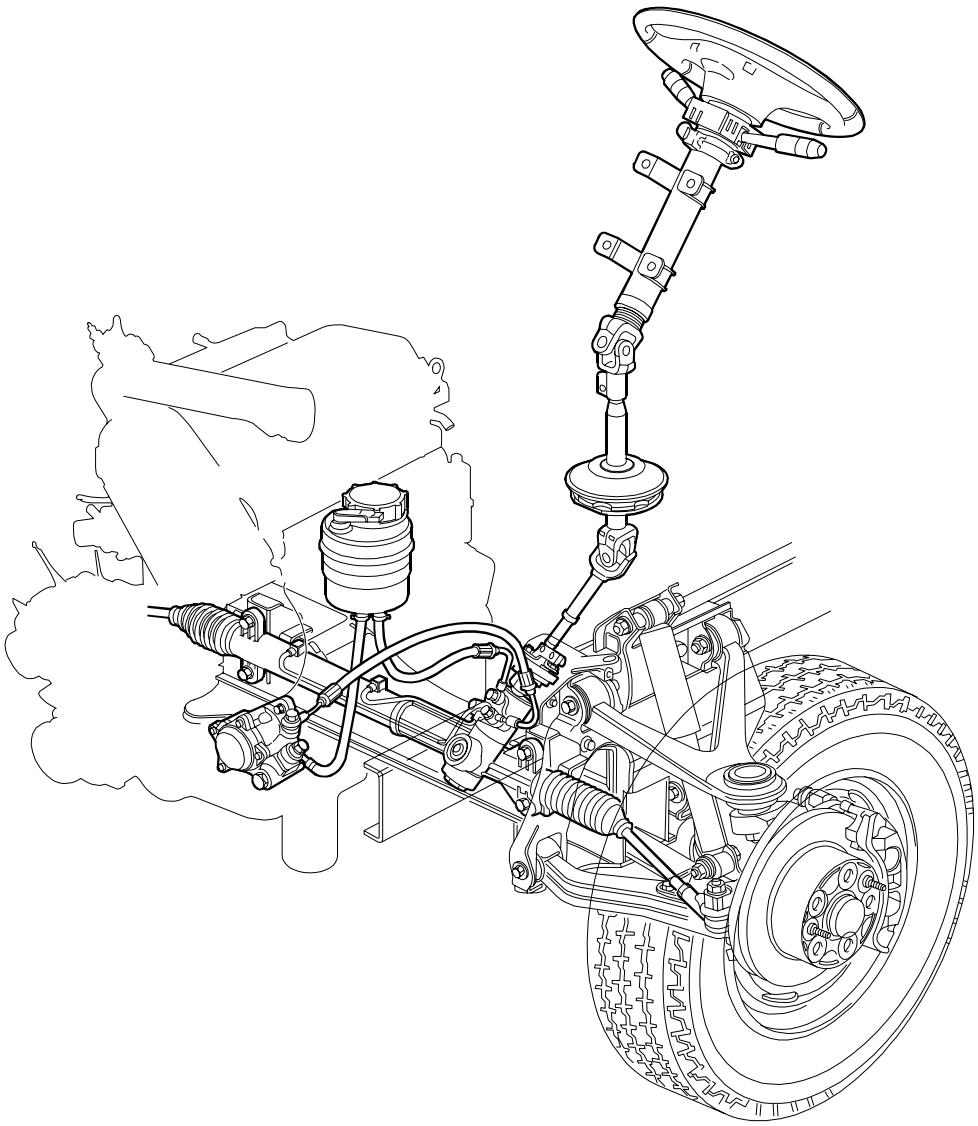

52375

STEERING GEAR DIAGRAM

POWER STEERING SPECIFICATIONS AND DATA

Steering gear

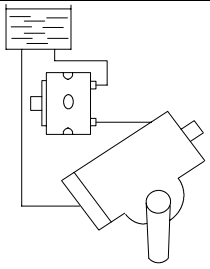

	Steering gear		Hydraulic	
	Power steering		Pinion and rack type	
	Type		ZF*	TRW
	Operating pressure X		100 bar	
	Maximum delivery volume		-	
	No. of steering wheel turns		3.8	
	Rack travel in both steering directions:		180 ± 1.5 mm	
Lube oil	Type		TEXAND F020	SHELL-ALVANIA LS00
	pinion side	kg	-	0.060
	pipe end side	kg	-	0.030
	Power steering pump		blade type with pressure relief valve incorporated	
	Motor		8140	FIA
	Type		ZF 7684 955124	ZF 7684 955138 / ZF 7612 955117
	Minimum RGM	RPM	500	460 / 500
	Maximum RGM	RPM	3500	2980 / 8500
	Maximum pressure	bar	80 + 10	100 + 10
	Minimum delivery	dm^3/min	-	-
	Adjusted delivery	dm^3/min	7	8 / 9 ± 0,75

Turning circle (theoretical value) [m]

Wheelbase [mm]	MODELS			
	29 L - 35 S	35 C (1)	35 C (2) - 40 C - 45 C - 50 C	60 C - 65 C
Tyres	205 - 225/70 R 15	195/65 R 16	195/75 R 16	225/75 R 16
3000	10.37	10.34	11.04	-
3300	11.25	11.22	11.98	11.79
3450	11.69	11.66	12.46	12.25
3750	12.57	12.54	13.40	13.17
3950	13.15	13.12	14.03	13.78
4100	-	13.56	14.50	14.24
4350	-	-	15.29	15.01
4750	-	-	16.55	16.24

(1) Front suspension with trasverse leaf spring.
(2) Front suspension with torsion bar.

TIGHTENING TORQUES

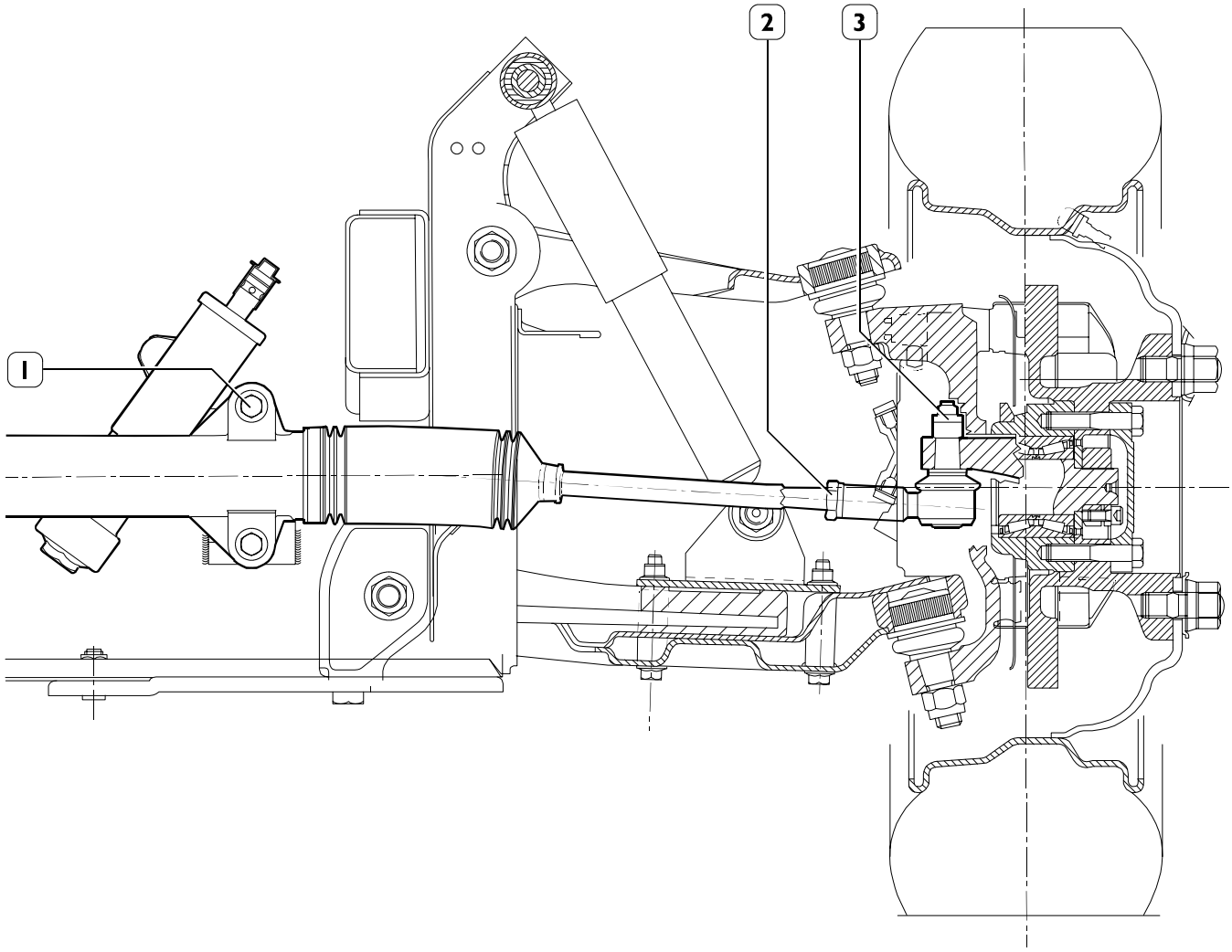

	DESCRIPTION	TORQUE	
		Nm	kgm
1	Screw, steering box fastening nut	50 ÷ 61	5 ÷ 6.1
2	Nut, ball joint to steering arm	68 ÷ 83	6.8 ÷ 8.3
3	Nut, ball joint to track arm	70 ÷ 100	7 ÷ 10

SPECIFIC TOOLS

TOOL NO.		DESCRIPTION
99347074	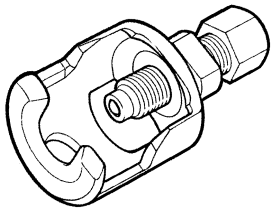	Knuckle pivot extractor (4x2 vehicles)

DIAGNOSTICS

Main hydraulic power steering operating faults:

1 - Steering stiff when turning right and left;
2 - Steering stiff only when turning left or right;
3 - Steering stiff when the wheel is turned quickly;
4 - When steering, heavy jolts are felt at the wheel;
5 - Torsional vibration of the steering wheel;
6 - Excessive play at the steering wheel;
7 - Loss of oil;
8 - Insufficient pressure in the circuit;
9 - The vehicle tends to move sidewards;
10 - Hydraulic power steering pilot light always lighted.

1 STEERING STIFF WHEN TURNING RIGHT AND LEFT

Insufficient oil in system. – YES → Open tank and check oil level. With engine running, top up oil to upper mark on dipstick and bleed system.

NO ↓

Air in hydraulic circuit. – YES → Check suction tube and pump shaft seal for leaks. Bleed system and top up the oil.

NO ↓

Pump regulating valve jammed or blocked. – YES → Replace the power steering pump

NO ↓

Insufficient oil pump delivery. – YES → Overhaul or replace pump.

NO ↓

Universal joint not serviceable. – YES → Make joint free to slide by moving it to and from several times so that it tilts under its own weight.

NO ↓

Internal power steering failure – YES → Replace the power steering unit

2 STEERING STIFF ONLY WHEN TURNING LEFT OR RIGHT

Incorrect position of hydraulic centre (when wheel is released, the steering returns to one end of travel by itself): (ZF steering case only).. – YES → Replace the power steering unit

3 STEERING STIFF WHEN THE WHEEL IS TURNED QUICKLY

Regulating valve in pump blocked. – YES → Replace the power steering pump

NO

Insufficient pump delivery (gears worn). – YES → Replace the hydraulic pump

NO

Air in steering system. – YES → Check suction tube and pump shaft seal for leaks. Bleed system and top up the oil.

4 WHEN STEERING, HEAVY JOLTS ARE FELT AT THE WHEEL

Play in universal joint. – YES → Fit a new seal.

NO

Internal failure of hydraulic power steering. – YES → Replace the power steering unit

NO

Insufficient oil in system. – YES → Top up oil and bleed system.

(Continue)

Front wheel geometry incorrect.	– YES →	Check and adjust according to specifications in the section "Axles".
NO ↓		
Wheels out of balance.	– YES →	Balance in accordance with instructions given in the section "Wheels and tyres".
NO ↓		
Steering rod joints loose on the levers.	– YES →	Replace any worn parts.
NO ↓		
Irregular pump operation.	– YES →	Replace pump.
NO ↓		
Leakage of oil from hydraulic power steering circuit couplings.	– YES →	Check coupling seals for serviceability, replacing any which are worn.

5 TORSIONAL VIBRATION OF THE STEERING WHEEL

Wheels out of balance.	– YES →	Balance in accordance with instructions given in the section "Wheels and tyres".
NO ↓		
Wrong wheel toe-in.	– YES →	Adjust in accordance with characteristic data for described in the section "Axles"."
NO ↓		
Air in hydraulic system.	– YES →	Check suction tube and pump shaft seal for leaks. Bleed system and top up the fluid.

6 EXCESSIVE PLAY AT THE STEERING WHEEL

Play in ball joints and/or elastic supports loosen.
– YES → Secure the supports
Replace the ball joints.

NO

Play in universal joint.
– YES → Replace universal joint.

NO

Internal failure of hydraulic power steering.
– YES → Replace the power steering unit

7 LOSS OF OIL

Tank cover not secured.
–YES → Secure cover.

NO

Seal gaskets worn.
– YES → Replace the power steering unit

In any case it is necessary to determine the place and the reason why there is oil leakage, eliminate the cause, top up oil in the tank with the engine started up to the upper mark of the dipstick.

8 INSUFFICIENT PRESSURE IN THE CIRCUIT

Hydraulic pump not operating correctly.
– YES → Replace the power steering pump

(Continue)

Oil leaking from couplings in power steering circuit.

– YES → Check coupling seals for serviceability, replacing any which are worn.

NO ↓

Insufficient oil level in the tank.

– YES → Top up level and bleed circuit.

9 THE VEHICLE TENDS TO MOVE SIDEWARDS

→ Replace the power steering unit

10 HYDRAULIC POWER STEERING PILOT LIGHT ALWAYS LIGHTED

↓

Hydraulic power steering oil level low.

– YES → Top up oil.

NO ↓

Oil pressure sender malfunction.

– YES → Check the windings and in case replace oil pressure sender.

POWER STEERING
Description

Figure 2

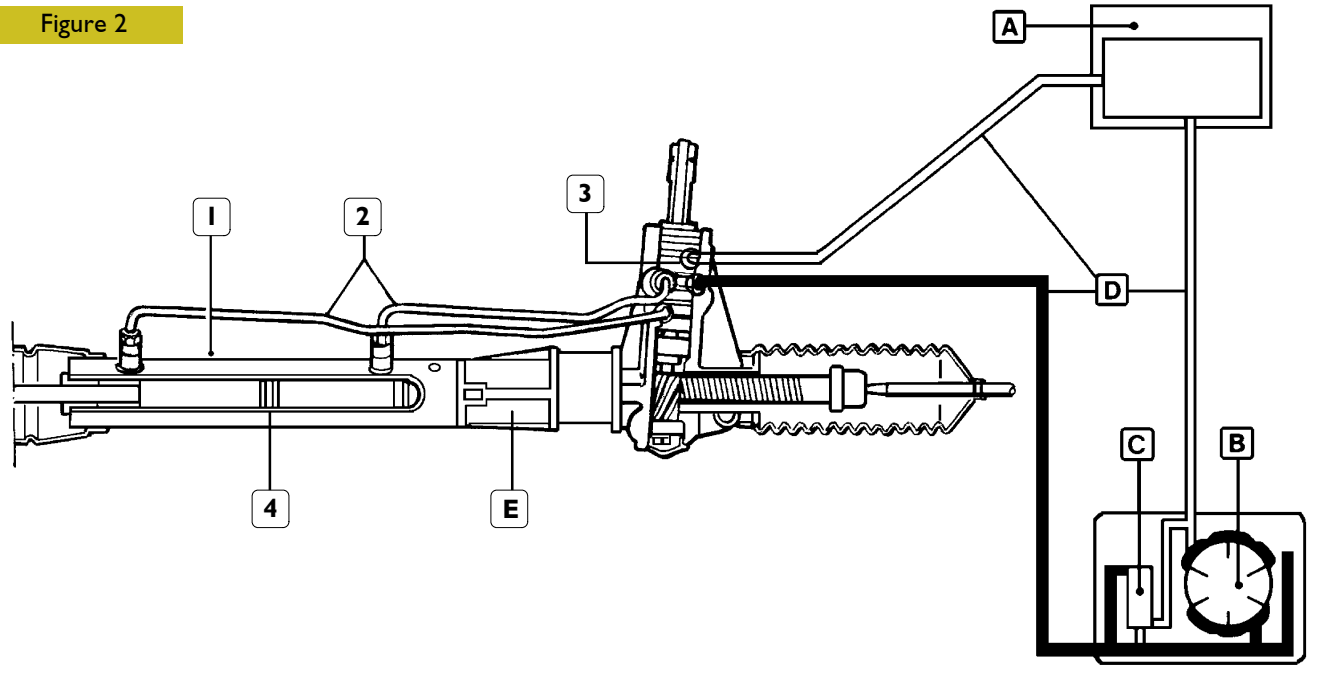

HYDRAULIC POWER STEERING SYSTEM DIAGRAM

HIGH PRESSURE LOW PRESSURE

The power steering system consists of:

- a tank (A);
- a blade pump (B) with delivery regulating valves (C);
- a series of connecting pipings (D);
- an hydraulic power steering (E).

The oil tank, in the engine compartment, feeds the blade pump. This pump is able to provide a feeding pressure ranging from a minimum of approx. 4 bar to a maximum of approx. 80 + 10. The oil come to the steering box, which is similar to a mechanical steering as for general building features, from the pump.
In fact, its operation is mechanical for pinion to rack coupling, The rack rod is joined to the wheels with two side tie rods.
The system is self-bleeding; bleeding is performed by completely steering to the right or to the left with the engine started and the vehicle stopped.
The oil level check must be performed with the engine started.

The description below concerns the TRW hydraulic power steering and due to their similarity, it also applies to the ZF hydraulic power steering.

The hydraulic part of the steering box consist of:

- a distributor (3);
- an hydraulic cylinder (1);
- a double-acting piston (4) integral with the rack rod.

The hydraulic connection between distributor and hydraulic cylinder is achieved using two stiff pipes (2). The distributor (3) is integral with the hydraulic power steering pinion.

Figure 3

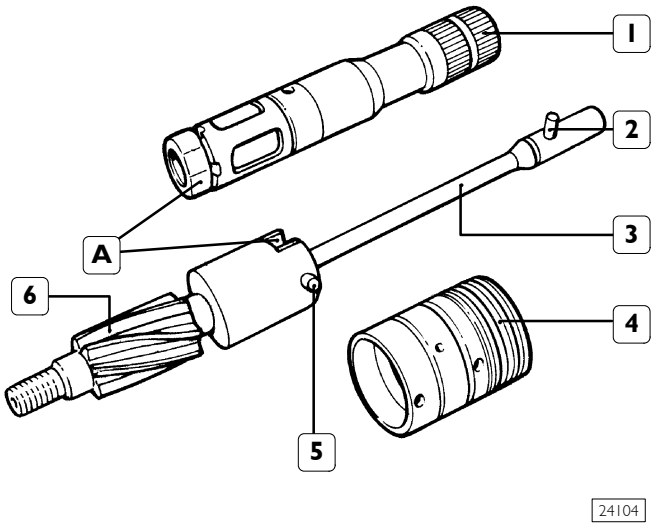

The distributor consists of:

- a drive shaft (1) (joined to the steering column);
- a distributing valve (4);
- a wrench bar (3);
- a pinion (6).

The drive shaft is elastically joined by the wrench bar to the pinion by means of the pin (2). The distributing valve, trigged on the drive shaft is integral with the pinion by means of a pin (5); it has holes and splines in order to receive and distribute the oil flow to the hydraulic cylinder. Besides, a stiff joint (A) ensures the mechanical working of the hydraulic power steering in case of failure of the hydraulic system, through a bayonet joint.

POWER STEERING TYPE TRW
Operation

Figure 4

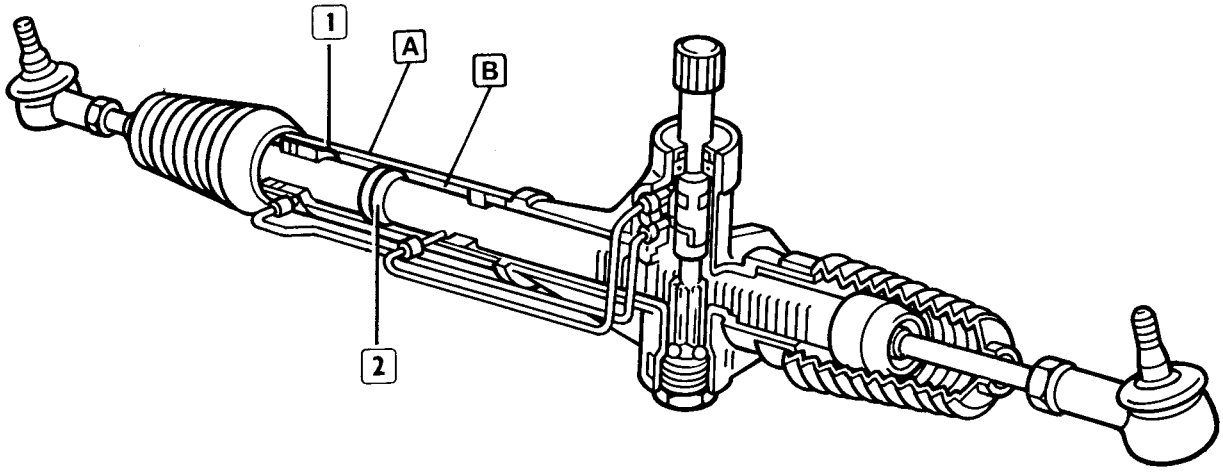

The hydraulic cylinder (1) is integral part of the hydraulic power steering, The double-acting piston (2) (integral with the rack rod) slides in the hydraulic cylinder and divides it into two separate chambers A and B.
The power steering is obtained by sending oil under pressure into one of the hydraulic cylinder chambers and discharging it into the other one. The power generated by the oil pressure on the side surface of the piston causes the movement of the piston and, as a result, of the rack. The feeding of one of the two hydraulic cylinder chambers occurs when the torque applied to the steering wheel causes the wrench of the bar; in this condition, the port of the drive shaft and the relevant ports of the distributing valve are joined depending on the rotary direction of the steering wheel. If the amount of torque applied to the steering wheel does not cause the wrench of the bar (low wheel resistance), the power steering does not intervene and the steering operates as a mechanical one.

Figure 5

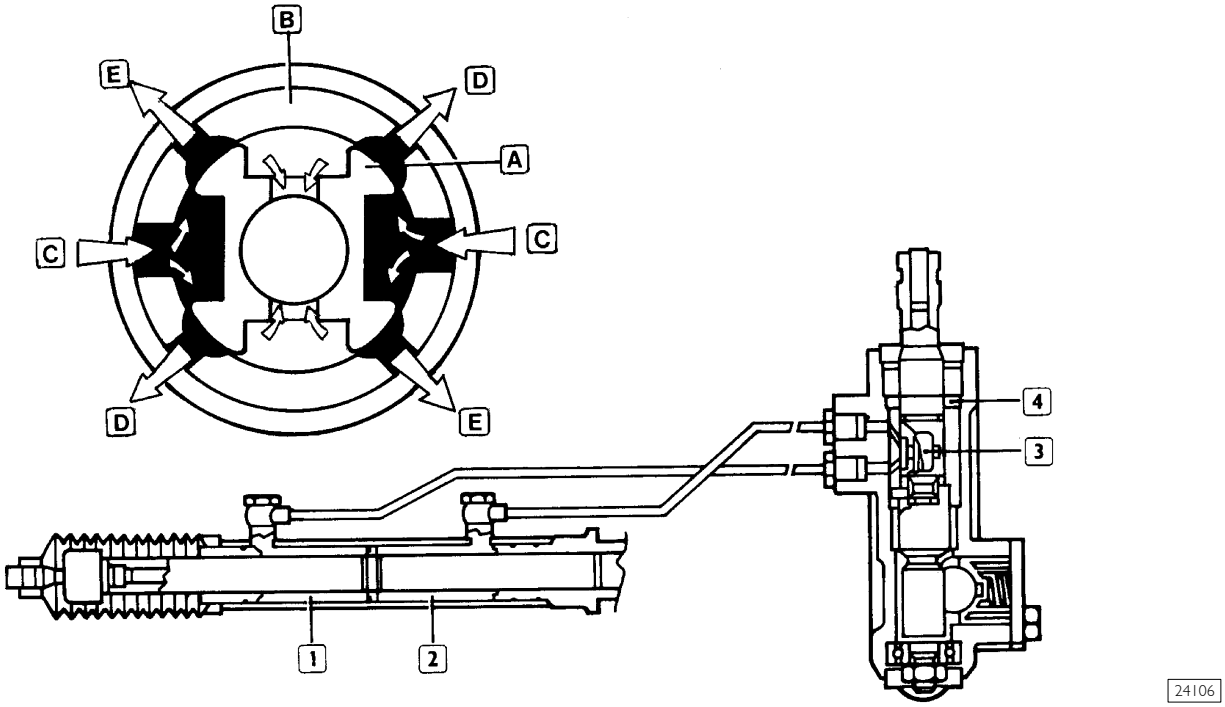

HYDRAULIC POWER STEERING OPERATION DIAGRAM: NEUTRAL POSITION

HIGH PRESSURE LOW PRESSURE

The oil coming from the pump through the joint (3) goes into the distributing valve, circulates in it and returns in the tank through the joint (4), simultaneously passing through the chambers (2) and (1).
The drive shaft (A), since it is not subject to wrench, is centred with respect to the distributing valve (B) and drives the oil coming from the pump directly into the tank through the ports (C). The chokes caused by the shaft (A) position with respect to the distributing valve (B) cause a pressure of ~ 3.5 bar in the right and left chamber through the ports (D) and (E).

Figure 6

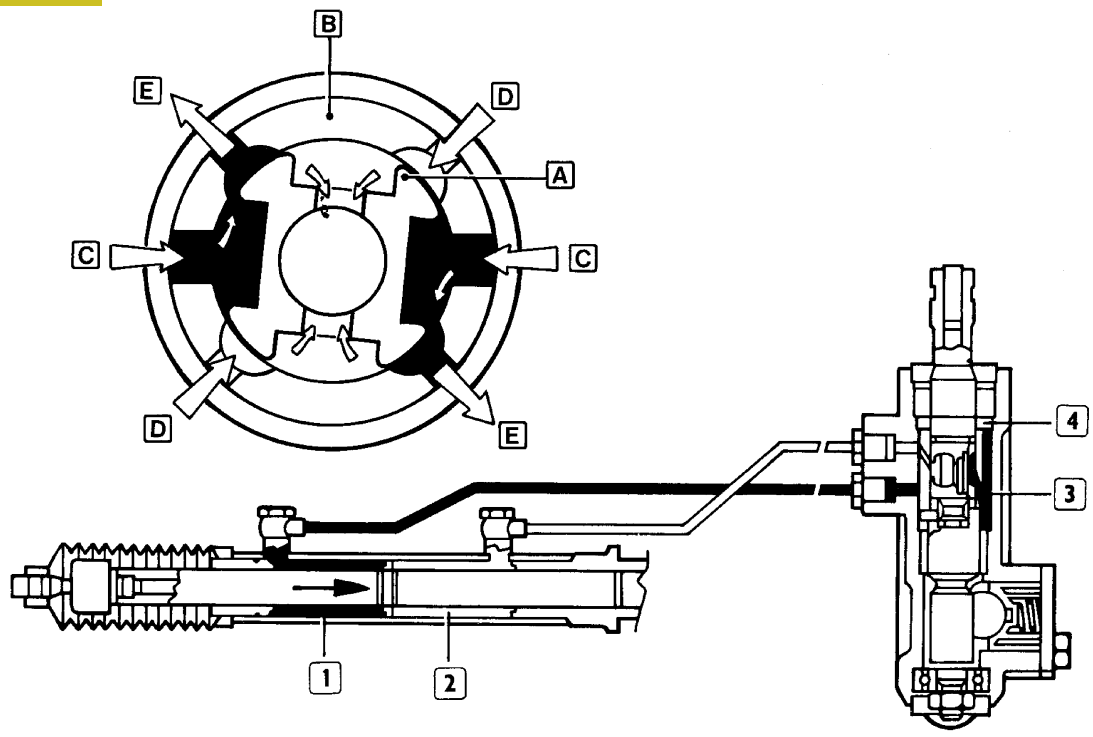

HYDRAULIC POWER STEERING OPERATION DIAGRAM: RIGHT STEERING

HIGH PRESSURE LOW PRESSURE

The oil coming from the pump through the joint (3) goes into the distributing valve and it is sent to the hydraulic cylinder chamber (1) causing the movement of the piston.
This movement pushes the oil contained into the chamber (2), through the joint (4), into the tank, passing again in the distributing valve. The movement of the piston in the direction of the arrow shows a right steering.
The drive shaft (A), rotating clockwise with respect to the distributing valve (B), drives the oil under pressure coming from the pump through the ports (C), to the left chamber along the ports (E) and joins the discharge and the right chamber circuit by means of the ports (D).

Figure 7

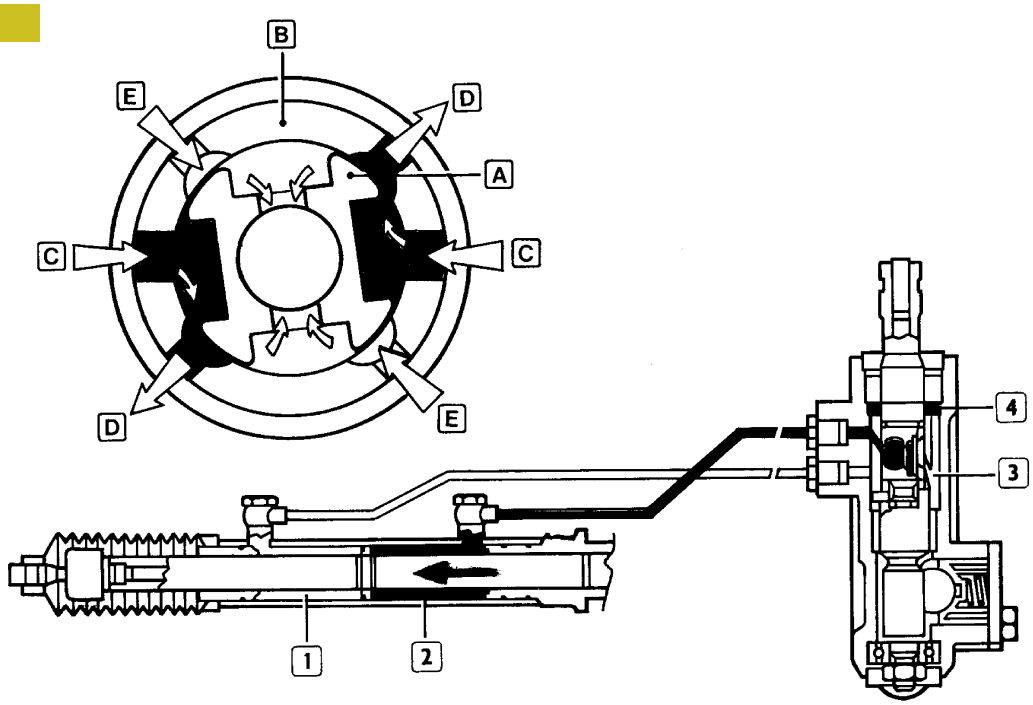

HYDRAULIC POWER STEERING OPERATION DIAGRAM: LEFT STEERING

HIGH PRESSURE LOW PRESSURE

The oil coming from the pump through the joint (3) goes into the distributing valve and it is sent to the hydraulic cylinder chamber (2) causing the movement of the piston. This movement pushes the oil contained into the chamber (1), through the joint (4), into the tank passing again in the distributing valve.
The movement of the piston in the direction of the arrow shows a left steering.
The drive shaft (A), rotating clockwise with respect to the distributing valve (B), drives the oil under pressure coming from the pump through the ports (C), to the left chamber along the ports (D) and joins the discharge and the right chamber circuit by means of the ports (E).

POWER STEERING TYPE ZF
Operation

Figure 8

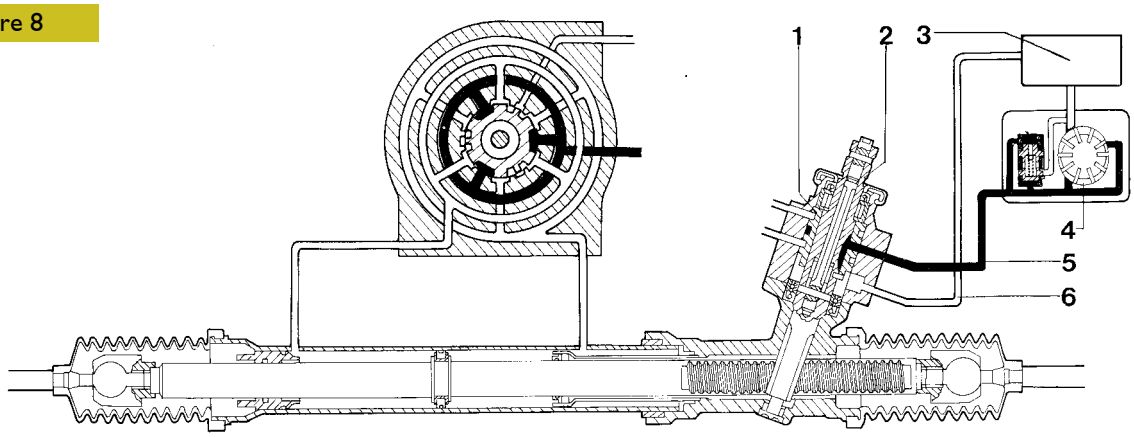

HYDRAULIC POWER STEERING OPERATION DIAGRAM: NEUTRAL POSITION

HIGH PRESSURE LOW PRESSURE

With the steering wheel positioned to straight running, the bush (2) is arranged so that the passage of both feeding and discharge oil of the operating cylinder is closed.
The oil pressures in the right and left chamber of the operating cylinder are balanced.
The oil under pressure coming from the power steering pump (4) through the piping (5) feeds the distributor (1) central grove, flows in the bush (2) splines, goes out from it and, through the piping (6) returns in the tank (3).
The neutral position of the hydraulic power steering is obtained and, therefore, the vehicle straight ride.

Figure 9

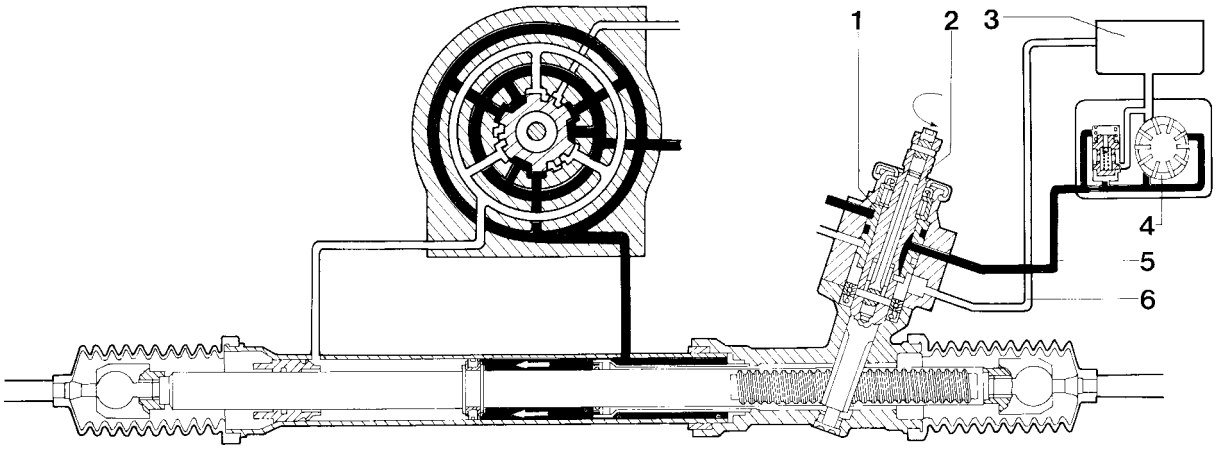

19595

HYDRAULIC POWER STEERING OPERATION DIAGRAM: RIGHT STEERING

HIGH PRESSURE LOW PRESSURE

The oil under pressure coming from the power steering (4) pump, through the piping (5), feeds the distributor (1) passing in the central groove.
The rotation of the steering wheel causes a semi-rotation of the bush (2), this one is positioned so that the oil flows in its three splines and is sent to: the distributor upper groove, in case of right steering (Figure 9), or in the distributor lower groove, in case of left steering (Figure 10). The latter sends it to the relevant feeding piping (depending on the steering direction) of the operating cylinder chambers. Meanwhile, the oil contained in the chamber opposite to the fed one returns in the distributor. From the latter one, it flows in the discharge grooves of the bush (2) then, through the piping (6), returns in the tank (3).
In this way the hydraulic interlocking is obtained.

Figure 10

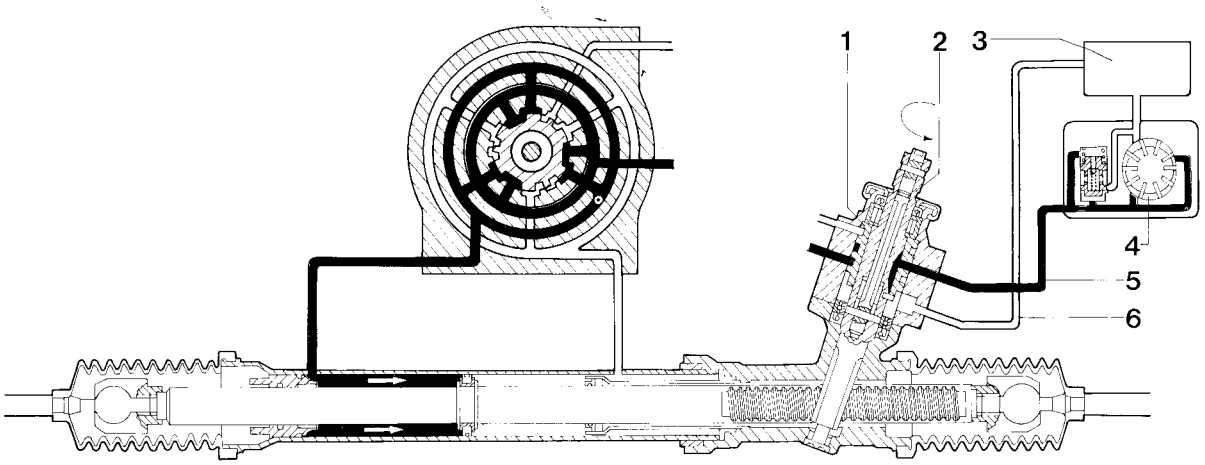

19596

HYDRAULIC POWER STEERING OPERATION DIAGRAM: LEFT STEERING

HIGH PRESSURE LOW PRESSURE

The only possible interventions on the power steering and mechanical steering systems are: replacement of ball joints, replacement of protective rubber boots, linkages and rubber bushings. Follow the instructions provided in the specific paragraphs.
Replace the power steering system if problems referred to this system only are found.

CHECKS AND OPERATIONS ON THE VEHICLE

Checking maximum pressure

Figure 11

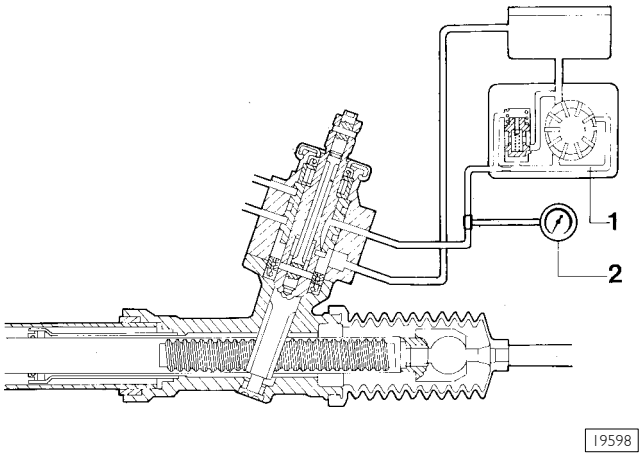

Join a pressure gauge (2) on the oil delivery piping on the power steering pump (1). Rotate the steering wheel up to the limit stop, speed up the engine and read on the pressure gauge the maximum pressure value, which mast be of 80 bar.

Checking hydraulic steering centre (for "ZF" power steering only)

Lift the front of the vehicle and put the wheels in the straight ride position.
Start the engine and fully speed up; if the steering gear put itself in steering position, the hydraulic steering centre is wrong and the hydraulic power steering must be changed.

501430 Bleeding the air from the hydraulic system

Check the oil level in the tank, if necessary top up.
Lift the front part of the vehicle, start the engine and make it idle for a certain period.
Check that there is no oil leakage from the hydraulic circuit and check the tank level.
Slowly rotate the steering wheel in the two steering directions so that the air contained in the hydraulic system goes out.
Check again the oil level in the tank and, in case top up.

520636 SWIVEL HEADS
501438 PROTECTION CASINGS

Figure 12

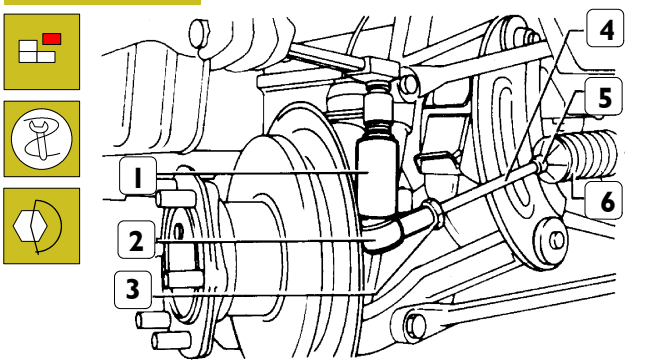

Check that the protection casings of the knuckle heads are in perfect condition and that their pivots do not present play, otherwise replace them as described below.
Loosen the nut (3) securing the knuckle head (2) to the tie rod (4).
Remove the nut fixing the knuckle head to the steering gear lever and using the extractor (1) 99347074 remove the knuckle head.
Unscrew knuckle head from the tie rod of the steering box noting down the number of turns needed to disassemble.
Remove the fixing brackets (5) and extract the protection casing (6).
In order to re-fit the assembly, perform the above operation in reversed order, sticking to the following instructions:

- ❑ carefully clean the steering gear tie rod knuckle;
- ❑ lubricate the protective boot seats on the power steering box to facilitate assembly;
- ❑ screw up the knuckle head with the same number of turns used to disassemble it;
- ❑ fit a new o-ring on the power steering box;
- ❑ tighten the nuts of the prescribed torque;
- ❑ Adjust toe-in as shown in the respective section.

501410 STEERING GEAR CONTROL

Vehicles equipped with an Air-Bag

Before doing any work on steering gear control components:

- ❑ steering wheel;
- ❑ steering control lever system;
- ❑ steering gear shaft

Strictly observe the safety standards described in the following paragraphs for Air-Bag system components.

SAFETY STANDARDS TO BE OBSERVED DURING REPAIR OR MAINTENANCE OPERATIONS ON VEHICLES EQUIPPED WITH AIR-BAG SYSTEM PROVIDED BY SUPPLIER

The following Standards shall be strictly observed when performing any type of repair or maintenance operations on vehicles equipped with Air-Bag safety system.

Preliminary Standards

Air-Bag modules shall be handled with the utmost care. Use, transport and storage of these components are governed by the handling procedures described in the following paragraphs.

Before starting any bodywork repair operation, welding or whatever work requiring to remove the Air-Bags or the control unit, proceed as follows:

- set ignition key to "STOP" and take it out;
- always disconnect the battery, i.e.: disconnect the two terminals from the relevant pole and insulate them properly by tape;
- wait for at least 10 minutes before proceeding;
- disconnect control unit connector.

Store modules with the cover set upwards, inside a metallic key-locked cabinet that must be used just with this purpose and that must not contain other type of materials, especially if flammables.

Adopted connectors wired to Air-Bag modules are provided with short-circuit clip. It is impossible to activate units accidentally until Air-Bag modules are connected to a power source with suitable properties.

A system component not activated in case of collision is to be considered still "live" (active).

Live components that shall be removed from vehicles (due to defects, warranty expiry or other reasons) shall be returned to the suitable Centre using the following procedure.

Component removal and refitting shall be performed EXCLUSIVELY by skilled and authorised personnel. Failure to comply with the following procedure can result in unintentional activation of the system, severe injury or repairs not required. IT IS ABSOLUTELY FORBIDDEN TO DISASSEMBLE Air-Bag MODULE COMPONENTS.

System components are designed to operate just on vehicles of the specified make and type. Air-Bags must therefore not be adapted, reused or installed on other vehicles.
Mount and use them only on the vehicles for which they have been designed and produced.

Any reuse, adaptation or installation on a different type of vehicle can result in sever injury or death for passengers in case of collision.

Repairs and inspections required after an accident

Any safety system component damaged after an accident must be replaced.
Do not attempt to repair the control unit, the coil cable or the Air-Bag modules.

Accidents with or without Air-Bag module activation

Certain system components must be inspected after any crash, whether the Air-Bag deployed or not. These components are the following:

- steering column;
- steering column support;
- electronic control unit anchoring area and modules;
- coil cable;
- dashboard (in the area of the passenger Air-Bag).

If any faulty condition is found, replace the faulty component.

Accidents with Air-Bag module activation

In case of front impact with total system activation, the following components must be replaced:

- Air-Bag modules;
- pretensioners;
- electronic control unit;
- coil cable.

Inspect cables and connectors to find any burning, external insulation melting or damages due to excessive heat.

If any faulty condition is found on coil cable, electronic control unit anchoring area and modules, replace the faulty component.

Painting

Since modules and pretensioners are designed to withstand the temperatures developed during standard baking operation on bodywork, no special safety requirement shall be observed during painting or baking.
Do not use open flames when working near the modules.
Electronic control units (including the Air-Bag one) shall always be removed when temperature in certain rooms is equal to or exceeds 85°C.

Risks for health

Precautions to be observed when handling live Air-Bag are the following:

- ❑ wear protective polyethylene gloves and goggles;
- ❑ wash hands and any exposed body part with water and soap after handling live modules.

Overexposure effects

Since system is completely sealed there is no potential danger of exposure to propelling gas.
Propelling gas mixture is at solid state, it is therefore impossible to inhale gas even in case of gas generator cartridge breakage.
There is no risk for health in case of gas leakage.
Avoid in any case contact with the skin and do not swallow the propelling gas.
In case of:

- ❑ contact with the skin: rinse immediately with water and soap;
- ❑ contact with eyes: rinse immediately with fresh water for 15 minutes at least;
- ❑ inhalation: bring immediately the injured person to open air;
- ❑ swallow: make the injured person vomit if conscious.



Always call the doctor in any of the above cases.

Safety Standards to observe when handling Air-Bag modules

Driver and passenger Air-Bags usually activate in case of collision through the action of the electronic activation control. Gas (mainly nitrogen) produced under these conditions are not toxic.
Personnel operating on safety system shall strictly observe the following safety standards.
Personnel operating on these devices shall be suitably trained and must observe the following precautions:

- ❑ when removing or replacing activated Air-Bags, wear protective polyethylene gloves and goggles and handle just one module at a time;
- ❑ always place the Air-Bag module with the cover and exhaust hole upwards. Never put something on Air-Bag cover;
- ❑ once servicing is over rinse hands with water and neutral soap, in case of eyes contact with residual powders rinse immediately with fresh water;
- ❑ before starting servicing, disconnect both battery cables (first the negative one), insulate terminals by tape and wait at least 10 minutes before proceeding;
- ❑ metal components of the Air-Bag are hot after explosion, avoid to touch these components for at least 20 minutes from module activation;
- ❑ do not repair Air-Bags but send faulty modules to supplier. Do not heat the Air-Bag module by welding, percussion, drilling, mechanical machining, etc.;
- ❑ never install on vehicle a damaged or fall Air-Bag module;
- ❑ it is prohibited to store Air-Bag modules together with flammable material or fuels;
- ❑ gas generators must not come into contact with acids, greases or heavy metals since contact can result in formation of poisonous, noxious gas or explosive compounds;
- ❑ never use open flames when working near Air-Bag modules or system components.

Spare parts shall be stored in their original package and temporary storing shall follow the same procedure as for live modules disconnected from vehicle, i.e. storage into dedicated metallic key-locked cabinet (resistant to shocks and provided with grids to enable natural ventilation). Cabinet shall be provided with proper warning plates (RISK OF EXPLOSION - NO OPEN FLAMES - NO OPENING BY UNAUTHORISED PEOPLE).

Air-Bag module scrapping

Air-Bag modules must not be scrapped together with the vehicle, but must be previously removed and activated as described in the following pages.
Air-Bag units must always be activated before scrapping.
An Air-Bag module not exploded during an accident is to be considered still "live".
Live materials MUST NOT BE ACTIVATED but must be sent to a specialised centre (in Italy to GECMA in Chivasso) specifying on the freight note:

- ❑ **Air-Bag DEVICE CONTAINING PYROTECHNIC CHARGE TO BE DEACTIVATED.**

Devices must be sent using their original packages only. Should the original package be not available, a new one shall be requested to SPARE PARTS.
In case of Air-Bag device replacement, the original package shall obviously be kept in good conditions to send the non-activated device.

FOREIGN MARKETS shall observe local current laws and regulations.



Failure to observe these procedures can result in unintentional Air-Bag module activation and severe injury. Live Air-Bag units must NOT be disposed of using the common disposal procedure. Live Air-Bag units contain substances dangerous for health that can cause severe injury if the sealed container is damaged during disposal.

Safety Standards to observe when handling pretensioners

In case of front impact, driver and passenger pretensioners usually activate just a minute before Air-Bag modules
Personnel operating on these devices shall be suitably trained and must observe the following precautions:

- ❑ when handling activated pretensioners, i.e. with activated propelling gas, wear protective gloves and goggles;
- ❑ once servicing is over rinse hands with water and neutral soap, in case of eyes contact with residual powders rinse immediately with fresh water;
- ❑ disconnect both battery cables (first the negative one), insulate terminals by tape and wait at least 10 minutes before proceeding;
- ❑ pretensioner produce heat during activation, it is therefore necessary to wait at least 10 minutes before operating;
- ❑ protect pretensioners against fall or shock during handling or transport; damaged or fallen pretensioners must not be used and must be returned to supplier communicating the reason for;
- ❑ never carry pretensioners by the seat belt;
- ❑ pretensioners must be protected against sparks and open flames and must not stay in contact with surfaces with temperatures exceeding 100°C for more than 6 hours;
- ❑ propelling gas not burnt is flammable, therefore generator components must never be disassembled, damaged or tampered;
- ❑ it is prohibited to store pretensioners together with flammable material or fuels;
- ❑ gas generators must not come into contact with acids, greases or heavy metals since contact can result in formation of poisonous, noxious gas or explosive compounds;
- ❑ seat belts with pretensioners shall be stored in proper key-locked compartments or cabinets, suitably aerated and away from open flames and heat sources.

After any impact involving pretensioner activation, the seat belt is unserviceable and must be replaced.

Pretensioners scrapping

Non-activated pretensioners (not installed on vehicle) must always be activated before scrapping. Non-activated pretensioners installed on vehicle must not be scrapped together with the vehicle, but must be previously removed.
Pretensioner not activated during an accident is to be considered still "live" and therefore it is necessary to follow the procedure described in this manual.

Operations on system components

Once servicing operations are completed, the system shall be tested by Modus, I.W.T. or equivalent diagnostic equipment.
Air-Bag components are provided at installation with a label with a removable part showing system and components date of installation.
The removable part is detached and data are stored together with the test report provided by Modus, by the workshop that has installed the components.
After 10 years from installation, unless prior replacement, a new Air-Bag system (cable and components) shall be installed. As said above components technical data and the date of installation will be filed.

Removing and scrapping activated Air-Bag module and pretensioner from vehicle

Always wear gloves and goggles when handling activated Air-Bag or pretensioner. Wash hands and exposed skin with water and neutral soap after handling activated Air-Bag or pretensioner. In case of exposure to secondary products, rinse eyes immediately with fresh water. Failure to observe these indications can result in severe injury.
To remove and scrap activated Air-Bag module and pretensioner proceed as follows:

- ❑ follow instructions contained in this manual to remove activated Air-Bag module and pretensioner;
- ❑ disconnect Air-Bag module and pretensioner mechanical fixings;
- ❑ disconnect component connector form Air-Bag wiring;
- ❑ put Air-Bag module and pretensioner in the proper sealed nylon bag;
- ❑ send to authorised collection/disposal centre;
- ❑ dispose of, recycle or scrap deployed Air-Bag module and pretensioner using the suitable procedure.

Propelling gas residues shall be considered with attention. These residues that are mostly concentrated on the generator body or in small amount in the bag can contain copper or chlorides (e.g. potassium chloride). Combustion residues are very alkaline and corrosive.
Always wear skin protections and goggles. Activated Air-Bags must always be stored in dry and well ventilated places.

Removing and scrapping non-activated Air-Bag module from a repairable vehicle

Never cut the cables or tamper the connector between vehicle wiring and Air-Bag module. Connector contains a safety clip.

If connector is cut or removed from Air-Bag unit, the safety clip is disabled and this can result in unintentional activation and severe injury.
Air-Bag systems have a backup power supply located in the control unit. This power supply shall be deactivated by disconnecting the two battery terminals and waiting for at least 10 minutes before starting any operation on whatever Air-Bag component.
Keep the bag and the external bag cover in opposite direction to body when handling a live Air-Bag module. When placing a live Air-Bag on the bench or some surface like that, set the bag and the cover facing upwards and far from people. Never place objects near a live Air-Bag, since in case of module deployment objects will be thrown away like shells.

Always store live Air-Bag modules an pretensioners in fresh, dry, close and safe place. Do not expose to open flames or temperatures exceeding 150°C. Never cut, drill, solder or weld an Air-Bag module or its components. Failure to observe these indications can result in unit damages, fire, unintentional deployment and severe injury.

Damaged live Air-Bag modules and pretensioners (e.g. electric connection breakage), shall be store far from corrosive or oxidising substances. Failure to observe these indications can result in fire and/or severe injury.

Air-Bag modules and pretensioners are provided with backup power supply giving the electrical pulse required to bag deployment when the accident damages the battery or the cables before the sensor activates the gas generator.

Figure 13

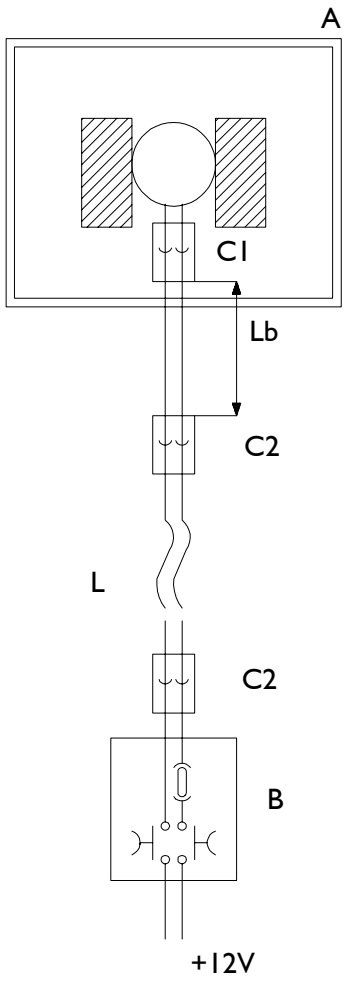

AIR-BAG MODULE REMOTE ACTIVATION DIAGRAM

C1 = Air-Bag module connector
C2 = remote activation device connector (Air-Bag connector with safety clip, counterparts with male pins on Air-Bag side)
Lb = braid length = approx. 1 m
L = main cable, safety distance 10 m
A fenced area
B Remote activation device

Air-Bag module deployment
Remote activation

General instructions:

- ❑ activation procedure can be performed in open area, suitably defined and fenced, far from flammable materials, liquids or other substances and far from people. Set the Air-Bag module on a firm surface and lock it;
- ❑ clean this area from any material (glass, instruments, parts, etc.) which could become like shells during deployment;
- ❑ check whether connector C2 is disconnected from remote activation device (10 m).
- ❑ connect electric connector C1, specified by vehicle manufacturer, to remote activation Air-Bag module;
- ❑ connect connector C2 to remote activation device;
- ❑ connect remote activation device to 12V circuit or equivalent device;
- ❑ stand protected;
- ❑ wear goggles and protective clothes;
- ❑ depress double activation push-button;
- ❑ wait for approx. 20 minutes before touching the activated Air-Bag module since it is hot;
- ❑ dispose of, recycle or scrap, as required, activated Air-Bag modules as described in the relevant chapters.

Activating Air-Bag modules and electronic pretensioners installed on unrecoverable vehicles

This procedure is to be used when scrapping a vehicle with one or more live Air-Bag modules. This procedure is valid whether Air-Bag system and/or electronic pretensioners are sound or not.
It is recommended to activate pyrotechnic charges on vehicles by directly connecting the electric connector of each module to remote activation device.

Deployment procedure shall be performed outdoor, away from people and in a well defined area. Check for absence of objects and flammable fluids near modules and pretensioners. Do not remain on the vehicle during activation and remember to close the doors. Stand protected (e.g. behind a wall, a vehicle, etc.) against thrown-away objects, if any. Let generators and modules cool down after deployment (20 min. at least before proceeding). Failure to observe these indications can result in severe injury.

General instructions:

- ❑ follow all WARNINGS, PRECAUTIONS and safety instructions reported in this manual;
- ❑ bring the vehicle outside in the provided area;
- ❑ remove from the area around the Air-Bag covering all materials and slugs (glasses, tools, components etc.) and make sure that no inflammable liquids are nearby;
- ❑ disconnect the two battery cables (first the negative cable) and wait for at least 10 minutes before proceeding;
- ❑ use a connecting braid (L= about 1 m) with specific terminal connector for the electric connection with the module to activate;
- ❑ reach the electric module connection (Air-Bag or electronic pretensioner), following the instructions of this manual;
- ❑ disconnect connector C1 of the pretensioner or Air-Bag module;
- ❑ check whether connector C2 is disconnected from remote activation device;
- ❑ connect the electric connector C1 of the pretensioner or Air-Bag module to the connecting braid of the remote activation device;
- ❑ connect connector C2 to remote activation device;
- ❑ place people in a safe place;
- ❑ connect the remote control device to a 12 Volts circuit or equivalent device;
- ❑ press the double activation push-button to activate all pretensioners and Air-Bag modules at the same time;
- ❑ after activating the Air-Bag modules and pretensioners, leave them cooling before touching them (about 20 minutes);
- ❑ after activating the Air-Bag modules and pretensioners, the vehicle can be scrapped - by squashing or crushing - and/or recycled, depending on the cases.

Figure 14

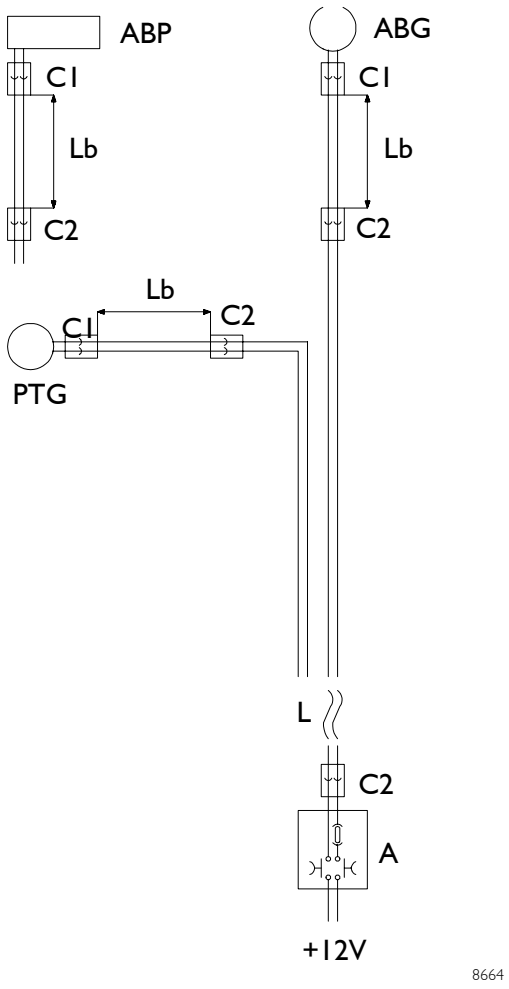

VEHICLE PYROTECHNIC CHARGES ACTIVATION DIAGRAM, SINGLE ACTIVATION

ABG = driver Air-Bag
ABP = passenger Air-Bag
C2 = remote activation device connector
C1 = specific pyrotechnic charge connector
L = main cable, safety distance 10 m
Lb = braid length
PTG = driver pretensioner

A. Remote activation device

541415 Upper steering gear shaft removal

Figure 15

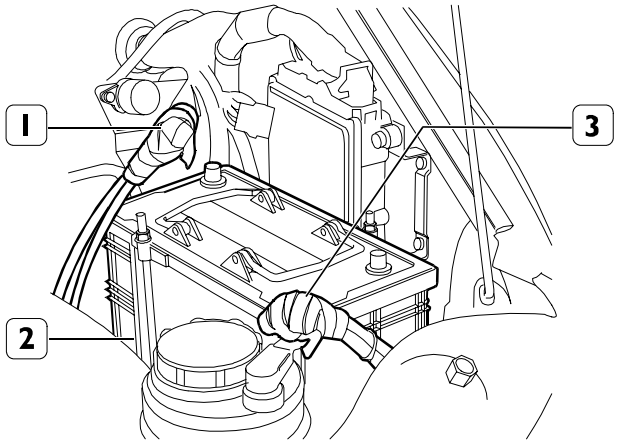

Disconnect the battery (2) cables (1-3) first the negative cable (1) then the positive one (3) and insulate them taping the terminals.

For vehicles equipped with Air-Bag

Follow the safety standards given in the relevant chapter and wait for 10 minutes before proceeding.

Figure 16

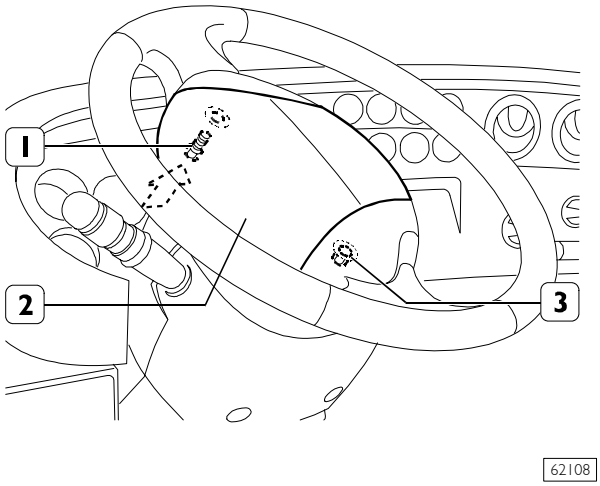

For vehicles without Air-Bag, remove the pressure-fit cover (2) on the steering wheel.
For vehicles with Air-Bag, turn the steering wheel and position it as shown in the figure, in order to easily reach the screws (1 and 3) and remove them.

Figure 17

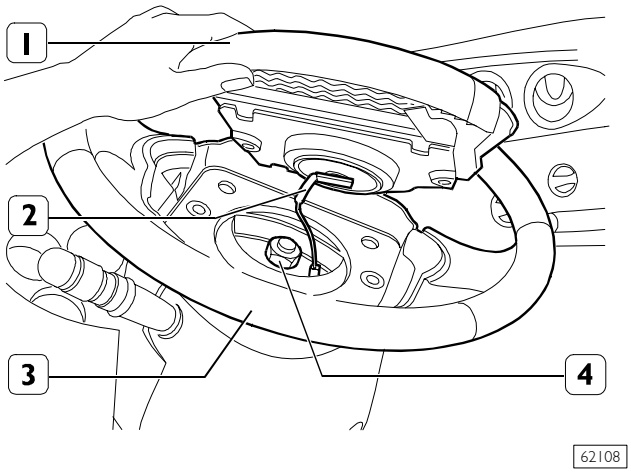

- ❑ Lift the Air-Bag module (1) in order to disconnect connector (2);
- ❑ Remove the Air-Bag module (1) from the steering wheel (3).

After removal, non-activated Air-Bag modules must be stored with plate laying on the surface in a suitable key-locked cabinet.

For all vehicles

Remove fixing nut (4).

Figure 18

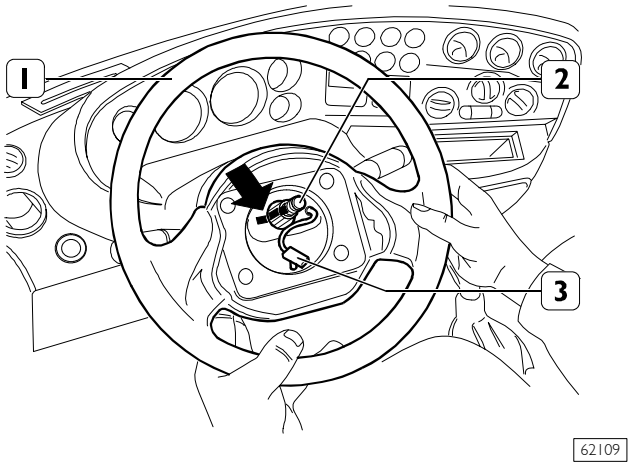

Set front wheels in straight running and mark (→) steering wheel assembly position (1) on upper steering gear shaft (2) Remove the steering wheel (1) from the shaft (2).
For vehicles with Air-Bag, make sure not to extract or damage coil device cable (3).

Make sure that steering wheel removal has lifted the top cap of the coil device. If the top cap turns, it will be necessary to block it by bringing it to the outside. If you hear a "click", it means that the cap is blocked. To remove the coil device, carefully follow the instructions contained in the repair manual, "Electric system" section, publication with print No. 603.43.371.

Figure 19

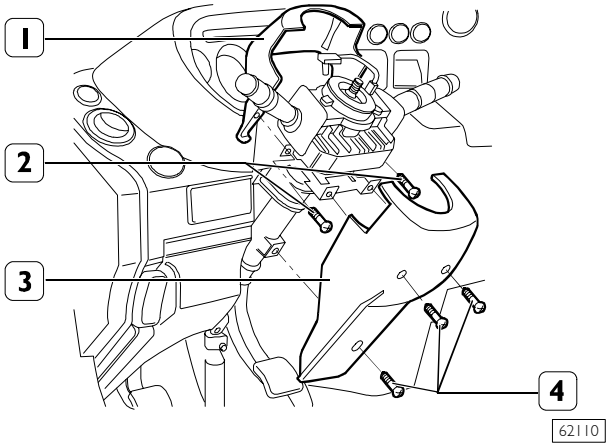

Remove the two screws (2) and remove the upper protection (1). Remove the three screws (4) and remove the lower protection (3).

Figure 20

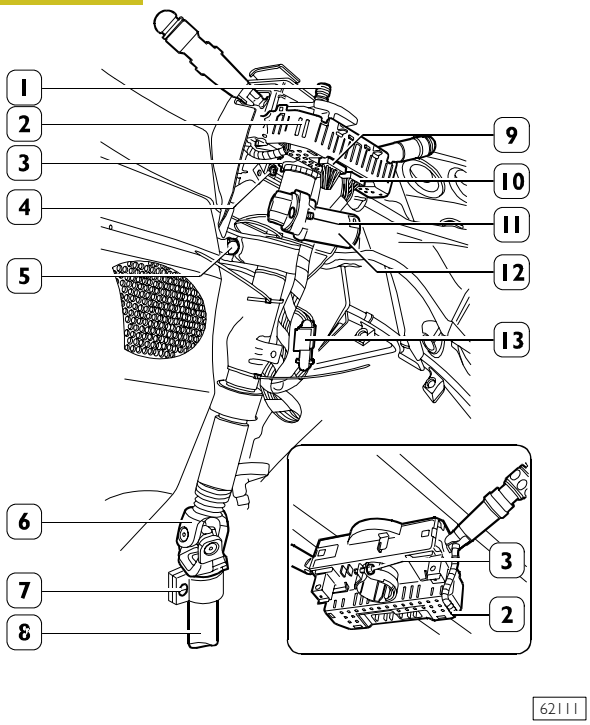

Cut electric cable fixing clamps and disconnect connectors (9-10-13). Loosen screw (3) locking indicator switch retaining clamp to gear shaft (1).
Remove the indicator switch (2) from the gear shaft (1).

Mark universal joint (6) assembly position on lower shaft (8) and loosen the fixing screw (7).
Remove the screws (4-5) and disconnect the upper steering gear shaft (1) from the lower steering gear shaft (8).
To replace or disassemble switch (12) it is necessary to unscrew screws (11) using a proper punch or drill them in order to eliminate the most of material to remove them. Make sure not to damage switch thread in case of reuse.
At refitting, the new screws (11) must be tightened till the hexagonal head is sheared from its rod.

Refitting

For refitting reverse removal operations and observe the following recommendations:

- ❑ reconnect shafts and refit steering wheel matching the marks made during removal operations;
- ❑ at refitting, the self-braking nuts and the steering wheel fixing nut must always be replaced;
- ❑ tighten nuts and screws to the prescribed torque;
- ❑ after tightening steering wheel fixing nut to upper shaft, it is necessary to crimp the nut;
- ❑ when refitting is completed, carry out operation test on indicator switch and horn.

541413 Lower steering gear shaft removal

Figure 21

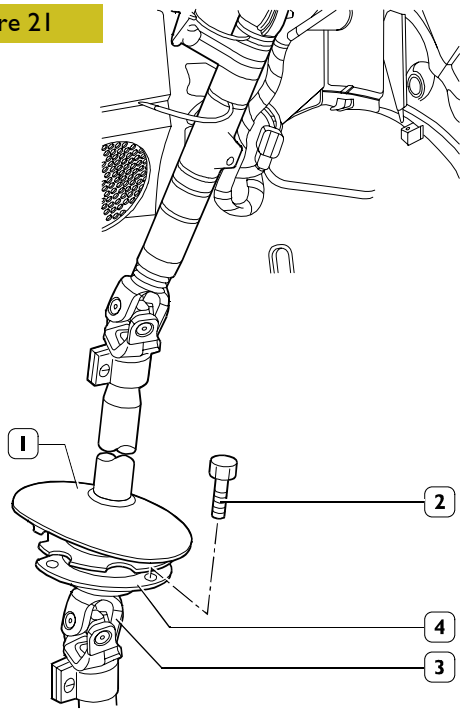

Remove the upper steering gear shaft as described in the relevant chapter (operation 541415). Lift cover (1) from floor. Unscrew the three fixing screws (2) of lower shaft (3) support (4).

Figure 22

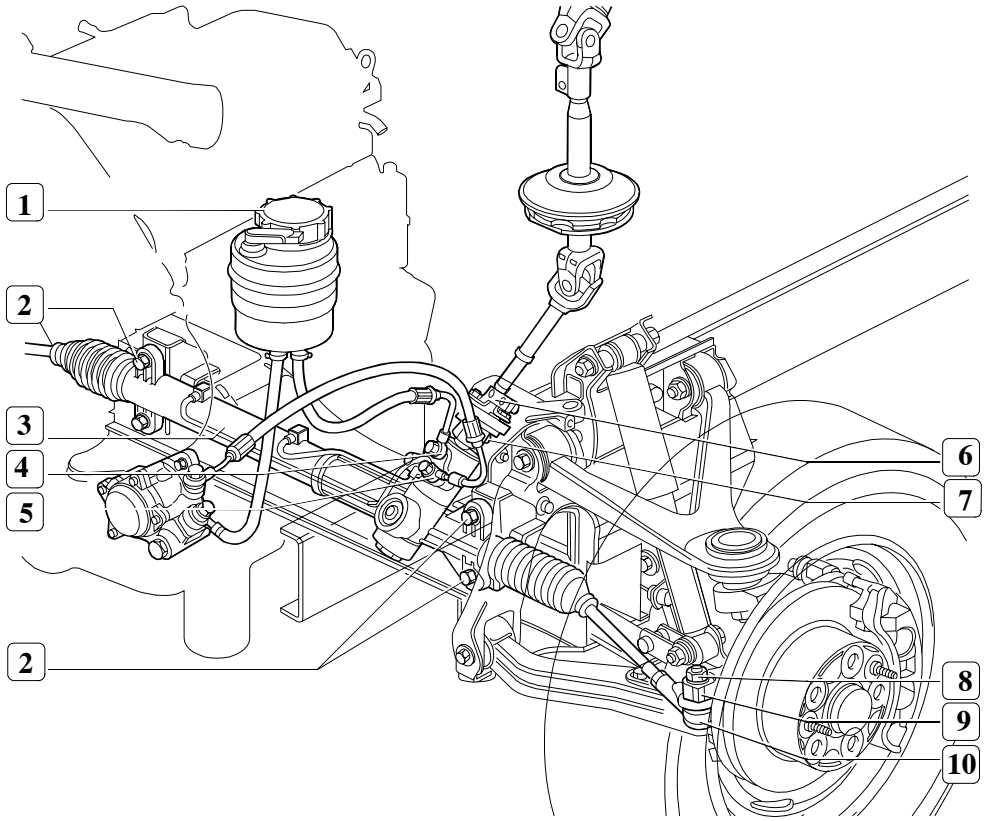

Mark universal joint (6) assembly position on hydraulic power steering (3) shaft.
Loosen screw (7) and remove hydraulic power steering lower shaft.

Refitting

For refitting reverse removal operations, complying with upper steering gear shaft refitting operations.

5014 HYDRAULIC POWER STEERING
541413 Hydraulic power steering removal

Proceed as follows to remove the hydraulic power steering:
Loosen front wheel fixing screws or nuts.
Lift the front part of the vehicle, support it by proper stands and brake rear wheels.
Position tool 99321024 near the wheels, remove wheel fixing screws or nuts. Remove the wheels.
Remove cap (1) from hydraulic power steering oil tank.
Disconnect pipes (4-5) from hydraulic power steering (3) and drain system oil into a suitable container.
Steer wheel hubs in both directions to drain out oil from the system.
Remove nuts (8) fixing kingpins (10) to steering levers (9) and remove the latter using extractor 99347074.
Loosen the screw (7) fixing the universal joint (6) to the hydraulic power steering shaft (3).
Remove the fixing screws (2) and remove the hydraulic power steering (3).

Refitting

For refitting reverse removal operations and observe the following recommendations:

- ❑ after refitting the hydraulic power steering to the front cross member or to the driving axle, turn the pinion up to bring the rack to the end of the stroke. Turn again the pinion to the opposite direction for a number of turns equal to half of the turns required to the rack to complete the whole stroke (approx. 2 turns);
- ❑ in this position, set steering wheel in straight running condition and connect the elastic joint to hydraulic power steering pinion fork or the universal joint to the hydraulic power steering.
- ❑ At refitting, the self-braking nuts must not be reused but replaced with new ones.
- ❑ tighten screws and nuts to the prescribed torque;
- ❑ fill hydraulic power steering system tank in and carry out the drainage as described in the relevant section;
- ❑ check and adjust toe-in as described in the relevant section.

The only repair operations to carry out on hydraulic power steering and mechanical steering are the following: joint head replacement and rubber boots replacement. In these cases, follow the operations described in the relevant section.
If defects depending only on the hydraulic power steering are found, replace it.

Steering linkage replacement

Removal

Figure 23

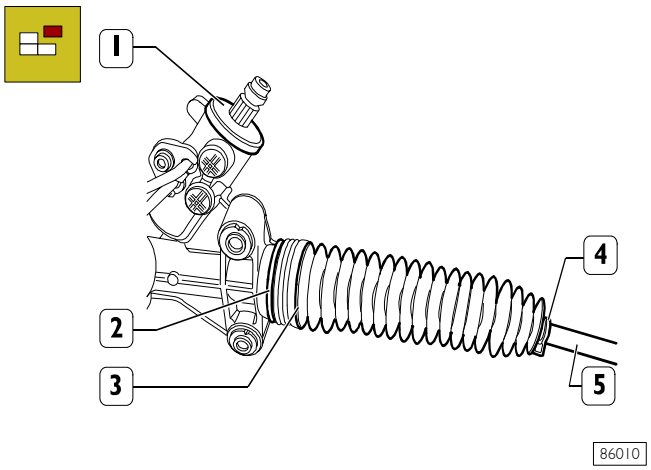

Use suitable pincers to loosen the retainer clamps (2 and 4), remove the protective boot (3) from the power steering box (1) and move it aside to access the steering linkage connection (5) to the rack rod.

Figure 24

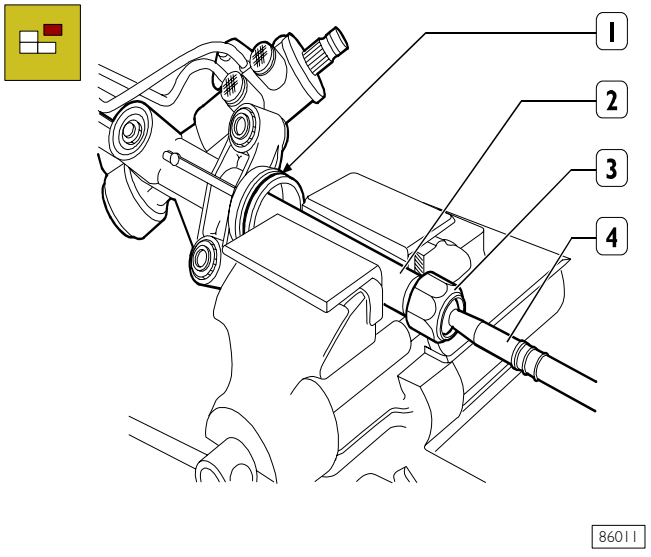

Tighten the rack rod (2) in a vice with lead covered jaws, loosen the joint (3) and remove the steering linkage (4). Remove the o-ring (1). Repeat the operations to remove the opposite steering linkage. Follow the removal/refitting operations described in the respective sections to reuse ball joints.

Do not take the rack rod (2) to end of stroke after removing the linkage (4) to avoid damaging the power steering o-rings.

Refitting

Figure 25

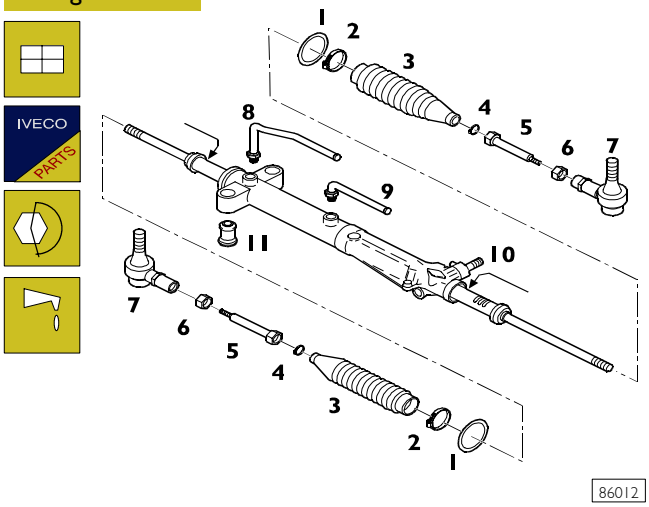

POWER STEERING SYSTEM SPARE PARTS

1. O-ring - 2. Clamp - 3. Protective boot - 4. Clamp - 5. Steering linkage - 6. Nut - 7. Head - 8. Tube - 9. Tube - 10. Power steering unit - 11. Rubber bushing.

Reassemble by reversing the disassembly sequence; observe the following precautions:

- ❑ replace o-rings (1) and clamps (2 and 4) with new parts;
- ❑ lubricate (→) protective boot (3) seats on power steering unit (10) to facilitate assembly of the boots;
- ❑ tighten steering linkage joints (5) at 100 ± 10 Nm (10 ± 1 kgm).

Rubber bushing replacement procedure

Use a suitable ram to remove/refit rubber bushings (11).

501450 POWER STEERING PUMP

Figure 26

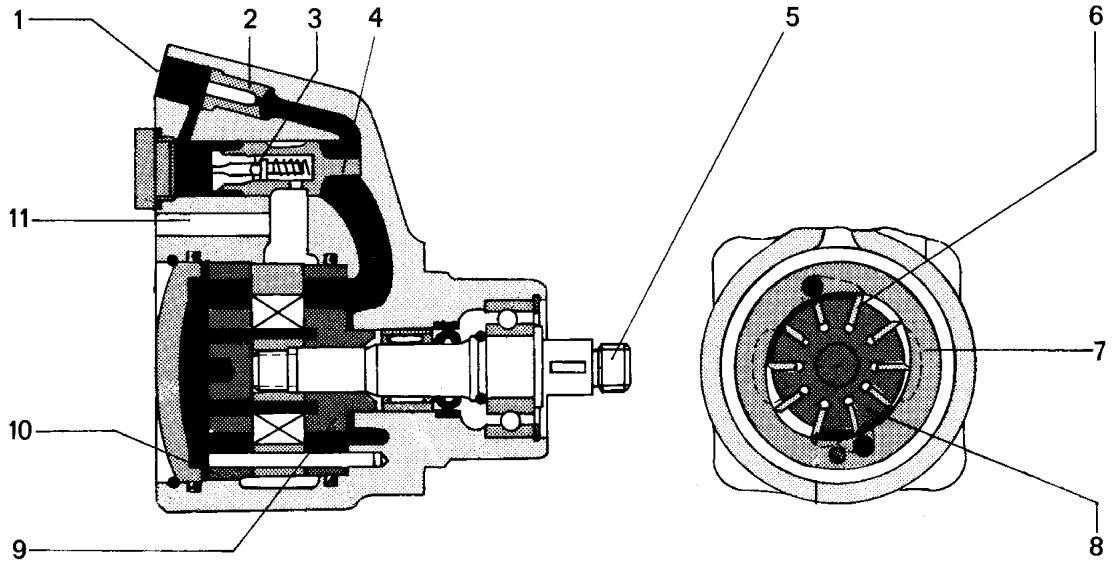

8140 ENGINE POWER STEERING PUMP OPERATION

HIGH PRESSURE LOW PRESSURE

8140 engine power steering pump

Operation

Rotating the shaft (5) and the rotor (8) joined to it and the blades (6) able of a radial motion, are pressed by their centrifugal force and by the oil pressure against the guide track of the stator (7).
Each couple of near blades forms a chamber, which has as side limits thrust plates (9 and 10).
The suction and delivery chambers are arranged so that the radial hydraulic stresses exerted on the rotor (8) balance one another.
Four splines both made on the front plate cover side (10) and in the internal plate (9), make the oil under pressure reach the surfaces of the blades directed to the rotation centre, helping in this way the centrifugal force.
The oil coming from pressure chambers comes to the delivery relief valve through holes and then, through a choke (2) at the delivery joint (1)
The oil under pressure downstream the choke is sent, through suitable holes, to the side fitted with spring of the delivery relief piston (4).
Increasing the number of turns, and therefore the pump delivery, an increasingly higher difference in pressure between the chambers upstream and downstream the choke is caused on the side fitted with spring of the piston (4).
As soon as the hydraulic force (pressure difference multiplied by the piston surface (4)) exceeds the spring force, the piston moves leftward so that the exceeding oil returns in the suction channel (11) of the pump, through the free hole. In this way the steering gear is fed by a delivery of hydraulic oil almost constant at any speed of the pump (and therefore of the engine).
An overpressure valve (3) is fitted in the delivery relief piston (4).
When an overpressure occurs in the hydraulic circuit, the oil pressing on the valve (3) increasing the pressure, overcomes the spring resistance and through an hole, discharge in the suction channel (11) of the pump.
In this way, the oil pressure adjustment is obtained.

F1A engine power steering pump

Operation

Figure 27

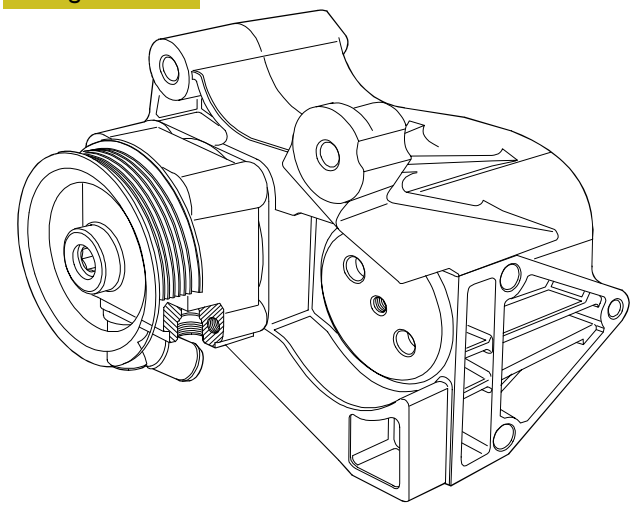

Operation of the power steering pump for FIA engines is similar to that of 8140 engines.

Power steering pump overhaul procedure

Replace the power steering pump if poor operation is found.

SECTION 11

78 Hydro-pneumatic system

52 Brakes

	Page
GRAPHIC SYMBOLS FOR AIR/HYDRAULIC SYSTEM CIRCUIT DIAGRAMS (MISCELLANEOUS AND GENERATORS) . .	3
GRAPHIC SYMBOLS FOR AIR/HYDRAULIC SYSTEM CIRCUIT DIAGRAMS (VALVES) . . .	4
GRAPHIC SYMBOLS FOR AIR/HYDRAULIC SYSTEM CIRCUIT DIAGRAMS (TANKS AND ACCUMULATORS)	10
GRAPHIC SYMBOLS FOR AIR/HYDRAULIC SYSTEM CIRCUIT DIAGRAMS (CONVERTERS, CYLINDERS AND CALIPERS)	11
GRAPHIC SYMBOLS FOR AIR/HYDRAULIC SYSTEM CIRCUIT DIAGRAMS (CALIPERS AND CYLINDERS)	12
GRAPHIC SYMBOLS FOR AIR/HYDRAULIC SYSTEM CIRCUIT DIAGRAMS (SEMI-COUPLINGS AND COUPLING HEADS)	13
GRAPHIC SYMBOLS FOR AIR/HYDRAULIC SYSTEM CIRCUIT DIAGRAMS (INDICATORS AND SWITCHES)	15
GRAPHIC SYMBOLS FOR AIR/HYDRAULIC SYSTEM CIRCUIT DIAGRAMS (BRAKES) . . .	16
PIPES AND COUPLINGS	17
❑ General	17
❑ Re-flanging rigid pipes	17
❑ Bending rigid pipes	18
❑ Cutting rigid pipes	18
❑ Replacing flexible hoses with threaded couplings	19
❑ Replacing flexible hoses with quick release couplings	20
BRAKING SYSTEM	22
❑ Outline diagram for vehicles 29L - 35S	22
❑ Outline diagram for vehicles 35C - 40C - 45C - 50C - 60C - 65C	23
❑ Outline diagram for vehicles 29L - 35S with ABS - ABD - EBD	24
❑ Outline diagram for vehicles 35C - 40C - 45C - 50C - 60C - 65C with ABS - ABD - EBD	25
❑ Braking system main components layout	26

Page

❑ Location of the main brake system components on vehicles with ABS - ABD - EBD 28

DESCRIPTION 30

❑ Service brake 30

❑ Emergency brake 30

❑ Parking brake 30

BRAKES 30

❑ Front and Rear disc brakes 30

DIAGNOSTICS 31

TIGHTENING TORQUES 38

TOOLS 40

SPECIFICATIONS AND DATA - HYDRAULIC SYSTEM 43

SPECIFICATIONS AND DATA - BRAKES 44

CHECKS 46

❑ Functional check of vacuum brake system 46

BRAKING SYSTEM MAIN COMPONENTS 47

❑ Vacuum pump 47

❑ Vacuum servo brake 47

❑ Bleeding air from the hydraulic circuit 48

❑ Bleeding air from the hydraulic circuit with de-aerator device 48

❑ Mechanically controlled load sensing valve (vehicles 35C - 40C - 45C - 50C - 60C - 65C) 49

❑ Regulation of load proportioning valve on vehicle 49

❑ Dual mechanically controlled load sensing valve (vehicles 29L - 35S) 50

❑ Adjusting the load sensing valve 50

Page

ANTI-SKID DEVICES 51

❑ Antilock braking system (ABS) 51

❑ Electronic braking distribution device (EBD) . . 51

❑ Anti-skid braking device (ABD) 51

❑ Electro-hydraulic control unit/modulator 51

❑ Rev sensor 51

❑ Phonic wheels 51

BRAKE REPAIRS 52

❑ Front brakes 52

❑ Replacing brake linings 52

❑ Brake caliper removal and refitting 53

REAR BRAKES 54

❑ Replacing brake linings 54

❑ Brake caliper removal and refitting 56

OVERHAUL OF BRAKE CALIPERS 56

❑ 2x42 - 2x44 - 2x46 - 2x52 Brembo brake calipers 56

❑ 1x52 Brembo brake calipers 57

OVERHAULING BRAKE DISCS 58

MACHINING AND GRINDING OF DISC BRAKES 58

WHEEL NUT TIGHTENING SEQUENCE 59

OVERHAULING PARKING BRAKE 59

❑ Assembly 61

❑ Adjusting parking brake 61

GRAPHIC SYMBOLS FOR AIR/HYDRAULIC SYSTEM CIRCUIT DIAGRAMS (MISCELLANEOUS AND GENERATORS)

DESCRIPTION	SYMBOL	
HYDRAULIC FLOW		
AIR FLOW		
ELECTRICAL LINE		
ABLE TO ROTATE		
CROSSOVER OF CONNECTED LINES		
PRESSURE TEST POINT		
QUICK-RELEASE COUPLING		
COCK		
COCK WITH OUTLET		
SILENCER	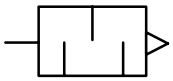	
COMPRESSOR	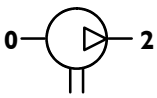	
ENERGY SAVING COMPRESSOR	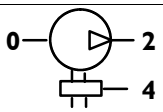	
VACUUM PUMP	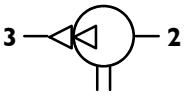	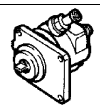
HYDRAULIC PUMP	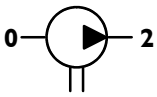	
HYDRAULIC HAND PUMP	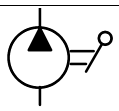	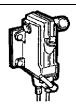

32780

GRAPHIC SYMBOLS FOR AIR/HYDRAULIC SYSTEM CIRCUIT DIAGRAMS (VALVES)

DESCRIPTION	SYMBOL	
CONDENSATE SEPARATOR		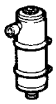
FILTER	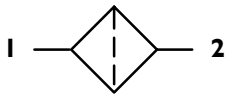	
DEHUMIDIFIER	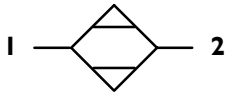	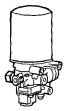
DEHUMIDIFIER	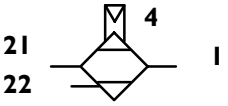	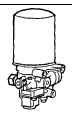
DEHUMIDIFIER WITH BUILT-IN REGULATOR	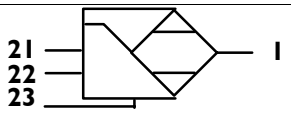	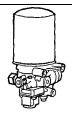
AUTOMATIC CONDENSATION DRAIN VALVE		
CONTROLLED CONDENSATION DRAIN VALVE	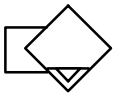	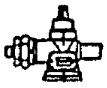
HAND CONDENSATE DRAIN VALVE		
CONTROLLED ANTI-ICING UNIT	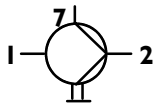	
AUTOMATIC ANTI-ICING UNIT	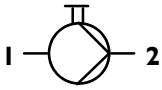	
PRESSURE REGULATOR WITH INDEPENDENT CIRCUIT	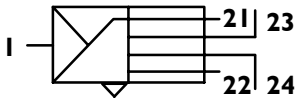	
PRESSURE CONTROLLER	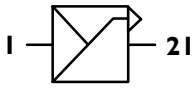	
PRESSURE CONTROLLER	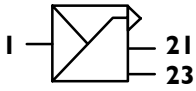	
PRESSURE CONTROLLER (GOVERNOR)	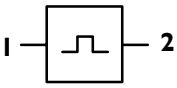	
PRESSURE LIMITING VALVE	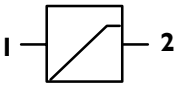	

32782 32783

GRAPHIC SYMBOLS FOR AIR/HYDRAULIC SYSTEM CIRCUIT DIAGRAMS (VALVES)

DESCRIPTION	SYMBOL	
PROPORTIONAL REDUCING VALVE	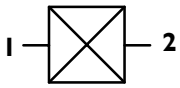	
MATCHING VALVE	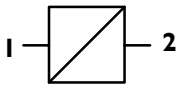	
FOUR CIRCUIT PROTECTION VALVE	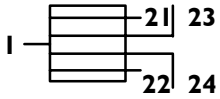	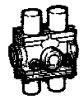
THREE CIRCUIT PROTECTION VALVE	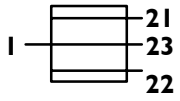	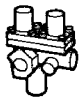
TWO CIRCUIT PROTECTION VALVE	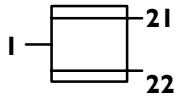	
NON-RETURN AIR INLET VALVE	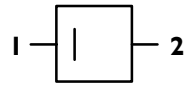	
NON-RETURN AIR INLET VALVE	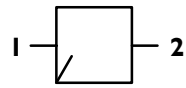	
SAFETY VALVE	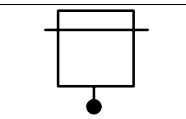	
CHECK VALVE	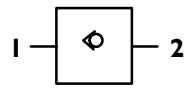	
CHECK VALVE	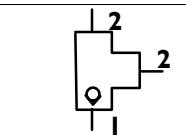	
DOUBLE SHUT-OFF VALVE	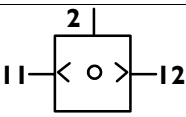	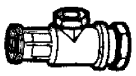
DIFFERENTIAL DOUBLE SHUT-OFF VALVE	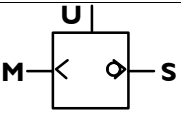	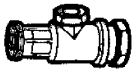
THROTTLE VALVE WITH QUICK RETURN		
THROTTLE VALVE	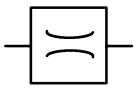	
CONTROL VALVE	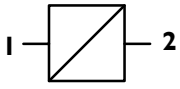	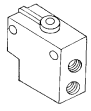

32783 32784 32785

GRAPHIC SYMBOLS FOR AIR/HYDRAULIC SYSTEM CIRCUIT DIAGRAMS (VALVES)

DESCRIPTION	SYMBOL	
DUMP VALVE	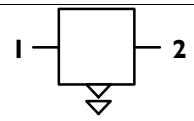	
BRAKE CONTROL VALVE	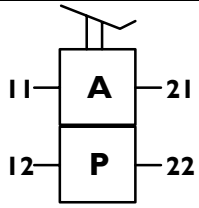	
BRAKE CONTROL VALVE	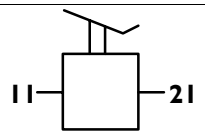	
BRAKE CONTROL VALVE	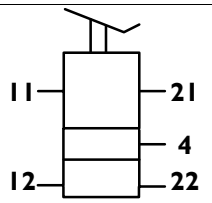	
PARKING BRAKE CONTROL VALVE	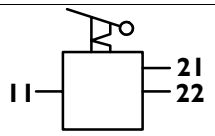	
PARKING BRAKE CONTROL VALVE	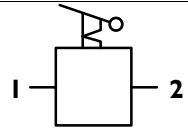	
BRAKE VALVE	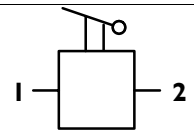	
CONTROL VALVE	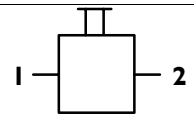	
CONTROL VALVE	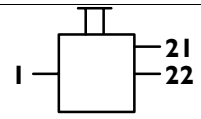	
RETARDER CONTROL VALVE	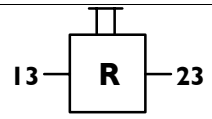	
SERVO CONTROL VALVE	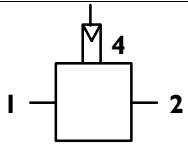	

32786

GRAPHIC SYMBOLS FOR AIR/HYDRAULIC SYSTEM CIRCUIT DIAGRAMS (VALVES)

DESCRIPTION	SYMBOL	
SERVO CONTROL VALVE	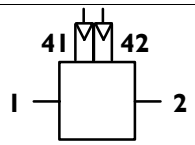	
SERVO CONTROL VALVE FOR SINGLE LINE	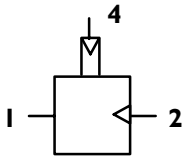	
TRAILER BREAKING TRIPLE CONTROL VALVE	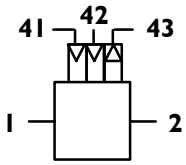	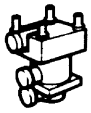
TRAILER BREAKING TRIPLE CONTROL VALVE WITH BUILT-IN SERVO SWITCHING	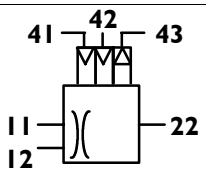	
LOAD PROPORTIONING VALVE	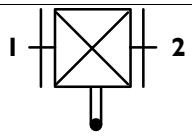	
DUAL LOAD PROPORTIONING VALVE	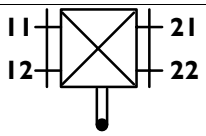	
LOAD PROPORTIONING VALVE WITH BY-PASS	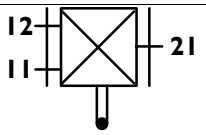	
LOAD PROPORTIONING VALVE WITH BUILT-IN RELAY	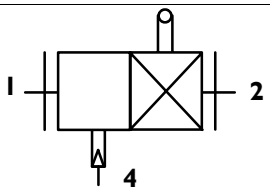	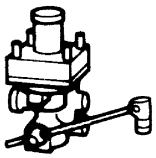
LOAD PROPORTIONING VALVE WITH BUILT-IN RELAY WITH AIR CONTROL	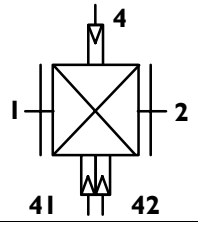	

32786 32787

GRAPHIC SYMBOLS FOR AIR/HYDRAULIC SYSTEM CIRCUIT DIAGRAMS (VALVES)

DESCRIPTION	SYMBOL	
LOAD PROPORTIONING VALVE WITH AIR CONTROL	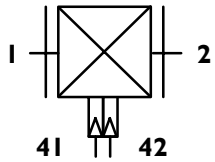	
LOAD PROPORTIONING VALVE WITH AIR CONTROL	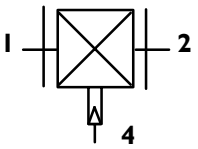	
PROPORTIONAL REDUCING VALVE	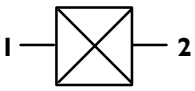	
SLAVED PROPORTIONAL REDUCING VALVE	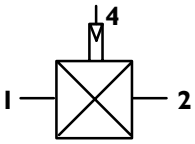	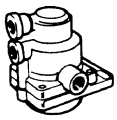
SLAVED LIMITING VALVE	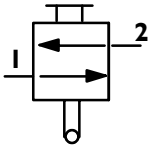	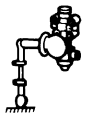
LEVELLING VALVE	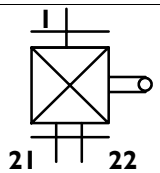	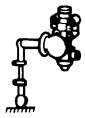
LEVELLING VALVE	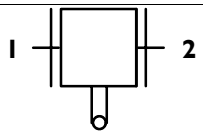	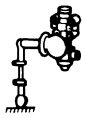
HAND OPERATED SUSPENSION RAISING CONTROL VALVE	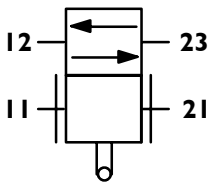	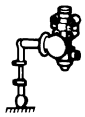
LEVELLING VALVE WITH BUILT-IN TRAVEL LIMITER	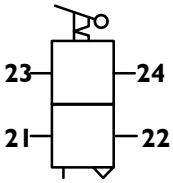	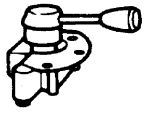

32787 32788

GRAPHIC SYMBOLS FOR AIR/HYDRAULIC SYSTEM CIRCUIT DIAGRAMS (VALVES)

DESCRIPTION	SYMBOL	
PROPORTIONAL CONTROL VALVE	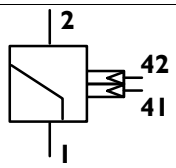	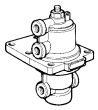
HAND OPERATED SUSPENSION CONTROL VALVE WITH ELECTRICAL MONITORING	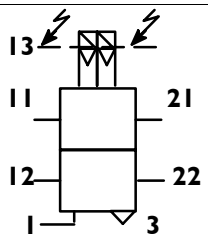	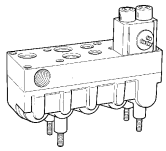
ELECTROPNEUMATIC VALVE	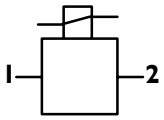	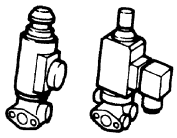
ELECTROPNEUMATIC VALVE	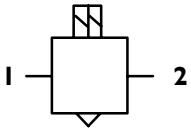	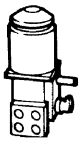
ELECTROPNEUMATIC VALVE	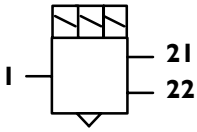	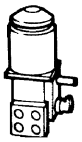
HYDRAULIC MODULATOR FOR ABS	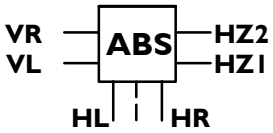	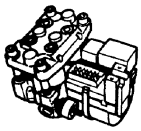
AUGMENTER VALVE	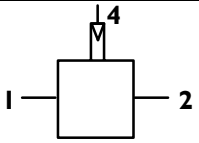	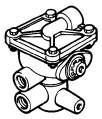

32788

GRAPHIC SYMBOLS FOR AIR/HYDRAULIC SYSTEM CIRCUIT DIAGRAMS (TANKS AND ACCUMULATORS)

DESCRIPTION	SYMBOL	
COMPRESSED AIR TANK	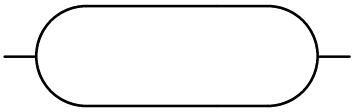	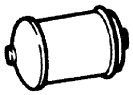
BRAKE FLUID RESERVOIR	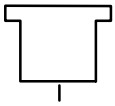	
AIR SPRING	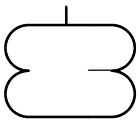	

32789

GRAPHIC SYMBOLS FOR AIR/HYDRAULIC SYSTEM CIRCUIT DIAGRAMS (CONVERTERS, CYLINDERS AND CALIPERS)

DESCRIPTION	SYMBOL	
VACUUM SERVO BRAKE	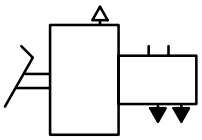	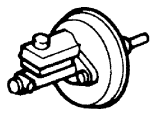
VACUUM SERVO BRAKE	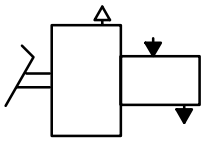	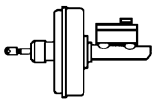
DUAL CIRCUIT MASTER CYLINDER	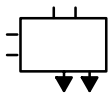	
SINGLE CIRCUIT MASTER CYLINDER	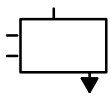	
AIR/HYDRAULIC CONVERTER	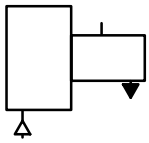	
AIR/HYDRAULIC CONVERTER	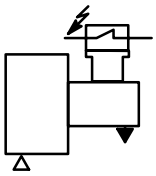	
HYDRAULIC BRAKE CYLINDER	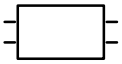	
SLAVE CYLINDER		
BRAKE CYLINDER	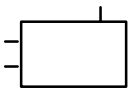	
SPRING CYLINDER	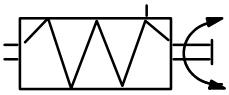	
COMBINED BRAKE CYLINDER	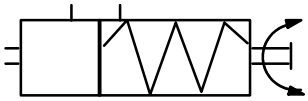	
FIXED DISK BRAKE CALIPER	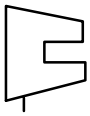	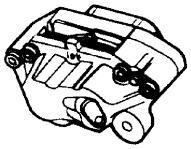

32790 32791

GRAPHIC SYMBOLS FOR AIR/HYDRAULIC SYSTEM CIRCUIT DIAGRAMS (CALIPERS AND CYLINDERS)

DESCRIPTION	SYMBOL	
FLOATING DISK BRAKE CALIPER	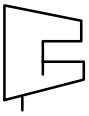	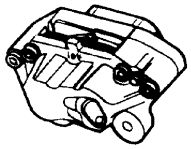
FLOATING DISK BRAKE CALIPER WITH PARKING		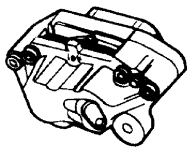
MECHANICAL FLOATING DISK BRAKE CALIPER		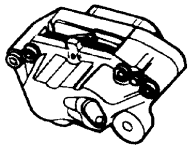
SERVO CLUTCH	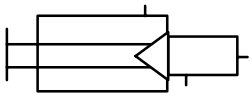	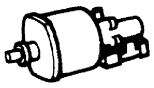
SERVO CLUTCH	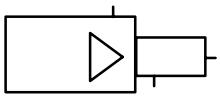	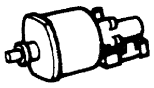

32791

GRAPHIC SYMBOLS FOR AIR/HYDRAULIC SYSTEM CIRCUIT DIAGRAMS (SEMI-COUPLINGS AND COUPLING HEADS)

DESCRIPTION	SYMBOL	
"ISO" SEMICOUPLING	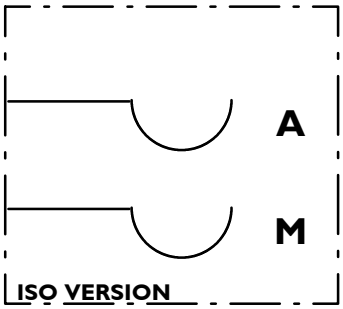	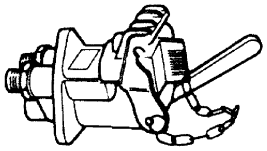
"ISO" SEMICOUPLING	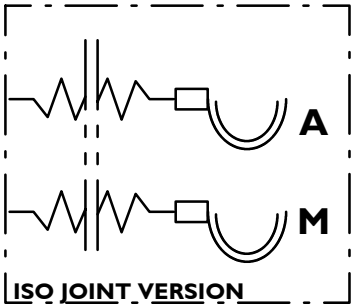	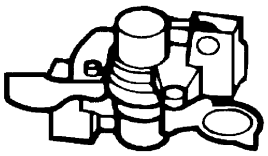
"CUNA" SEMICOUPLING	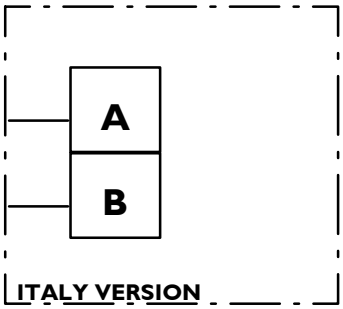	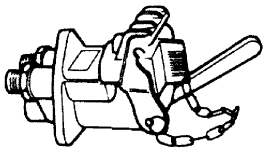
"CUNA" SEMICOUPLING	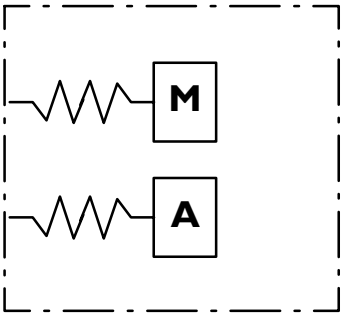	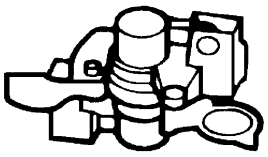
"NATO" SEMICOUPLING	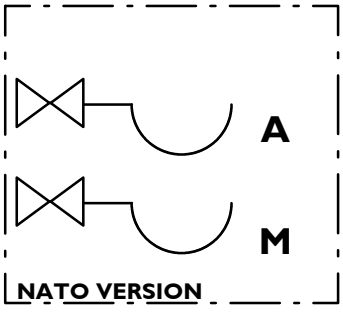	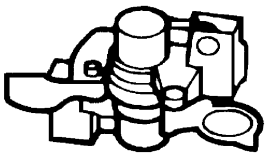

32792 32793

GRAPHIC SYMBOLS FOR AIR/HYDRAULIC SYSTEM CIRCUIT DIAGRAMS (SEMI-COUPLINGS AND COUPLING HEADS)

DESCRIPTION	SYMBOL	
SEMI-COUPLING	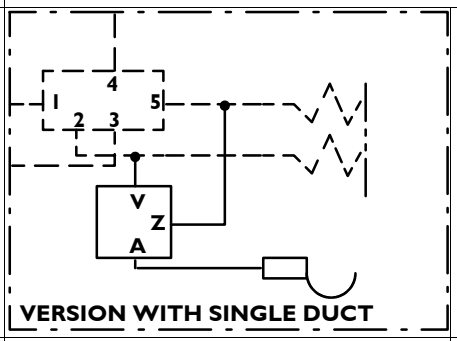	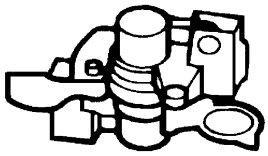
SEMI-COUPLING	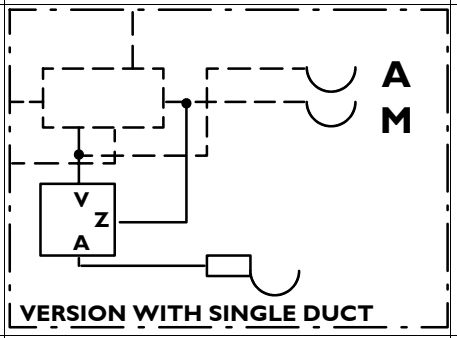	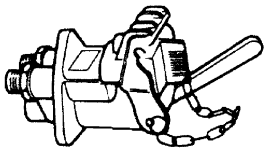
SEMI-COUPLING	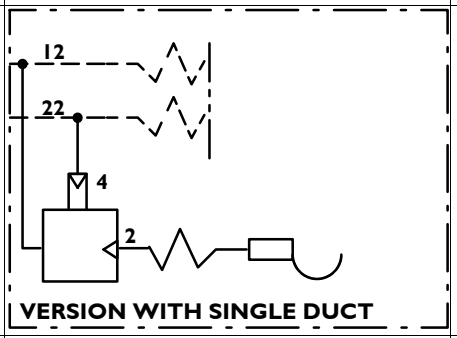	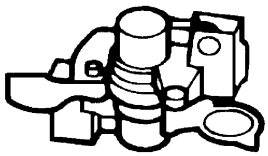
SEMI-COUPLING	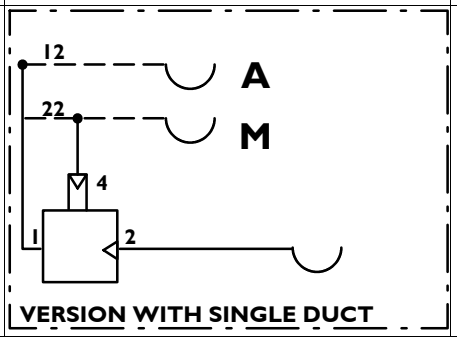	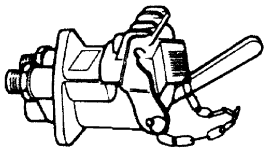

32793

GRAPHIC SYMBOLS FOR AIR/HYDRAULIC SYSTEM CIRCUIT DIAGRAMS (INDICATORS AND SWITCHES)

DESCRIPTION	SYMBOL	
PRESSURE GAUGE		
PRESSURE GAUGE		
PRESSURE TRANSMITTER	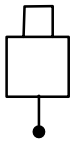	
LAMP		
MECHANICAL OPERATED SWITCH	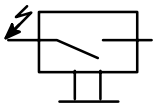	
PRESSURE SWITCH	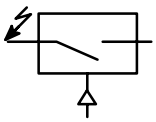	
LOW PRESSURE SWITCH	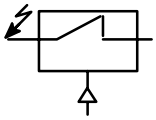	
AUDIBLE WARNING		
SENSOR		

32794

GRAPHIC SYMBOLS FOR AIR/HYDRAULIC SYSTEM CIRCUIT DIAGRAMS (BRAKES)

DESCRIPTION	SYMBOL	
SINGLE CYLINDER HYDRAULIC BRAKE	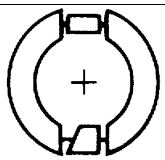	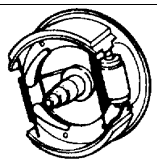
TWIN CYLINDER HYDRAULIC BRAKE	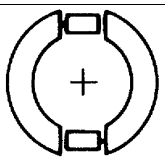	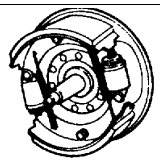
DUAL SERVO HYDRAULIC BRAKE	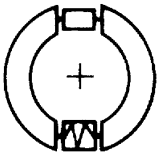	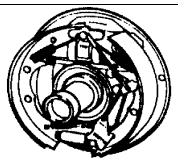
DUAL SERVO HYDRAULIC BRAKE WITH PARKING BRAKE	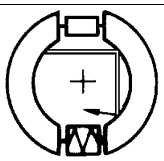	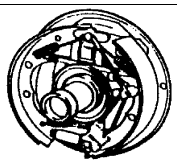
SINGLE CAM OPERATED BRAKE	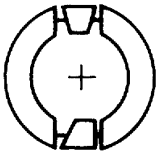	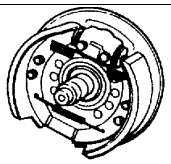
TWIN DUAL CAM OPERATED BRAKE	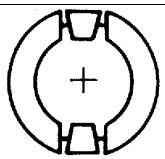	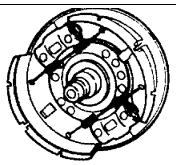

32795

799512 PIPES AND COUPLINGS

General

The pipes in the braking systems of commercial vehicles are currently of two types:

- flexible nylon hose with single or two-ply structure and in the following diameters 6-8-10-12-16 mm supplied as spares in metre lengths;
- rigid metal pipes of the following diameters: 4.75-6.35-8-10-12 mm. Pipes from ∅ 4.75 to ∅ 10 mm are supplied as spares in straight lengths of 4, 5 and 6 m, while those which are over 10 mm diam. are supplied as spares ready cut, bent and flared.

Re-flanging rigid pipes

Figure 1

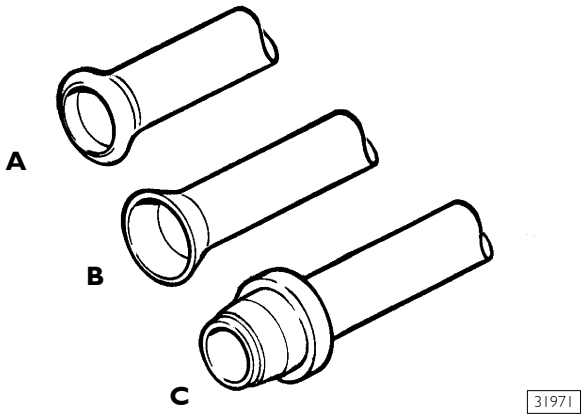

TYPES OF RE-FLANGING OF RIGID PIPES

A type re-flanging

Figure 2

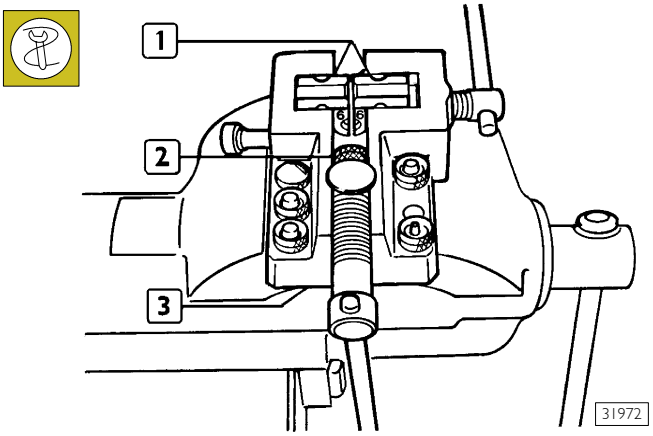

Position of press 99386523 (3) the blocks (1) so that the stamped numbers indicating the diameter of the pipes to be worked are facing towards the due (2). The choice of the matrix die (2) depends on the diameter of the pipe to be re-flanged. Additionally, the diameter of the pipe that can be re-flanged is stamped on the matrix die.

Figure 3

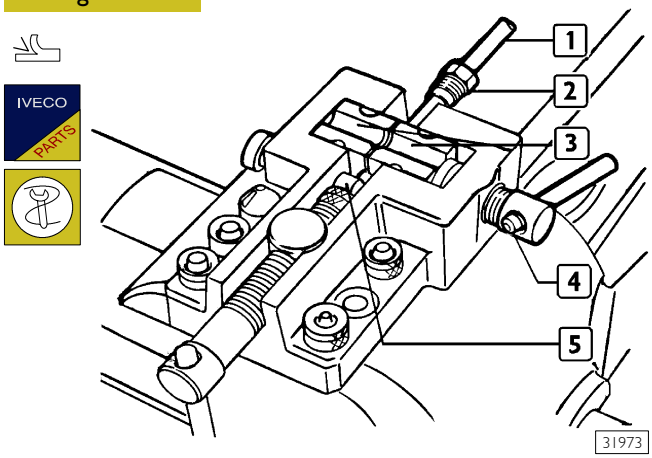

Deburr pipe (1), insert union fitting (2) on this and position it between blocks (3) bearing against pin (5). Lock pipe (1) with screw (4).

Figure 4

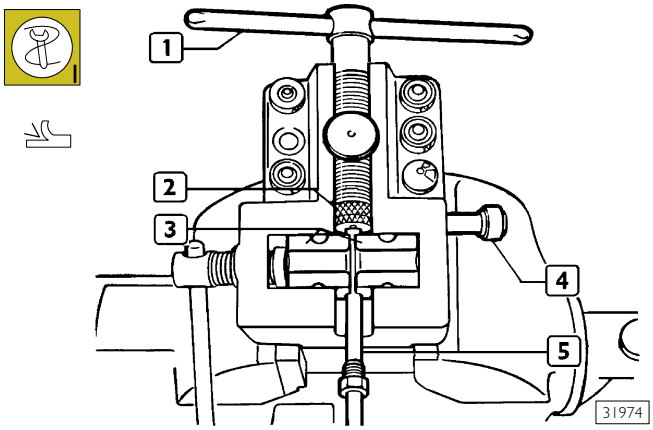

Move pin (4) to neutral position. Tighten screw (1) until matrix die (2) comes up against blocks (3), thus forming the end of the pipe (5).

B type re-flanging

Figure 5

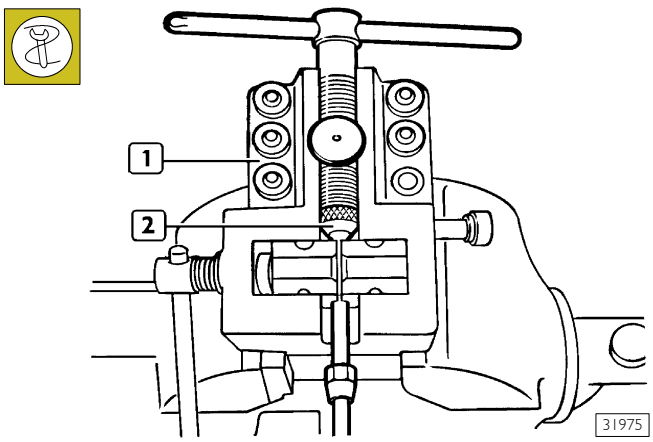

Fix matrix die (2) to press 99386523 (1).
For re-flanging follow the instructions given above for A type re-flanging.

C type re-flanging

Figure 6

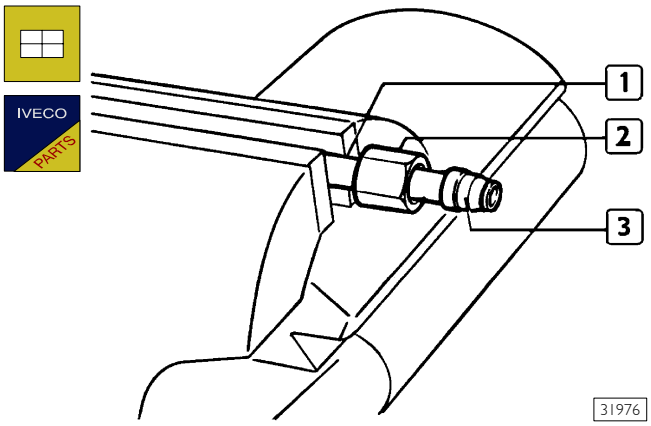

Fit nut (2) and ring (3) over the pipe (1).

Figure 7

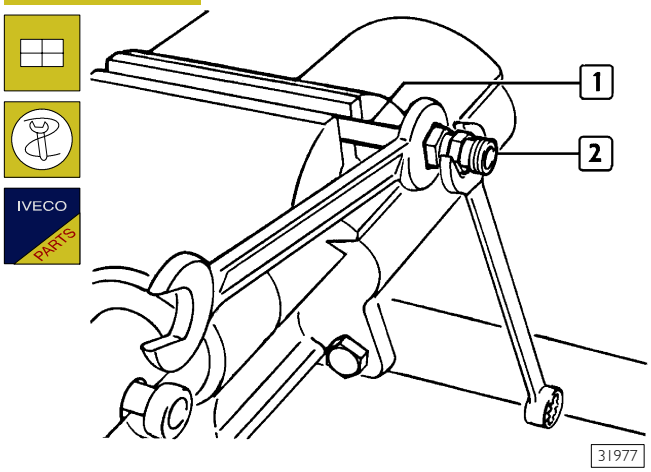

Fit union fitting (2) and tighten so that ring (3, Figure 6) is locked over the pipe (1).

Bending rigid pipes

Figure 8

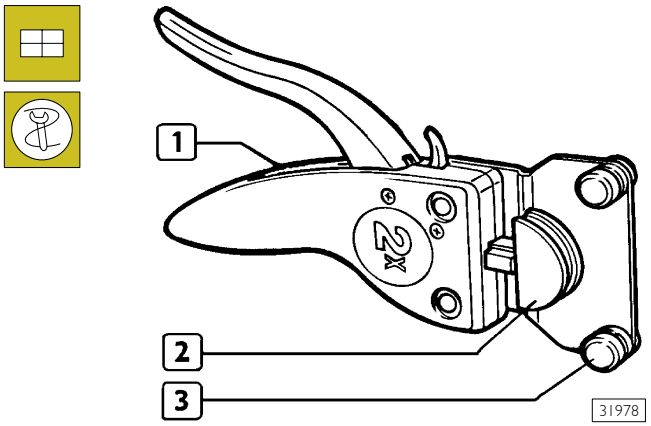

Fit tool (1) 99386523 and select components (2) and (3) according to the diameter of the pipe to be bent.

Figure 9

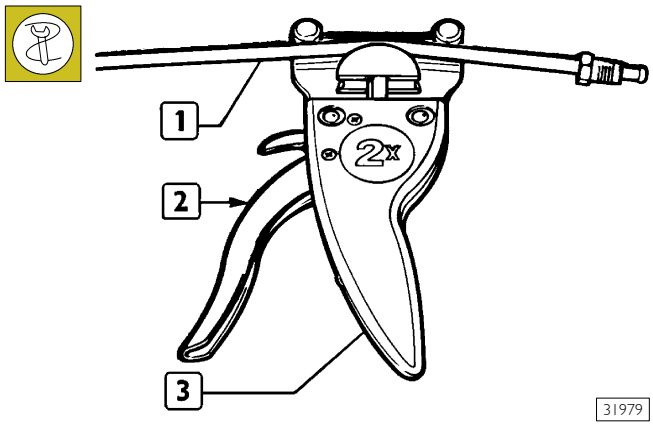

Position pipe (1) in tool (3) and bend the pipe by acting on lever (2).

Figure 10

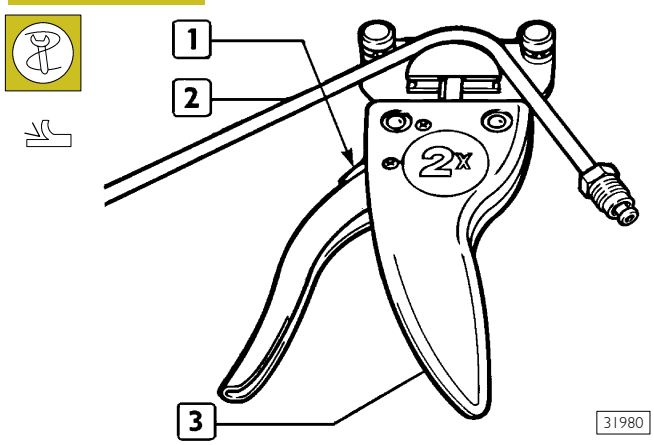

To remove the pipe (2) from the tool (3) use lever (1).

Cutting rigid pipes

Figure 11

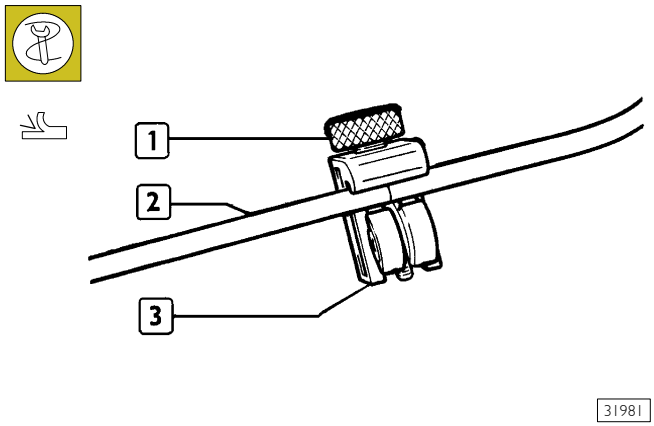

Position pipe (2) in tool (3) 99386523 and tighten screw (1). By holding the pipe (2) still, rotate the tool (3) until the pipe has been completely cut.

After having cut the pipe, deburr and shape the ends as described previously.

By turning tool (3) around the pipe (2), screw (1) becomes loose. To completely cut the pipe, you must tighten the screw (1) as soon as it becomes loose.

Replacing flexible hoses with threaded couplings

Carefully follow the instructions below:

Figure 12

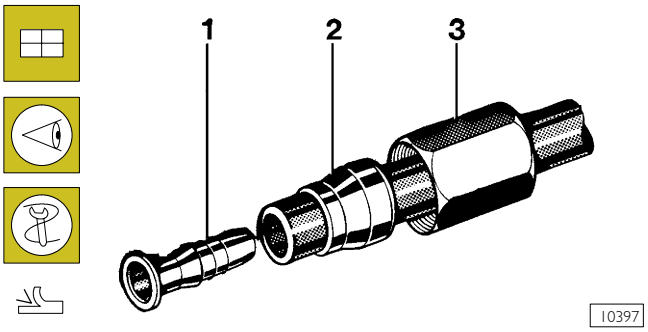

- ❑ only use type approved hoses;
- ❑ check the condition of the new hose, that must be free from cracks, cuts or scores;
- ❑ cut the hose at 90°, with respect the to axis, to the required length by means of pipe-cutter pliers 99387050;

Fit the following in the specified order over the hose:

- ❑ nut (3), pressure ring (2) (the thickest part should be facing the nut (3)) and the reinforcement bush (1);
- ❑ the bush must be in perfect condition (it must be free from deformation or hammer dents).

Figure 13

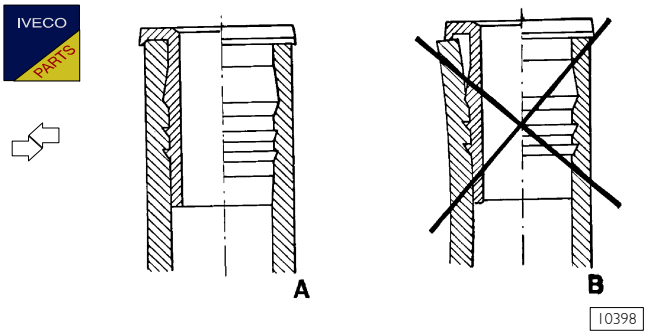

ASSEMBLY OF REINFORCEMENT BUSH
A = CORRECT ASSEMBLY
B = INCORRECT ASSEMBLY

- ❑ Fit the reinforcement bush with tool 99372219 ensuring contact between its flange and end of the hose.
- ❑ Make sure that the end of the hose penetrates into the rake throat of the flange.
- ❑ Re-flange the support ring when fitted on the vehicle or at the test bench on a union fitting.
- ❑ The pressure and the final distance of the pressure ring front edge from the reinforcement bush should be in accordance with those shown in the table below.

When the hose is incorrectly fitted, do not reuse the hose once the bush and support ring have been removed.

	Hose mm	Distance between bush edge and ring edge mm (*)	Fitting pressure (N/mm^2)
Twin-layer	6 x 1	da 1 a 1.5	0.040
	8 x 1	da 2 a 2.5	0.050
Single layer	10 x 1.5	da 2 a 2.5	0.050
	12 x 1.6	da 2 a 2.5	0.060
	16 x 2.34	da 3 a 3.5	0.060

(*) See reference h, Figure 14.

Figure 14

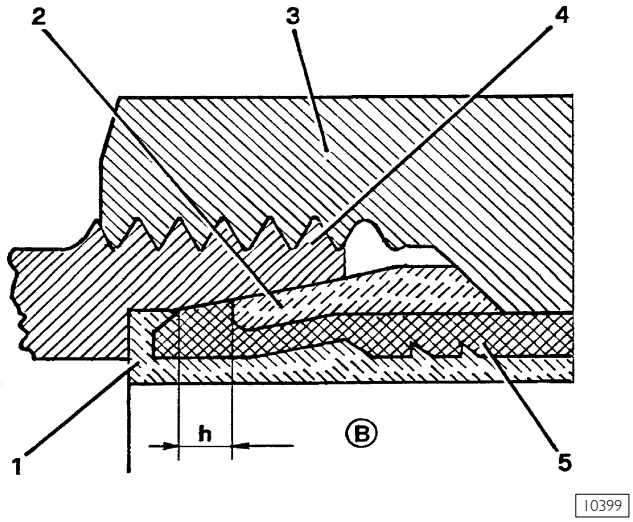

1. Reinforcement bush - 2. Pressure ring - 3. Nut - 4. Union fitting - 5. Hose - h. Distance between bush edge and ring edge (see table)

Introduce the end of the prepared hose into the union fitting until the reinforcement bush flange rests in the appropriate seat:

- ❑ to lock the nut on the union fitting, tighten this up by hand and then by means of a box wrench and dynamometric wrench; this must tightened up to the required driving torque.

When fitting the hose to the vehicle, some important points should be borne in mind:

- ❑ bends must comply with minimum radii, so as to avoid constrictions;

Diameter of pipe mm	Minimum radius of curvature mm
6 x 1	~ 40
8 x 1	~ 50
10 x 1.5	~ 60
12 x 1.6	~ 75
16 x 2.34	~ 100

Make sure that the hoses are not in contact with sharp edges or with sharp metal parts or sources of heat, but are at a minimum safe distance of 15mm from these.

- ❑ when hoses run through chassis members or metal parts, make sure that the holes through which they pass are fitted with rubber grommets, and that these are in good condition;
- ❑ avoid sliding the hose along sharp edges which might cause cuts;
- ❑ when the hose has to be attached to existing pipe work, take into account of the additional heat to which it may be subjected (power steering pipe work). In this case the hose must be protected with shields;
- ❑ when the hose has been connected, check that it is not under tension between the attachment points, instead leaving it slightly slack to take up the more substantial variations in temperature, especially for short lengths;
- ❑ before fitting, thoroughly clean the hoses by blowing compressed air through them to safeguard operation of the system.

Figure 15

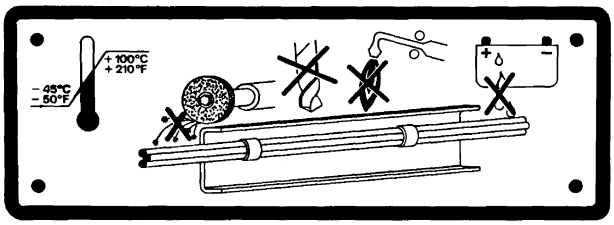

13132

- ❑ Protect the hoses if grinding or welding operations are carried out on the vehicle; a notice is fitted in the cabin indicating the precautions to be observed to avoid damage.

For greater safety and convenience in working, it is advisable to remove the hoses during these operations.

When fitting is finished, check that all seals (unions, couplings, etc.) are completely free from leaks.

Replacing flexible hoses with quick release couplings

Swivel couplings:

Figure 16

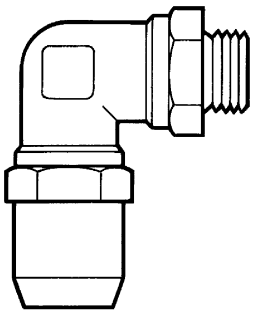

39306

screw the coupling into the threaded seating provided on the air valve, and tighten it to the driving torque indicated in the table.

Banjo couplings:

Figure 17

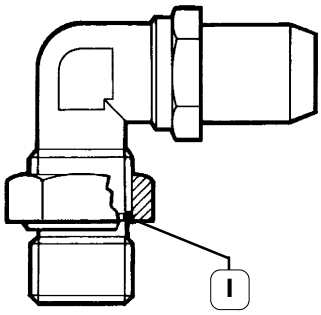

39307

- ❑ check that the seal ring (1) is in its seal;
- ❑ tighten the coupling until the seal gasket is in contact with the valve;
- ❑ direct the valve correctly and, by keeping the moveable part still, lock the hexagonal nut to the driving torque indicated in the table.

Swivel and banjo couplings:

COUPLING THREAD	DRIVING TORQUE (Nm + 10%)
M 10 x 1.0 mm	22
M 12 x 1.5 mm	24
M 14 x 1.5 mm	28
M 16 x 1.5 mm	35
M 22 x 1.5 mm	40

Figure 18

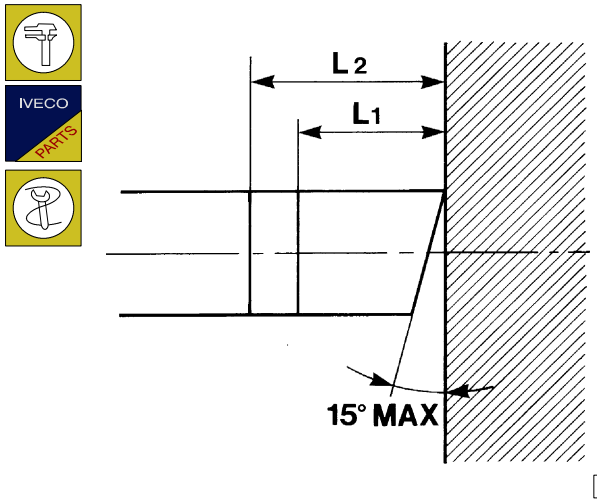

33977

- ❑ only use type approved hoses;
- ❑ check the condition of the new hose, that must be free from cracks, cuts or scores;
- ❑ cut the hose at 90°, maximum error 15°, with reference to the axis. Use pipe-cutter pliers 99387050 to cut to the required length;

Figure 19

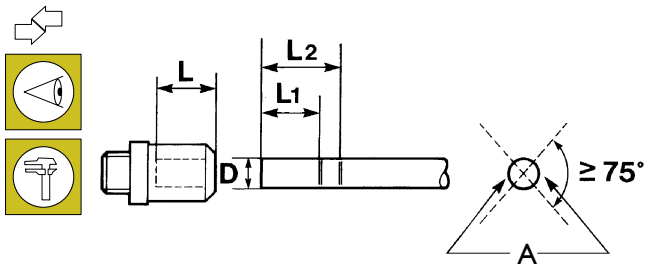

33976

A = Mark to identify end of tube travel

- ❑ use indelible ink to clearly mark two reference notches on both diametrically opposite faces of the pipe at an angle of ≥ 75°, set to distances L_1 and L_2, to ensure correct fitting in place.

L_1 and L_2 vary according to the diameter of the hose and are to be measured at the longer part of the hose (see Figure 18).

D (mm)	$L\ ^{0}_{+0,5}$ (mm)	$L_1\ ^{-0,5}_{+1}$ (mm)	$L_2\ ^{-0,5}_{+1}$ (mm)
6	19.8	17	22
8	20.5	18	23
12	25	22	28
16	27.1	24	30

Figure 20

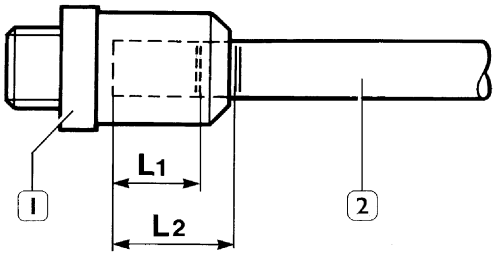

39308

- ❑ Insert the hose (2) by hand into the coupling (1), with a force between 30 and 120 N according to the diameter of the hose, so that reference mark L_1 is inside the hose while mark L_2 remains visible.

Figure 21

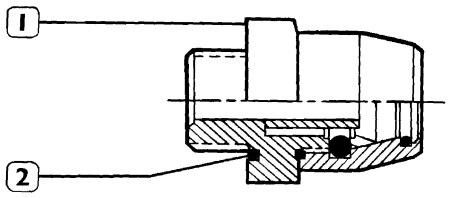

33978

When removing couplings (1) on pneumatic components, check the condition of the seal ring (2) and, if necessary, replace.

COUPLING THREAD	SEAL RING DIMENSIONS
M 10 x 1.0	10.1 x 1.6
M 12 x 1.5	11.0 x 2.0
M 14 x 1.5	-
M 16 x 1.5	15.0 x 2.0
M 22 x 1.5	-

Whenever a hose is removed from a quick release coupling, the coupling itself must be replaced. Spare quick release couplings are supplied complete.

Quick release and threaded couplings are not interchangeable. This also applies to flexible hoses used with quick release couplings and flexible hoses used with threaded couplings.

BRAKING SYSTEM
Outline diagram for vehicles 29L - 35S

Figure 22

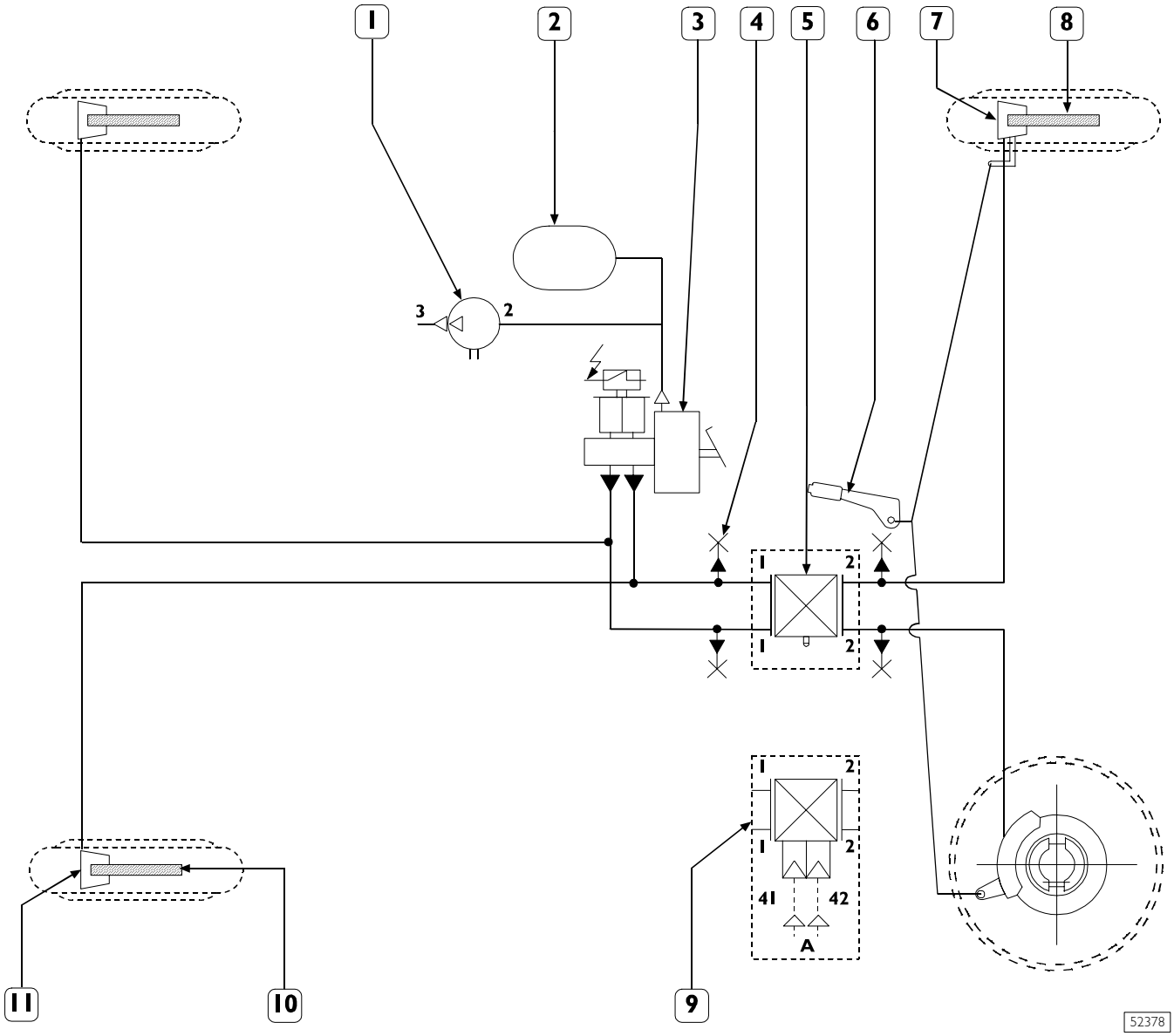

1. Pressure reducer - 2. Vacuum tank (2 litres) - 3. Servo brake - 4. Hydraulic pressure test point - 5. Dual mechanical operated load proportioning valve (for vehicles with mechanical suspensions) - 6. Parking brake lever - 7. Rear brake caliper - 8. Rear brake disc - 9. Dual pneumatic operated load proportioning valve (for vehicles with pneumatic suspensions) - 10. Front brake disc - 11. Front brake caliper - A. From pneumatic suspension circuit.

Outline diagram for vehicles 35C - 40C - 45C - 50C - 60C - 65C

Figure 23

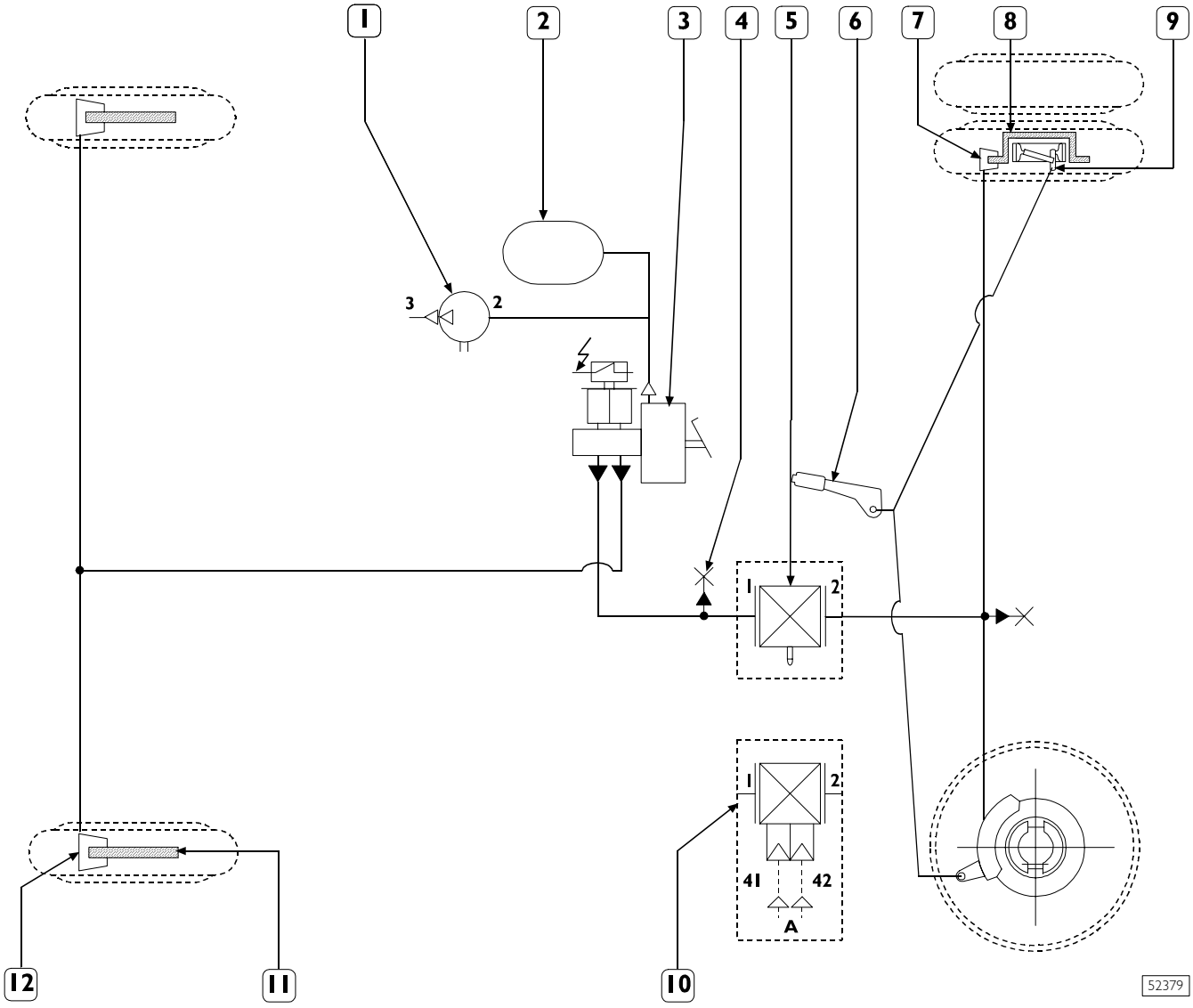

1. Pressure reducer - 2. Vacuum tank (2 litres for 35C, 40C vehicles, 5 litres for 45C / 50C / 60C / 65C vehicles) - 3. Servo brake - 4. Hydraulic pressure test point - 5. Dual mechanical operated load proportioning valve (for vehicles with mechanical suspensions) - 6. Parking brake lever - 7. Rear brake caliper - 8. Rear brake disc - 9. Parking drum brake - 10. Dual pneumatic operated load proportioning valve (for vehicles with pneumatic suspensions) - 11. Front disc brake - 12. Front brake caliper - A. From the pneumatic suspension circuit.

Outline diagram for vehicles 29L - 35S with ABS - ABD - EBD

Figure 24

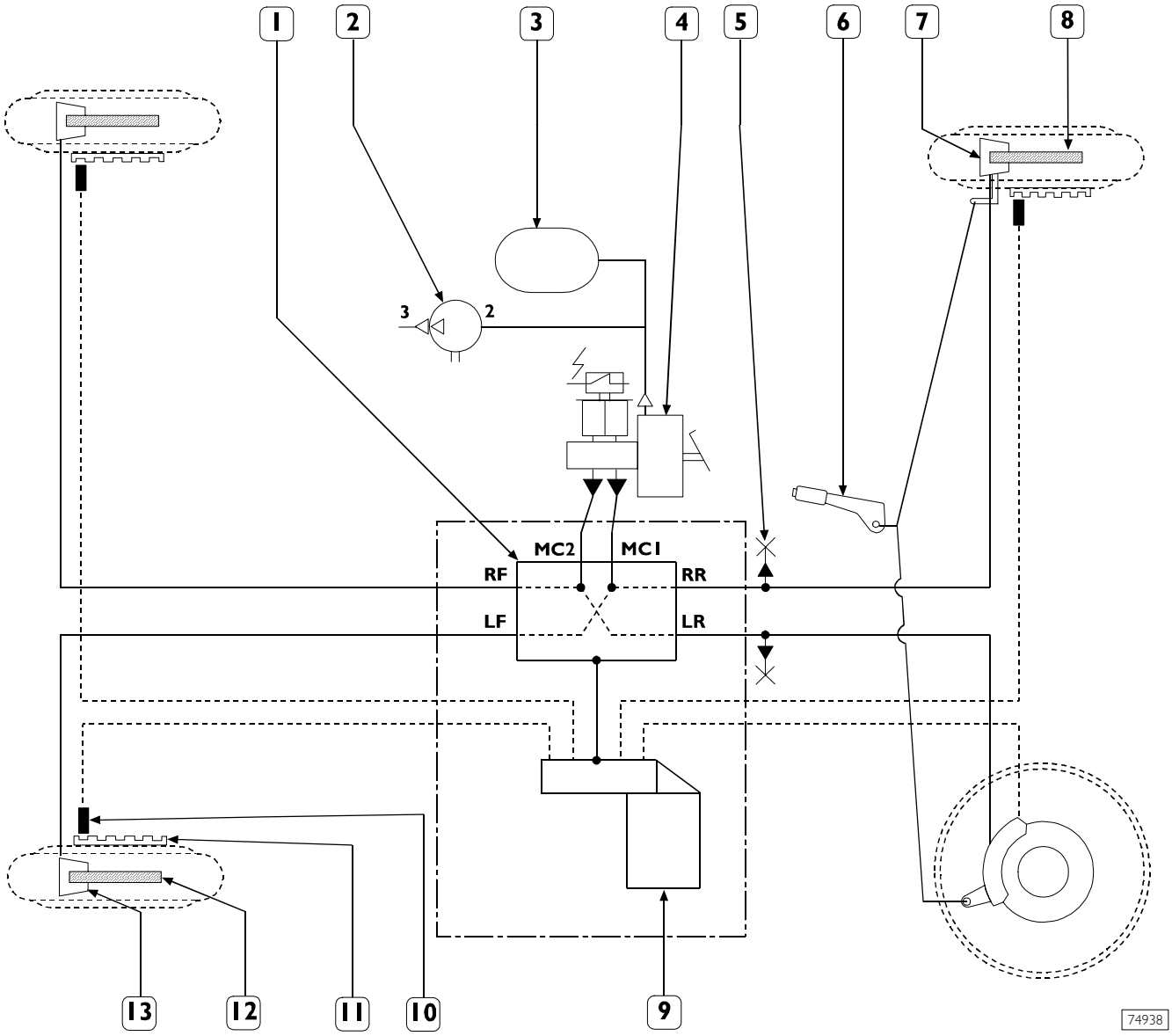

1. Electro-hydraulic modulator - 2. Vacuum pump - 3. Vacuum tank - 4. Servo brake - 5. Hydraulic pressure test point - 6. Parking brake lever - 7. Rear brake caliper - 8. Rear brake disc - 9. Electronic control unit - 10. Wheel revolutions sensor - 11. Phonic wheel - 12. Front brake disc - 13. Front brake caliper.

Outline diagram for vehicles 35C - 40C - 45C - 50C - 60C - 65C with ABS - ABD - EBD

Figure 25

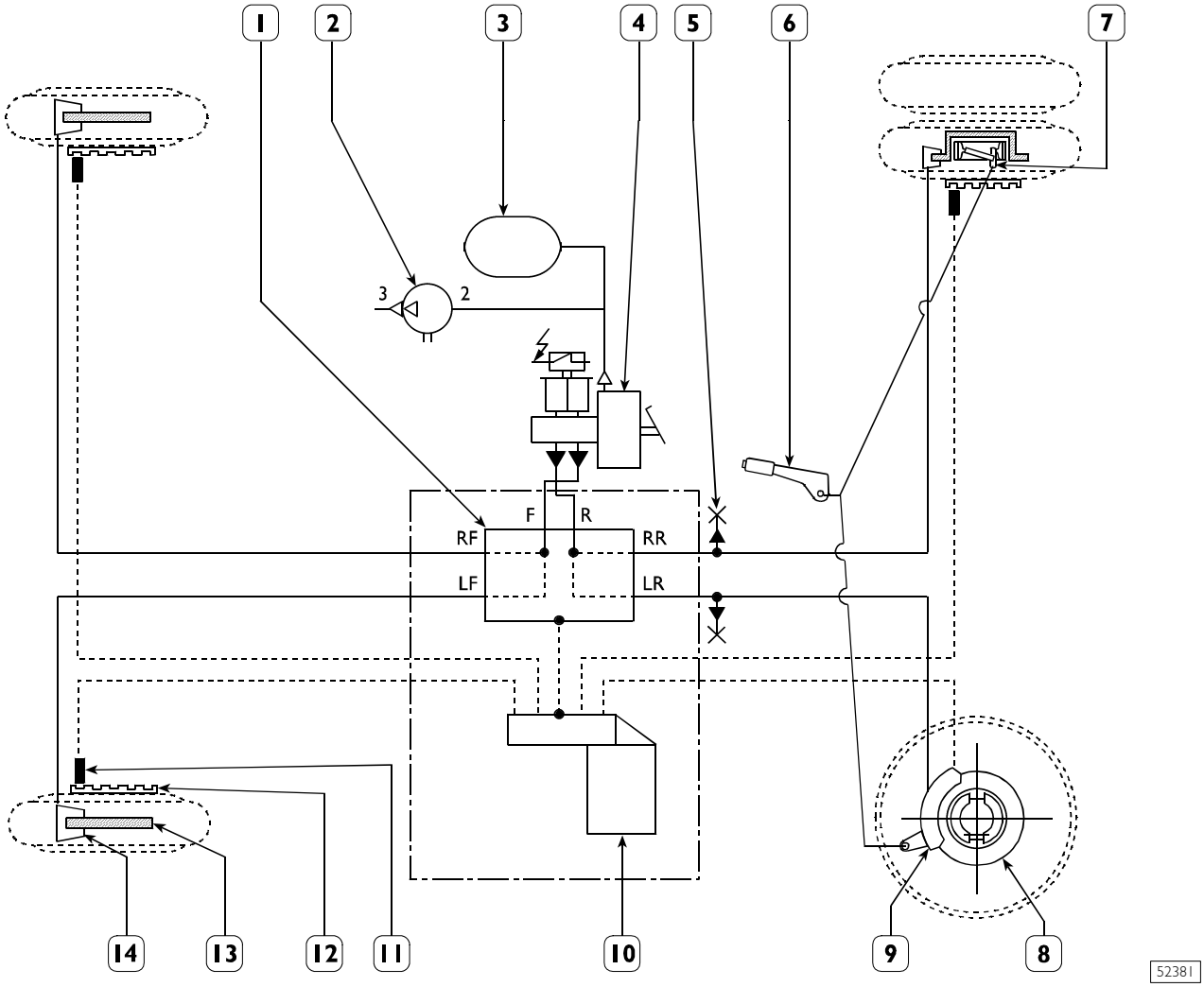

1 Electro-hydraulic modulator - 2. Vacuum pump - 3. Vacuum tank - 4. Servo brake - 5. Hydraulic pressure test point - 6. Parking brake lever - 7. Parking drum brake - 8. Rear brake disc - 9. Rear brake caliper - 10. Electronic control unit - 11. Wheel revolutions sensor - 12. Phonic wheel - 13. Front brake disc - 14. Front brake caliper.

Braking system main components layout

Vehicles 29L - 35S

Figure 26

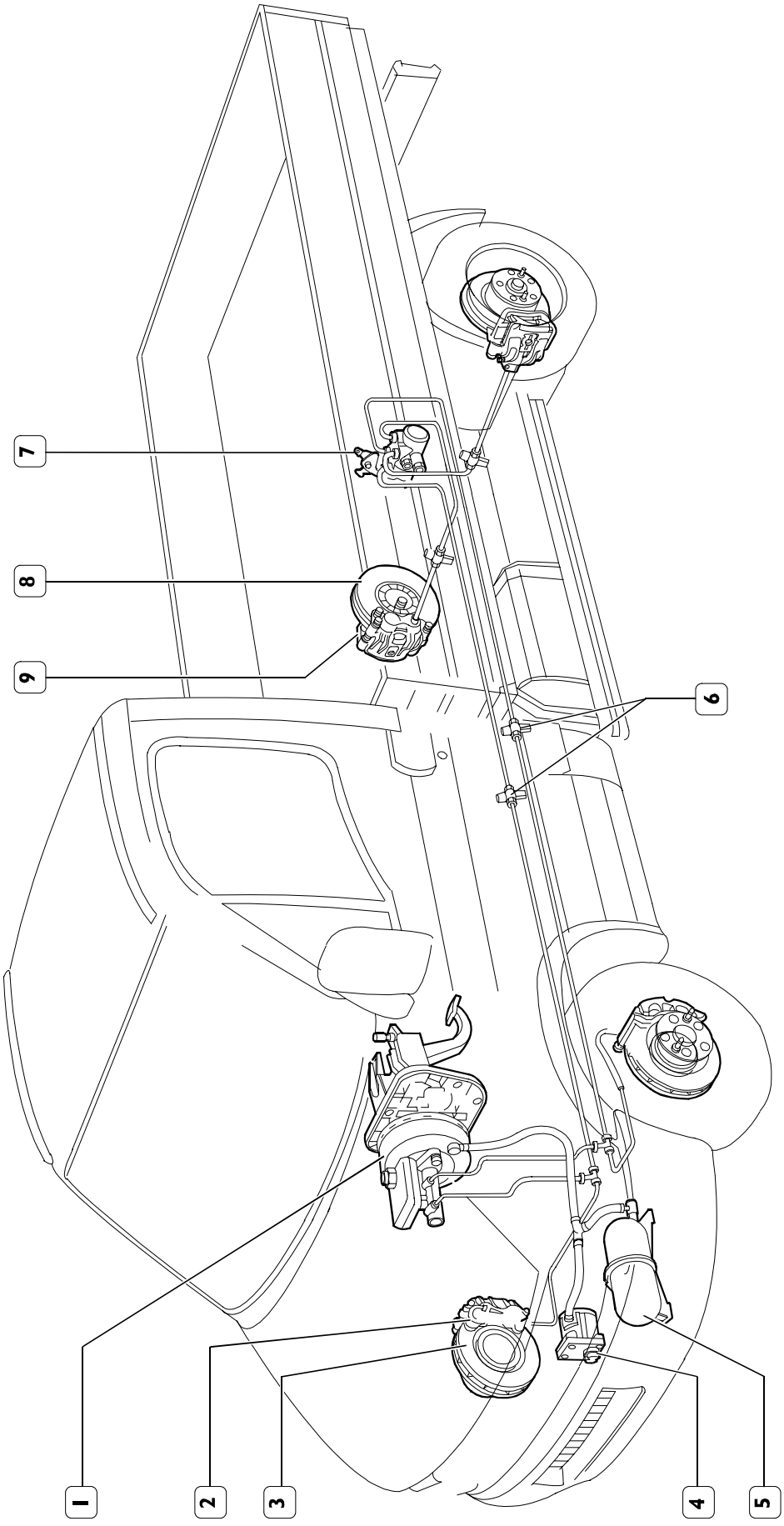

1. Servo brake - 2. Front brake caliper - 3. Front brake disc - 4. Vacuum pump - 5. Vacuum tank - 6. Pressure test points - 7. Brake-force corrector - 8. Rear brake disc - 9. Rear brake caliper.

Vehicles 35C - 40C - 45C - 50C - 60C - 65C

Figure 27

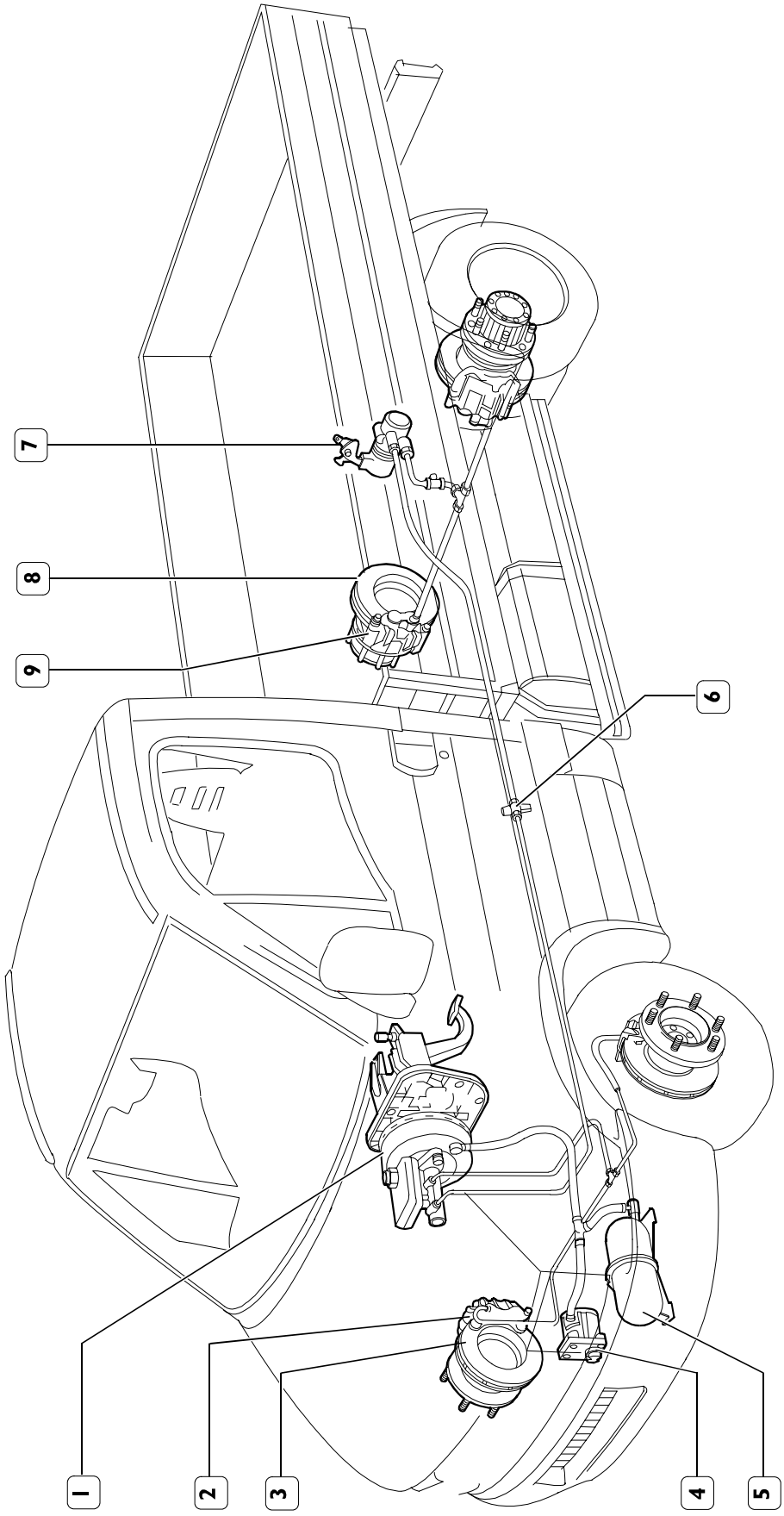

1.Servo brake - 2. Front brake caliper - 3. Front brake disc - 4. Vacuum pump - 5. Vacuum tank - 6. Pressure test point - 7. Proportional load valve - 8. Rear brake disc - 9. Rear brake caliper

Location of the main brake system components on vehicles with ABS - ABD - EBD

Vehicles 29L - 35S

Figure 28

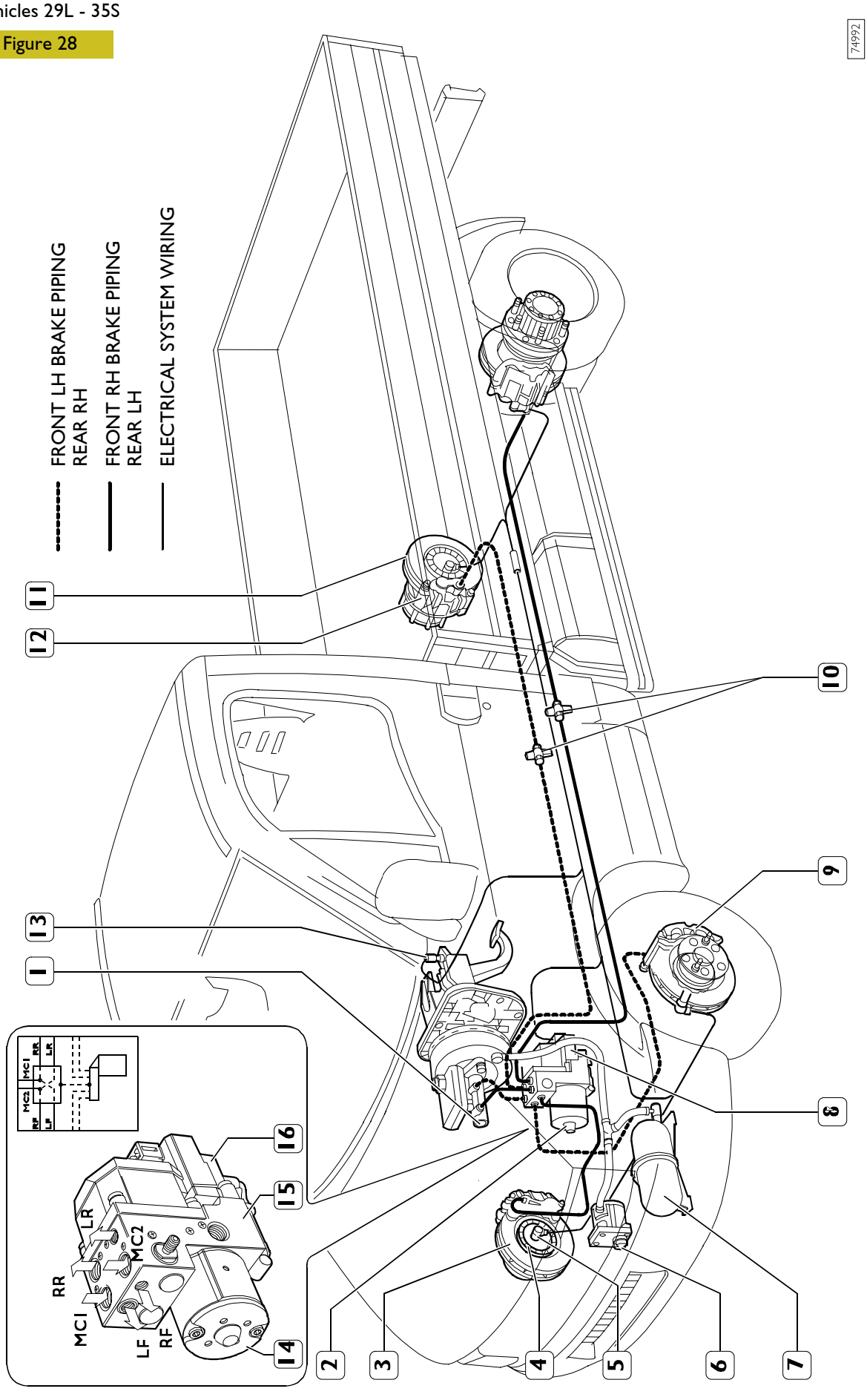

1. Vacuum brake - 2. Electrohydraulic modulator - 3. Front brake disk - 4. Phonic wheel - 5. Wheel revs sensor - 6. Vacuum device - 7. Vacuum chamber - 8. Electronic control unit - 9. Front brake caliper - 10. Hydraulic pressure check sockets - 11. Rear brake disk - 12. Rear brake caliper - 13. Brake lights indicator switch (on vehicles with EDC there are two switches), inform the ABS - EDC control unit that the vehicle is braking - 14. Hydraulic accumulator - 15. Electrohydraulic modulator - 16. Electronic control unit.

Vehicles 35C - 40C - 45C - 50C - 60C - 65C

Figure 29

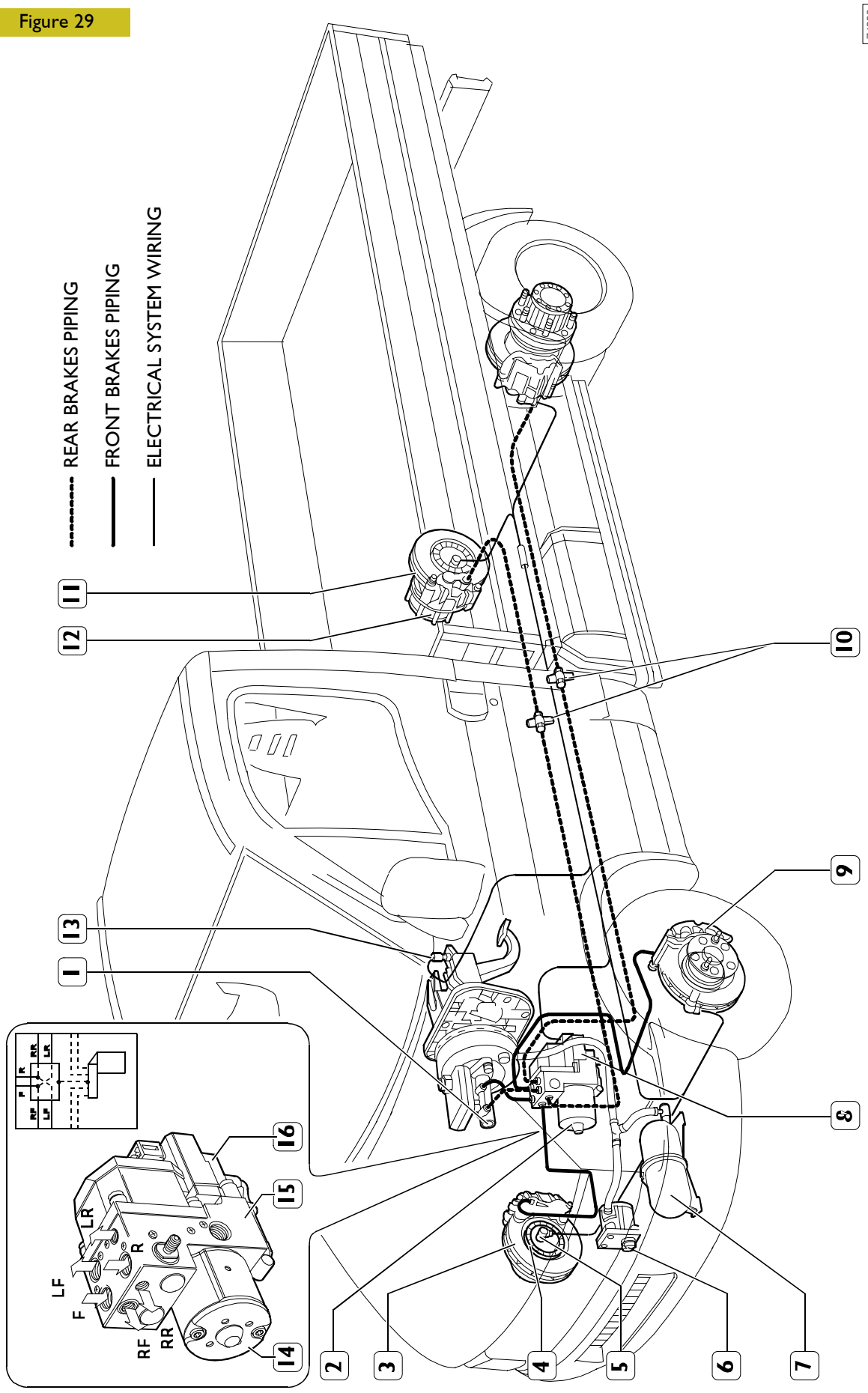

1. Vacuum brake - 2. Electrohydraulic modulator - 3. Front brake disk - 4. Phonic wheel - 5. Wheel revs sensor - 6. Vacuum device - 7. Vacuum chamber - 8. Electronic control unit - 9. Front brake caliper - 10. Hydraulic pressure check sockets - 11. Rear brake disk - 12. Rear brake caliper - 13. Brake lights indicator switch (on vehicles with EDC there are two switches), inform the ABS - EDC control unit that the vehicle is braking - 14. Hydraulic accumulator - 15. Electrohydraulic modulator - 16. Electronic control unit.

DESCRIPTION

Service brake

The service brake is of the pedal type with two independent hydraulic circuits. Both circuits are served from the vacuum-type servo brake.

The load proportioning valve is inserted in the hydraulic circuit of the rear brakes so as to compensate the braking action of the rear wheels as a function of the load being carried.

By means of a servo brake the pedal acts on the twin section master cylinder that puts the brake liquid under pressure.

Movement of the pistons in the caliper casing, as a consequence of the hydraulic pressure, causes the brake linings to be compressed on both surfaces of the brake disc and therefore brings the vehicle to a standstill.

Emergency brake

Incorporated in the service brake, the twin circuit system allows a single axle to brake even when the other brake is faulty, by acting on the service brake pedal.

Parking brake

Mechanical design consisting of a hand lever and associated linkages and wires that act on the rear wheel bakes.

BRAKES

Front and Rear disc brakes

- ❑ Front BREMBO 2x42 (model 29L - 35S);
- ❑ Front BREMBO 2x44 (model 35C - 40C - 45C - 50C);
- ❑ Front BREMBO 2x52 (model 60C - 65C);
- ❑ Rear BREMBO 1x52 (model 29L - 35S);
- ❑ Rear BREMBO 2x44 (model 35C - 40C - 45C - 50C).
- ❑ Rear BREMBO 2x46 (model 60C - 65C).

An electric wire is embedded in the brake linings which is connected to a tell-tale light on the driving panel to indicate the lining wear.

DIAGNOSTICS

Main operating faults in the brake system:

1 - Rear axle service brake is inefficient or irregular

2 - Front axle service brake is inefficient or irregular

3 - Inefficient or no parking brake

4 - Delayed action of parking brake

5 - Vehicle skids when braking

6 - Rapid brake lining wear

7 - Too long or abnormal travel of brake pedal

8 - Noisy brakes

1 REAR AXLE SERVICE BRAKE IS INEFFICIENT OR IRREGULAR

Leaks or breakage in pneumatic system pipes.	– YES →	Tighten or replace damaged fittings. Replace broken or damaged pipes.
NO ↓		
Worn or vitrified brake linings.	– YES →	Overhaul or replace the brake linings.
NO ↓		
Automatic clearance device is faulty (caliper 1x52).	– YES →	Replace the brake caliper.
NO ↓		
Rear brakes are faulty.	– YES →	Overhaul the rear brakes, replacing worn parts.
NO ↓		
Servo brake is faulty.	– YES →	Overhaul or replace servo brake
NO ↓		
Load proportioning valve is faulty (vehicles without ABS).	– YES →	Adjust and, if necessary, replace the load proportioning valve.

(Continue)

Brake liquid has not been periodically changed.	– YES →	Replace brake liquid.
NO ↓		
Presence of air in hydraulic system.	– YES →	Bleed-off any air from hydraulic system.
NO ↓		
ABS system is faulty.	– YES →	Make diagnosis with Modus.

2 FRONT AXLE SERVICE BRAKE IS INEFFICIENT OR IRREGULAR

Leaks or breakage in pneumatic system pipes.	– YES →	Tighten or replace loose or damaged fittings. Replace broken or damaged pipes.
NO ↓		
Worn or vitrified brake linings.	– YES →	Overhaul or replace the brake linings.
NO ↓		
Servo brake is faulty.	– YES →	Overhaul or replace servo brake
NO ↓		
Brake caliper is faulty.	– YES →	Overhaul and, if necessary, replace brake caliper.

(Continue)

Front brakes are faulty. – YES → Overhaul and, if necessary, replace any worn parts.

NO

Brake liquid has not been periodically changed. – YES → Replace brake liquid.

NO

Presence of air in hydraulic system. – YES → Bleed-off any air from hydraulic plant.

NO

ABS system is faulty. – YES → Make diagnosis with Modus.

3 INEFFICIENT OR NO PARKING BRAKE

Tie-rods are faulty. – YES → Adjust or overhaul tie-rods and replace any worn parts.

NO

Worn or vitrified brake linings. – YES → Overhaul or replace the brake linings.

NO

Rear brakes are faulty. – YES → Overhaul the brakes and replace any worn parts.

4 DELAYED ACTION OF PARKING BRAKE

Tie-rods are faulty.
– YES → Overhaul tie-rods and replace any worn parts.

NO

Shoe return springs are faulty.
– YES → Replace shoe return springs.

NO

Rear calipers are faulty (calipers 1x52).
– YES → Overhaul calipers and replace any worn parts.

NO

Parking drum brake is faulty (2x44 calipers).
– YES → Adjust or overhaul the parking drum brake and replace any worn parts.

5 VEHICLE SKIDS WHEN BRAKING

Leaks or breakage in hydraulic system pipes.
– YES → Tighten or replace loose or damaged fittings. Replace broken or damaged pipes.

NO

Load proportioning valve is faulty (vehicles without ABS).
– YES → Adjust and, if necessary, replace load proportioning valve.

(Continue)

Front brakes are faulty. – YES → Overhaul front brakes.

NO

Rear brakes are faulty. – YES → Overhaul rear brakes.

NO

ABS system is faulty. – YES → Make diagnosis with Modus.

6 RAPID BRAKE LINING WEAR

Load proportioning valve is faulty (vehicles without ABS). – YES → Adjust and, if necessary, replace load proportioning valve.

NO

Brakes are faulty. – YES → Overhaul brakes.

7 TOO LONG OR ABNORMAL TRAVEL OF BRAKE PEDAL

Servo brake is faulty.

– YES → Replace servo brake.

NO

Automatic clearance device is faulty (calipers 1x52).

– YES → Replace automatic clearance device.

NO

Brake liquid with low boiling point due to:

- ❑ Failure to perform yearly change
- ❑ Presence of water in system
- ❑ Use of wrong liquids.

– YES → Replace brake liquid (use type Tutela DOT SPECIAL).

NO

Presence of air in hydraulic system.

– YES → Bleed-off any air from hydraulic system.

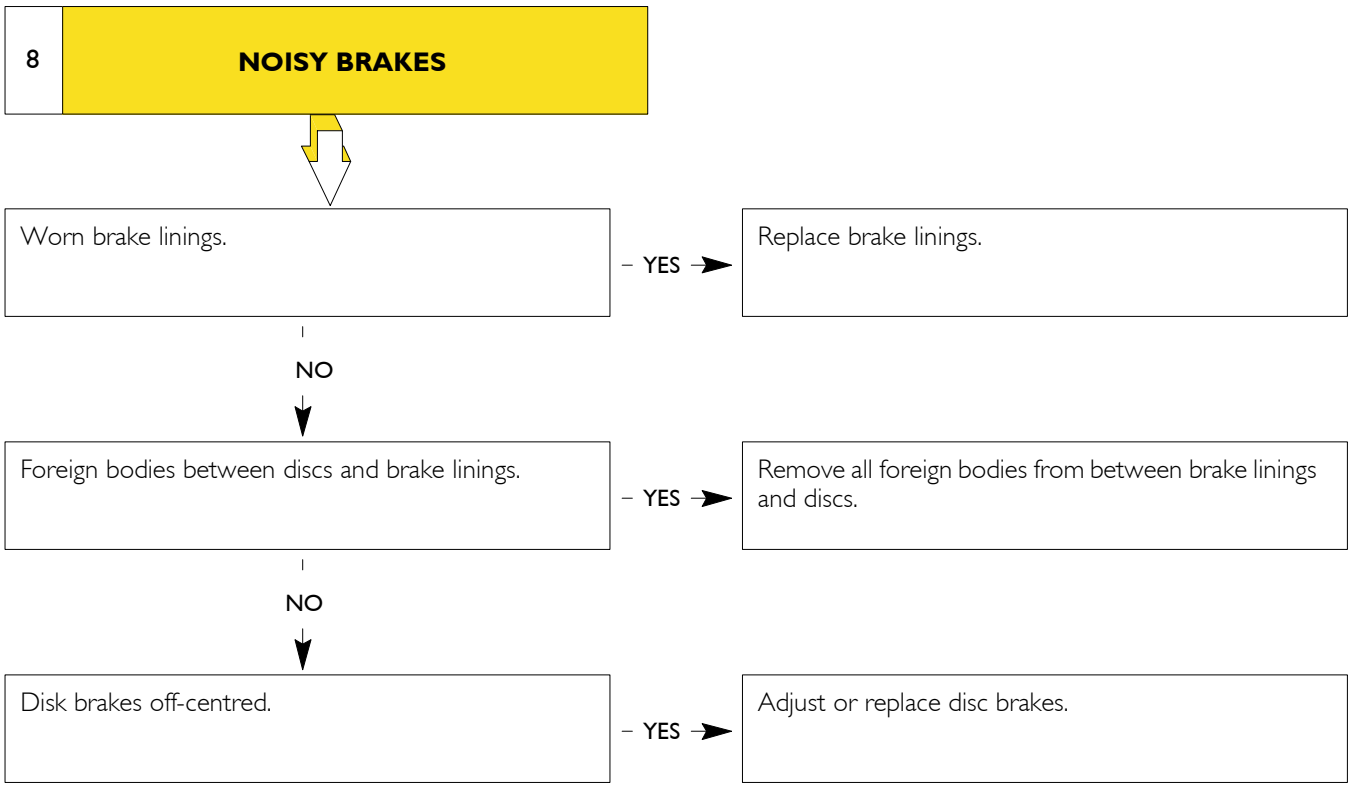
8
NOISY BRAKES
Worn brake linings.
YES
Replace brake linings.
NO
Foreign bodies between discs and brake linings.
YES
Remove all foreign bodies from between brake linings and discs.
NO
Disk brakes off-centred.
YES
Adjust or replace disc brakes.

TIGHTENING TORQUES

COMPONENT	TORQUE	
	Nm	kgm
Screw securing cover and brake disc to wheel hub (Front axle 5818 - 5823)	98.1 ÷ 107.9	9.8 ÷ 10.7
Screw securing brake disc to wheel hub (Front axle 5817)	19.5 ÷ 24	1.9 ÷ 2.4
Screws to fasten wheel (Front axle 5817 - Rear axle 450210)	160	16
Screws to fasten wheel (Front axle 5818)	284 ÷ 342	28.4 ÷ 34.2
Screws to fasten brake caliper support to stub axle (Axle 5818 - 5817)	176 ÷ 217	17,6 ÷ 21,7
Screws to fasten cover to stub axle (Front axle 5818 - 5817 - 5823)	6 ÷ 7.5	0.6 ÷ 0.7
Ring nut securing brake disc to wheel hub (Front axle 5817 - 5823)	256 ÷ 314	25.6 ÷ 31.4
Ring nut securing wheel hub (Front axle 5818 - 5819)	257 ÷ 314	25.7 ÷ 31.4
Screw securing ring nut (Front axle 5818 - 5819 - 5823)	20 ÷ 24	2 ÷ 2.4
Screw securing caliper to caliper mounting (Front axle 5818 - 5819 - 5823)	176 ÷ 217	17,6 ÷ 21,7
Nut securing wheel (Rear axle 450311/1 - 450511)	290 ÷ 349	29 ÷ 34.9
Screw securing disc and drive shaft (Rear axle 450210)	13 ÷ 21	1.3 ÷ 2.1
Screw securing drive shaft to wheel hub (Rear axle 450311/1 - 450511)	63 ÷ 76	6.3 ÷ 7.6
Screw securing brake caliper (Rear axle 450210)	176 ÷ 217	17.6 ÷ 21.7
Ring nut retaining wheel hub bearing (Rear axle 450311/1 - 450511)	618 ÷ 667	61.8 ÷ 66.7
Screws securing brake disc to wheel hub (Rear axle 450311/1 - 450511)	69 ÷ 76	6.9 ÷ 7.6
Screws securing caliper moutning to shoe mounting (Rear axle 450311/1 - 450511)	180 ÷ 220	18 ÷ 22
Fixing stud to brake disc (spread IVECO 1905683 sealant on the thread) (Front axle 5818 - 5819)	85 ÷ 104	8.5 ÷ 10.4
Screw to fasten brake caliper support to stub axle (Front axle 5819)	154 ÷ 170	15.4 ÷ 17
Screw securing plate and brake disc to wheel hub (Front axle 5819)	94 ÷ 115	9.4 ÷ 11.5
Nut securing wheel (Front axle 5819 - 5823 - Rear axle 450517/2)	284.5 ÷ 343.3	28.5 ÷ 34.3
Screw to fasten cover and sheet metal guard to rear axle box (Rear axle 450210)	81 ÷ 100	8.1 ÷ 10
Screw to fasten cover and sheet metal guard (Rear axle 450210)	10 ÷ 16	1 ÷ 1.6
Ring nut securing drive shaft (Rear axle 450210)	300 ÷ 350	30 ÷ 35
Screw securing shoe mounting to rear axle box (Rear axle 450311/1 - 450511)	85 ÷ 97	8.5 ÷ 9.7
Screws securing sheet metal guard (Rear axle 450311/1 - 450511)	8	0.8
Screw securing caliper to caliper mounting (Front axle 5817)	176 ÷ 217	17.6 ÷ 21.7
Sensor support retaining screw (Rear axle 450311/1 - 450511 - 450517/2)	5 ÷ 7	0.5 ÷ 0.7

TIGHTENING TORQUES

COMPONENT	TORQUE	
	Nm	kgm
Screw securing brake disc to wheel hub (Front axle 5823)	98 ÷ 108	9.8 ÷ 10.8
Screws to fasten brake caliper support to stub axle (Axle 5823)	176 ÷ 217	17.6 ÷ 21.7
Ring nut securing wheel hub (Front axle 5823)	363 ÷ 441	36.3 ÷ 44.1
Screw securing drive shaft to wheel hub (Rear axle 450517/2)	56 ÷ 69	5.6 ÷ 6.9
Screw securing brake caliper (Rear axle 450517/2)	150 ÷ 177	15 ÷ 17.7
Ring nut retaining wheel hub bearing (Rear axle 450517/2)	441 ÷ 540	44.1 ÷ 54
Screws securing brake disc to wheel hub (Rear axle 450517/2)	54 ÷ 59	5.4 ÷ 5.9
Fixing stud to brake disc (spread IVECO 1905683 sealant on the thread) (Front axle 5823)	52 ÷ 64	5.2 ÷ 6.4
Screw securing shoe mounting to rear axle box (Rear axle 450517/2)	52 ÷ 57	5.2 ÷ 5.7
Screw securing caliper to caliper mounting (Front axle 450517/2)	26 ÷ 30	2.6 ÷ 3
Brake shoe/axle casing retaining screw (Rear axle 450517/2)	52 ÷ 57	5.2 ÷ 5.7
Calliper guide bushing socket head screw	28 ÷ 32	2,8 ÷ 3,2

TOOLS

TOOL NO.		DESCRIPTION
99301005	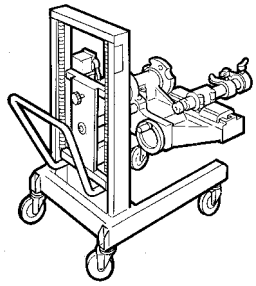	Brake disc assembly
99306010	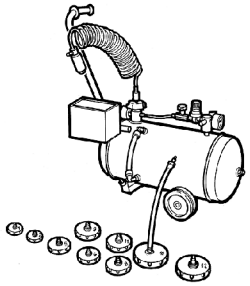	Appliance to bleed air from brake and clutch systems
99321024	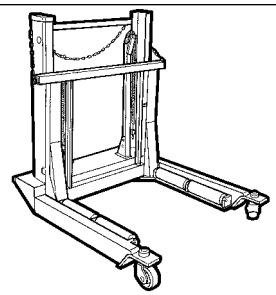	Hydraulic trolley for removing/refitting wheels
99355087	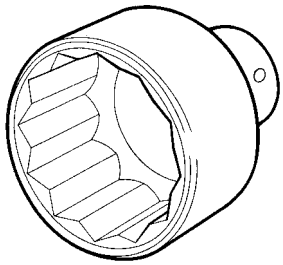	Wrench (65 mm) for wheel hub nut (450311/1 - 450511)
99355176	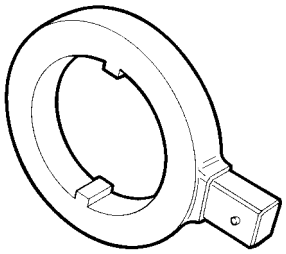	Wrench for ring nut retaining drive shaft bearing (rear axle 450210)
99357080	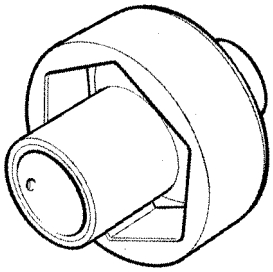	Spanner (91.5 mm) for adjusting wheel hub bearings nut (Rear axle 450517/2)

TOOL NO.		DESCRIPTION
99370241	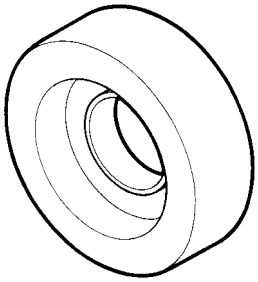	Tool for mounting drive shaft bearing (rear axle 450210).
99370496	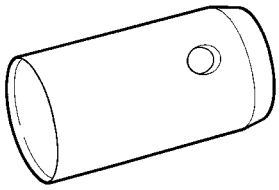	Guide for mounting wheel hub (front axle 5819 - 5818)
99370497	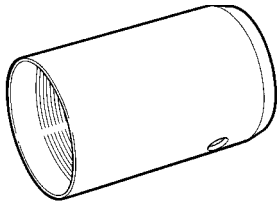	Guide for mounting wheel hub (rear axle 450311/1 - 450511)
99370498	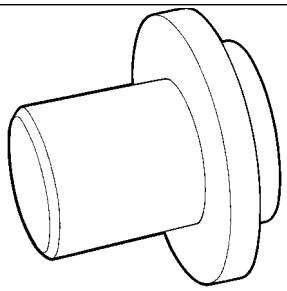	Tool for driving bearing and phonic wheel onto wheel hub (rear axles 450311/1 - 450511)
99370713	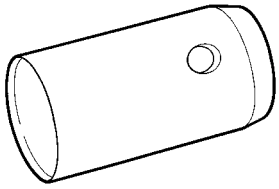	Guide for mounting wheel hub (front axle 5823)
99372236	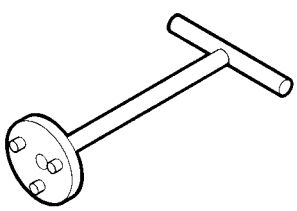	Tool to retract brake caliper piston (rear axle 450210)

TOOL NO.		DESCRIPTION
99372249	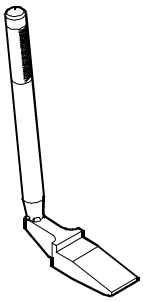	Parking brake shoes adjusting tool
99372269	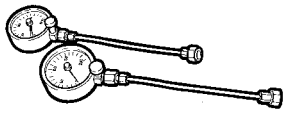	Pair of gauges to check pressure and to adjust hydraulic brakeforce distributor
99374132	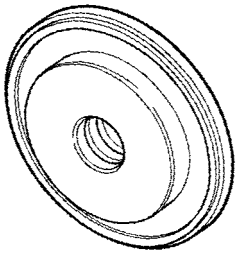	Tool for fitting wheel hub internal seal (use with 99370006) (Axle 450517/2)
99386523	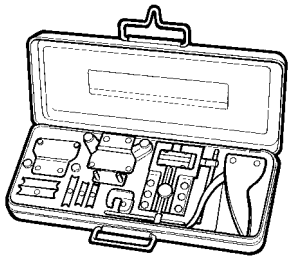	Flanging tool for brake system pipes
99389819	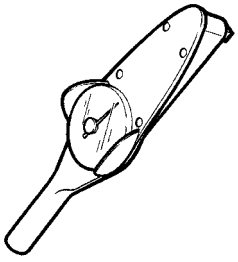	Torque wrench (0 ÷ 10 Nm) with square 1/4" connection.

SPECIFICATIONS AND DATA - HYDRAULIC SYSTEM

DESIGNATION		
Vacuum pump		
❑ BOSCH D.151-B		
Emptying time (4.5 litre tank) at a pressure of:	0.5 bar	4.5 S
	0.8 bar	12.5 S
Vacuum servo brake		
❑ BOSCH 136.905 (single-chamber)		
Pneumatic cylinder diameter		279.4 mm
Hydraulic (or master) cylinder diameter		23.81 mm
Stroke		21 + 21 mm
❑ BOSCH 136.895 (single-chamber)		
Pneumatic cylinder diameter		279.4 mm
Hydraulic (or master) cylinder diameter		25.4 mm
Stroke		20.5 + 20.5 mm
❑ BOSCH 0204021854 (dual)		
Pneumatic cylinder diameter		279.4 mm
Hydraulic (or master) cylinder diameter		26.99 mm
Stroke		20.5 + 20.5 mm
❑ BOSCH 0204021934 (dual)		
Pneumatic cylinder diameter		254 mm
Hydraulic (or master) cylinder diameter		28.57 mm
Stroke		23.5 + 17.5 mm
Pneumatic operated load proportioning valve		
❑ BOSCH 26/08094 - BOSCH 796801		
Ratio		0.25
❑ BOSCH 796803		
Ratio		0.15
Electro-hydraulic control unit/modulator		
❑ BOSCH 0 265 219 442		
❑ BOSCH 0 265 219 426		
❑ BOSCH 0 265 220 500		

SPECIFICATIONS AND DATA - BRAKES

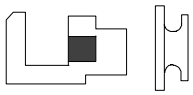 **FRONT AXLE DISC BRAKES**		**5817**	**5818**	**5819**	**5823**
	Brake caliper cylinders:				
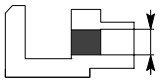	- quantity	2	2		2
	- diameter Ø mm	42	44		52
	Brake lining thickness:				
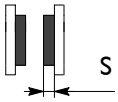	- normal S mm	12	15		
	- min. allowed S mm	2.9 ÷ 3.4 (*)			
	Disc brake diameter Ø mm	$276^{\pm 0.2}$	$290^{\pm 0.2}$		$276^{\pm 0.2}$ $290^{\pm 0,2}$
	Disc brake thickness:				
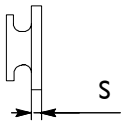	- normal S mm	$22^{\pm 0.2}$			$22^{\pm 0.2}$ $26^{\pm 0,1}$
	- min. allowed S mm	19			

(*) Remaining thickness of friction material to have the light on (cutting cable)

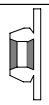 **AXLE WHEEL HUBS**					
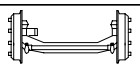	Type of front axle	**5817**	**5818**	**5819**	**5823**
	Wheel hub bearings	UNIT-BEARING			
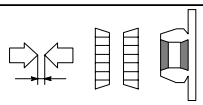	Wheel hub bearings end play mm	-			0.110 min
		-			0.140 max
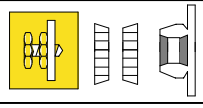	Wheel hub bearing axial clearance adjustment	Not adjustable Retaining nut torque			

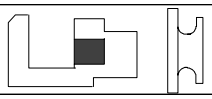 **REAR AXLE DISC BRAKES**		**450210**	**450511 450311/1**	**450517/2**
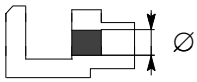 Brake caliper cylinders:				
- quantity		1	2	2
- diameter	mm	52	44	46
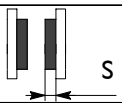 Brake lining thickness:			15	
- min. allowed	S mm		2.9 ÷ 3.4 (*)	
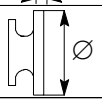 Disc brake diameter	mm	276 ± 0.2	289 $^{+0.2}_{-0}$	306 ± 0.2
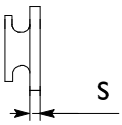 Disc brake thickness:				
- normal	S mm	16 ± 0.1	22 $^{+0.1}_{-0}$	22 ± 0.1
- min. allowed	S mm	13	19	19
Parking drum brake				
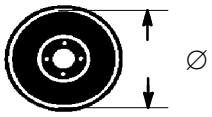 Drum diameter:				
- Nominal	Ø mm		172 $^{+0.15}_{-0}$	190 $^{+0.15}_{-0}$
			Max 173 mm	191
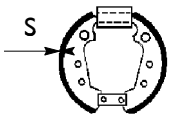 Brake lining thickness:				
- Nominal	S mm		4.25 mm	6.2
- Min. allowed	S_1 mm		Min. 1.5 mm	3.5
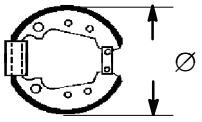 Brake lining diameter:				
- Nominal	Ø mm		171.2 ÷ 171.5	189.2 ÷ 189.5
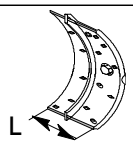 Brake lining width	L mm		~42	
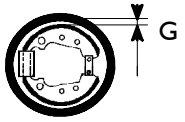 Clearance between brake linings and drum	G mm		0.2 ÷ 0.5	0.3 ÷ 0.4

(*) Remaining thickness of friction material to have the light on (cutting cable)

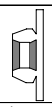 **AXLE WHEEL HUBS**		**450210**	**450511 450311/1**	**450517/2**
 Wheel hub bearings		UNIT-BEARING		SET-RUGHT
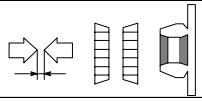 Wheel hub bearings end play	mm	-		0.16
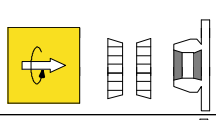 Wheel hub bearings rolling torque				
	Nm	-		0 ÷ 4
	kgm	-		0 ÷ 0.4
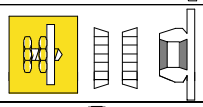 Adjustment of wheel hub bearings end play		Not adjustable Retaining nut torque		
 Rear axle oil		TUTELA W140/M-DA (SAE 85 W 140)		
Quantity	Litres	1.85	1.90	2.65

CHECKS

Device	Designation	Checks
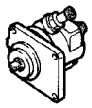	**Pressure Reducer**	Connect a vacuum meter to the intake line. At full operation the pressure reduction must reach the value of 0.80 ÷ 0.85 bar. If this value is not obtained, check if there are any leaks in the pressure piping and servo brake components. Check that the distance between the top of the rotor and cover (with unit fitted) is comprised in the range 0.07 ÷ 0.14mm.
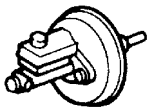	**Vacuum servo brake**	Check the functionality and that there are no leaks. With the vacuum meter fitted on the piping between the pressure reducer and servo brake with engine at full speed, check that the pressure reduction values are in the range 0.80 ÷ 0.85 bar with the pedal both released and pressed fully down for a period of 1 minute of rotation of the engine.
	Brake liquid compensation tank	Check the level of the brake liquid and eventually top up with Tutela DOT SPECIAL to the specified level. Change the brake liquid once per year.
	**Load proportioning valve**	Check that the values measured with special manometers, via the test points, correspond to those indicated on the self-adhesive plate applied to the inside of the vehicle.
	**Disk brake caliper**	Check the condition of the brake linings; check for scratches on the discs and the efficiency of the pistons.
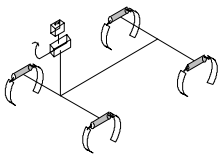	**Pipes and fittings**	Ensure that metal pipes are in perfect condition, with no dents or cracks. Also make sure that they are not near sharp edges of the body work or chassis that could damage them. Check that the rubber and cloth flexible hoses are not in contact with oil or mineral grease, or rubber solvents. Press hard on the brake pedal and check that the pipes are not blown, and check that there are no leaks. Check that all brackets fastening the pipes are securely fixed - loose fastenings cause vibrations that could give rise to breakage. Check that there are no leaks from fittings, otherwise tighten them fully, taking care when tightening not to cause irregular pipe torsion. In all the above cases the parts are to be replaced if there is a minimum of doubt as to their efficiency. Apart from their condition, it is recommended to replace hoses after considerable mileage, or after a period of long vehicle use. This will avoid sudden breakage due to age and fatigue.

Functional check of vacuum brake system

With the engine stopped, press the brake pedal a few times in order to annul the vacuum in the servo brake. Press the pedal once again and keep it pressed, in the brake position, by putting a certain pressure on it. Start the engine and check the pedal stroke:

- ❑ if the stroke of the pedal increases, this implies that the servo brake and pipes are satisfactory;
- ❑ if the pedal remains still, this implies that the outside has penetrated into the vacuum plant that is not perfectly sealed, or the servo brake is faulty.

BRAKING SYSTEM MAIN COMPONENTS

790530 Vacuum pump

Figure 30

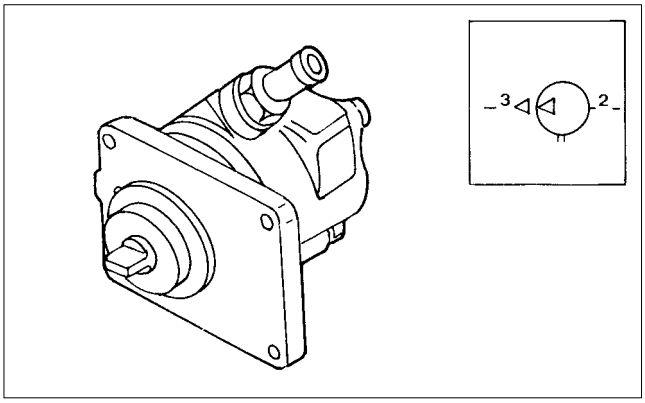

32277

This is the component which generates a reduction in pressure for operation of the servo brake.

Diagnostics

TROUBLE	POSSIBLE CAUSES	CURE
Oil leakage from cover	Incorrect driving torque between power reducer and engine.	Lock screws to correct driving torque indicated in appropriate table.
	Cover seal surface not completely flat.	Check the seal surfaces, replace any defective parts or place them on a flat surface.
	Broken seal between pump and engine.	Replace seal.
Poor efficiency	Excessive backlash between the blades and sliding surfaces.	Replace blades, or the entire pressure reducer.
	Bad sealing of connecting pipes or uni-directional valve.	Check the seal and eventually replace the connecting pipes or replace the uni-directional valve.
	Insufficient lubrication.	Carefully clean the oil pipes.

794101 Vacuum servo brake

Figure 31

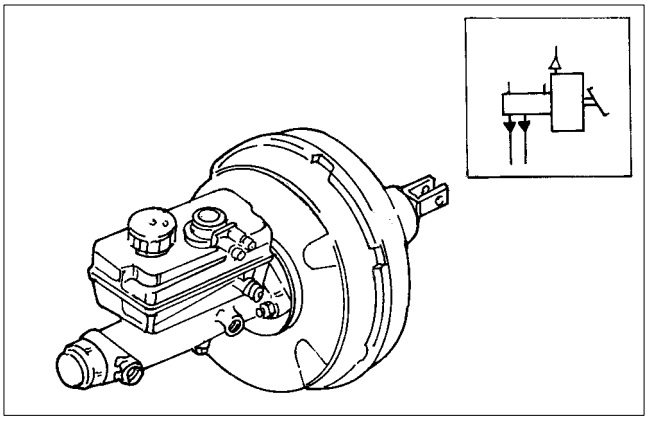

32279

This is a device which increases the force applied by the pedal and consists of two main components:

- a power reducer pneumatic section;
- an hydraulic section (master cylinder and brake liquid tank).

The servo brake is manufactured in such a way that in case the pneumatic section fails, the brakes can still work. In this case the braking action is obtained by one master cylinder.

784010 Bleeding air from the hydraulic circuit

Front brake circuit

Figure 32

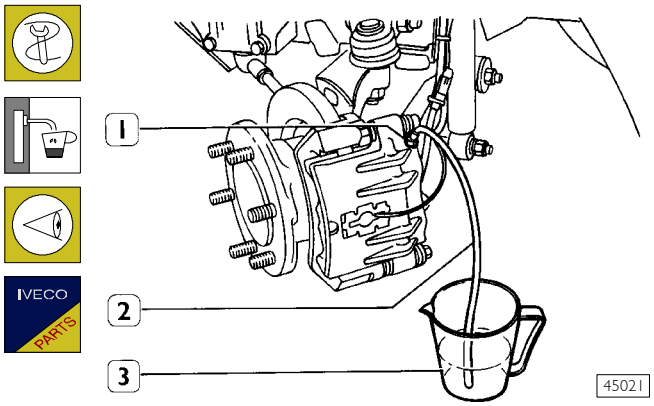

One end of a transparent plastic pipe (2) should be fitted to the bleeder screw (1) with the end placed into a container (3) that has been partially filled with brake liquid.

Repeatedly press the brake pedal

By maintaining the brake pedal in the down position unscrew the bleeder screw (1) one full turn.

Tighten the bleeder screw, repeatedly press the brake pedal.

Repeat the above operation until the brake liquid comes out in a uniform manner.

Bleed off the air from the opposite brake assembly. Check that the level of brake liquid in the relevant tank is always sufficient.

This operation will allow the air in the hydraulic circuit liquid piping to be expelled.

Rear brake circuit

Figure 33

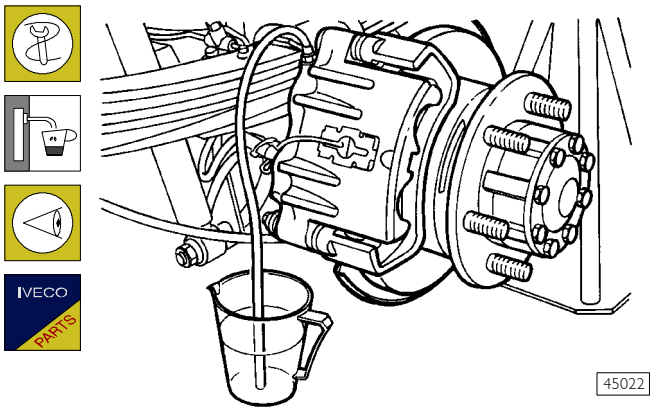

Disconnect the load proportioning valve control rod and lock it at the top so as to set the proportioning valve in the fully open position.

Bleed off the air from the hydraulic circuit as described for the front brake circuit.

Having terminated this operation connect the load proportioning valve control rod.

Finish bleeding-off air from the brake circuit, top up to the maximum level with Tutela DOT SPECIAL brake liquid.

784010 Bleeding air from the hydraulic circuit with de-aerator device

Front brake circuit

Figure 34

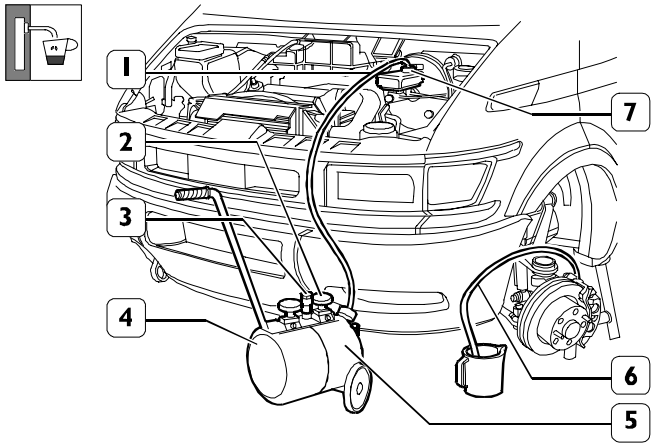

As an alternative you can bleed-off air from the brake circuit with the deaerator device 99306010 by following the procedures below:

- ❑ load the air tank (4);
- ❑ fill the tank with brake liquid (5);
- ❑ one end of a transparent plastic pipe (6) should be fitted to the bleeder screw with the end placed into a container that has been partially filled with brake liquid;
- ❑ replace the brake liquid tank cover with one (7) taken from the box supplied with the deaerator;
- ❑ insert the deaerator 99306010 pipe (1) on the cover of the brake liquid tank;
- ❑ unscrew the bleeder screw one full turn, open the cock valve (3) until there is a reading of 1 ÷ 1.2 bar on the manometer (2).

When the brake liquid comes out in a uniform manner from the circuit, close the bleeder screw and discharge air from the aerator tank (4). Repeat this operation for all wheels.

784310 Mechanically controlled load sensing valve (vehicles 35C - 40C - 45C - 50C - 60C - 65C)

Figure 35

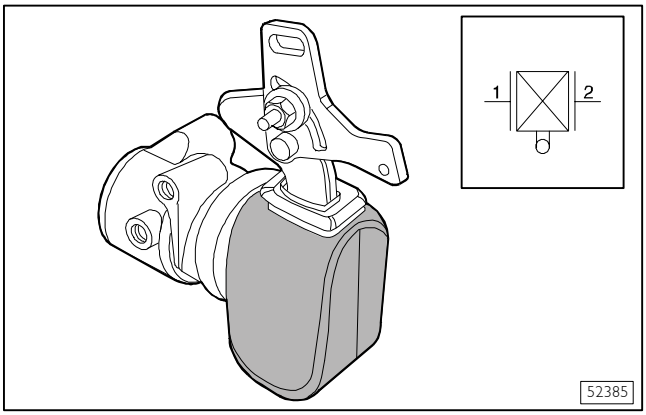

The load proportioning valve automatically adjusts, as a function of the load acting on the rear axle, the braking torque produced by the brakes of the axle itself. This valve has the important job, especially when the vehicle is light without any load, to limit the braking torque that would otherwise block the rear wheels with a consequent skidding and jerking of the vehicle.

Figure 36

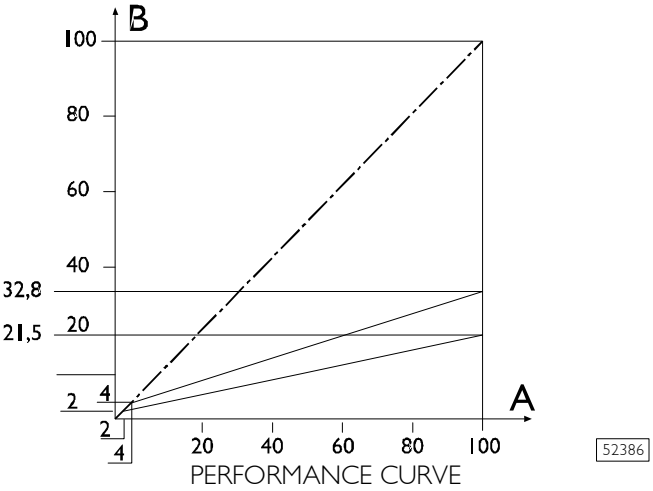

PERFORMANCE CURVE

A. Inlet pressure (Bar) - B. Outlet pressure (bar)
Ratio = 0.25

Regulation of load proportioning valve on vehicle

To stop the vehicle from skidding or the wheels from being locked when braking, you must check the device at regular intervals and eventually adjust if necessary. This consists in verifying the values indicated on the plate (Figure 37) applied on the inside of the bonnet.

If there is no plate or if the data is missing, ask the manufacturer for a duplicate by indicating:

- ❑ Vehicle type
- ❑ Number of leaf springs
- ❑ Vehicle pitch
- ❑ Weight of rear axle
- ❑ Number of load proportioning valve

Figure 37

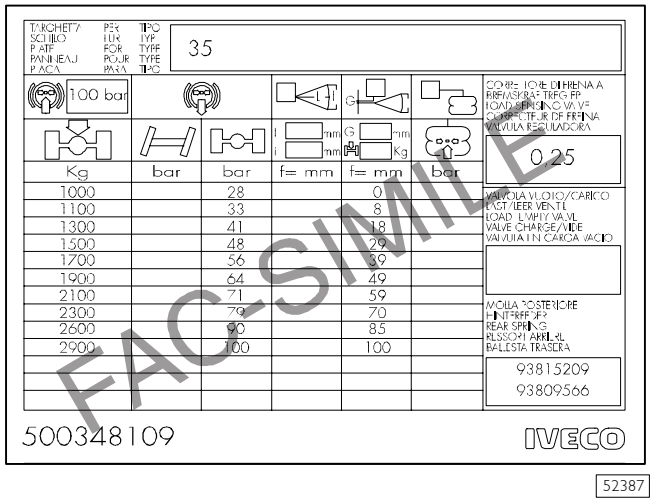

FAC-SIMILE

LOAD PROPORTIONING VALVE PLATE

The operations are to be carried out in the following order:

- ❑ set the vehicle with its rear wheel on a weighing machine 99336914 or on the brake test bench;
- ❑ connect the pressure gauges 99372269 or Modus to the pressure test points upstream from the load proportioning valve;
- ❑ if the pressure gauges are not equipped with a valve for automatic bleeding, bleed off the air through the pressure gauges by unscrewing the appropriate ring nuts;
- ❑ load the vehicle so as to have a load (B) on the rear axle divided equally between the right- and left-hand sides of the vehicle with a tolerance of ±5 kg;

Figure 38

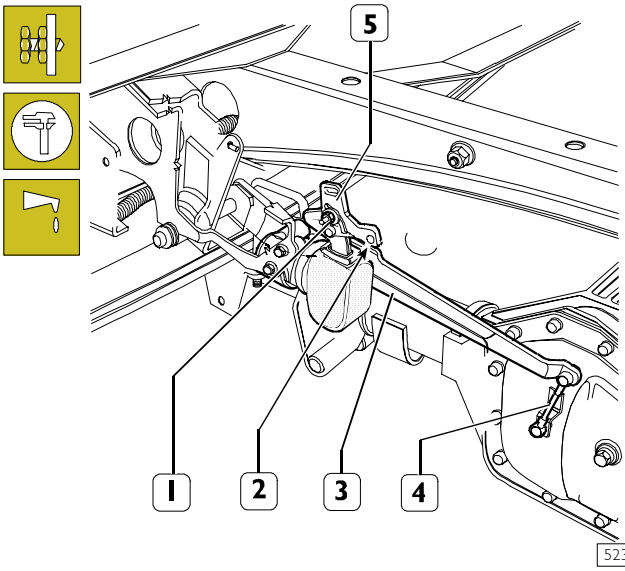

- ❑ loosen the nut (1);
- ❑ connect a weight (A, page 50) to the plate (5) at point (2);
- ❑ tighten the nut (1) at the specified torque and remove the loads (A and B).
- ❑ start up the engine;

❑ Load the vehicle to obtain the loading sequence shown in the table in fig. 37, equally shared on the rear axle on the left and right sides of the vehicle with a tolerance of ± 5 kg.

Figure 39

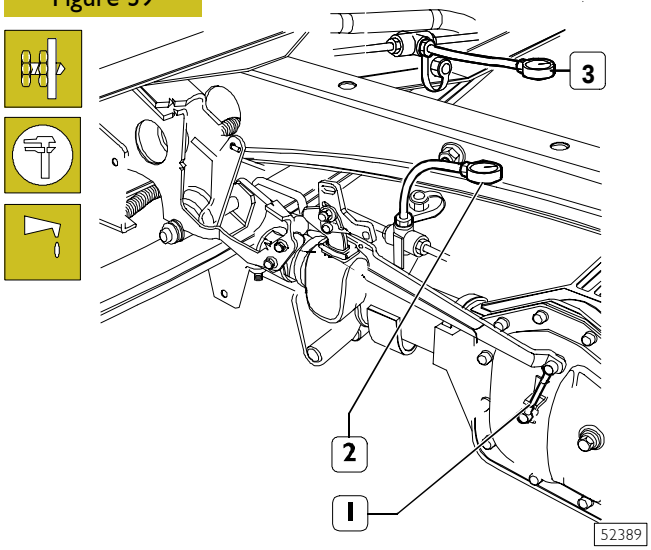

❑ with the engine idling and a pressure of 100 bar, shown on the pressure gauge (3) upstream from the sensing valve, check that the outlet pressure shown on the pressure gauge (2) downstream from the sensing valve corresponds to the values given on the rating plate, otherwise replace the sensing valve;

❑ Proceed as follows if the pressure read downstream of the corrector do not correspond to the values shown in Figure 37.

❑ Disconnect the bar (4, Figure 38) from the axle.

❑ in addition, use the transmission lever (3, Figure 38) to check that the load sensing valve stem runs smoothly in its seat, otherwise replace the sensing valve;

❑ reconnect the adjustment rod (4, Figure 38) to the rear axle;

Perform the check by gradually increasing the pressure.

To check the load sensing valve, all the components of the braking system must be in full working order. In addition, in the case of replacing the leaf springs for special versions it is necessary to install a new rating plate whose values are correct.

❑ Once the checks have been completed, verify the operation of the brakes by testing them.

TABLE OF LOADS FOR ADJUSTING THE LOAD SENSING VALVE

Model	Load (A) kg	Load (B) kg
35C	3.5	1500
40C	3	1500
45C	4	1800
50C semi-elliptic and double flex. parabolic leaf springs	9	1800
50C single flex. parabolic leaf springs.	4.5	1800

784310 Dual mechanically controlled load sensing valve (vehicles 29L - 35S)

Figure 40

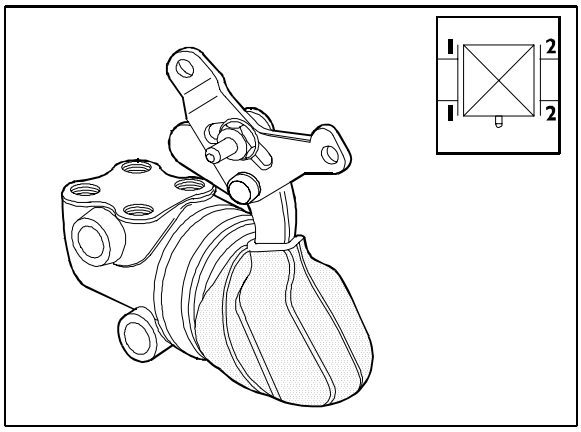

The load sensing valve automatically regulates the braking torque generated by the brakes of the rear axle according to the load weighing on the rear axle.
It has the important function, especially when the vehicle has no load, of limiting the braking torque that would lock the rear wheels causing the vehicle to skid.

Figure 41

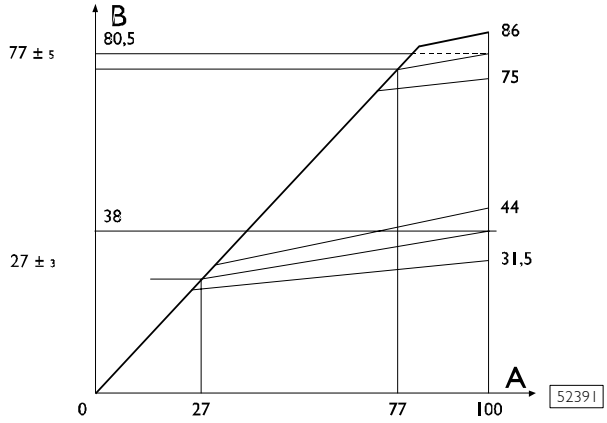

A. Inlet pressure (in bar) - B. Outlet pressure (in bar)
Ratio = 0.15

Adjusting the load sensing valve

This adjustment is similar to that described above, using the following loads.

TABLE OF LOADS FOR ADJUSTING THE LOAD SENSING VALVE

Model	Load (A) kg	Load (B) kg
29L	9	1500
35S	6,5	1500

ANTI-SKID DEVICES

The following devices are integrated in a single system with a single control unit.

Antilock braking system (ABS)

This system comprises an electro-hydraulic modulator and an electronic control unit mounted on the modulator, located in the engine bay, four sensors and four phonic wheels that measure the number of turns of the wheels.

The tendency for one or more wheels, whether front or rear, to lock, which is detected by the sensors through the pulses of the phonic wheels, is communicated to the electronic control unit that, by means of the electro-hydraulic modulator, independently or simultaneously regulates the pressure in the hydraulic circuit of the front and rear axles.

Electronic braking distribution device (EBD)

This system acts at a level prior to ABS operation. It ensures a sensitive control over the tendency of the rear wheels to lock with respect to the front ones, when braking, by optimizing the braking force in the different conditions of load, travel and state of use of the vehicle.

This device substitutes the function of the mechanically operated load sensing valve. If this device fails, braking takes place with the same pressure on front and rear brakes.

Anti-skid braking device (ABD)

This system acts by automatically braking the wheels that on starting tend to skid.

It operates with speeds up to 40 km/h.

526716 Electro-hydraulic control unit/modulator

Vehicles 29L - 35S

Figure 42

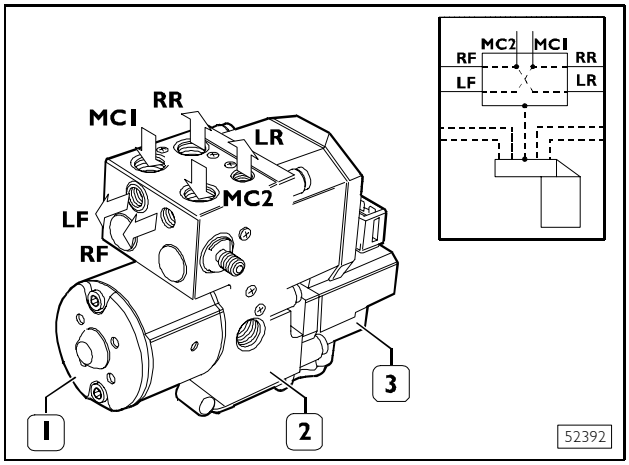

Vehicles 35C - 40C - 45C - 50C - 60C - 65C

Figure 43

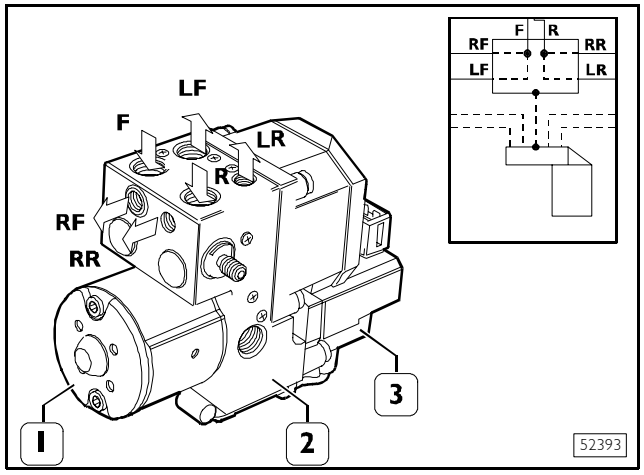

1. Hydraulic accumulator - 2. Electro-hydraulic modulator - 3. Electronic control unit

The electronic control unit has the task of controlling the electro-hydraulic modulator solenoid valves according to the signals from the wheel speed sensors.
The electro-hydraulic modulator modulates the pressure of the brake fluid in both front and rear circuits according to the control signals from the control unit.

The devices comprising the control unit and electro-hydraulic modulator of the various models are not interchangeable.

526713 Rev sensor
566712 Phonic wheels

Figure 44

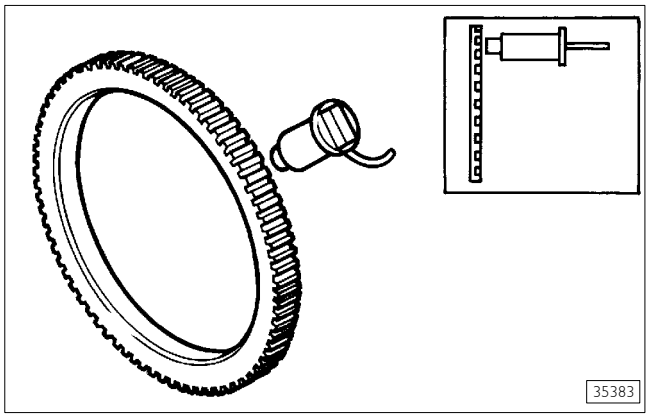

The system for measuring the speed of rotation of the wheels is composed of the wheel speed sensor and the phonic wheel. The phonic wheel is housed or incorporated in the brake disc of the wheel and turns at the same speed as the wheel. By induction in the sensors it generates alternating voltages whose frequency is in proportion to the speed of rotation of the respective wheel. These voltage signals are transmitted to the control unit for processing.

5274 BRAKE REPAIRS

Front brakes

The following operations have been carried out on vehicles with 2x44 Brembo front calipers.

They should be considered similar also for 2x42 - 2x52 Brembo front calipers unless stated otherwise.

527417 Replacing brake linings

The braking system effects safety. All repairs and servicing operations must be exclusively carried out by skilled, qualified personnel.

The oil inlet hose to the calliper must not be disconnected during the operations that follow.

Figure 45

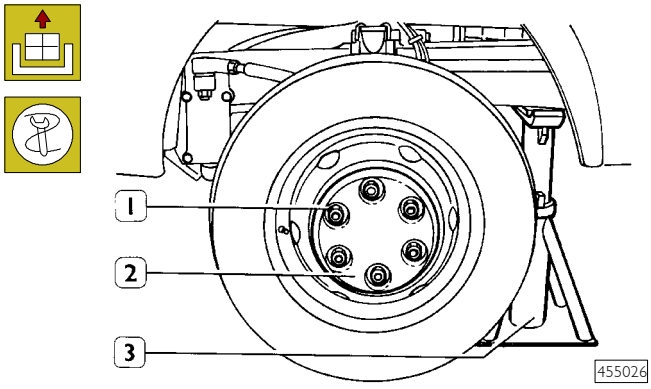

Set the vehicle on level ground and lock the rear wheels. Loosen the nuts (1) securing the front wheels. Lift the front of the vehicle with a hydraulic lift and rest it on two stands (3).

Unscrew the nuts (1), take off the cover (2) and remove the wheel.

For 2x42 calipers

Figure 46

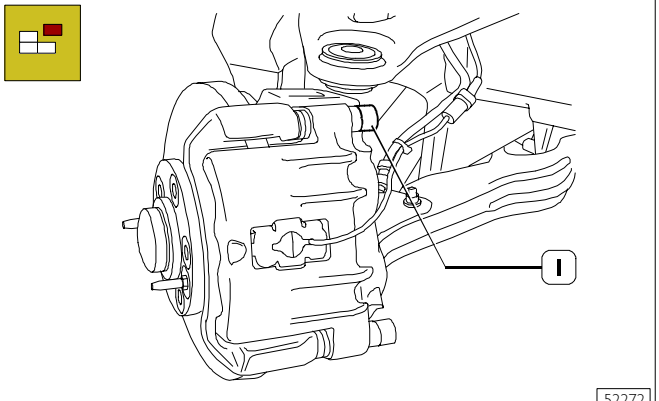

Remove the protective rubber plug (1).

Figure 47

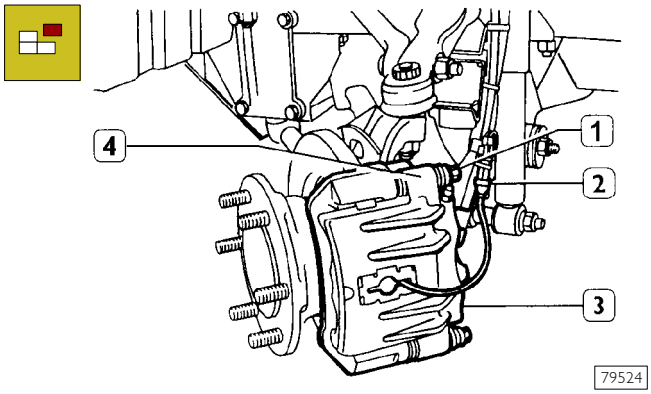

Disconnect the wear sensor connection (2). Loosen the screw (1). Remove the bushing (4) by using a screwdriver as a lever. Remove the calliper body (3) from the support by making it turn on the other bushing to extract the brake pads.

Figure 48

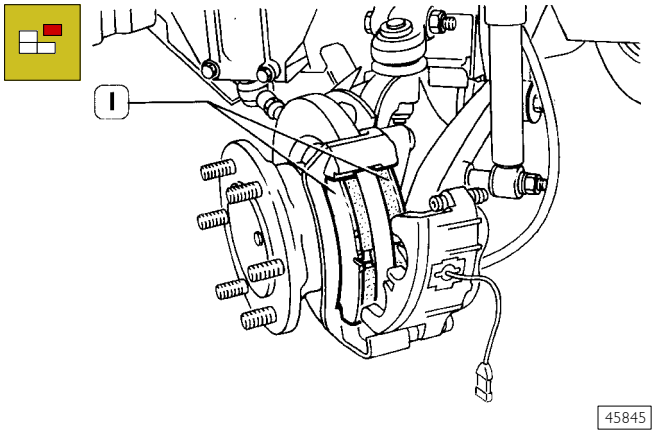

Remove the brake linings (1).

Figure 49

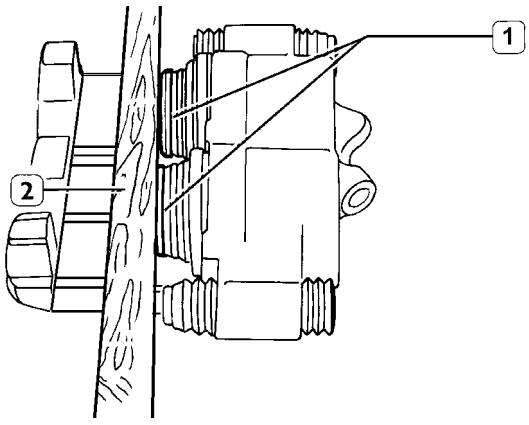

Retracting the pistons will increase the level of brake fluid in the reservoir. For this reason, check the fluid does not spill out of the reservoir and damage vehicle paintwork during the operation.

Use a retractor or other suitable device (2) to retract the pistons (1).

Be careful not to damage the surface of the pistons and the protective boots in contact with the tool.

Clean the pad resting surface with suitable materials and products (e.g. with a damp cloth). Avoid using nitro thinner or petrol, etc., which could damage protective boots.

Inspect the state of the dust caps. If they are out of shape or broken, it is necessary to replace them. Remove the dirt from the brake caliper with a wire brush, without damaging the dust caps. Check the surfaces of the brake disc and make sure there is no corrosion or scoring. Small surface cracks are acceptable, but it is then necessary to grind the brake disc as described under the relevant heading. Replace worn brake discs.

We suggest that both brake discs be renewed also in case one of them only needs to be replaced. As regards brake lining pairs, always replace a complete series for each axle.

Always overhaul both brake calipers also in case one of them only seems to be damaged.

Figure 50

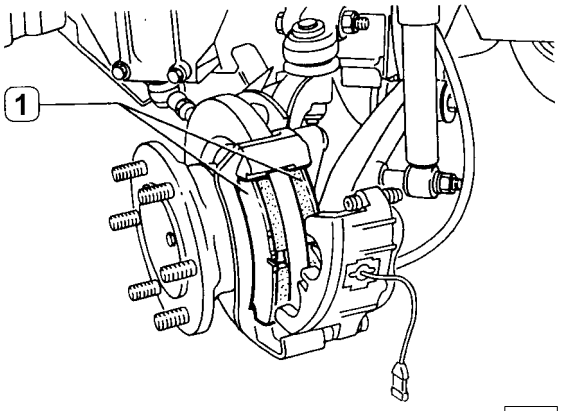

79526

Insert new brake liners (1) in the brake calliper mount and check that they slide in their seats.

Figure 51

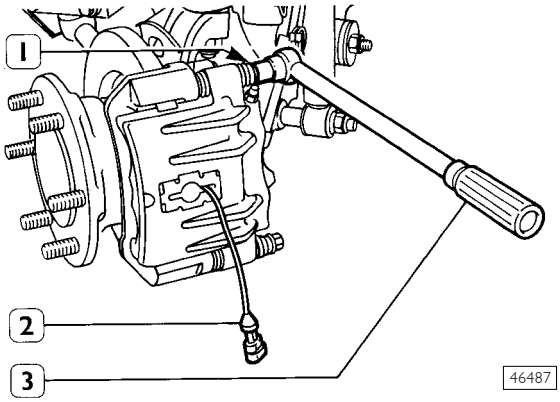

46487

Use a torque wrench (3) to tighten the screws (1) at the specific torque.

Connect the wear sensor connection (2).

Every time the screw (1) is removed, it must be replaced.

For 2x42 calipers

Figure 52

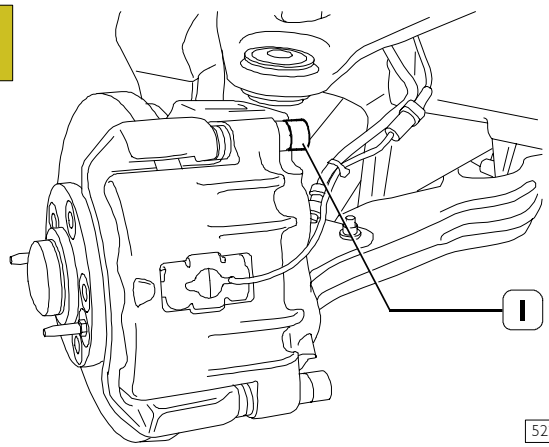

52272

Fit on the protective rubber plug (1).

527413 Brake caliper removal and refitting

Removal

For 2x42 calipers

Figure 53

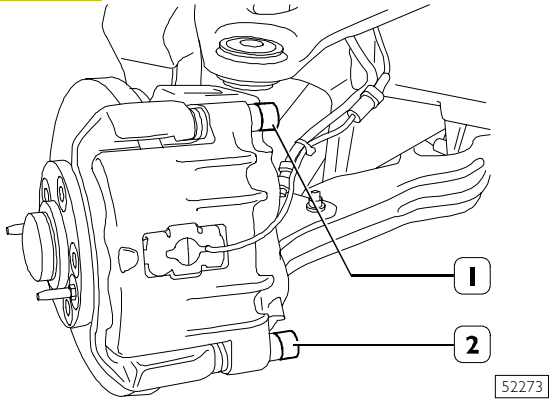

52273

Remove the protective rubber plugs (1 and 2).

For all brake calipers

Figure 54

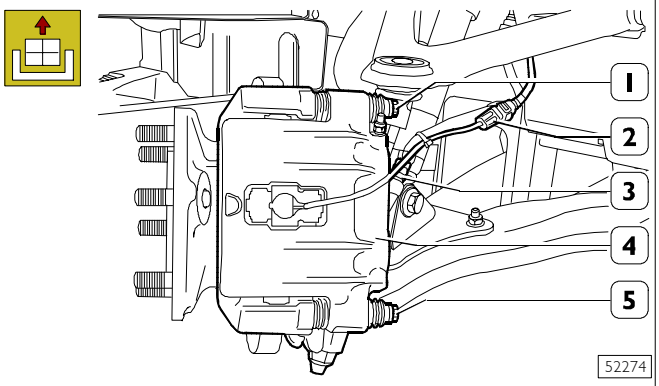

Disconnect the lining wear sensor electrical connection (2).
Disconnect the pipe (3) from the caliper (4) and drain off the brake fluid.
Unscrew the screws (1 and 5) and remove the brake caliper (4).

Refitting

Check the pistons are fully retracted inside the caliper body.

Refit by carrying out the operations described for removal in reverse order, observing the required tightening torques.

Every time the screws (1 and 5, Figure 54) are removed, they must be replaced.

Drive slowly without prolonged, sudden brake application during the first period of use of new brake pads because braking efficiency is reduced.

Press the brake pedal repeatedly to restore pressure in the system and correct brake pedal stroke.

527440 REAR BRAKES

The following operations have been carried out on vehicles with 2x44 and 2x46 Brembo rear calipers.
They should be considered similar also for 1x52 Brembo rear calipers unless stated otherwise.

527447 Replacing brake linings

Figure 55

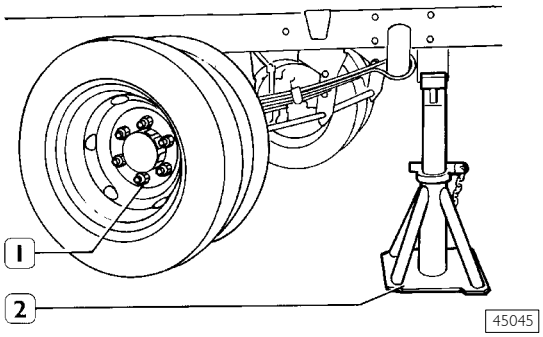

Set the vehicle on level ground, loosen the nuts (1) securing the wheels.
Lift the front of the vehicle with a hydraulic lift and rest it on two stands (2).
Unscrew the nuts (1) and remove the wheels.

For 1x52 calipers

Figure 56

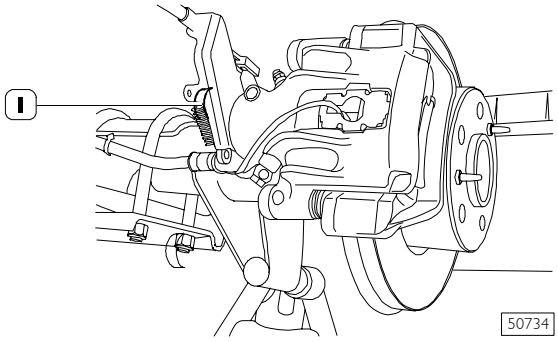

Remove the protective rubber plug (1).

For all brake calipers

Figure 57

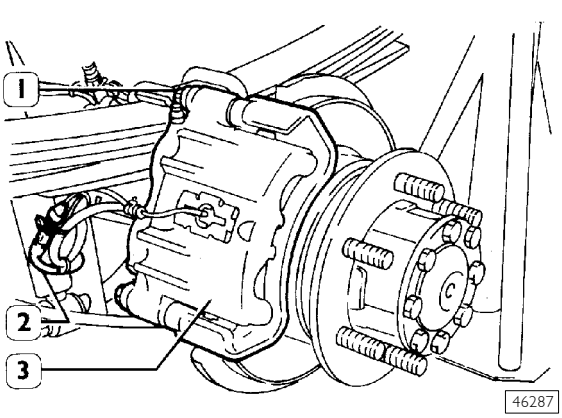

Disconnect the wear sensor connection (2). Unscrew the screws (1) and turn the brake caliper (3) over.

If the liners are replaced in vehicles with leaf spring suspensions, extract both bushings and entirely separate the calliper body from the mount.

Figure 58

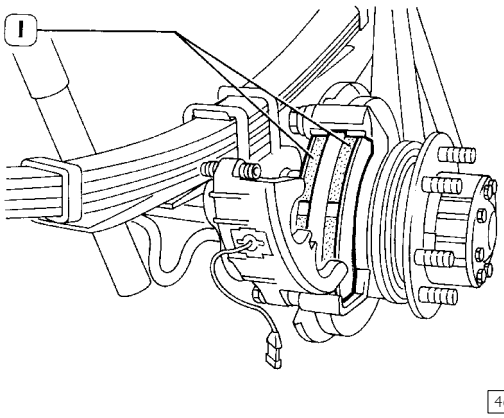

Remove the brake linings (1).

Retract the pistons are shown in Figure 49.

Inspect the state of the dust caps. If they are out of shape or broken, it is necessary to replace them.

Remove the dirt from the brake caliper with a wire brush, without damaging the dust caps.

Clean the pad resting surface with suitable materials and products (e.g. with a damp cloth). Avoid using nitro thinner or petrol, etc., which could damage protective boots.

Check the surfaces of the brake disc and make sure there is no corrosion or scoring. Small surface cracks are acceptable, but it is then necessary to grind the brake disc as described under the relevant heading. Replace worn brake discs.

We suggest that both brake discs be renewed also in case one of them only needs to be replaced. As regards brake lining pairs, always replace a complete series for each axle.

Always overhaul both brake calipers also in case one of them only seems to be damaged.

Figure 59

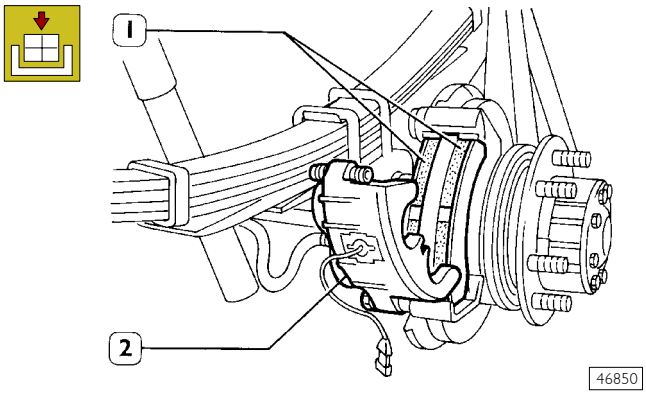

Fit the new linings (1) to the brake caliper mounting. Ensure linings are free to slide in their seats.

Push brake caliper pistons (2) as far as they can go. Then position the caliper on the brake linings.

For 1x52 calipers

Figure 60

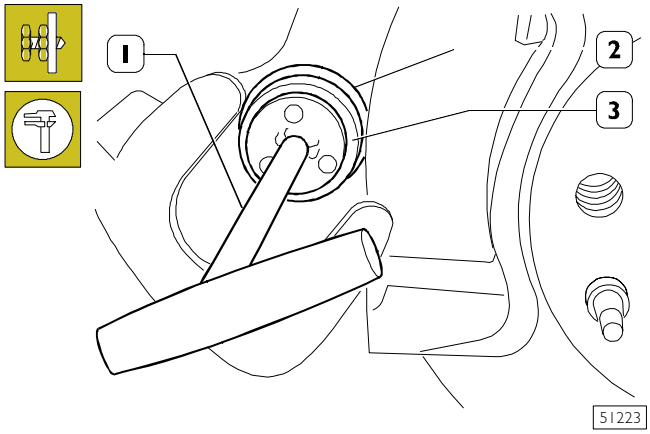

Using tool 99372236 (1) retract the piston (3) by pushing constantly in line with the piston axis with a force of approx. 300 ÷ 400 N while turning the tool clockwise until the piston (3) is fully retracted.

During this operation, take care not to twist the protective cap (2) or let it swell out.

Let the air out of the cap by moving it away from the brake caliper.

For all brake callipers

Figure 61

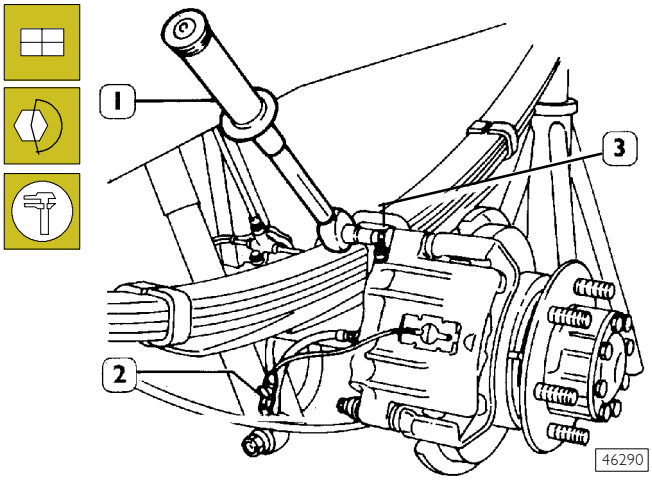

Tighten the screw (3) to the required torque with a torque wrench (1).

Connect the wear sensor connection (2).

Every time the screw (3) is removed, it must be replaced.

For 1x52 calipers

Figure 62

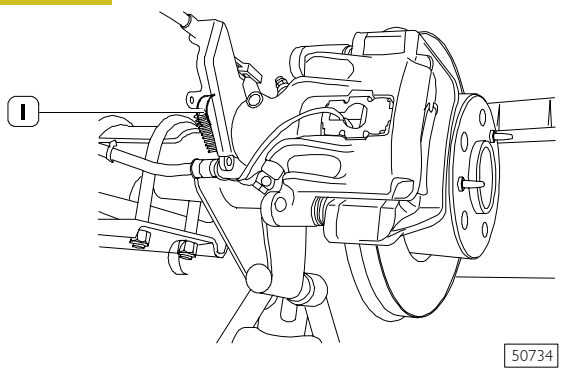

Fit on the protective rubber plug (1).

For all brake callipers

Drive slowly without prolonged, sudden brake application during the first period of use of new brake pads because braking efficiency is reduced.

Press the brake pedal repeatedly to restore pressure in the system and correct brake pedal stroke.

527443 Brake caliper removal and refitting

Removal

For 1x52 calipers

Figure 63

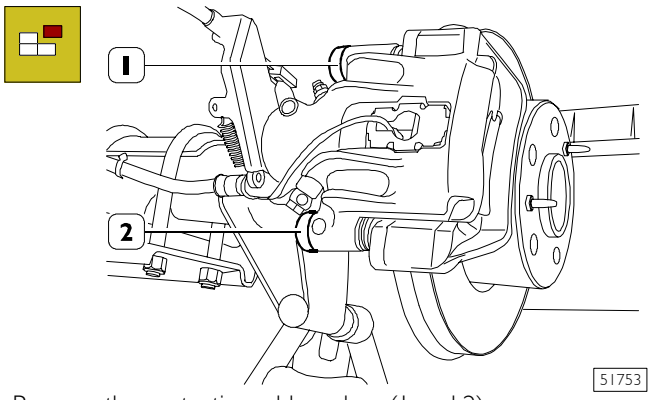

Remove the protective rubber plugs (1 and 2).

For all brake calipers

Figure 64

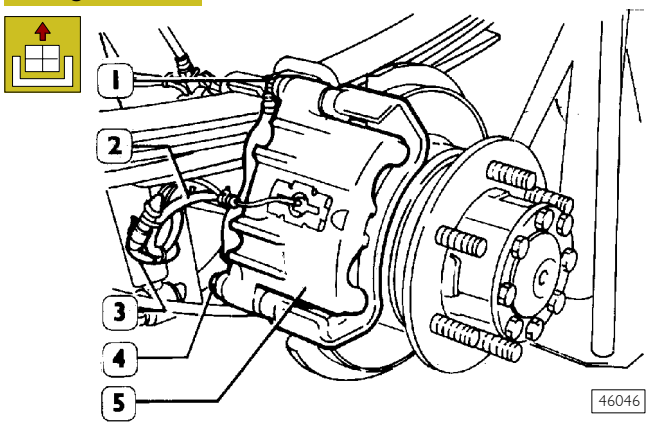

Disconnect brake shoe wear sensor electrical connection (3). Disconnect the calliper (5) hose (2) from the pipe with a suitable tool (cap the pipe to prevent leakage of brake fluid). Loosen the screws (1 and 4) and remove the brake calliper (5).

Remove the hose at the bench.

For 1x52 calipers

Figure 65

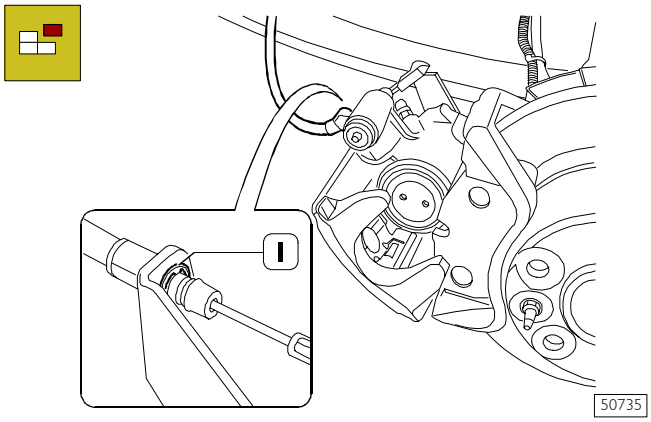

Remove the retaining clip (1) and unhook the parking brake rope.

Removal

Refit by carrying out the operations described for removal in reverse order, observing the required tightening torques.

Replace the hose if anomalies are found.

Every time the screws (1 and 4, Figure 64) are removed, they must be replaced.

527413 OVERHAUL OF BRAKE CALIPERS 2x42 - 2x44 - 2x46 - 2x52 Brembo brake calipers

Disassembly

Figure 66

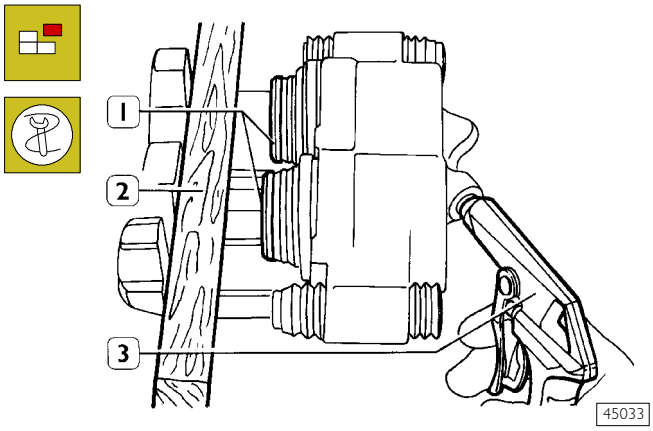

Place the caliper on a work bench. Insert a block of wood (2) so that the pistons can be removed without damaging them, and to make the operations safe for the technician.

By means of a gun (3), introduce air into the brake caliper the pistons (1) are extracted.

Remove the dust boots from the respective seats.

Figure 67

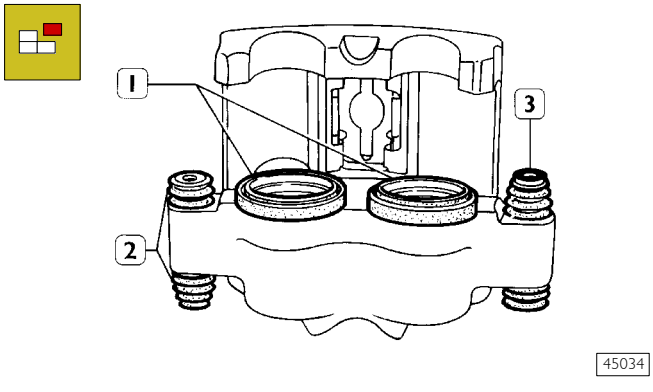

Remove the dust covers (1 and 2) and keep the sliding bushes (3).

Figure 68

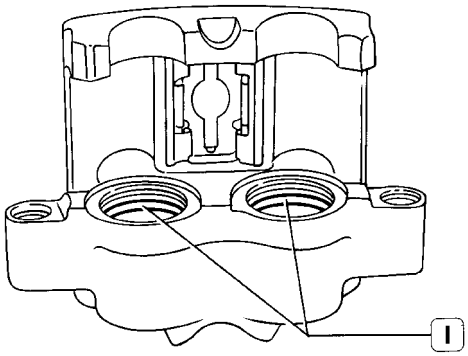

Remove the seal rings (1) from the brake caliper cylinder seats.

Cleaning and checking of main components
For all types of brake calipers

When washing the metal components use hot water with Fiat LCD type detergent.

By means of a metal brush, remove any dirt from the brake caliper, then eliminate any residual dirt with the use of a brush. Carefully clean the seats of the guide pins, sliding bushes, pistons and the pistons themselves.

By means of a suitably sized synthetic brush, remove all traces of grease from the seats of the sliding bushes. Open the bleeder valves, then carefully blow compressed air into the brake caliper casing.

By means of a piece of canvas soaked in methylated spirits or similar, carefully clean the sliding surfaces.

Check the wear on the sliding bushes, pistons and relevant seats on the brake caliper casing. Make sure that the sliding surfaces are neither damaged or worn.

Insert the bushes and pistons into the seats and check that they are free to slide, otherwise restore or replace as necessary.

A regular braking effect depends a great deal on the condition of the sliding surfaces.

Check wear of brake liners and safety springs. Replace the parts which are either deformed or worn.

It is recommended to replace the piston dust covers and seal rings even if they do not show any signs of deformations or defects.

Re-assembly

Lubricate the pistons and seal rings with brake liquid Tutela DOT SPECIAL.

Figure 69

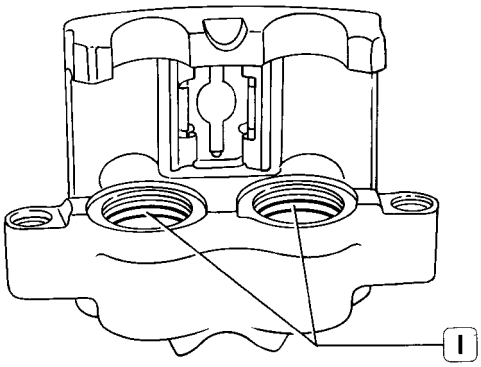

Insert the seal rings (1) into the relevant seats of the caliper casing.

Figure 70

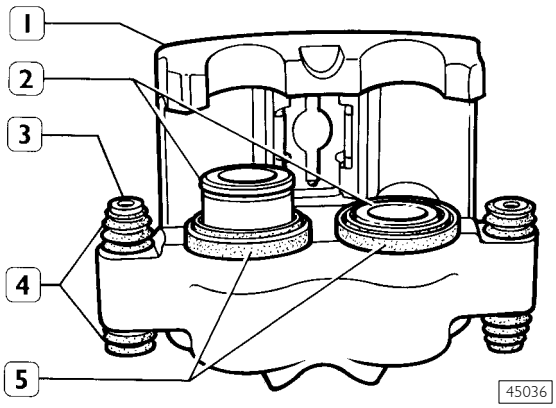

Insert the dust boots (4 and 5) in their seat on the brake calliper (1). Fit the cylinders (2) and the sliding bushings (3) and make sure they slide freely.

Correct sliding if required by lubricating the bushings with Klueber glk1pf grease.

Insert the dust covers into the relevant sears on the pistons (2) and on the sliding bushes (3).

1x52 Brembo brake calipers

The 1x52 callipers (rear, 29 L - 35 S vehicles) are equipped with an automatic brake liner wear tensioner device and the components cannot be removed.
Consequently, replacement/overhauling operations on the piston, dust boot and internal components must only be carried out by specialised personnel.
Only the sliding bushings can be overhauled. The removal/refitting procedure is the same as that described for the other callipers.

527411 OVERHAULING BRAKE DISCS

Figure 71

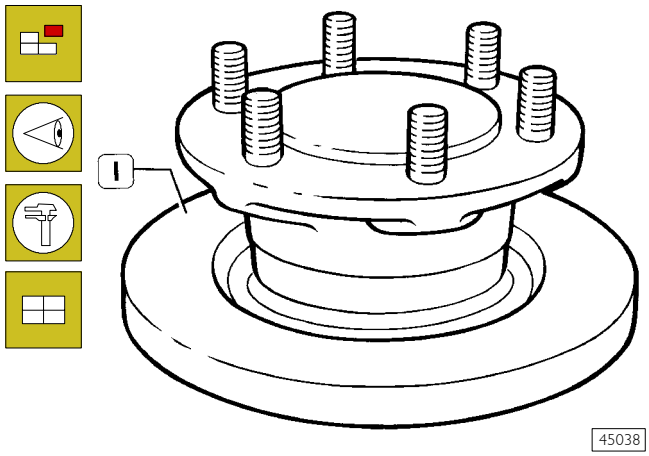

To take down and fit back the brake disk (1) follow the procedures described in the "axles" section.

Check the wear on the surfaces of the drum brakes.

When values different from those indicated in the specifications and data table are found, machine and grind the disk brakes and, if necessary, replace them.

527411 MACHINING AND GRINDING OF DISC BRAKES

Figure 72

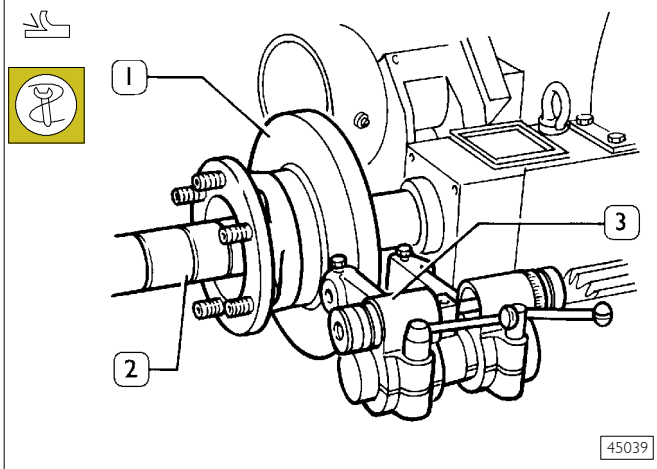

- ❑ Fit the disk brake (1) complete with the wheel-hub to the late arbor 99301005 (2);
- ❑ fit a set of spacers on the shaft to remove unit end play, tighten the lock nut and apply the lathe support;
- ❑ place the tool-holder (3) along the axis of the drum brake (1) then adjust the work depth of the tools;
- ❑ turn down the drum brake (1) by passing over the surface a few times depending on the condition of the surface itself.

Figure 73

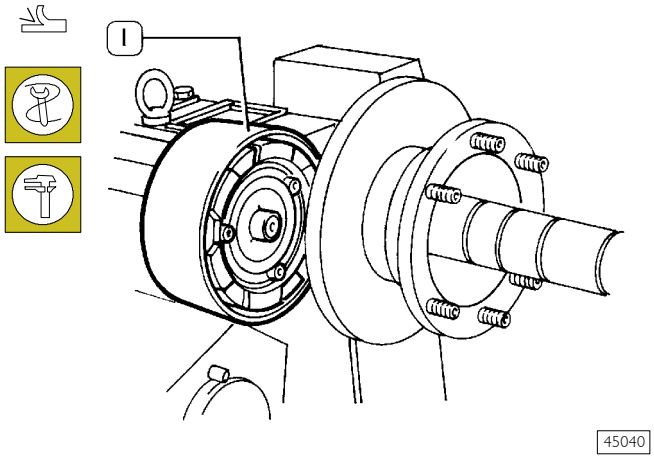

By means of the lathe 99301001 (1), machine both working surfaces of the drum brake.

During this grinding operation, gradually move the sequential wheel towards the working surface in order to completely remove the swarf left over from turning.

WHEEL NUT TIGHTENING SEQUENCE

Figure 74

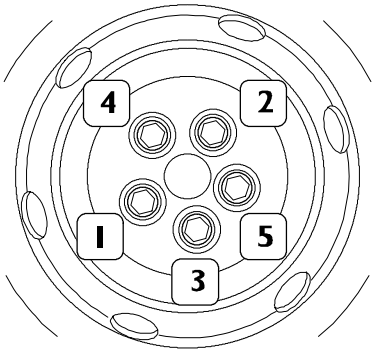

52746

5817 - 450210 AXLE TIGHTENING ORDER

Tighten the screws at the specified torque in the order shown.

Figure 75

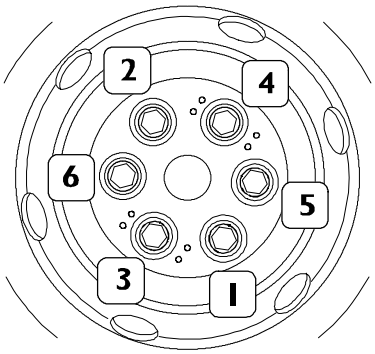

52747

AXLE TIGHTENING ORDER
(EXCEPT FOR 5817 AND 450210)

Tighten the screws at the specified torque in the order shown.

OVERHAULING PARKING BRAKE

Dismantling parking drum brake

Figure 76

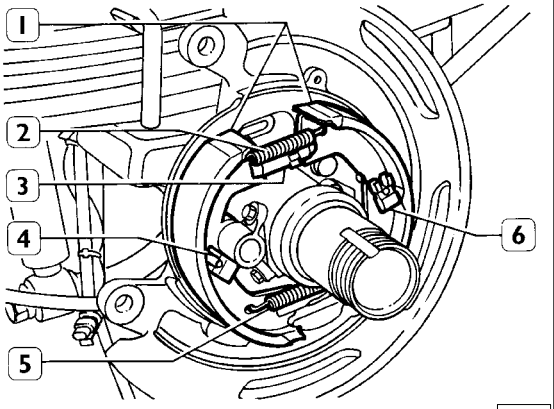

45048

Release shoe (1) return springs (2 and 5). Save the adjusting device (3).

Remove retaining brackets (4 and 6) and detach shoes (1).

Figure 77

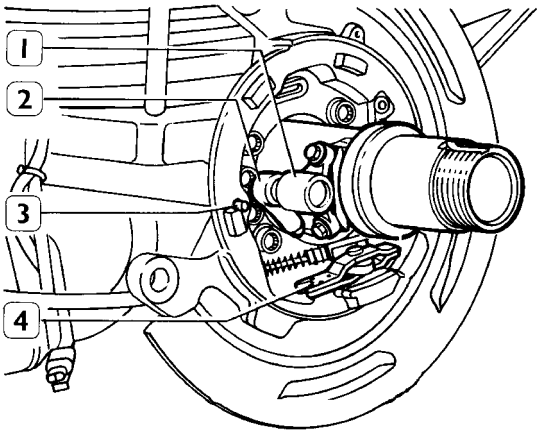

45049

Remove shoe retaining pins (3) and parking brake wire hitching device (4).

Disjoin support (1) and withdraw sensor (2) to remove ABS sensor (2).

To reassemble the sensor (2), push it as far as it will go inside support (1) and fasten the latter to the rear axle.

For models 35C - 40C - 45C - 50C

Figure 78

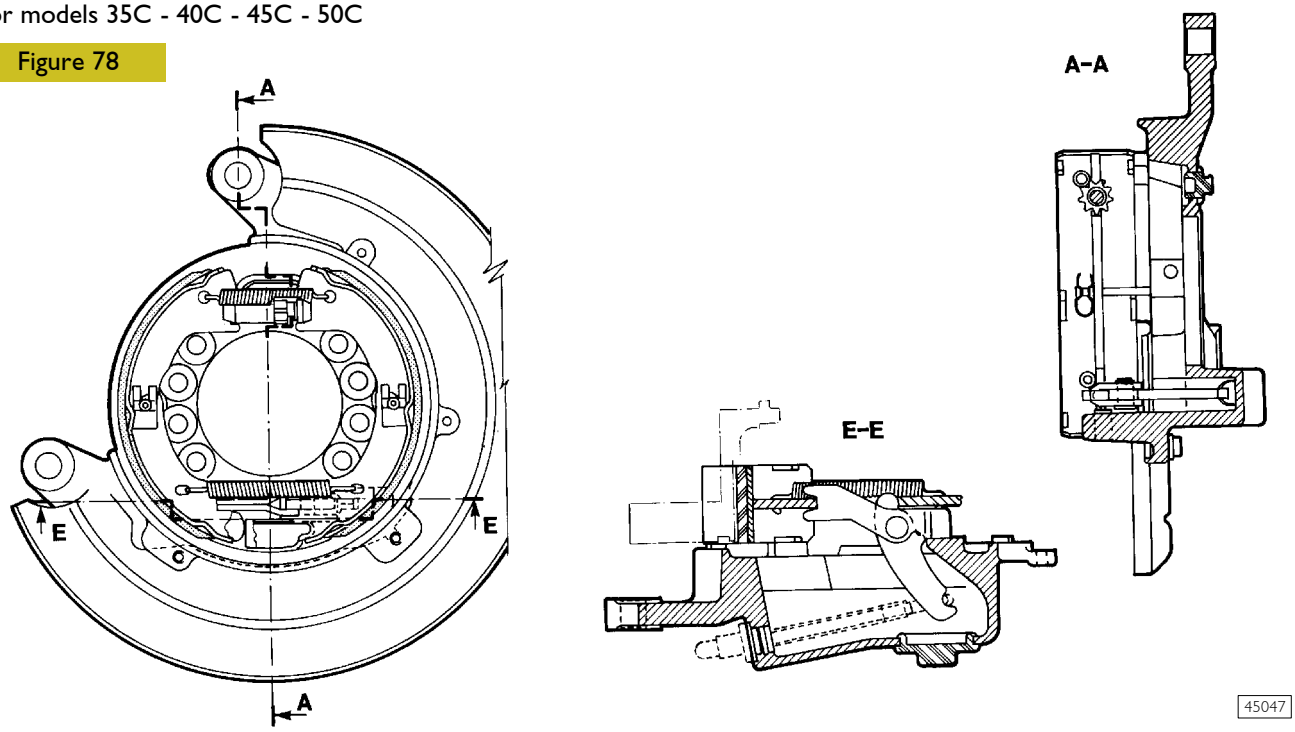

VIEW OF THE PARKING DRUM BRAKE

For models 60C - 65C

Figure 79

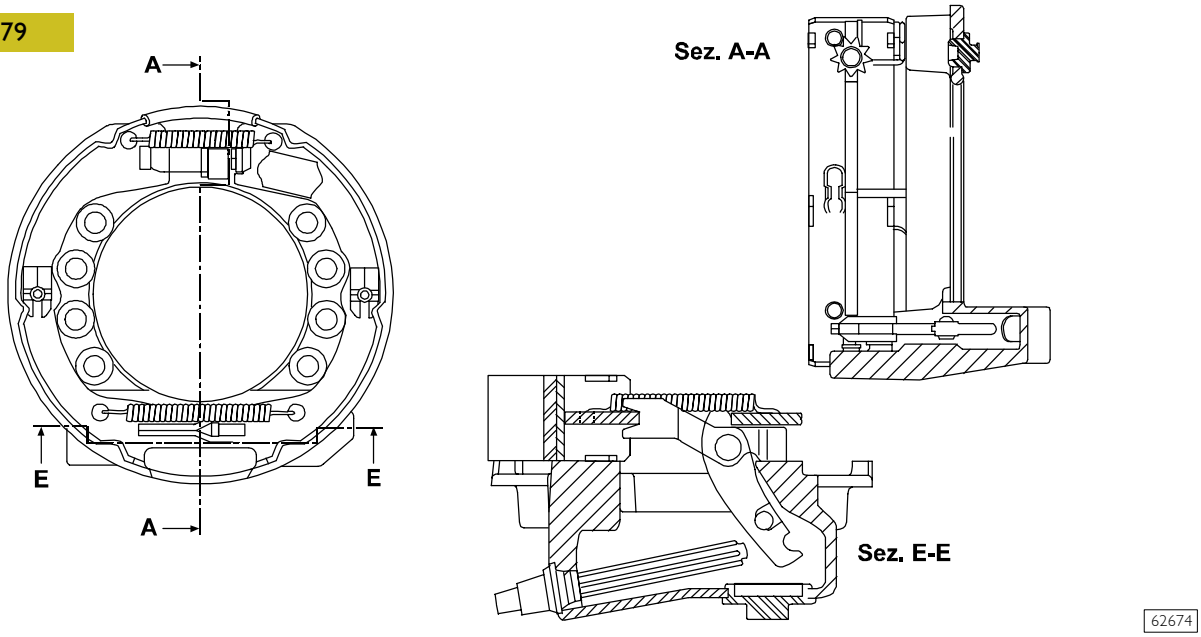

VIEW OF THE PARKING DRUM BRAKE

Check inner disc diameter to establish whether it can be reused.
Measure the inner disc diameter with a sliding gauge without moving the arms to an angle.
Measure the drum diameter in several spots to determine ovality and wear. Also examine depth of scoring on the braking surface.
Max permitted ovality and/or eccentricity tolerance is 0.1 mm.

Replace the disc if wear or evident signs of overheating are found (see specifications and data table).

Check brake jaw conditions and replace if anomalies are found.
If the brake lining surface is oily, trace the cause and repair the fault.
The minimum brake seal thickness is 3.5 mm for models 60C - 65C, and 1.5 mm for models 35C - 40C - 45C - 50C.
If this is not so, even if only slightly above or below the specified value, replace them.
Check serviceability of shoe return springs.

Assembly

Figure 80

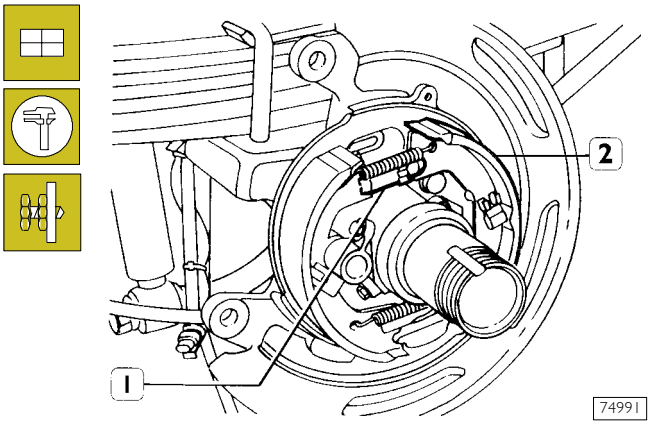

Loosen the tensioner under the chassis in the middle of the vehicle.
Reverse disassembly operations to reassemble.
Using a sliding gauge, measure the diameter of the brake seal (2), check that the values correspond with those indicated on the specifications and data tables, if not, adjust the device (1) until the correct values and data are obtained.

5027 Adjusting parking brake
(vehicles with parking drum brake)

Figure 81

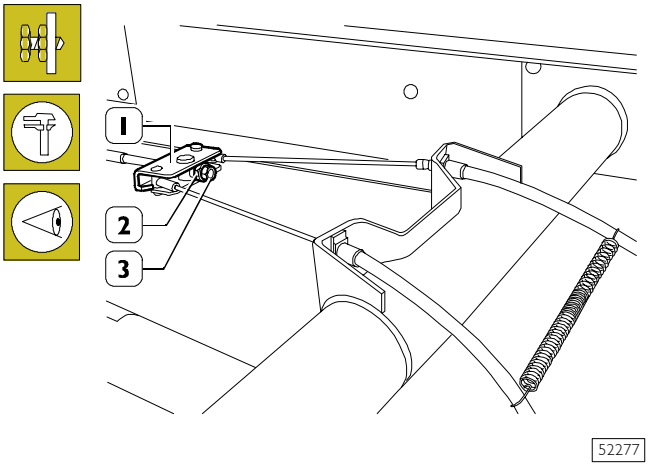

A. Play recovery is not automatic. Minor lever stroke extension (corresponding to approximately 2 notches in addition to the normal lever stroke which is 7 notches) by means of the tensioner (1) as shown below:

- lift the rear of the vehicle, resting the chassis frame on the stands;
- loosen the lock nut (3);
- take the parking brake lever, in the cab, onto its third catch;
- screw down the tightener screw (2) until the rear wheels are hard to turn by hand;
- operate 3-4 times the lever in the cab to set parts, then check whether the stroke is of approx. 6 steps;
- lock the lock nut (3);
- lower the vehicle.

B. For further adjustments, it is necessary to proceed as follows:

Case 1 – With disk removal

- lift the rear of the vehicle, resting the chassis frame on the stands;
- loosen the screw (2) completely;
- remove the disc as described in the "REAR AXLES" section;
- run the checks described on page 61;
- use the adjustment device (1, Figure 80) to obtain the distances given in the "Specifications and Data" table;
- mount the disc and wheels. Firmly apply the parking brake a few times to settle the sheaths of the ropes;
- take the parking brake lever, in the cab, onto its third catch;
- screw down the tightener until the rear wheels are hard to turn by hand;
- lock the tightener lock nut;
- lower the vehicle.

Case 2 – Without removing disks

- lift the rear part of the vehicle resting the chassis on the supporting stands provided for the purpose and remove wheels;
- loosen the lock nut (3);

Figure 82

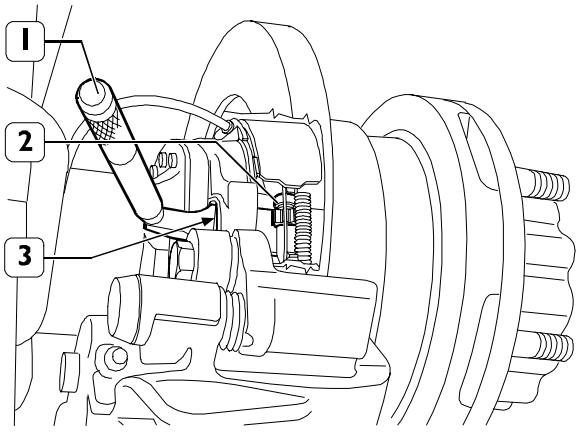

- remove the brake upper slot rubber plug (3);
- use tool 99372249 (1) to operate the manual adjuster internal ring nut (2) and widen the shoes until the disk can no longer be turned using just the hands;
- always with tool 99372249 (1), loosen the above mentioned adjusting ring nut (2) by 3 notches and check whether the disk is free to turn;
- refit the rubber plug into the slot;
- refit rear wheels;
- set the lever in the cab to the third position;
- screw the tightener screw (2, Figure 81) until wheels can no longer be turned using just the hands;
- operate 3-4 times the lever in the cab to set parts, then check whether the stroke is of approx. 6 steps;
- lock tightener lock nut;
- lower the vehicle.



Should new brakes/disks be replaced at the same time, drum brakes are not to be adjusted. Only adjust the main cable tightener since brakes are adjusted yet to the rated installation value.

Vehicles with parking brake on brake disc

Clearance recovery is automatic, but if the ropes are removed or replaced it is necessary to adjust their length in accordance with points A and B.

SECTION 12

5501 Bodywork
5001 Chassis Frame
5532 Cab air-conditioning



For bodywork and chassis frame see publication No. 603.43.170.

Page

SAFETY STANDARDS TO OBSERVE WHEN WORKING ON VEHICLES EQUIPPED WITH THE AIR-BAG SYSTEM 5

CAB AIR-CONDITIONING 5

❑ General 5

VENTILATION 5

❑ Description 5

AIR-CONDITIONING SYSTEM MAIN COMPONENTS AND FUNCTIONAL DIAGRAM 6

AIR-CONDITIONING AND HEATING 6

❑ Description 6

❑ Air-conditioning 6

❑ Heating 6

AUTOMATIC AIR-CONDITIONING/HEATING . 7

❑ Description 7

MAIN COMPONENTS 8

❑ Compressor 8

❑ Condenser 8

❑ Drier filter 8

❑ Expansion valve 9

❑ Evaporator 9

CONTROL AND SAFETY DEVICES 10

❑ Description 10

❑ Three-level pressure switch 10

❑ Outside air temperature sensor 10

"M. MARELLI" TYPE HEATER/AIR-CONDITIONER UNIT 11

	Page
❑ General	11
❑ Electronic control unit	11
AIR-CONDITIONING SYSTEM CONTROLS AND LOCATION OF VENTS	12
HEATER/AIR-CONDITIONER UNIT	13
❑ Removal and Refitting	13
❑ Removal	13
❑ Refitting	14
"M. MARELLI" TYPE HEATER/AIR-CONDITIONER UNIT	15
❑ Components	15
PROCEDURE FOR EMPTYING AND REFILLING THE AIR-CONDITIONING SYSTEMS WITH R134A REFRIGERANT	17
❑ R134A refrigerant recovery and refilling station (99305146)	17
CONTROL FASCIA	18
SAFETY STANDARDS	20
OPERATION FLOW CHART	21
RECOVERING REFRIGERANT FROM THE VEHICLE SYSTEM	22
CREATING A VACUUM IN THE SYSTEM	24
RESTORING OIL IN THE SYSTEM	26
FILLING THE SYSTEM WITH REFRIGERANT	27
CHECKING THE PRESSURES IN THE SYSTEM	29
OPERATIONS PRIOR TO DISCONNECTING THE STATION FROM THE SYSTEM	29
LEAK FINDER FOR AIR-CONDITIONING SYSTEMS WITH HFC R134A (9905147)	29
REPAIRS	30
❑ Air-conditioner unit control unit	30
❑ Removal - Refitting	30
❑ Removal	30
❑ Refitting	30
ELECTRONIC CONTROLLER	30
❑ Removal - Refitting	30
❑ Removal	30
❑ Refitting	30

	Page
ANTI-FROST SENSOR	30
❑ Removal - Refitting	30
❑ Removal	30
❑ Refitting	30
ELECTRIC FAN	31
❑ Removal - Refitting	31
❑ Removal	31
❑ Refitting	31
HEATER RADIATOR	31
❑ Removal - Refitting	31
❑ Removal	31
❑ Refitting	31
MIXING ACTIVATOR	31
❑ Removal - Refitting	31
❑ Removal	31
❑ Refitting	31
AIR INTAKE ACTUATOR	32
❑ Removal - Refitting	32
❑ Removal	32
❑ Refitting	32
TREATED AIR SENSOR	32
❑ Removal - Refitting	32
❑ Removal	32
❑ Refitting	32
EVAPORATOR UNIT	33
❑ Removal - Refitting	33
❑ Removal	33
❑ Refitting	33
EXPANSION VALVE AND EVAPORATOR PIPE	34
❑ Removal - Refitting	34
❑ Removal	34
❑ Refitting	34
COMPRESSOR	34
❑ Compressor Removal - Refitting	34
❑ Removal	34

	Page
❑ Refitting	34
POLLEN FILTER	35
❑ Removal - Refitting	35
❑ Removal	35
❑ Refitting	35
THREE-LEVEL PRESSURE SWITCH AND DRIER FILTER	35
❑ Removal - Refitting	35
❑ Removal	35
❑ Refitting	35
CONDENSER	35
❑ Removal - Refitting	35
❑ Removal	35
❑ Refitting	35
DIAGNOSTIC	36
FAILURES OF THE ELECTRIC TYPE (MARELLI AIR-CONDITIONER)	36
❑ Self-diagnosis	36
❑ Diagnosis by error codes	36
❑ Error codes	38
❑ Diagnosis by IWT, MODUS and UNITESTER	39
❑ Diagnosis by IWT	40
FAILURE OF THE MECHANICAL TYPE	44
"MARELLI" TYPE HEATER	47
❑ Removal - Refitting	47
❑ Removal	47
❑ Refitting	47
ELECTRIC FAN	48
❑ Removal - Refitting	48
❑ Removal	48
❑ Refitting	48
HEATER CONTROL CABLES	49
❑ Removal - Refitting	49
❑ Removal	49
❑ Refitting	49

	Page
HEATER UNIT	50
❑ Components	50

SAFETY STANDARDS TO OBSERVE WHEN WORKING ON VEHICLES EQUIPPED WITH THE AIR-BAG SYSTEM

Before doing any work, you MUST observe the SAFETY rules given in section 10 "Steering system"

CAB AIR-CONDITIONING

General

The purpose of the air-conditioning system is to make the cab comfortable as regards the following parameters:

- temperature and relative humidity of outside air;
- temperature and relative humidity in the cab.

The system subjects the air to thermodynamic transformations that affect its temperature, relative humidity and purity. This is accomplished by:

- **Ventilation**, or introducing air taken from the outside (therefore with the temperature and humidity of the surrounding environment) into the cab.
- **Air-conditioning**, or cooling and de-humidifying the air, with the possibility of heating it afterwards as preferred so as to change the temperature and humidity in the cab.

VENTILATION
Description

Ventilation is the function of drawing in fresh air from the outside, cleaned of pollen and dust by a special filter, or recycling the air in the cab.

This system is composed of a shell, designed to house the electric fan unit, air ducts, fresh air intake and recycled air intake. The electric fan has several speeds to draw in and circulate large masses of air.

Figure 1

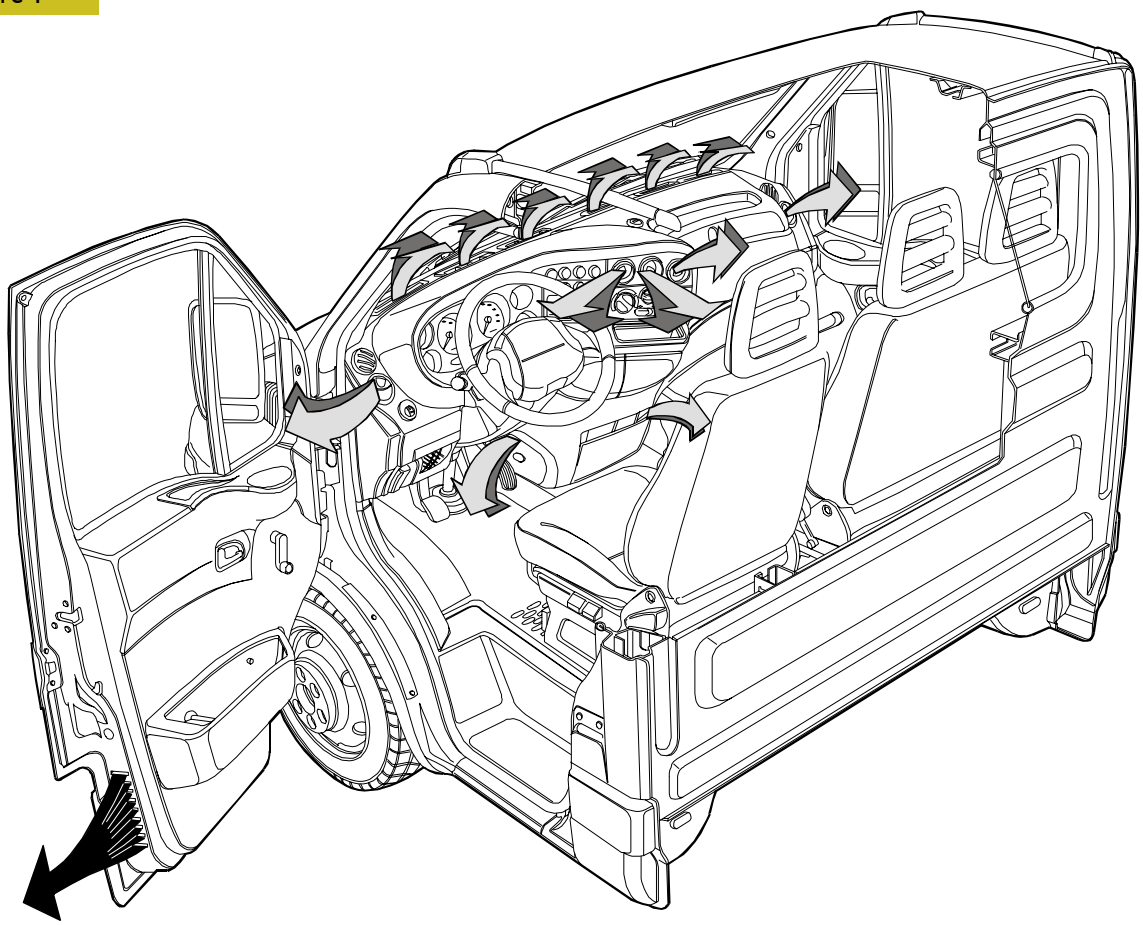

CAB VENTILATION DIAGRAM

AIR-CONDITIONING SYSTEM MAIN COMPONENTS AND FUNCTIONAL DIAGRAM

Figure 2

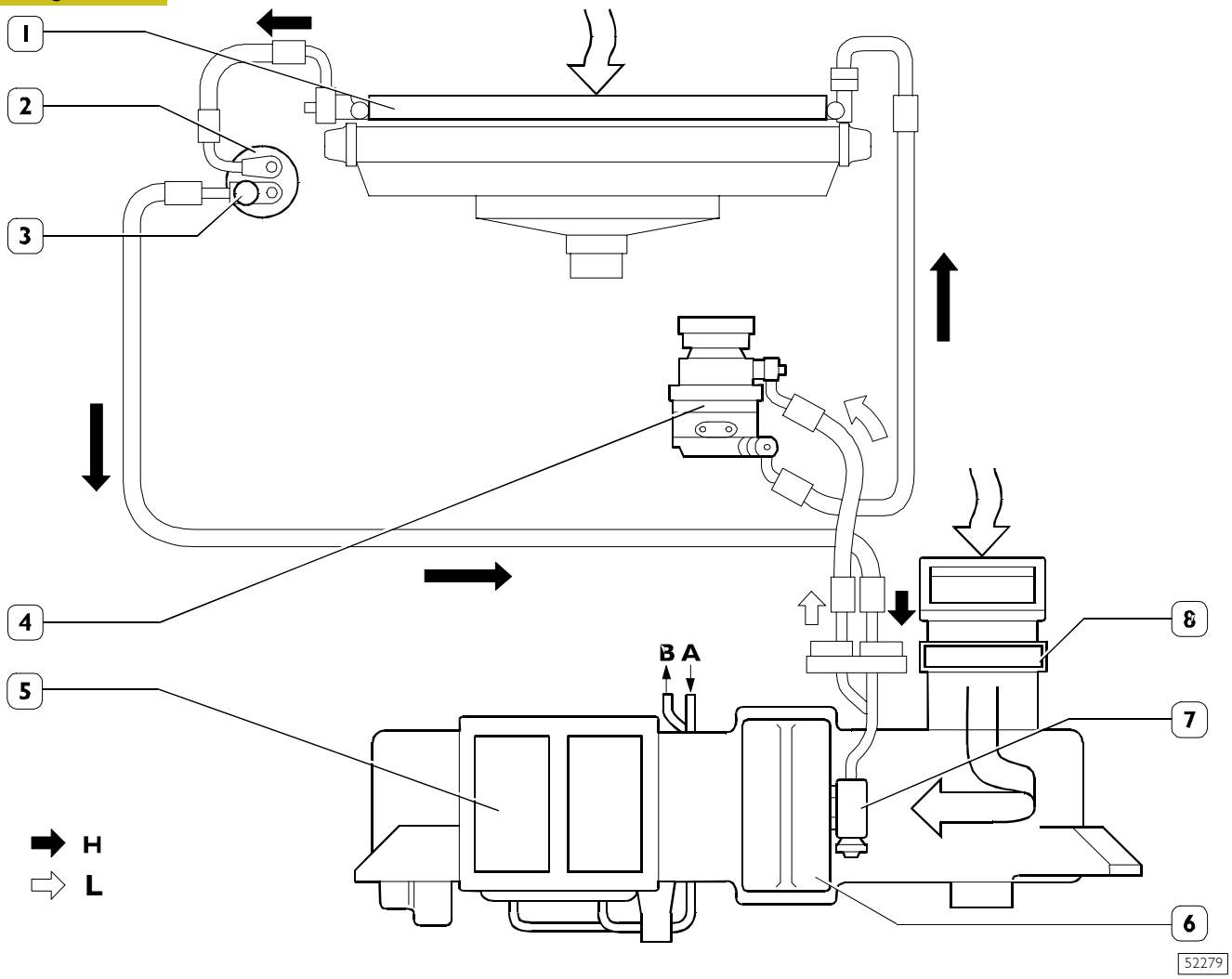

A. Refrigerant liquid inlet - B. Refrigerant liquid outlet - H. High-pressure circuit - L. Low-pressure circuit.

1. Condenser - 2. Three-level pressure switch - 3. Drier filter - 4. Compressors - 5. Heater/fan unit - 6. Evaporator - 7. Expansion valve - 8. Pollen filter.

AIR-CONDITIONING AND HEATING

Description

This is accomplished by integrating an air-conditioning and a heating system.

This integration makes it possible to change the temperature and humidity in the cab.

Air-conditioning

Air-conditioning is accomplished by taking advantage of the high capacity of some gases to lower temperature considerably in their phase of expansion, thereby making it possible to absorb heat from the cab.

This condition is obtained by two different levels of pressure (high, when the refrigerant fluid is in its liquid state, and low, when the fluid is in its gaseous state) that are established and maintained during operation of the system.

Heating

Heating is accomplished by a radiator, in the heater unit, in which the engine coolant circulates.

Special doors allow air to pass through the radiator only when the heating function is activated.

The main components of the air-conditioning and heating system comprise:

- ❑ compressor (4);
- ❑ condenser (1);
- ❑ drier filter (2);
- ❑ three-level pressure switch (3);
- ❑ expansion valve (7);
- ❑ evaporator (6);
- ❑ heater/fan unit (5);
- ❑ pollen filter (8).

AUTOMATIC AIR-CONDITIONING/HEATING

Description

The automatic air-conditioning/heating system is controlled by an electronic control unit that governs the air-conditioning and heating functions so as to obtain and maintain the required conditions in as stable a manner as possible.

The following figure illustrates the vehicle layout of the main components of the automatic air-conditioning/heating system and the layout of the contactors and fuses on the fuse/contactor-holder unit.

Figure 3

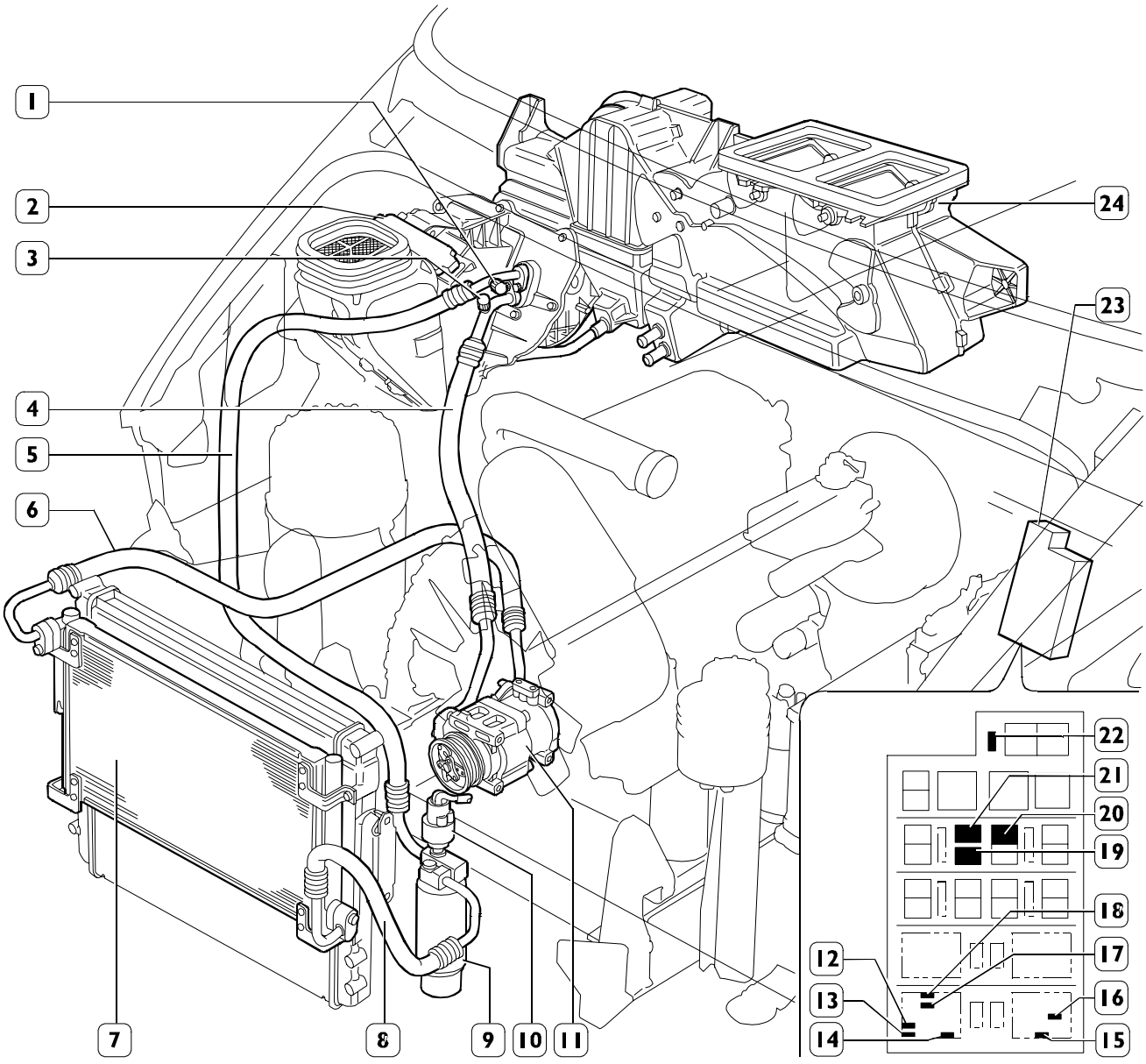

1. Air-conditioning system filler coupling (high pressure) - 2. Pollen filter - 3. Air-conditioning system drainage coupling (low pressure) - 4. Low-pressure pipe - 5. High-pressure pipe - 6. High-pressure pipe - 7. Condenser - 8. High-pressure pipe - 9. Drier filter - 10. Three-level pressure switch - 11. Compressor - 12. 5A fuse (air-conditioner/heater) - 13. 5A fuse (engine electronic control unit) - 14. 5A fuse (miscellaneous lighting) - 15. 30A fuse (cab heater) - 16. 10A fuse (engine electronic control unit) - 17. 3A fuse (air-conditioner) - 18. 3A fuse (panel) - 19. Contactor turning off air-conditioner compressor - 20. Contactor turning on air-conditioner compressor - 21. Contactor controlling electromagnetic coupling - 22. 25A fuse (engine electronic control unit) - 23. Fuse/contactor-holder unit - 24. Heater/air-conditioner unit.

MAIN COMPONENTS

553239 Compressor

Figure 4

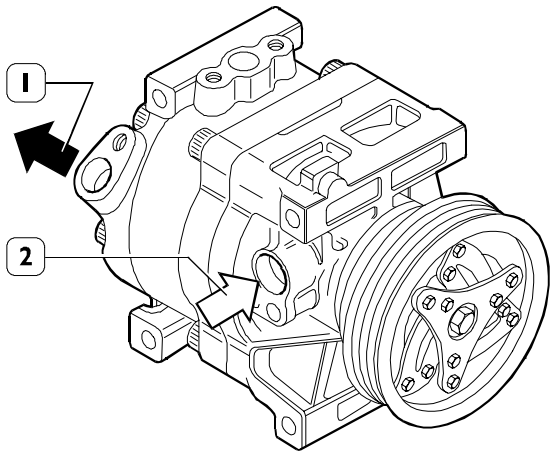

The compressor is located between the evaporator and the condenser. Its function is to:

- ❑ draw refrigerant fluid in the form of vapour at low pressure and low temperature from the evaporator through the inlet (2);
- ❑ compress the refrigerant fluid drawn up and introduce it at high temperature and high pressure into the condenser through the outlet (1).

The compressor is driven by the electromagnetic friction device mounted on the compressor shaft.

Figure 5

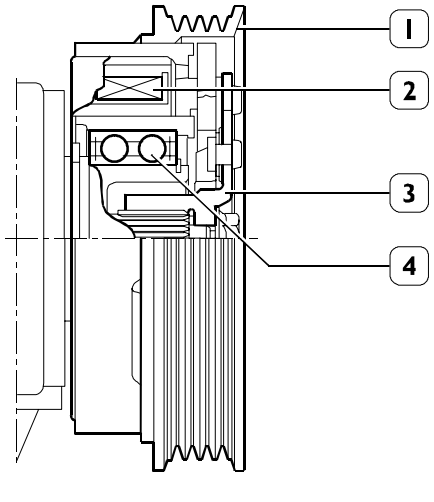

The electromagnetic friction device is composed of an electromagnetic coil (2), a pulley (1) and a front disc (3).

When the system is not running, the pulley (1) turns idle on the bearing (4) since it is driven by the engine via the V-belt.

On switching on the air-conditioning system, the electromagnetic coil (2) attracts the front disc (3) on the pulley (1) that comes to be virtually keyed onto the compressor shaft and makes it rotate.

553232 Condenser

Figure 6

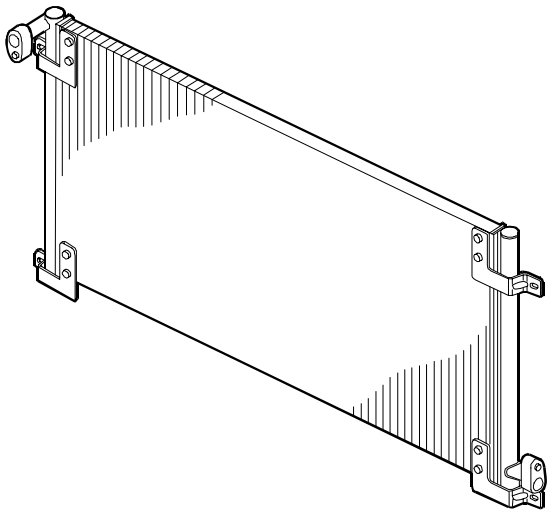

The condenser is a heat exchanger located between the compressor and the drier filter. Its function is to transform the refrigerant fluid from its gaseous to its liquid state.

This transformation is made by the refrigerant fluid releasing heat to the outside air. This is why the condenser is installed on the vehicle so as, in the best conditions, to take advantage of the air stream produced by the forward motion of the vehicle.

When the vehicle is stationary or in a traffic jam, the flow of air needed to transform the refrigerant fluid is produced, under the control of the three-level pressure switch, by the fan for cooling the engine coolant.

553234 Drier filter

Figure 7

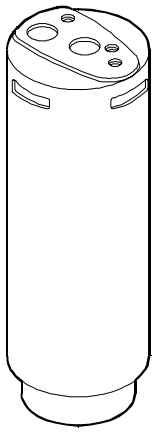

The drier filter is located between the condenser and the expansion valve. It has the following functions:

- ❑ reserve tank for excess refrigerant fluid during variable filling phases;
- ❑ filtering element for the solid particles generated by compressor wear;
- ❑ eliminating the moisture formed in the system.

553233 Expansion valve

Figure 8

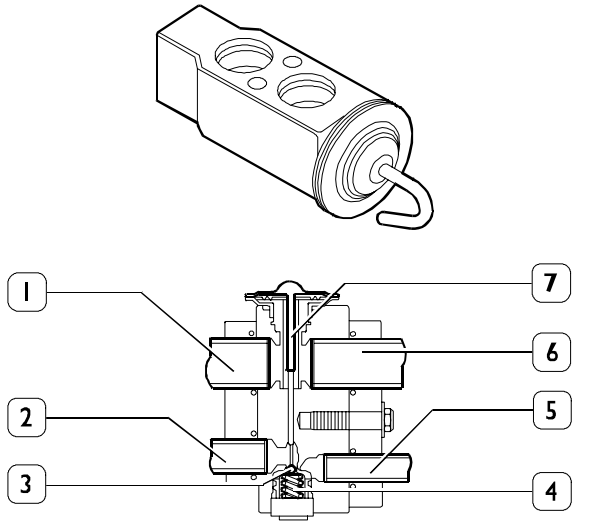

The expansion (block) valve is located between the drier filter and the evaporator.

Its function is to control and proportion the flow of refrigerant fluid to get the highest refrigerating capacity out of the system and to lower the pressure of the refrigerant (at the filter outlet) to a pre-set value so that the fluid, circulating in the evaporator, can be drawn up by the compressor in a completely gaseous form.
This valve has two passages for the refrigerating fluid:

- the bottom one enabling the refrigerant to pass (5) from the drier filter to the evaporator (2). Along this route there is a spring (4) that, appropriately set, makes it possible to obtain such a leap in temperature (overheating) as to make sure that the refrigerant, at the evaporator inlet, is entirely in its gaseous state. In addition, there is also a modulating element, in this case a ball (3) housed in the gauged pipe that controls the flow rate of refrigerant to the evaporator;
- the top one enabling the refrigerant to pass (1) from the evaporator to the compressor (6). Along this route there is a temperature sensor (7) that, depending on the temperature at the evaporator outlet, makes it possible to control the flow rate of refrigerant, by means of the modulating element (3), and control the overheating, by means of the spring (4).

553231 Evaporator

Figure 9

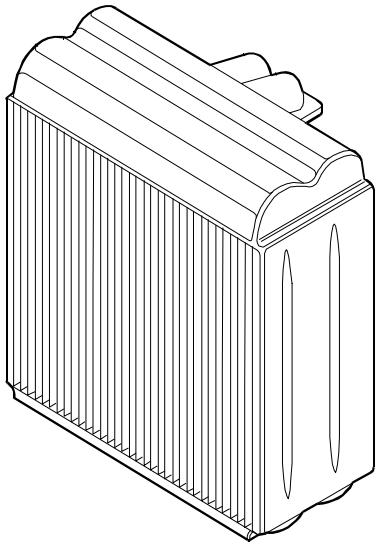

The evaporator is a heat exchanger located between the expansion valve and the compressor.

Its function is to:

- change the state of the refrigerant from a liquid, at the inlet, to a gas, at the outlet;
- absorb the heat in the cab and thereby produce the required refrigerating effect.

To be able to perform these functions, an electric fan draws warm, moist air from the cab and conveys it onto the evaporator.

Since this air is at a higher temperature than the refrigerant, it gives some of its heat to the refrigerant and cools down, while the moisture it contains condenses on the evaporator fins in the form of droplets.

This produces cold, dehumidified air.

This change takes place with considerable heat absorption. A special channel collects the condensation formed and discharges it outside.

The considerable cooling of the radiating pack is due to the change in state, from liquid to gas, of the refrigerant.

CONTROL AND SAFETY DEVICES

Description

The system is equipped with specific devices that, by checking the pressure and temperature, make it possible to protect the system from possible trouble and provide optimal operation.

553235 Three-level pressure switch

Figure 10

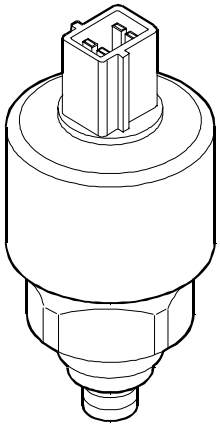

52287

The three-level pressure switch is mounted on the pipe connecting the drier filter to the expansion valves. It has the task of operating the electric fan for the condenser and radiator when the vehicle is stationary or running at low speed, so there is no air stream caused by the forward motion of the vehicle, and it is therefore necessary to activate refrigerant condensation by forced ventilation.

In addition, it has the task of disconnecting the electromagnetic coupling of the compressor pulley when the pressure of the fluid (high pressure side), in spite of the action of the condenser and radiator fan, reaches dangerous limits or when the heating load conditions are not sufficient to make the refrigerant evaporate.

553242 Outside air temperature sensor

Figure 11

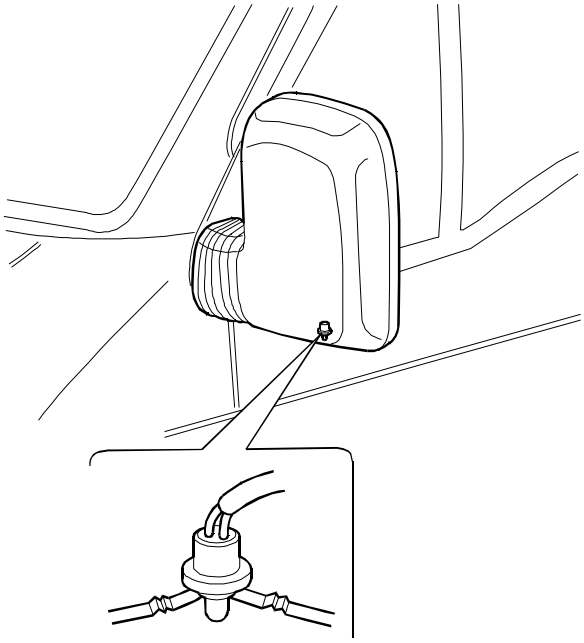

52288

This is mounted on the left-hand external rear-view mirror in the position shown in the figure.

553230 "M. MARELLI" TYPE HEATER/AIR-CONDITIONER UNIT

Figure 12

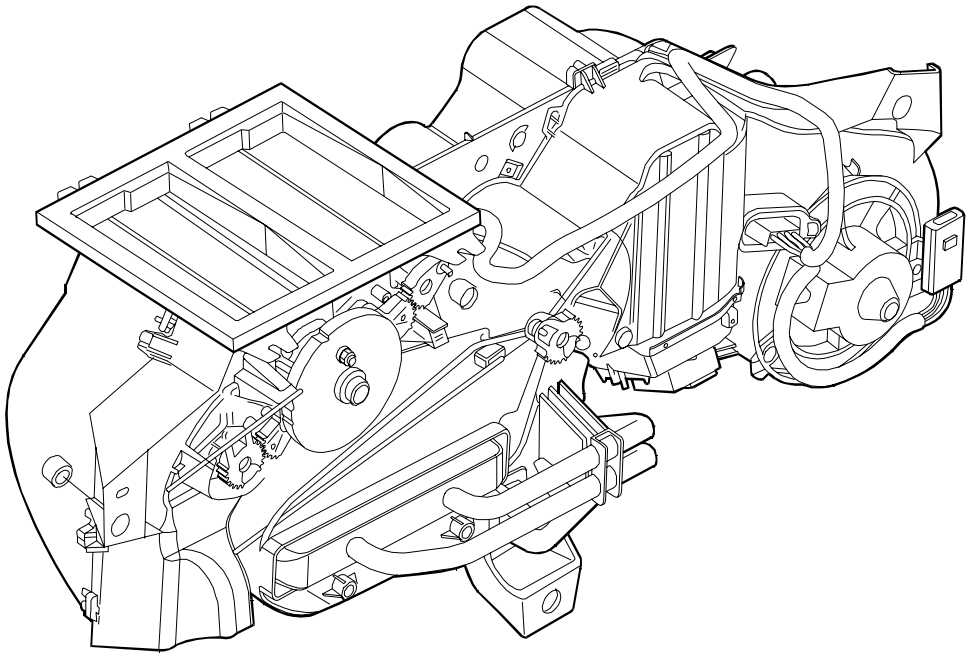

52289

General

A special casing, configured so as to permit insulation, houses the radiator-heater, evaporator, fan unit, internal air (recirculation air) and external air (fresh air) intakes, direction flaps, ducts and vents for the flow of treated air.

This unit has to control the following parameters and functions automatically under the control of the control unit: air temperature at vents, fan speed, air distribution, recirculation, and compressor activation.

The system needs to make provision for the possibility of adjusting the following parameters and functions manually: fan speed on 5 positions, air distributor on 4 positions (5 in automatic mode), recirculation, and compressor activation.

The manual controls have priority over automatic mode and are kept in memory until the user deliberately cancels the command, returning control of the relative function to automatic mode.

If one of the parameters is changed manually, the others remain under automatic control.

The air temperature at the vents is always controlled automatically to produce the temperature shown on the display in the cab (unless the system is not in operation).

553248 Electronic control unit

Figure 13

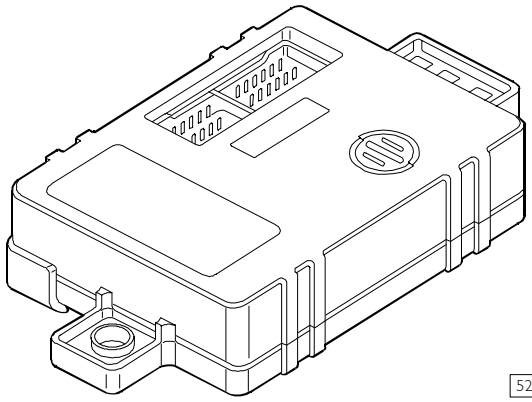

52290

The automatic air-conditioning/heating system is controlled by an electronic control unit that governs both systems (air-conditioning and heating) and determines the mixture and quantity of air to be introduced into the cab to provide the required conditions.

To obtain the required temperature in the cab, the control unit also takes into account the data from the sensor that measures the outside air temperature.

The control unit therefore governs the following functions:

- switching the air-conditioning system on and off;
- using external or recycled air; the hot/cold air mixture;
- the amount of air to introduce into the cab (with the different fan speeds).

Every time the battery is disconnected, when it is reconnected the control unit automatically zeroes the positions.

AIR-CONDITIONING SYSTEM CONTROLS AND LOCATION OF VENTS

Figure 14

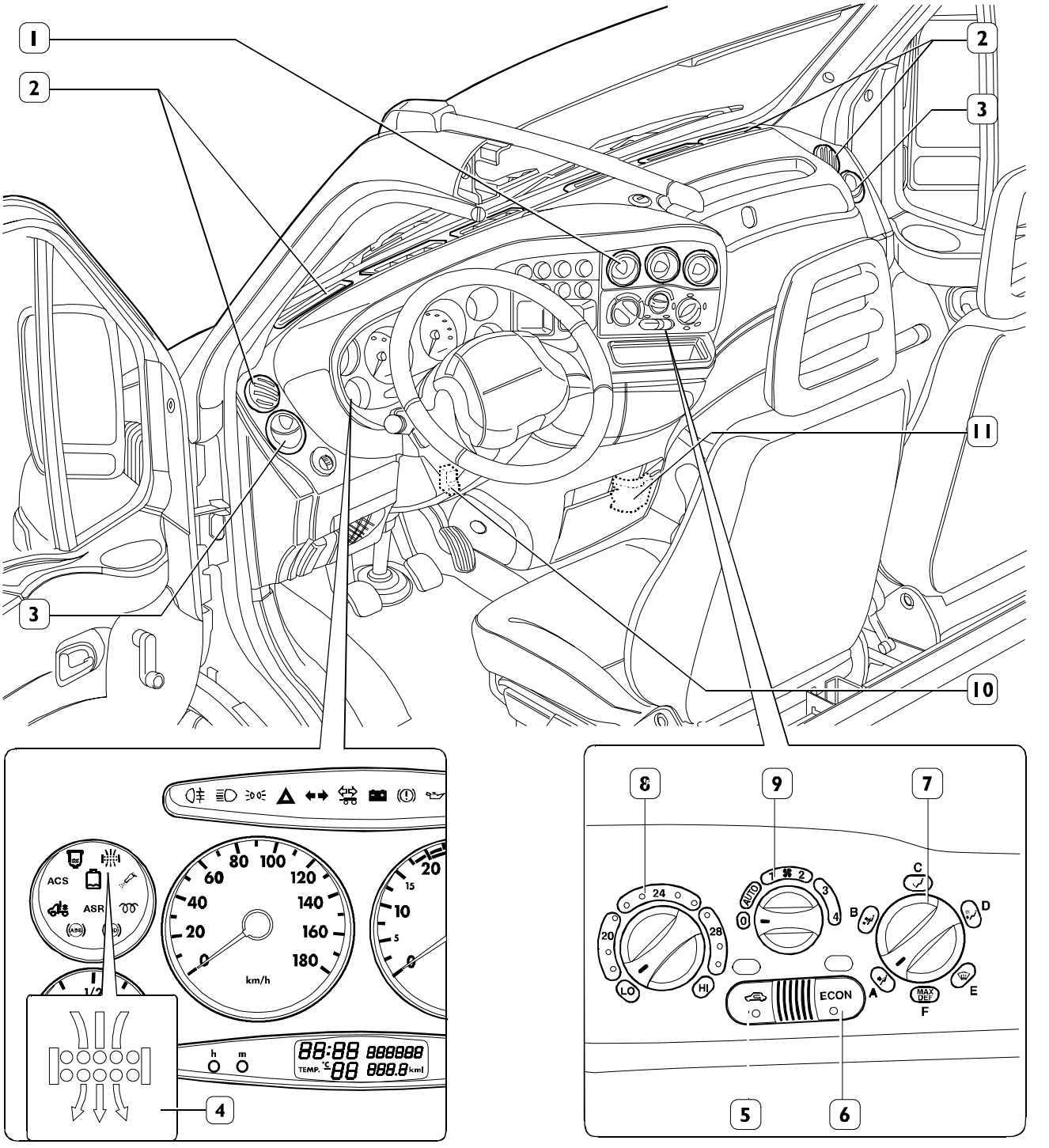

1. Central vents - 2. Demisting vents - 3. Side vents - 4. Air-conditioning system warning light - 5. Switch to activate the function of recycling air inside the cab - 6. Switch to turn off the air-conditioner - 7. Air distribution knob: A. air towards face / B. air towards face and feet / C. air towards feet / D. air towards feet and windscreen / E. air towards windscreen / F. MAX/DEF position: the system prepares for demisting - 8. Knob for air temperature control with end positions to activate HI and LO functions (max and min air temperature) - 9. Fan knob with relative operating speed manual/automatic/off - 10. Vent for driver's feet - 11. Vent for passenger's feet.

HEATER/AIR-CONDITIONER UNIT
Removal and Refitting

Removal

- ❑ First of all, disconnect the battery cables, drain off the engine coolant and discharge the gas in the air-conditioning system following the procedures described under the relevant headings.
- ❑ Remove the steering column from the fascia following the procedure described under the relevant heading.
- ❑ Remove the bottom covering of the fascia on the passenger's side (25) lifting it off the dual locks.
- ❑ Remove the covering of the instrument panel (31) lifting it off the dual locks after unscrewing the fixing screws (26).
- ❑ Remove the central bottom covering (18) lifting it off the dual locks after unscrewing the fixing screws (15).
- ❑ Remove the glove compartment (30) after unscrewing the fixing screws (28).
- ❑ Remove the upright covering (27) after unscrewing the fixing screws (29) on both sides of the vehicle.
- ❑ Remove the fascia side covering (10) after unscrewing the fixing screws (9) on both sides of the fascia.
- ❑ Remove the door to the fuses (11).
- ❑ Remove the bonnet opening knob (1) after unscrewing the retaining screw (2).
- ❑ Remove the instrument fascia (32) after unscrewing the fixing screws (14) and disconnecting the electrical connections (6).
- ❑ Remove the switch panel (17) after unscrewing the fixing screws (19) and disconnecting the electrical connections (16).
- ❑ Lift off the heater control knob (22).
- ❑ Remove the air-conditioning/heating controls mask (21) lifting it off the dual locks and disconnect the electrical connection (23).
- ❑ Unscrew the screws (20) securing the control unit to the fascia covering.
- ❑ Remove any loudspeakers (13) on both sides of the fascia after unscrewing the fixing screws (12) and disconnecting the electrical connection.
- ❑ Remove the fuse and contactor holder mounting (8) after unscrewing the fixing screws.
- ❑ Lift off any controls on the covering (e.g., the headlamp height adjustment control (7) and disconnect the relevant electrical connections.
- ❑ Unscrew the screws (24) securing the fascia covering to the framework and remove the covering (5) from the vehicle.
- ❑ Unscrew the nut (4) holding the bonnet opening rod (3).

Figure 15

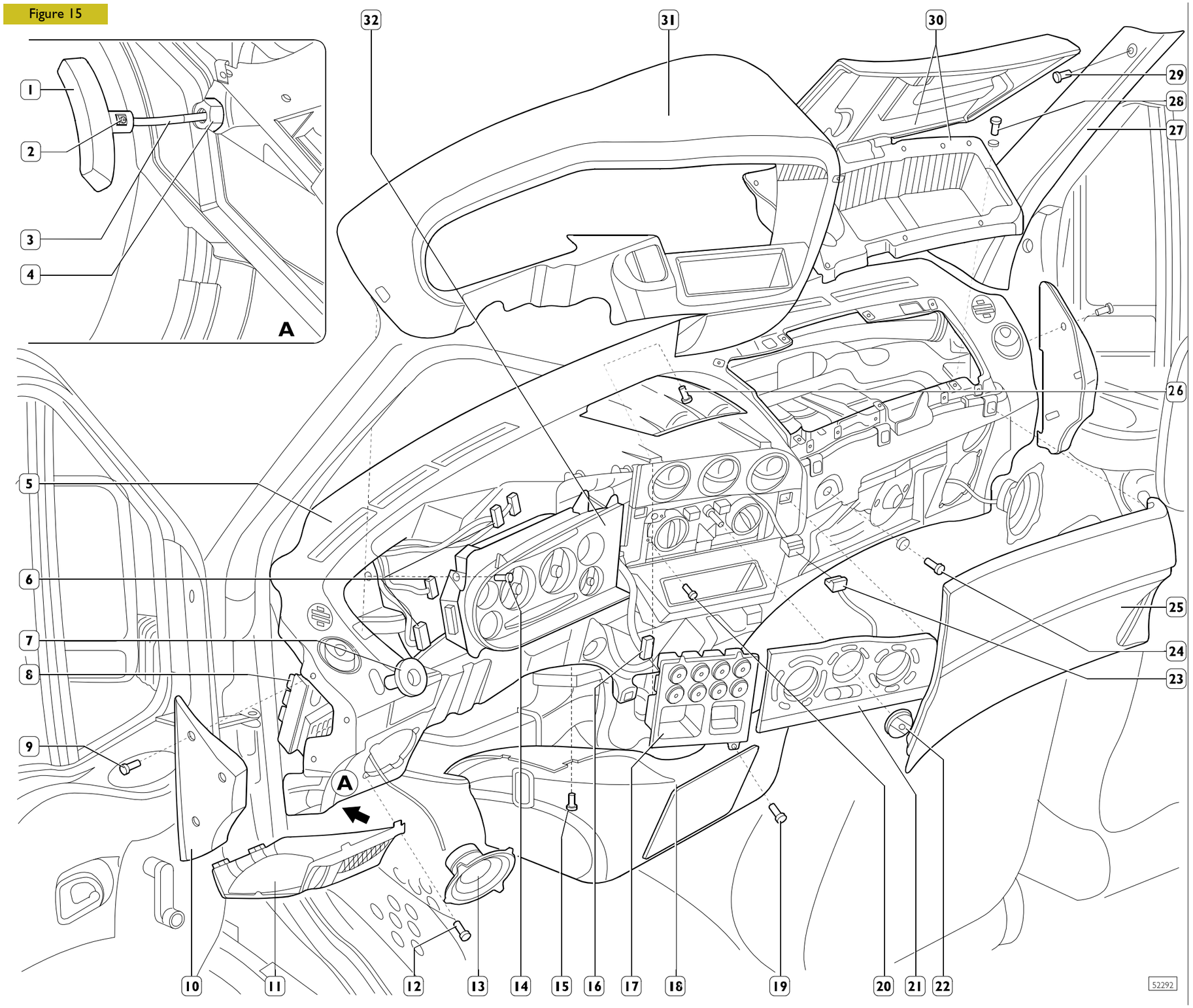

- ❑ Disconnect the ventilation duct (1) unscrewing the fixing screws (12).
- ❑ Disconnect the demisting duct (2) unscrewing the fixing screws (11).
- ❑ Remove the radio mounting box (8) unscrewing the fixing screws (9).
- ❑ Disconnect the duct distributing air towards the feet (6) unscrewing the fixing screws (5) and (7). Remove the bonnet opening cable from the framework.

Operations from the bonnet side (Detail B).

- ❑ Unscrew the fixing nuts (21). Remove and shift the expansion liquid reservoirs (22).
- ❑ Remove the seal clamps (19) and disconnect the delivery and return pipes (17) and (18) for the heater water.
- ❑ Unscrew the screws (14) and disconnect the pipes (13) and (16) supplying the evaporator.
- ❑ Unscrew the nuts (15) securing the flange.
- ❑ Unscrew the nuts (20) securing the heater on the union side.

Operations in the cab.

- ❑ Unscrew the nuts (4) and screws (10) and move the framework back together with the heater unit.
- ❑ Disconnect the electrical connections from the heater unit and cut the cabling retainer clamps.
- ❑ Unscrew the screws (24) securing the heater unit (23) to the cross member (3) (detail C).

Refitting

For refitting, position the fascia covering and retain it at the point shown in detail D. Then continue by carrying out the operations described for removal in reverse order, observing the required tightening torques for the screws and/or nuts. Afterwards, check that:

- ❑ the engine coolant is at the right level;
- ❑ the gas in the air-conditioning system is at the right pressure;
- ❑ the system and components involved in the above procedure work properly.

Figure 16

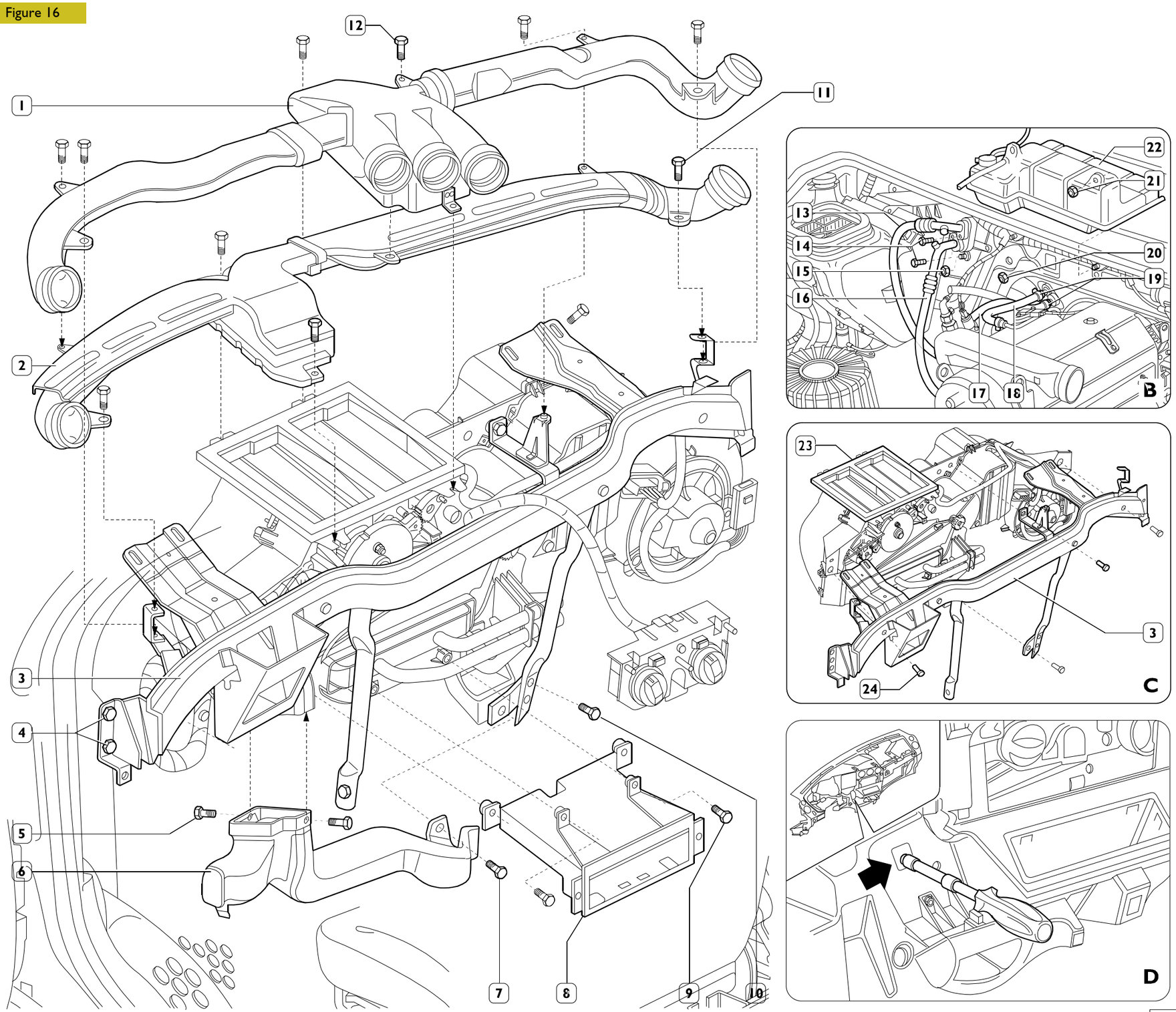

553230 "M. MARELLI" TYPE HEATER/AIR-CONDITIONER UNIT

Components

1. Strip on A.I. flange - 2. Treated air sensor - 3. Front door hatch - 4. Distribution bushing - 5. Recirculation door - 6. LH air intake box - 7. Cond. drain pipe retaining bracket - 8. Mixing actuator - 9. Rear box - 10. Distribution bushing - 11. Complete distribution door - 12. Strip - 13. Strip - 14. Radiating mass - 15. Wiring harness - 16. Tie rod - 17. Distribution lever - 18. MAX DEF cam - 19. Fan potentiometer - 20. Mixing potentiometer - 21. Control mounting - 22. Knob adapter ring - 23. Prism - 24. Complete microswitch - 25. Control pin - 26. Knob - 27. Cap spring - 28. Cap - 29. Condensation drain pipe - 30. Strip - 31. Condensation drain tub - 32. Control unit - 33. Condensation drain tub strip - 34. Front box - 35. Self-tapping insert - 36. Mixing/foot door lever - 37. Bushing - 38. Transmission - 39. Vent./demist. door lever - 40. Water pipe fixing U-bolt - 41. Distribution cam - 42. Control mounting bracket - 43. Anti-frost sensor - 44. Wiring retainer clamp - 45. Fan strip - 46. Electric fan - 47. Connection cover - 48. Motor mounting - 49. Spacer - 50. Connector bracket - 51. Electronic control - 52. Evaporator - 53. Distribution bushing - 54. Complete distribution door - 55. Evaporator strip - 56. Pipe - 57. OUT O-ring - 58. Expansion valve - 59. OUT O-ring - 60. Fixing screw - 61. IN O-ring - 62. IN O-ring - 63. Pipe passage strip - 64. Pipe strips - 65. A.I. actuator - 66. A.I. door lever - 67. RH air intake box - 68. Tie rod

Figure 17

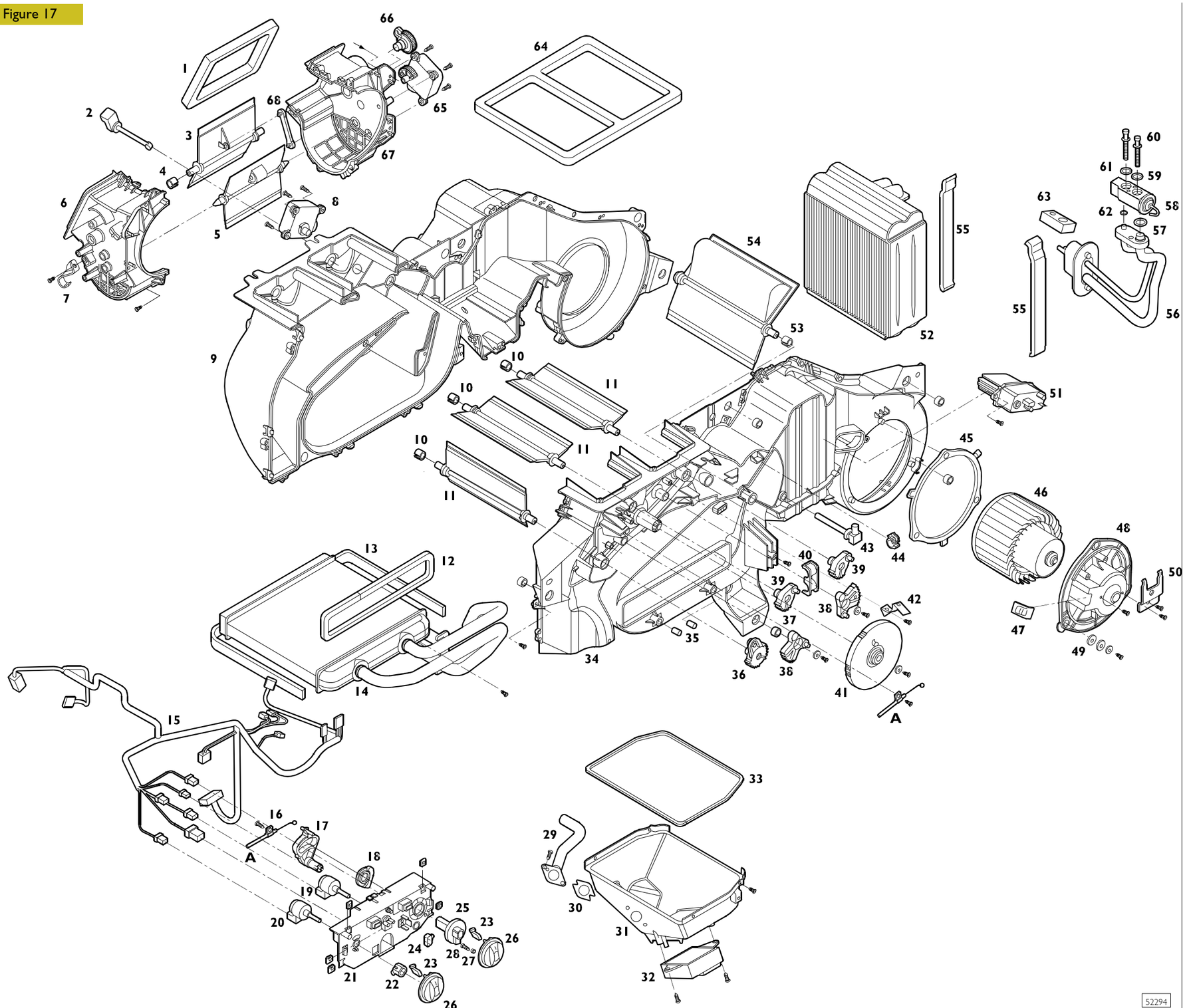

PROCEDURE FOR EMPTYING AND REFILLING THE AIR-CONDITIONING SYSTEMS WITH R134A REFRIGERANT

R134A refrigerant recovery and refilling station (99305146)

This station has been made to be used on all air-conditioning/ heating systems for motor vehicles using R134A gas.

By connecting the station to a refrigerating system the gas it contains can be recovered, cleaned and made ready to be reloaded into the system or be transferred to an external container. In addition, it is possible to see the amount of oil taken from the system, restore it and "empty" the system.

To be operative, the station needs to absorb approximately 3 kg of refrigerant.

For prompt use it is advised to have at least 2 kg of refrigerant in the filler cylinders and to keep the station as level as possible.

This procedure does not describe the phases of loading and unloading refrigerant to and from external and internal containers or maintenance. Therefore, please refer to the operating and maintenance manual of the appliance.

The station is composed of:

1 control panel;

2 container to restore any oil recovered when unloading;

3 flexible hoses;

4 container to collect any oil recovered from the system;

5 filler cylinder with graduated scale revolving.

Figure 18

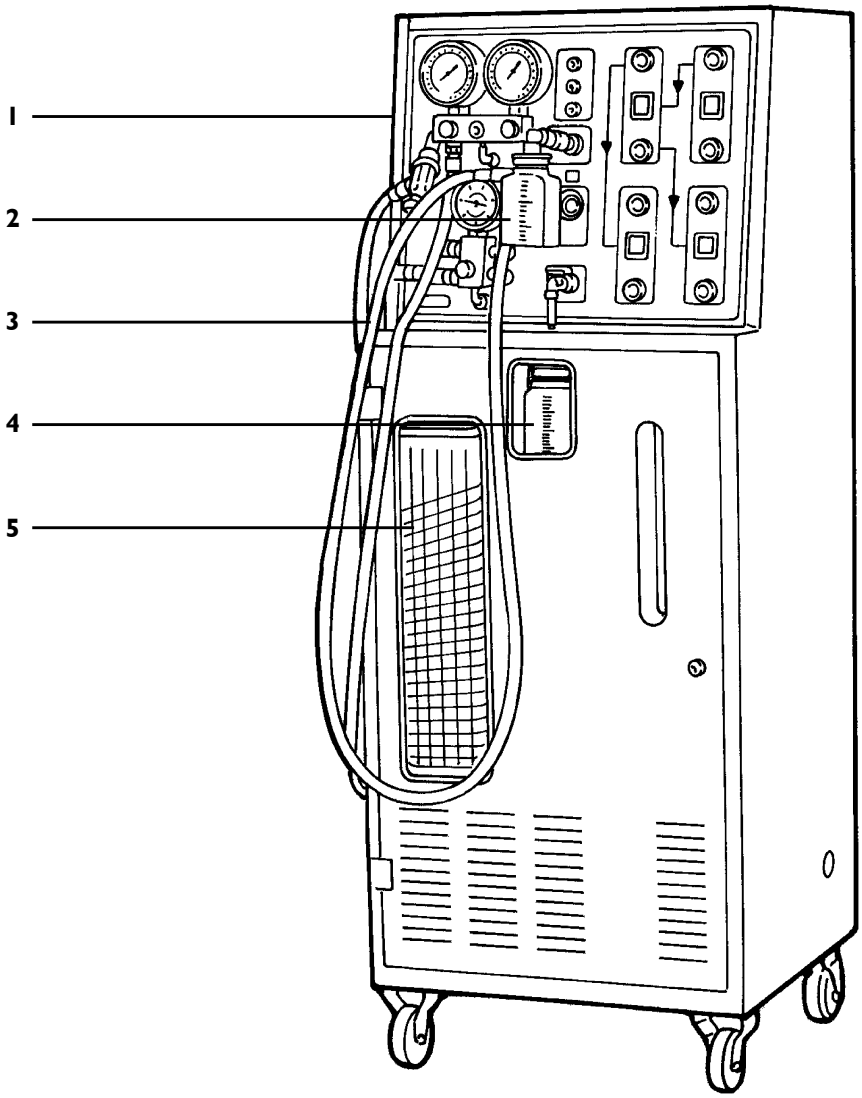

CONTROL FASCIA

Figure 19

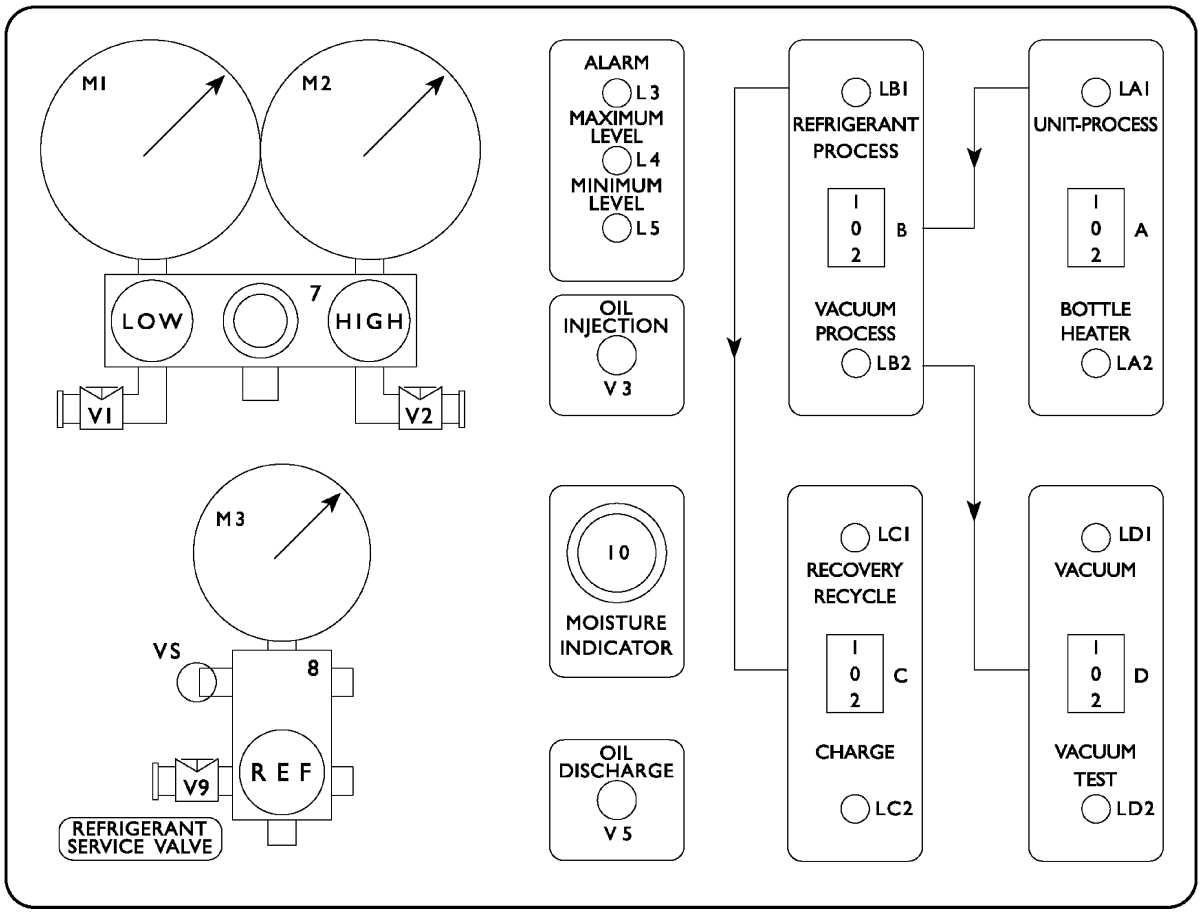

Figure 20

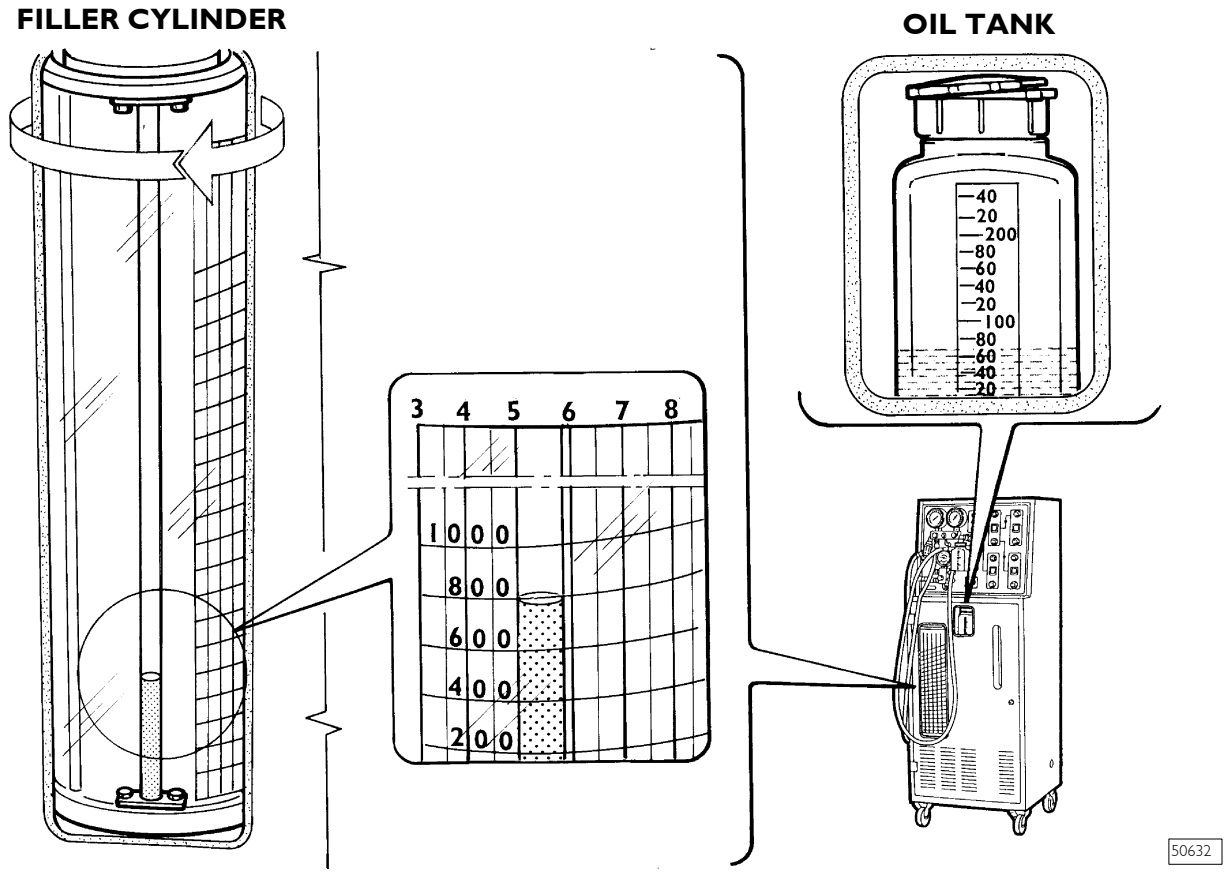

Control fascia diagram legend

M1	Low pressure gauge
M2	High pressure gauge
M3	Filler cylinder pressure gauge
LOW	Low-pressure valve
HIGH	High-pressure valve
REF	Refrigerant filler and drain valve
V1	Valve on low-pressure pipe
V2	Valve on high-pressure pipe
V3	Oil injection valve for A/C system
V5	Oil drainage valve
V9	A/C system washing refrigerant service valve
10	Moisture indicator
VS	Safety and drainage valve
L3	Alarm warning light
L4	Maximum level warning light
L5	Minimum level warning light
A	Unit process / bottle heater switch
LA1	Unit process indicator light
LA2	Bottle heater indicator light
B	Refrigerant process / vacuum process switch
LB1	Refrigerant process indicator light
LB2	Vacuum process indicator light
C	Recovery recycle cycle / Filling switch
LC1	Recovery recycle cycle indicator light
LC2	Filling indicator light
D	Vacuum / vacuum test switch
LD1	Vacuum indicator light
LD2	Vacuum test indicator light

Filler cylinder legend

1 Pressure values in bar (vertical lines, revolving top cylinder).

2 Weight of load in grams (oblique lines, revolving top cylinder) 50 g division between lines.

3 Tank level viewer (internal cylinder).

SAFETY STANDARDS



This station is exclusively for professionally trained operators who must be familiar with refrigerating systems, refrigerant gases and the damage pressurized equipment can cause, therefore:

- ❑ always wear gloves and goggles when working with refrigerant gases. Contact of refrigerant liquid with the eyes can cause blindness;
- ❑ avoid all contact with skin (low boiling point -30°C can cause frostbite);
- ❑ never inhale the vapours of refrigerant gases;
- ❑ before connecting the station with a system or external container, check that all the valves are closed;
- ❑ before disconnecting the station, check that the cycle is over and all the valves are closed. This will prevent dispersing refrigerant gas into the atmosphere;
- ❑ never expose the unit or operate it in acidic or wet environments or close to open containers of inflammable substances;
- ❑ the unit must operate in places with good ventilation;
- ❑ never alter the settings of the safety valves and control systems;
- ❑ never use bottles or other storage containers that are not approved and are not fitted with safety valves;
- ❑ never load any container over 80% of its maximum capacity;
- ❑ never leave the unit powered if it is not to be used immediately. Cut off the mains power supply when it is not planned to use the equipment.

The station is equipped with special fittings to avoid contamination with systems using R12. Do not attempt to adapt this unit for use with R12.

OPERATION FLOW CHART

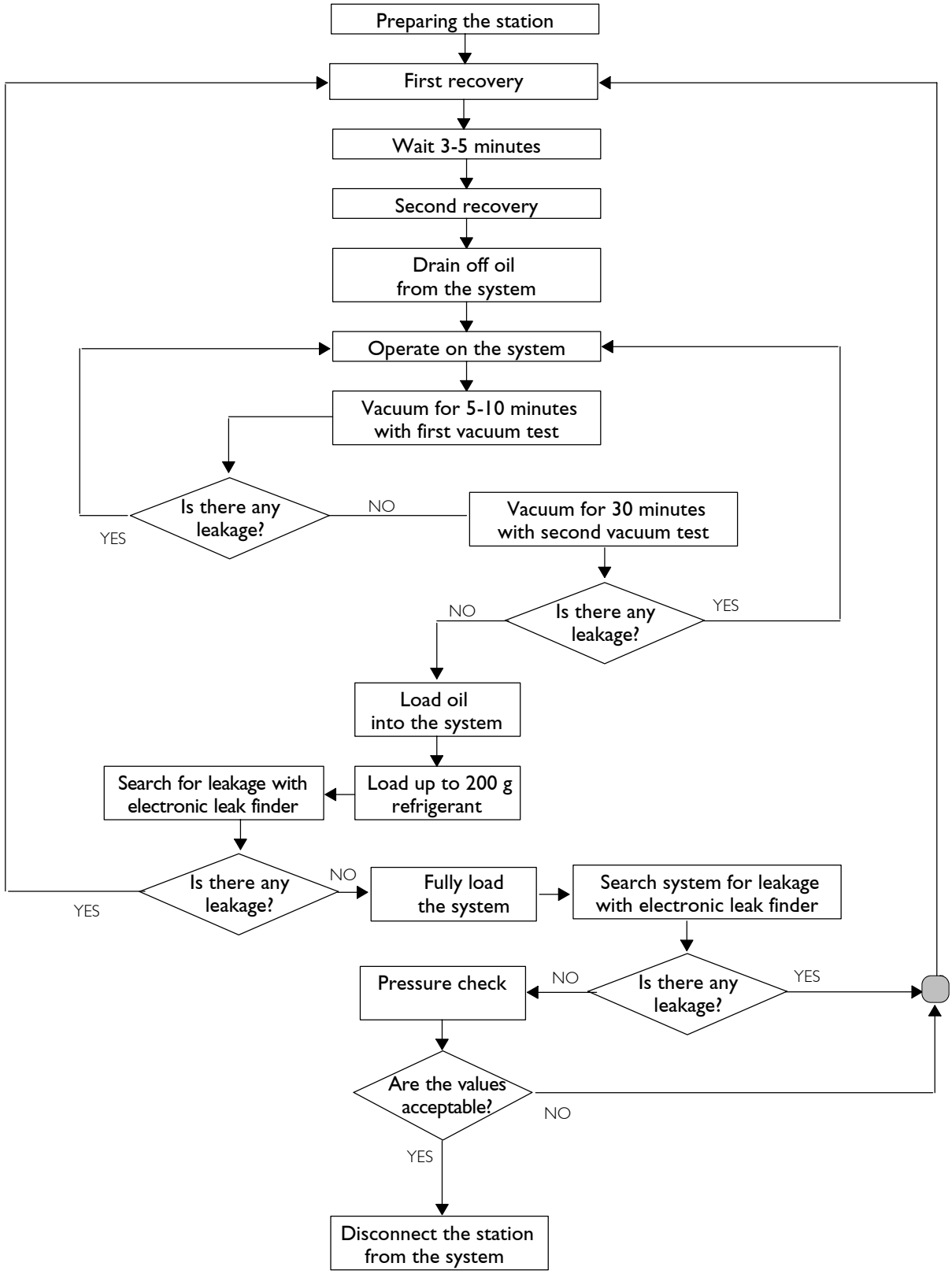

RECOVERING REFRIGERANT FROM THE VEHICLE SYSTEM

Before starting to disconnect the pipes from the air-conditioner, check whether it is possible to do the repairs without discharging the gas.

If this is not possible, the following operations must be carried out:

- ❑ connect the pipe marked **HIGH** under the pressure gauge to the evaporator inlet (the inlet is the one on the pipe with a smaller diameter (H) connecting the drier filter with the evaporator);
- ❑ connect the pipe marked **LOW** under the pressure gauge to the evaporator outlet (the outlet is the one on the pipe with a larger diameter (L) connecting the evaporator with the drier);
- ❑ open the valves **V1** and **V2**;
- ❑ open the **LOW** and **HIGH** cocks.

Figure 21

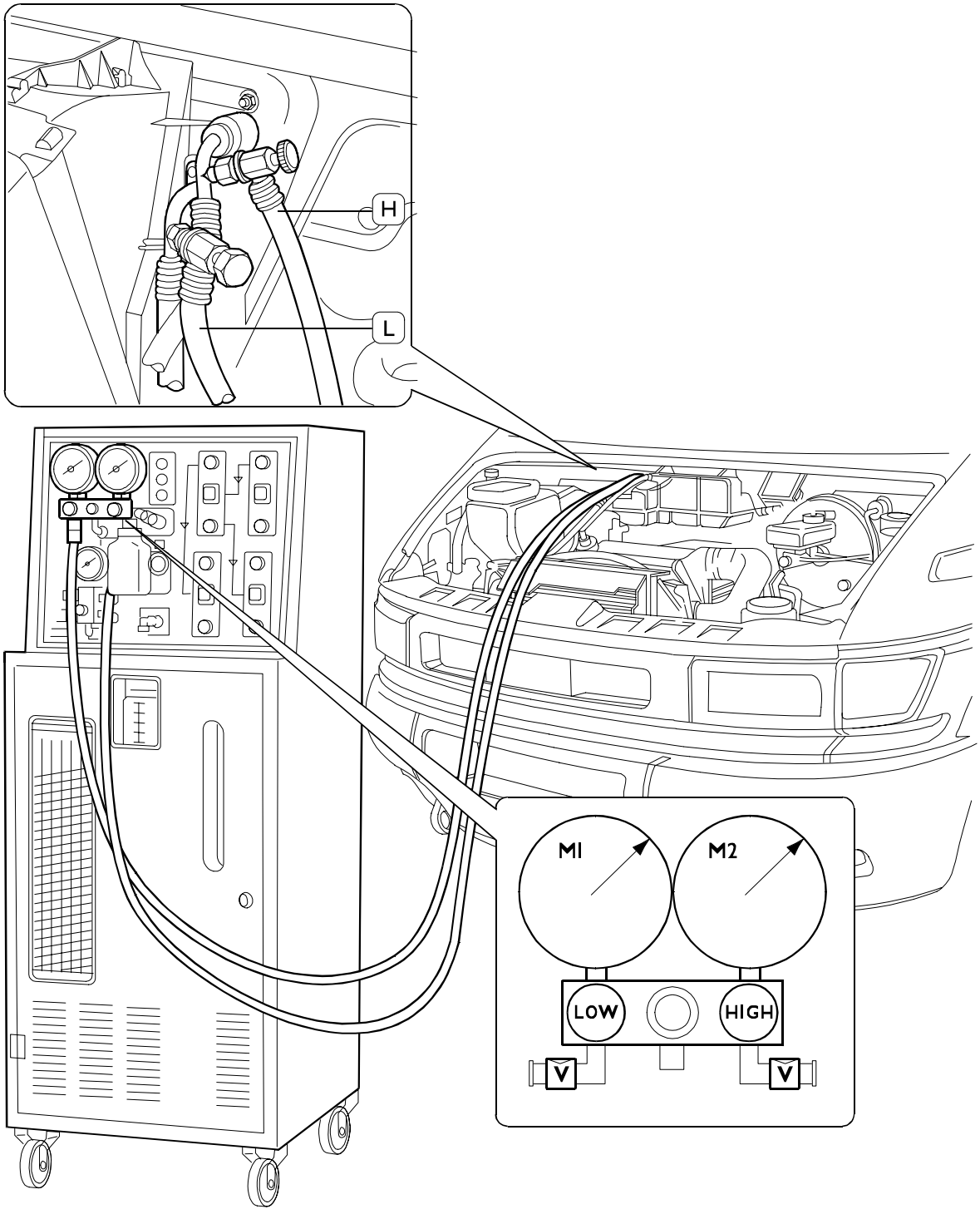

52295

- ❑ connect the station to the electricity mains (220 V - 50 Hz);
- ❑ press the switch **A** (Process Unit) onto position 1
  The respective indicator light **LA1** will come on;
- ❑ press the switch **B** (Refrigerant Process) onto position 1;
- ❑ the respective indicator light **LB1** will come on;
- ❑ press the switch **C** (Recovery Recycle) onto position 1.
  The recovery and recycling operation will start automatically. The respective indicator light LC1 will come on to signal the operation in progress.
  On completing this operation the unit will automatically stop and the indicator light **LC1** go out. Wait for a few minutes so that any pockets of refrigerant at low pressure remaining in the system can increase their pressure, by absorbing heat, and be able to be recovered. The station will automatically repeat the recovery cycle if the above conditions occur;
- ❑ put the switches A, B and C back onto position 0;
- ❑ close the **V1**, **V2**, **LOW** and **HIGH** valves.

If the refrigerant reaches the maximum level (maximum level indicator light L4 on), the recovery cycle must be stopped immediately by pressing switch C onto position 0 and transferring the refrigerant from the filler cylinder to a suitable external bottle.

- ❑ Continue the operations following the instructions given on the following pages.

Figure 22

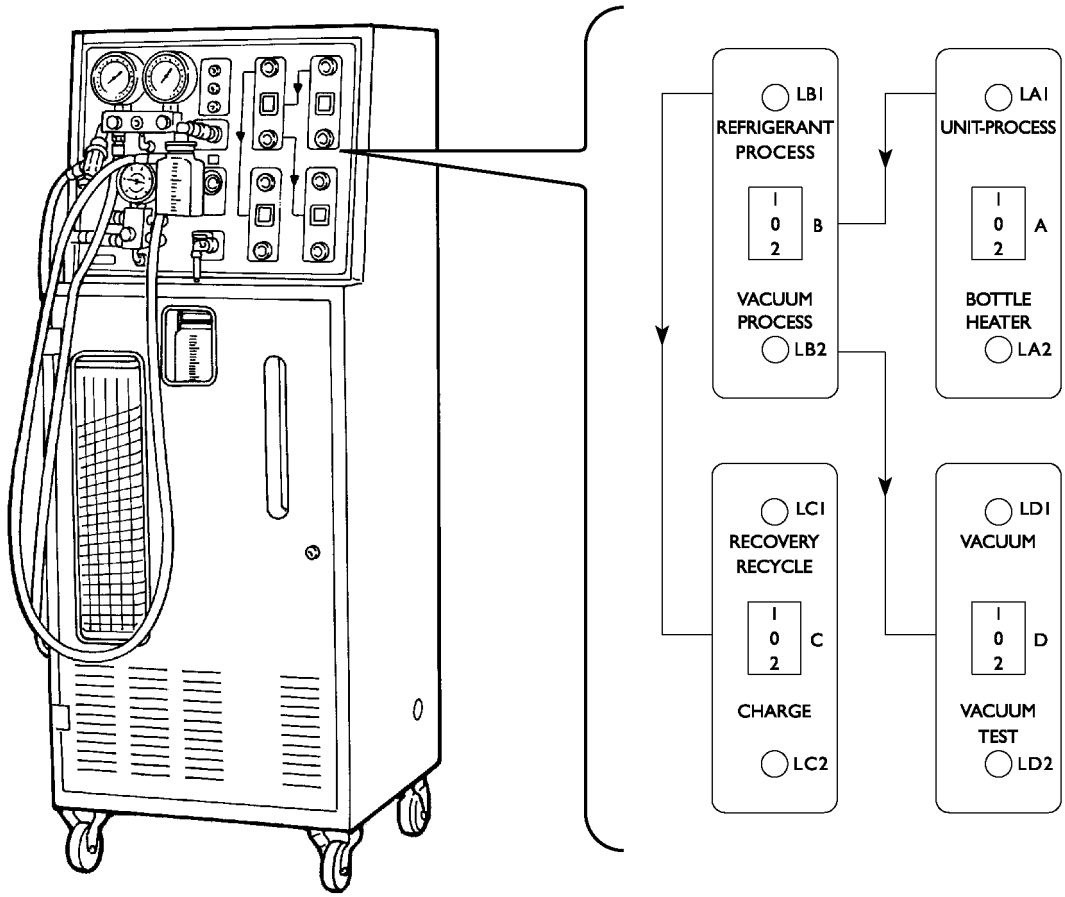

CREATING A VACUUM IN THE SYSTEM

This operation should be carried out if all the repairs have been performed and the system components have been properly refitted. This operation is the phase prior to refilling, therefore proceed as follows:

Do not run the vacuum cycle when there is even minimal pressure in the station or system.

- ❑ Connect the pipes to the specific system connections and open the **V1-V2/LOW** and **HIGH** valves.
- ❑ Press the switch **A** (Process Unit) onto position 1. The respective indicator light **LA1** will come on.
- ❑ Press the switch **B** (Vacuum Process) onto position 2. The respective indicator light **LB2** will come on.
- ❑ Press the switch **D** (Vacuum) onto position 1. The system will automatically start being evacuated and the respective indicator light **LD1** will come on to signal the operation in progress.

After a few minutes of operation (10 at most) if the system has no leaks the indicator light LD2 VACUUM TEST will also come on. From this time on, evacuation should be continued for at least two hours to obtain a good evacuation.

The indicator light LD2 vacuum test fails to come on if there is a leak. Stop evacuation, eliminate the leak and repeat the evacuation procedure.

- ❑ At the end of the time programmed for evacuation, press the switch **D** (vacuum test) onto position 2 and leave the system in this state for 3-5 minutes.
  The indicator light **LD2** VACUUM TEST is on if the system has a good seal. The indicator light **LD2** VACUUM TEST goes out if there is a leak. Eliminate the leak and repeat the evacuation cycle.
- ❑ Put the switches **D** and **B** back onto position 0 and proceed with the following phase.

Figure 23

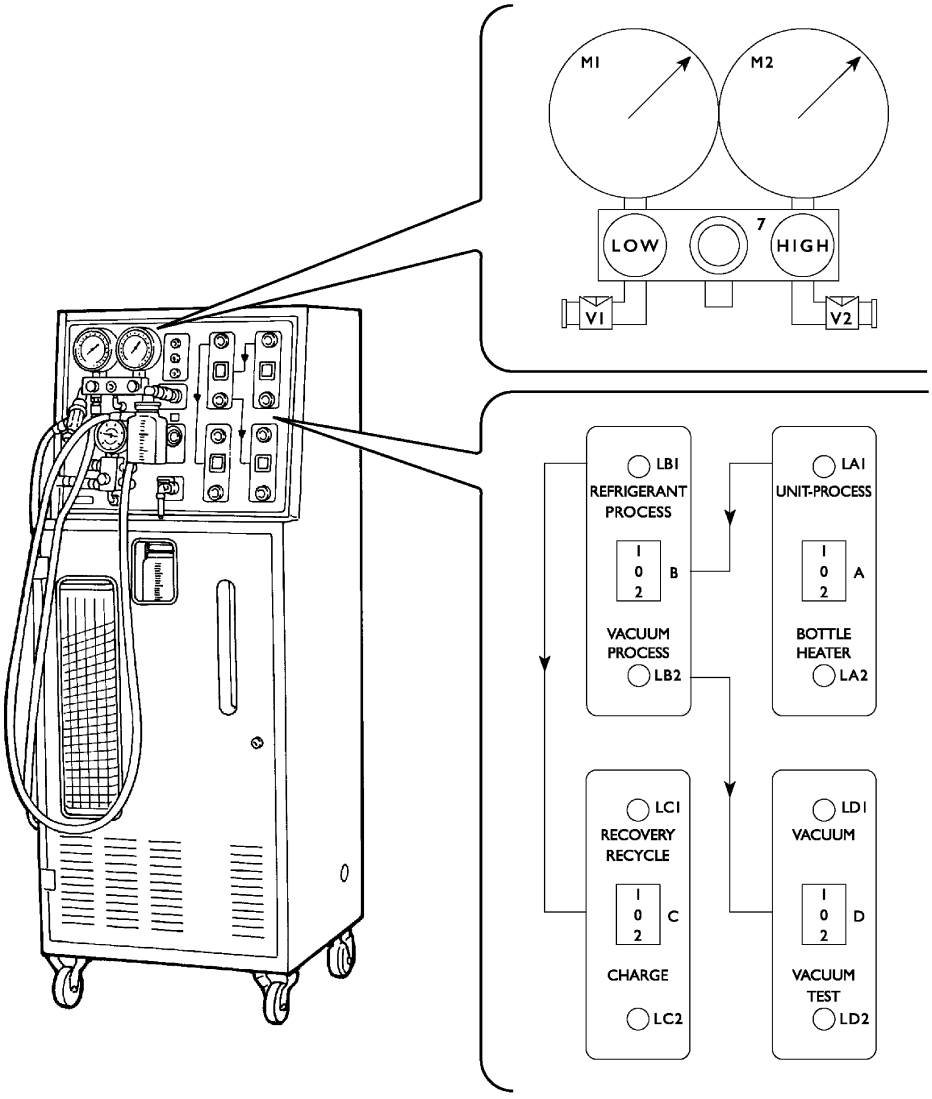

It is possible that at the end of each recovery cycle the station may have recovered lubrication oil from the compressor, which should be drained off into a specific graduated container (1).

1 Slowly open the valve **V5** (Oil Discharge).

2 When all the oil has been discharged into the container (1) close the valve **V5**.

3 Quantify and **record** the amount of oil discharged.

4 Eliminate the recovered oil correctly.

This oil cannot be reused.

The same amount of new oil as has been removed must be added to the system.

Figure 24

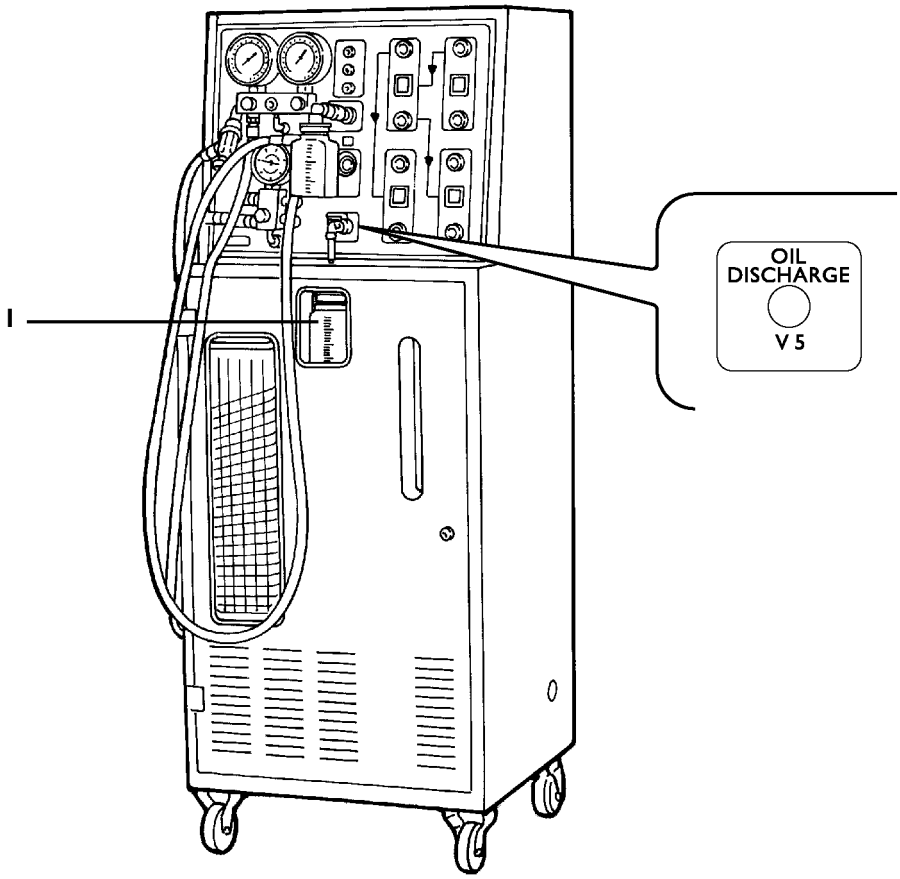

50638

RESTORING OIL IN THE SYSTEM

If during the recovery and recycle phase, oil from the system has been removed, it must now be replenished:

- ❑ take the metering device supplied with the right amount of lubricant for the system concerned, or previously measured;
- ❑ connect the metering device (1) to the lubricant injection valve **V3**;
- ❑ open the valve **V3** and then carry out the system vacuum phase for a few moments;
- ❑ open the valve mounted on the metering device container (1). The oil will be drawn into the system;
- ❑ close the valve **V3** and the valve on the metering device container when the required quantity of lubricant has been drawn in;
- ❑ disconnect the metering device (1) from the injection valve **V3** and fit the protective cap back on.

Keep the oil containers well sealed in order to avoid contamination. In particular, remember that oil is extremely hygroscopic:

- ❑ never open the oil injection valve **V3** if the system has positive pressure;
- ❑ oil should only be injected with a vacuum in the system;
- ❑ the oil level must never fall under the suction pipe (air would get into the system).

Figure 25

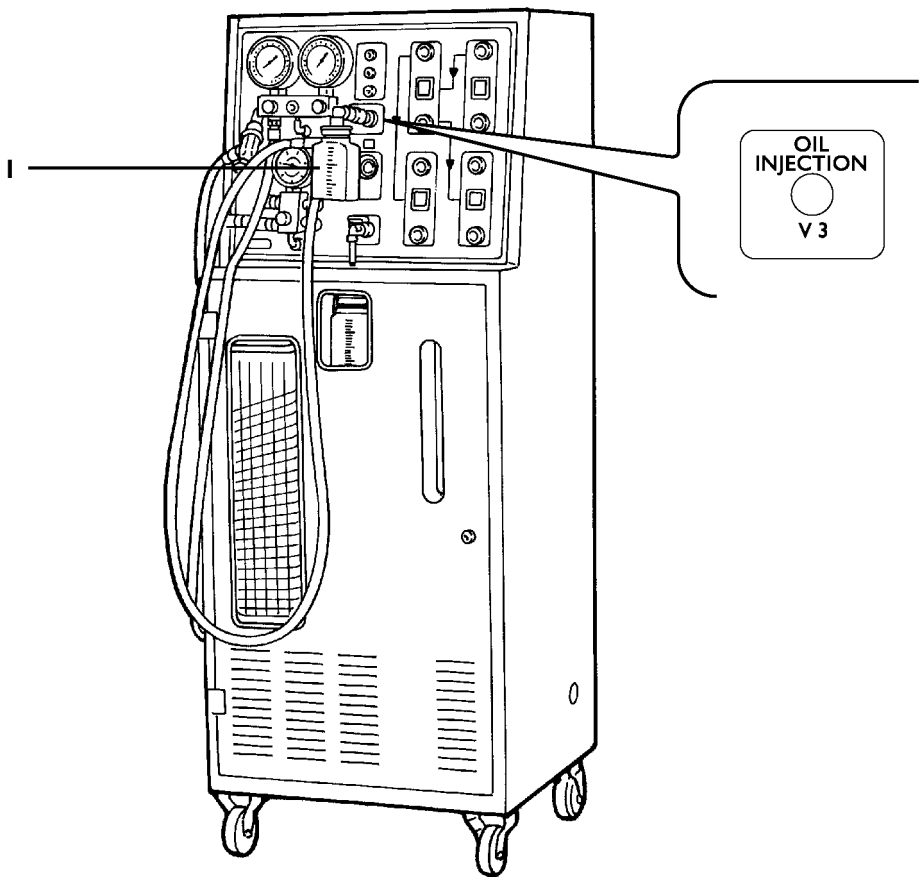

FILLING THE SYSTEM WITH REFRIGERANT

Before refilling, it is wise to be aware of some important rules:

- ❑ know the quantity of refrigerant to use (it is normally written on an adhesive plate affixed on the vehicle);
- ❑ the filler cylinder is equipped with a minimum level check that prevents introducing incondensable gas into the system.
  This is why the last approx. 600 g of refrigerant it contains cannot be used;
- ❑ therefore, before filling, check that the cylinder contains a sufficient quantity for filling (maximum quantity that can be used 3800 g);
- ❑ if the pressure inside the filler cylinder indicated on the pressure gauge (2) is greater than as required, which can be seen on the filler cylinder window approx. 10 bar max, discharge the excess pressure through the valve (1) on the pressure gauge assembly to bring it down to the right level, reading the value on the pressure gauge.

To transfer refrigerant from an external bottle to the filler cylinder and vice versa, refer to the equipment manual.

Considering that the amount of refrigerant depends on its pressure, to know the actual weight it is necessary to turn the outside of the filler cylinder so the line of the diagram matches the level viewer. In this way we can know the exact quantity of refrigerant in the cylinder (starting weight).

When calculating the weight of the refrigerant, in addition to the 600 g that cannot be used, remember to increase the load by approximately 100 g (this is the weight of refrigerant contained in the station-system connecting pipes). The right quantity of refrigerant to introduce into the system will therefore be given by: 600 g + 100 g + (quantity referred to the system capacity).

Always check before filling that the indicator on the "console" shows the refrigerant contains no moisture, in which case the indicator will be bright green. If this is not so, replace the filters in the station as instructed in the equipment manual.

Figure 26

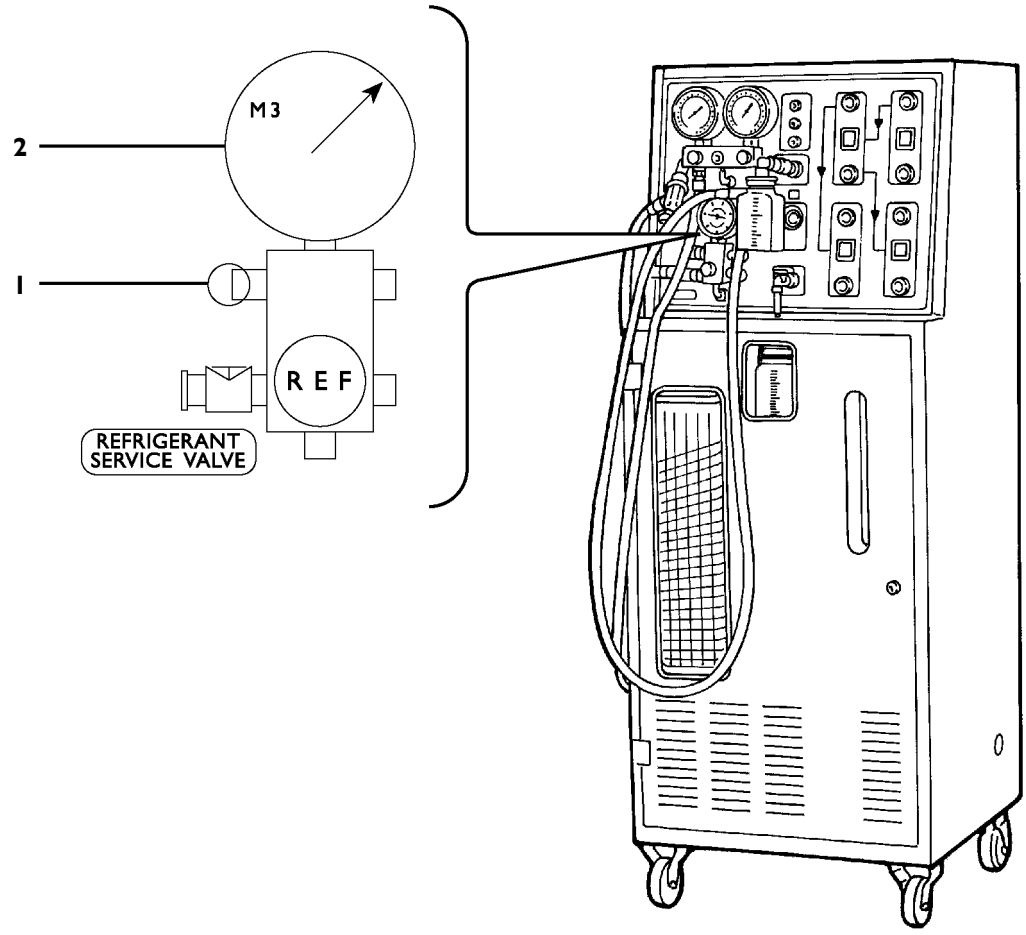

When the cylinder contains the necessary quantity for filling (both pipes must already be connected to the system connectors since the vacuum operation has already been performed), proceed as follows:

- close the **LOW** valve, keep the **HIGH** and **V1 - V2** valves open;
- press the switch **B** (Refrigerant process) onto position 1, the indicator light **LB1** will come on;
- press the switch **C** (Charge) onto position 2, the respective indicator light **LC2** will come on and refrigerant will flow from the station into the system;



When filling, if the level of refrigerant in the cylinder falls under the required quantity the system will stop and the Minimum Level indicator light (L5) will come on.

- having loaded 200 ÷ 500 g of refrigerant, depending on the size of the system, stop filling by moving the switch **C** (Charge) onto position 0;
- check the system is properly sealed with the electronic leak finder;
- complete filling the system until the **pre-calculated residual weight** in the cylinder is reached;
  (Residual weight = Total weight - System capacity weight)
- complete filling, move the switches **C - B** and **A** onto position 0 (A had been moved for the vacuum).
  Check again there is no leakage;
- close the **HIGH** valve.

Figure 27

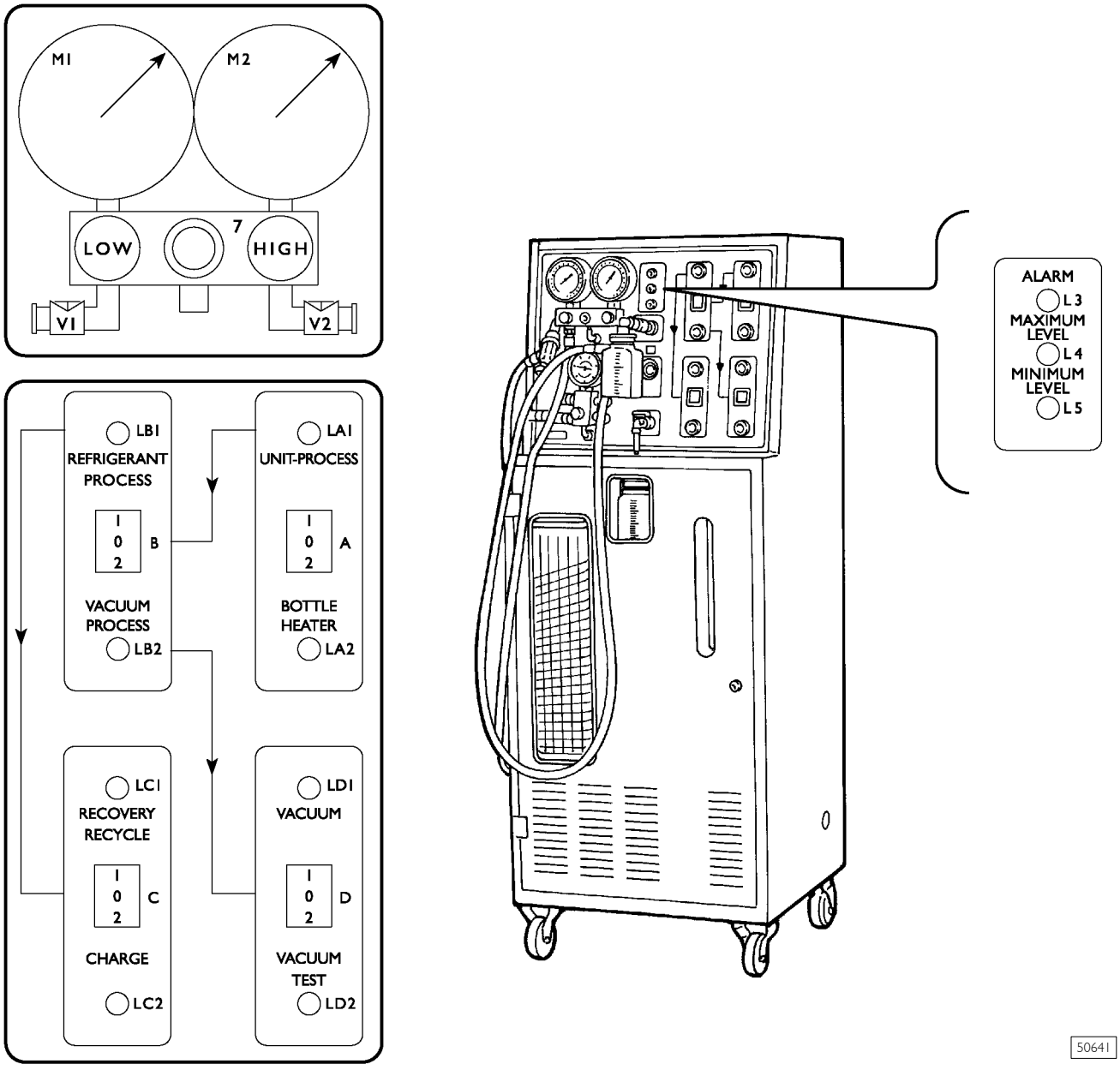

CHECKING THE PRESSURES IN THE SYSTEM

After filling, leave the pipes connected and carry out the following check:

- close the **HIGH** and **LOW** valves, **V1** and **V2** open;
- turn on the engine, switch on the air-conditioner and check on the pressure gauges **M1** and **M2** that the pressures correspond, normally: low pressure no less than 1 bar, high pressure 15 ÷ 18 bar, depending on the system specifications.

OPERATIONS PRIOR TO DISCONNECTING THE STATION FROM THE SYSTEM

Always observing the above safety rules, carry out the following operations:

- check that all the valves are closed: **LOW - HIGH**, **V1 - V2**;
- disconnect the pipes of valves **V1 - V2** and put the caps back onto the system valves;
- Check the system again with the leak finder.

Normally, with the air-conditioner switched on, air should come out of the vents at a temperature lower than 5°C and after a period of operation to stabilize the temperature of the ducts.

Figure 28

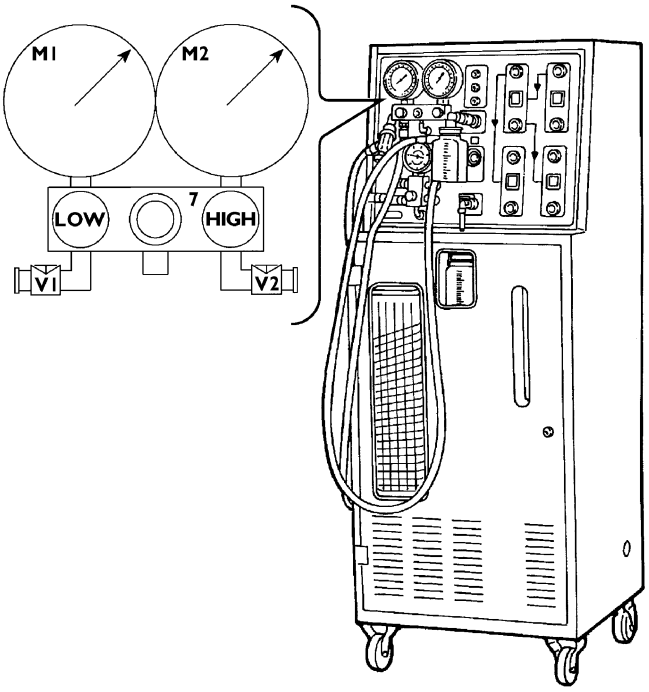

50642

LEAK FINDER FOR AIR-CONDITIONING SYSTEMS WITH HFC R134A (9905147)

Tool L-780A makes it possible to identify leakage of HFC 134A gas from the system extremely accurately in the order of 3.3 g a year with the switch on maximum sensitivity.

This instrument requires no settings, the operator only needs to select the desired sensitivity.

The instrument warns the operator of any gas leakage with a buzzer and a LED that flashes in proportion to the concentration of gas.

In addition, the LED indicates the battery is flat if it goes out.

Operating temperature is between 0 C and 50°C.

The instrument is equipped with a flexible probe to reach particularly difficult fittings or parts.

The two levels of sensitivity are:

- low sensitivity = 16.5 g/year;
- high sensitivity = 3.3 g/year.

Before checking vehicles, wait for the engine to cool, the hot parts can falsify the test.

Figure 29

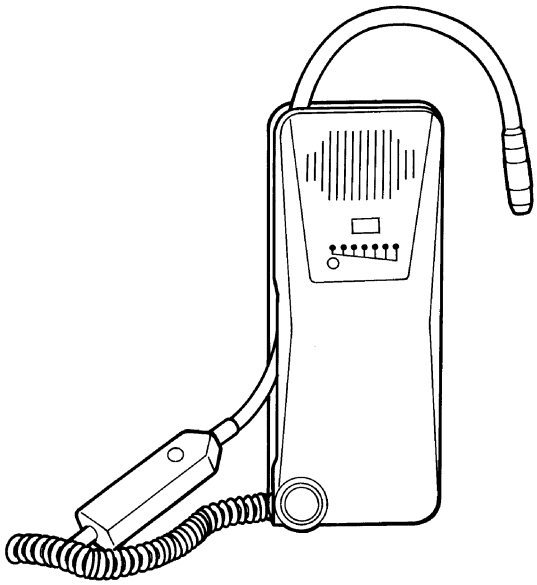

50643

REPAIRS

553248 Air-conditioner unit control unit
Removal - Refitting
Removal

Figure 30

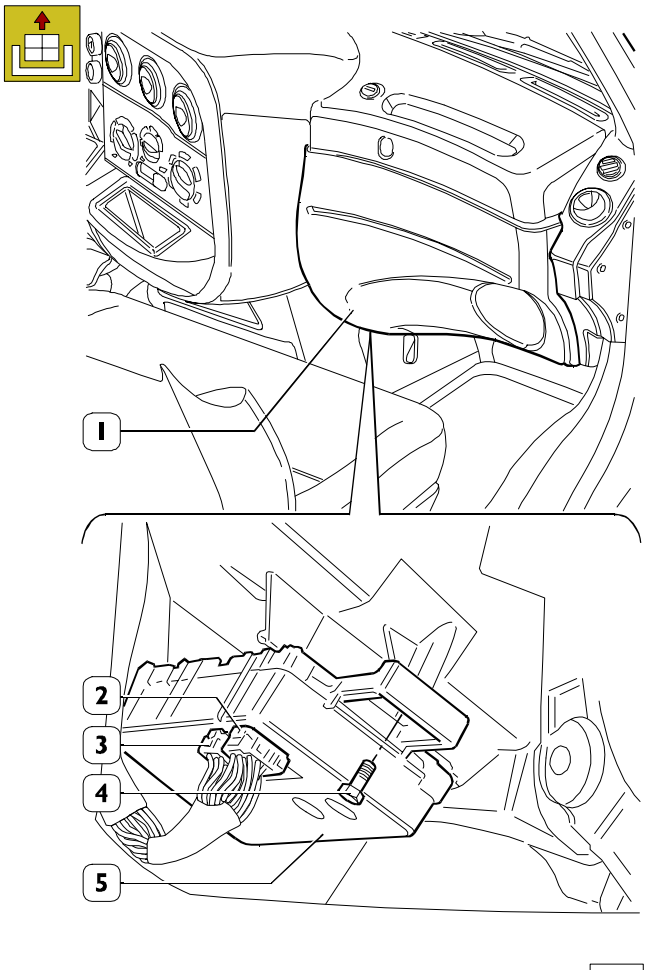

- ❑ Turn over the bottom door on the passenger side (1).
- ❑ Disconnect the electrical connections (2) and (3).
- ❑ Unscrew the fixing screws (4) and remove the control unit (5).

Refitting

Refit the control unit by carrying out the operations described for removal in reverse order.

ELECTRONIC CONTROLLER
Removal - Refitting
Removal

Figure 31

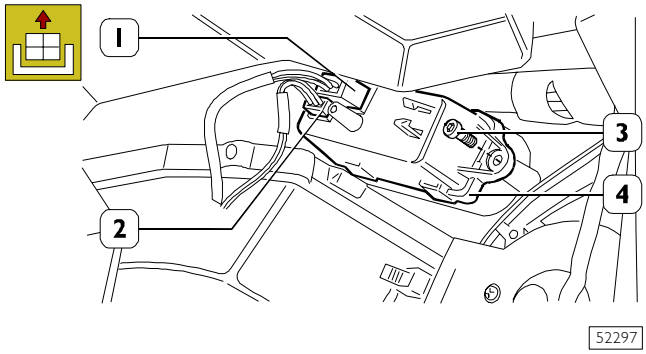

- ❑ Turn over the bottom door on the passenger side.
- ❑ Disconnect the electrical connections (1) and (2).
- ❑ Unscrew the fixing screws (3) and remove the electronic control (4).

Refitting

Refit the control unit by carrying out the operations described for removal in reverse order.

ANTI-FROST SENSOR
Removal - Refitting
Removal

Figure 32

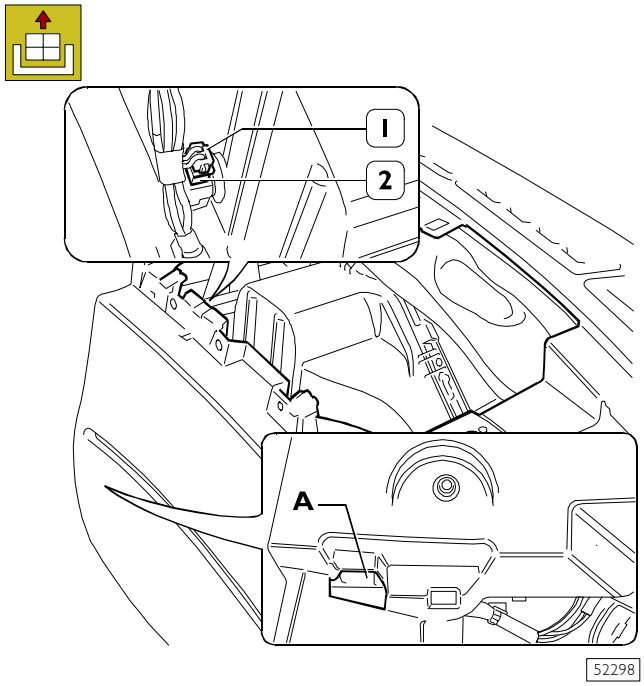

- ❑ Remove the glove compartment by following the procedure described above.
- ❑ Disconnect the electrical connection (1), remove the anti-frost sensor (2) through the slot A illustrated in the detail after turning over the bottom door on the passenger side.

Refitting

Refit the anti-frost sensor by carrying out the operations described for removal in reverse order.

553237 ELECTRIC FAN

Removal - Refitting
Removal

Figure 33

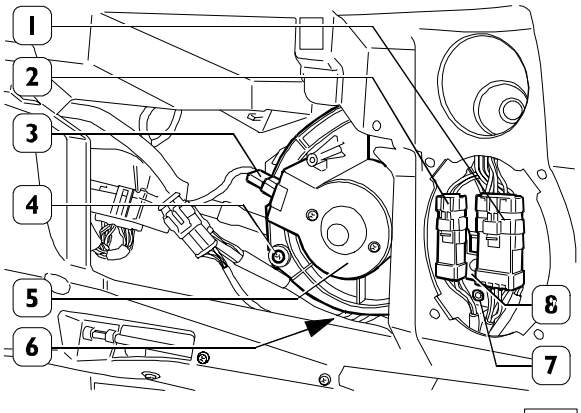

- ❑ Turn over the bottom door on the passenger side, following the procedure described above.
- ❑ Disconnect the electrical connections (1), (2) and (3).
- ❑ Unscrew the screw (7) and remove the connector bracket (8) to access the fixing screw (4).
- ❑ Unscrew the fixing screw (4), remove the electric fan (5) and the gasket (6).

Refitting

Refit the electric fan by carrying out the operations for removal in reverse order, taking care to replace the gasket (6) if it is damaged.

553215 HEATER RADIATOR

Removal - Refitting
Removal

Figure 34

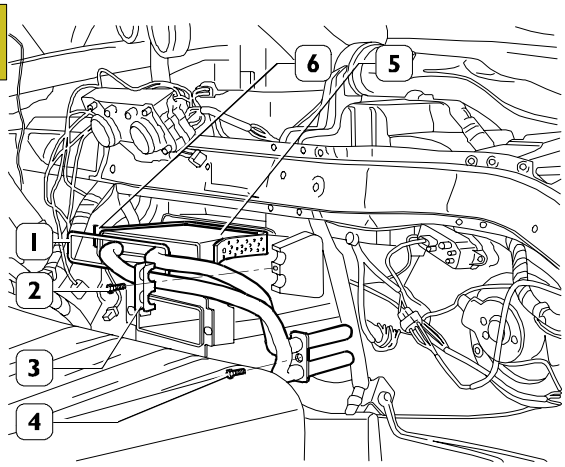

- ❑ Drain off the engine coolant.
- ❑ Unscrew the fixing screws and move the expansion tub to one side so as to be able to access the heater coolant inlet/outlet couplings.
- ❑ Remove the seal clamp.
- ❑ Disconnect the pipes from the heater.
- ❑ Remove the fascia covering, following the procedure described above, so as to access the radiator fixing points.
- ❑ Unscrew the screw (2) securing the stand anchoring the pipe (3), unscrew the screw (4) securing the pipes to the heater.
- ❑ Extract the radiator (5) from the heater and remove the seals (1) and (6).

Refitting

Refit the radiator by carrying out the operations for removal in reverse order, taking care to replace the seals (1) and (6) if they are damaged.

553252 MIXING ACTIVATOR

Removal - Refitting
Removal

Figure 35

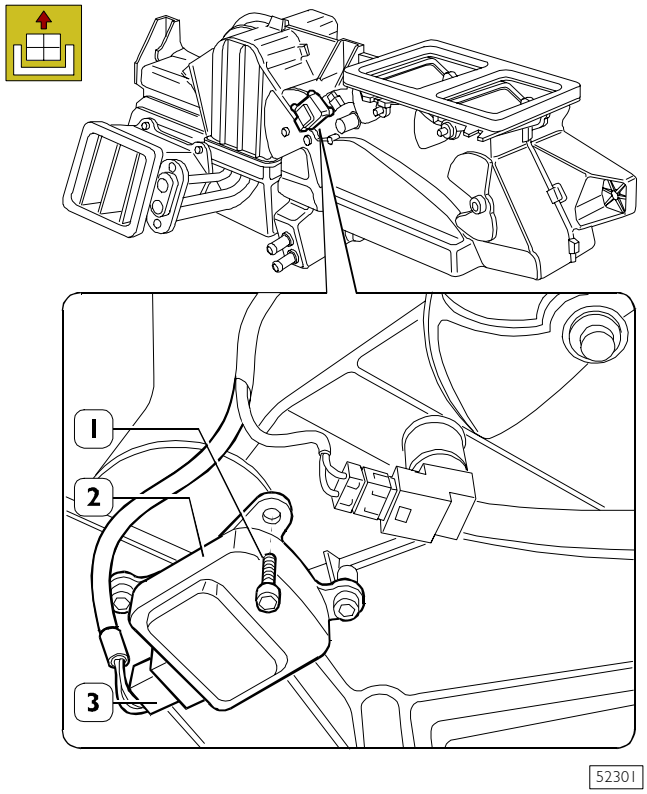

- ❑ Remove the fascia covering, following the procedure described above.
- ❑ Disconnect the electrical connection (3) from the activator, (2) located at the point shown in the figure.
- ❑ Unscrew the fixing screws (1) and remove the activator (2) from its seat.

Refitting

For refitting, carry out the procedure described for removal in reverse order.

553253 AIR INTAKE ACTUATOR

Removal - Refitting
Removal

Figure 36

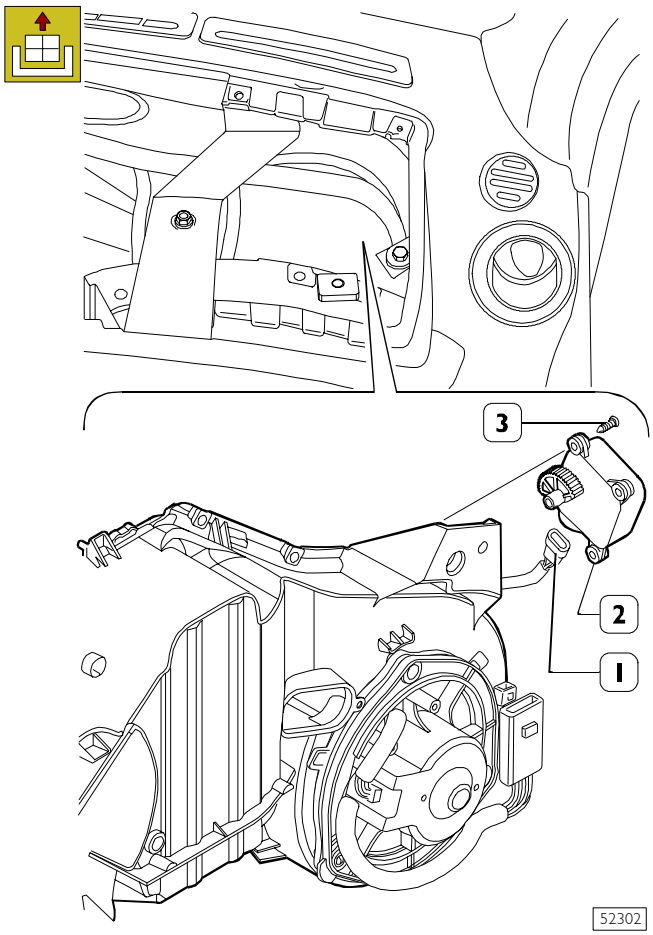

- ❑ Remove the glove compartment, following the procedure described above.
- ❑ Disconnect the electrical connection (1) from the actuator, located at the point shown.
- ❑ Unscrew the fixing screws (3) and remove the actuator (2) from the heater unit.

Refitting

Refit the unit by carrying out the procedure described for removal in reverse order, checking the cogged sector couples correctly.

553241 TREATED AIR SENSOR

Removal - Refitting
Removal

Figure 37

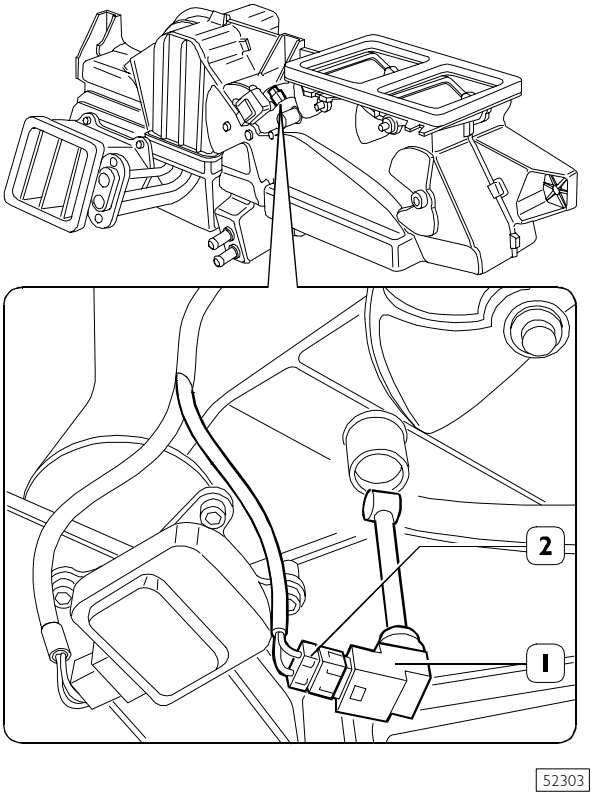

- ❑ Remove the fascia covering and partially remove the heater unit, without taking it out of the vehicle, following the procedure described above, to access the sensor.
- ❑ Disconnect the electrical connection (2), lift up and remove the sensor (1) from the heater unit.

Refitting

For refitting, carry out the procedure described for removal in reverse order.

553231 EVAPORATOR UNIT

Removal - Refitting
Removal

Figure 38

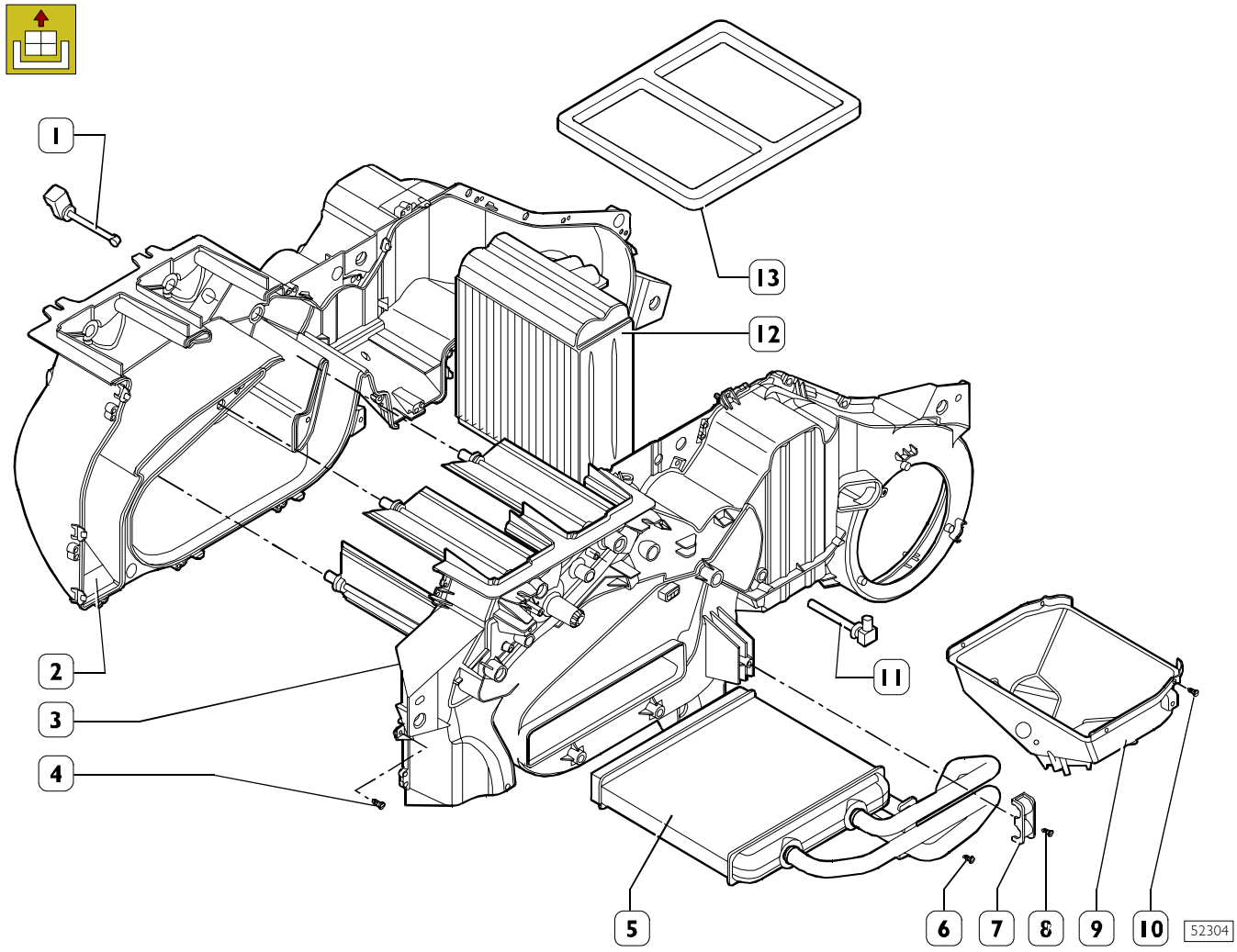

- ❑ Remove the heater/air-conditioner unit, following the procedure described in the above figures.
- ❑ Disconnect the electrical connections from the actuators and sensors.
- ❑ Lift up and remove the temperature sensors (1) and (11).
- ❑ Remove the adhesive strip from the duct connection bay, unscrew the fixing screws (10) and take out the moulding (9) complete with drain pipe and control unit.
- ❑ Unscrew the screws securing the pipe (6), the screw (8) securing the bolt (7) and carefully remove the radiator (5) from the heater.
- ❑ Unscrew the fixing screws (4) and separate the front (3) and rear (2) boxes.
- ❑ Remove the air duct gasket (13).
- ❑ Take out the evaporator unit (12) with the expansion valve and pipe.

Refitting

For refitting, carry out the procedure described for removal in reverse order, taking care to replace the radiator and evaporator gaskets if they are damaged.

553233 EXPANSION VALVE AND EVAPORATOR PIPE

Removal - Refitting
Removal

Figure 39

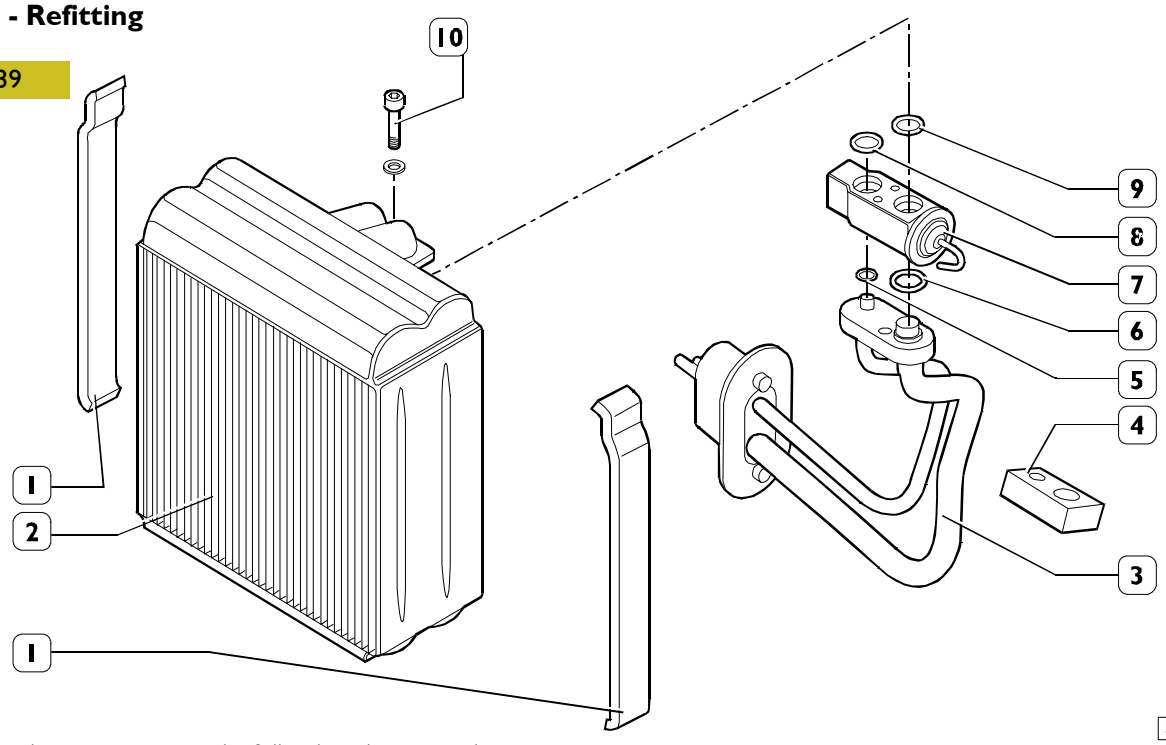

- ❑ Remove the evaporator unit, following the procedure described above.
- ❑ Remove the seals (1) and (4) from the evaporator (2) from the pipe (3), if they are damaged replace them when refitting.
- ❑ Unscrew the fixing screws (10) and remove the expansion valve (7), O-rings (5), (6), (8), (9) and the pipe (3).

Refitting

For refitting, carry out the procedure described for removal in reverse order, taking care to replace the radiator and evaporator gaskets if they are damaged. Check the state of wear of the seals. They need to be replaced if they are damaged or worn.

553239 COMPRESSOR

Specifications and data

COMPRESSOR		
Type		SCO 8 C
Displacement	cm^3	80
Stroke	mm	33
Rev. No.: Max	RPM	7800
Refrigerant		R 134 a (ecological)
Oil type		ND - OIL 8
Refrigerant amount	kg	0.75
Oil amount		80 ± 20 cm^3
Airtightness test		3.14 MPa
Pressure test	High	530 MPa
	Low	250 MPa
ELECTROMAGNETIC FRICTION		
Torque	min	26 Nm
Voltage rating	V	12
Absorbed pressure	W	max 35
Weight	kg	1.5
Belt		4k-type
Pulley actual diameter	mm	105

Compressor Removal - Refitting
Removal

Figure 40

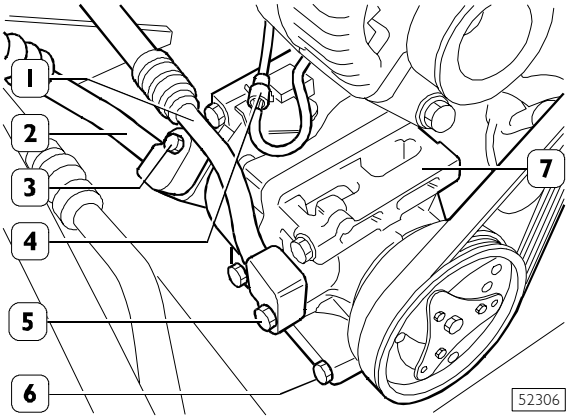

- ❑ Drain the air-conditioning system, following the procedure described under the relevant heading.
- ❑ Unscrew the fixing screws (3) and (5) and remove the inlet (2) and outlet (1) pipes from the compressor.
- ❑ Slacken the drive belt, following the instructions given under the relevant heading.
- ❑ Disconnect the electrical connection (4), unscrew the fixing screws (6) and remove the compressor (7) from the vehicle.

Refitting

For refitting, carry out the procedure described for removal in reverse order. Check the state of wear of the seals. They need to be replaced if they are damaged or worn.

553261 POLLEN FILTER

Removal - Refitting

Removal

Figure 41

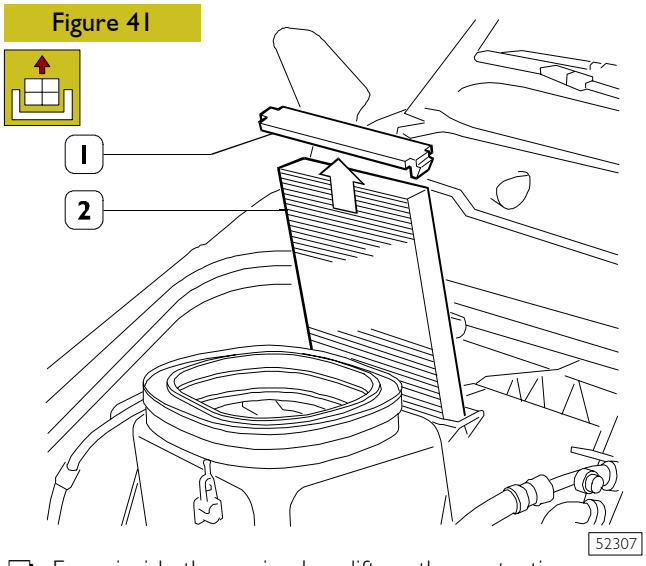

❑ From inside the engine bay, lift up the protective cover (1) and remove the pollen filter (2).

Refitting

For refitting, carry out the procedure described for removal in reverse order.

553235 THREE-LEVEL PRESSURE SWITCH AND DRIER FILTER

Removal - Refitting

Removal

Figure 42

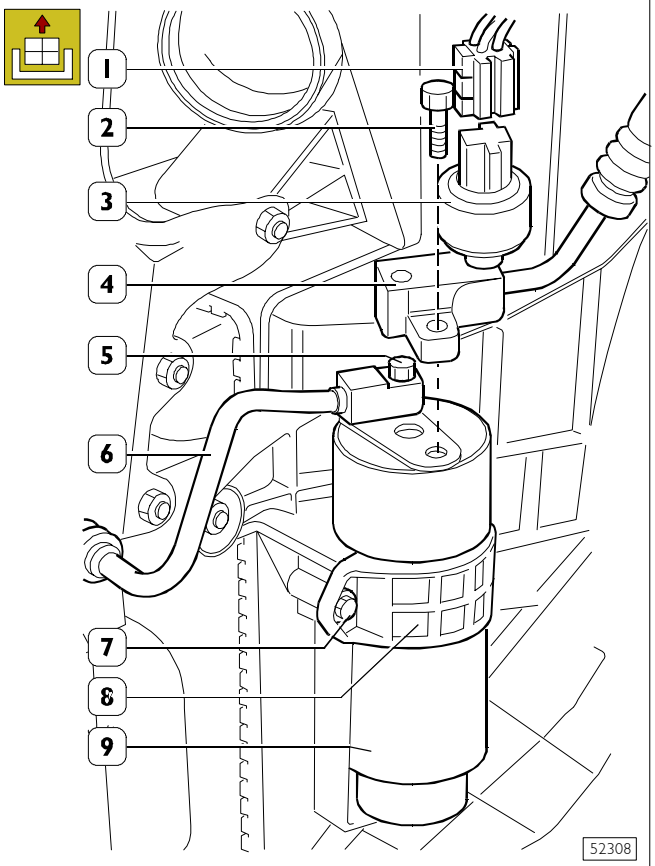

❑ Drain the air-conditioning system, following the procedure described above.

❑ Disconnect the electrical connection (1) of the three-level pressure switch (3).

❑ Unscrew the fixing screw (2) and remove the pipe (4), unscrew the fixing screw (5) and remove the pipe (6).

❑ Unscrew the screw (7) and loosen the bracket (8).

❑ Take the drier filter (9) out of its seat.

Refitting

For refitting, carry out the procedure described for removal in reverse order, checking the soundness and correct position of the seals on the pipes. They need to be replaced if they are damaged or worn.

553232 CONDENSER

Removal - Refitting

Removal

Figure 43

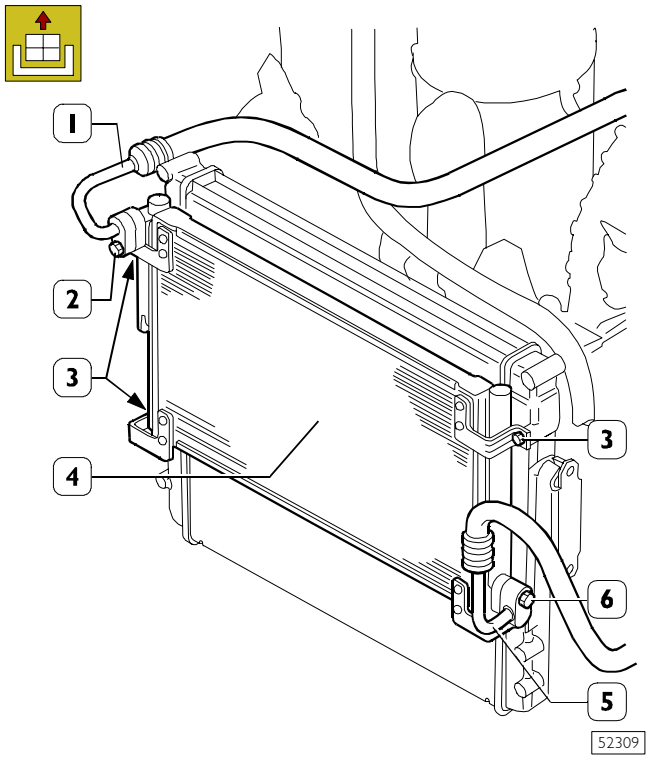

❑ Partially carry out the procedure for removing the engine until you can access the condenser, which is located in front of the radiator.

❑ Drain the air-conditioning system, following the procedure described above.

❑ Unscrew the screw (2) and remove the pipe (1), unscrew the screw (6) and remove the pipe (5).

❑ Unscrew the fixing screws (3) and remove the condenser (4).

Refitting

For refitting, carry out the procedure described for removal in reverse order, checking the soundness and correct position of the seals on the pipes. They need to be replaced if they are damaged or worn.

DIAGNOSTIC

FAILURES OF THE ELECTRIC TYPE (Marelli air-conditioner)

Self-diagnosis

Suitable control logics enable the control unit to memorise and to display certain system failures (constant and/or intermittent). In response to these failures, the control unit controls system operation by replacing the detected anomalous values with proper recovery values which guarantee minimum system operation.

When failure is detected, the control unit displays the message "Error Cli" on the instrument panel.

- To have a preliminary information, it is possible to display any detected failure on the instrument panel by following a special procedure.
- For a more complete and in-depth diagnosis it is however indispensable to use the service network testers, i.e.: MODUS (release 2.1) and IWT (Release 1.4).

Fan electric module control is not provided in self-diagnosis, it can therefore be detected with the available release only.

Diagnosis by error codes

To find the failing component proceed as follows:

- set temperature setting knob to **"HI"**;
- set fan speed control knob to **"0"**;
- set air distribution knob to **"MAX DEF"**.

Figure 44

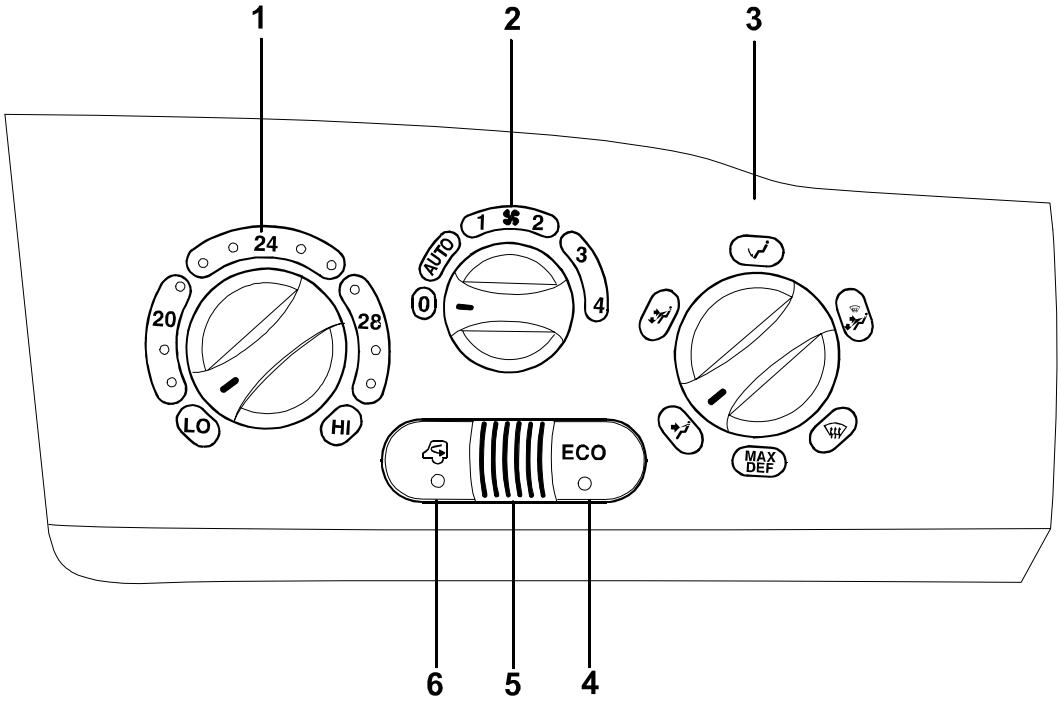

75450

1 Required temperature setting knob - 2 Fan speed control knob - 3 Air distribution knob - 4 "ECON" switch - 5 Air recycling switch

Figure 45

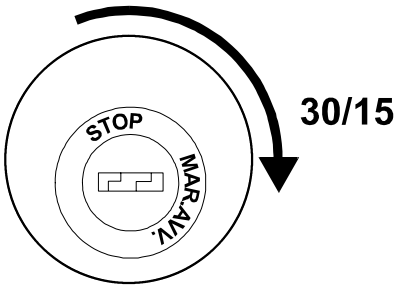

000277t

❑ Set key switch to service position (+15)

Figure 46

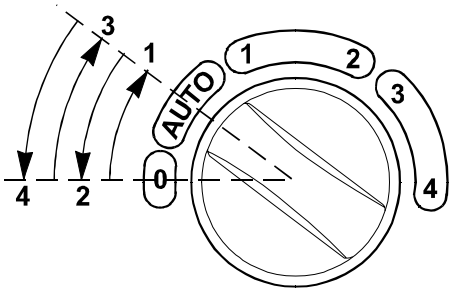

000278t

❑ Operate within 10 seconds, the fan speed control knob with the following sequence: **"0" ⇒ "AUTO" ⇒ "0" ⇒ "AUTO" ⇒ "0"**.

Figure 47

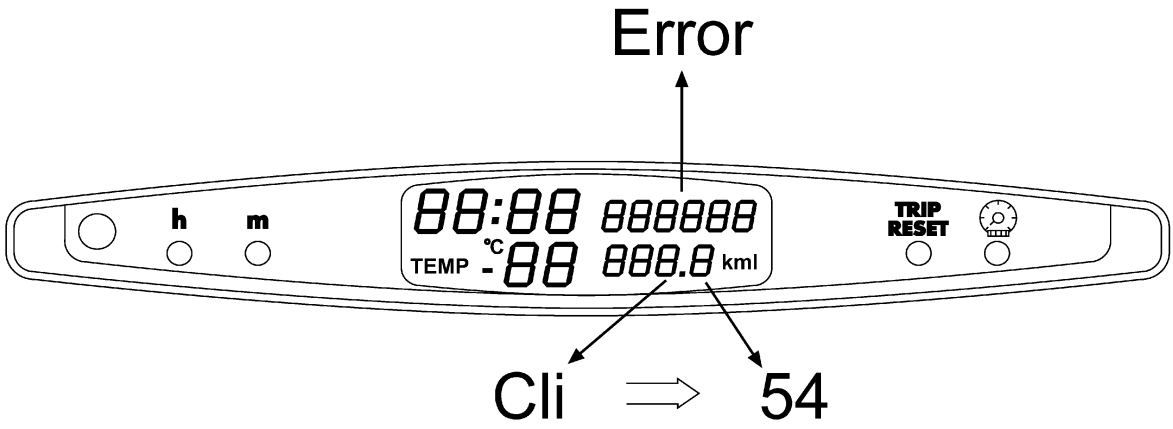

❑ Error code is now displayed on instrument panel.
Other errors, if any, are displayed every 3 seconds.

000279t

Error codes

Figure 48

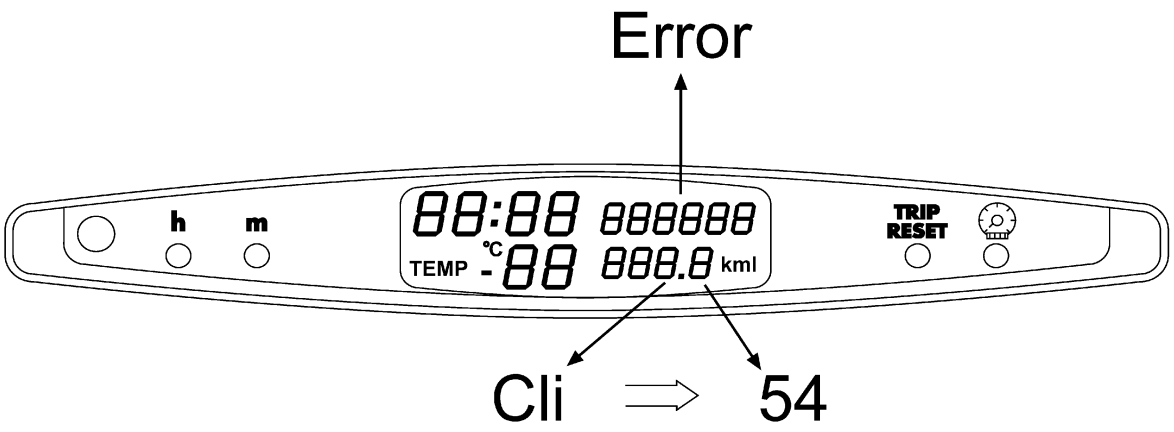

000279t

These are the error codes that can appear on the display of the panels during diagnosis in place of "Cli".

12	Blown air sensor circuit short to ground
14	Blown air sensor circuit open or short
32	Outside air temperature sensor positive short to ground
34	Outside air temperature sensor circuit open or short
42	Inside air temperature sensor positive short to ground
44	Inside air temperature sensor circuit open or short
52	Evaporator temperature sensor positive short to ground
54	Evaporator temperature sensor circuit open or short
65	Air mixing ratio-motor malfunctioning
82	Required temperature potentiometer positive short to ground
84	Required temperature potentiometer circuit open or short
92	Ventilation control potentiometer positive short to ground
94	Ventilation control potentiometer circuit open or short
B2	Air mixing potentiometer signal positive short to ground
B4	Air mixing potentiometer signal circuit open or short
D5	Fan control electronic module malfunctioning
E2	Potentiometer powering 10 ECU pin positive short to ground
E3	Potentiometer powering 10 ECU pin short to positive
F6	Supply voltage higher than max. limit
F7	Supply voltage lower than min. limit

Diagnosis by IWT, MODUS and UNITESTER

Figure 49

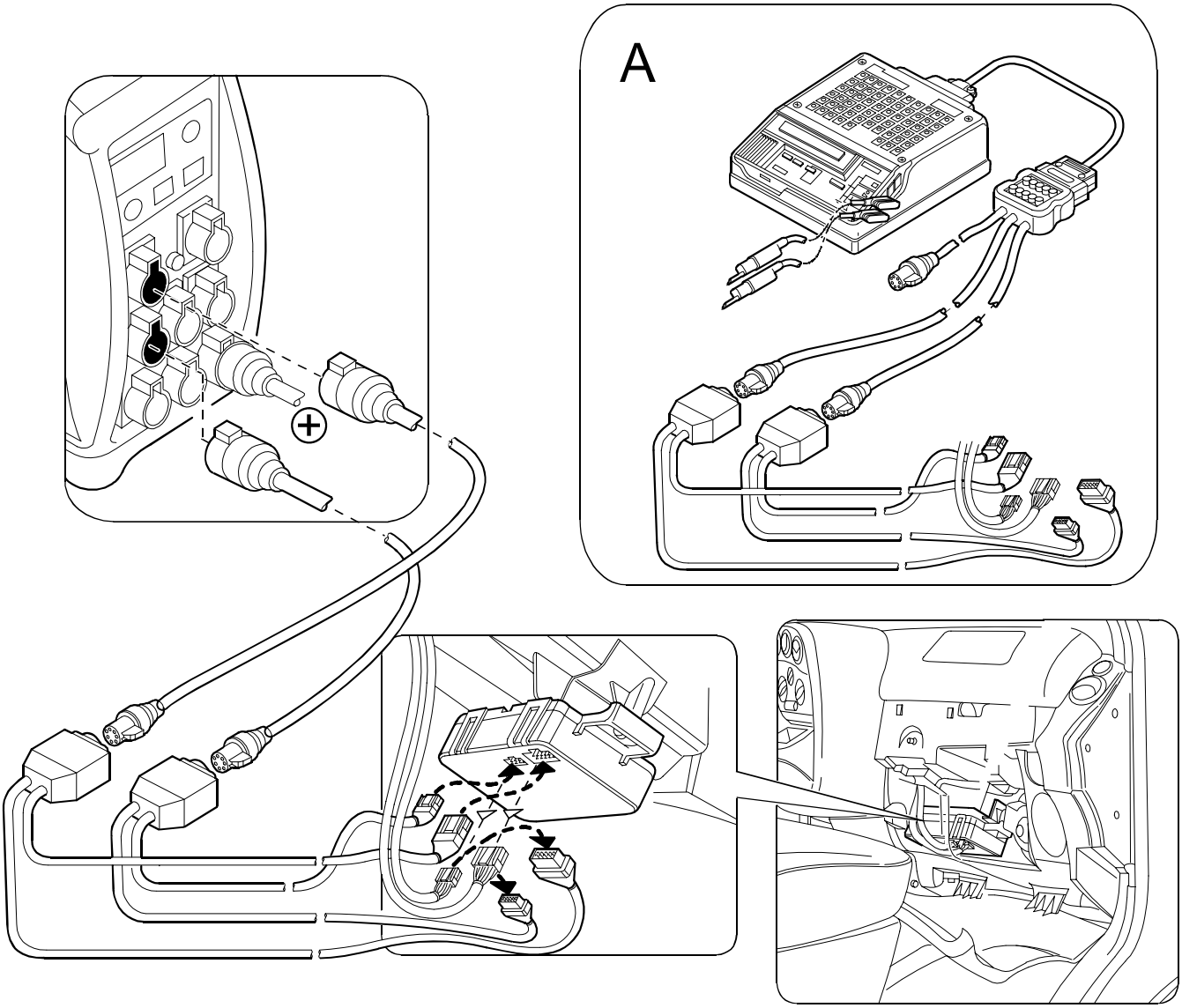

The above figure shows 99331048 ER1 + ER2 tool connection to ventilation and heating system ECU and to IWT.
Detail (A) shows IVECO TESTER connection.

IWT can measure lines on control unit wiring and pin-out.
With MODUS, this measurement can only be performed using UNITESTER.

Diagnosis by IWT
Preliminary operations

IWT software memorises the list of components and the relevant failures and enables their reading on the particular screen displays. It also enables to analyse for every type of failure the measurement in Kohm or Mohm for every component circuit and it displays in any case the optimum operation parameters.

It also displays operation procedure by the **REPAIR** function.

Repair manual using IWT will be added in next edition.

It is however important to remind that before proceeding with troubleshooting diagnosis, the following three main factors shall be checked:

1. Identification:

Check and prove control unit identity consistency between vehicle and IWT data.

If the control unit is not of the preset type, "**not compatible control unit**" message is displayed.

Therefore, diagnosis cannot be correct.

Figure 50

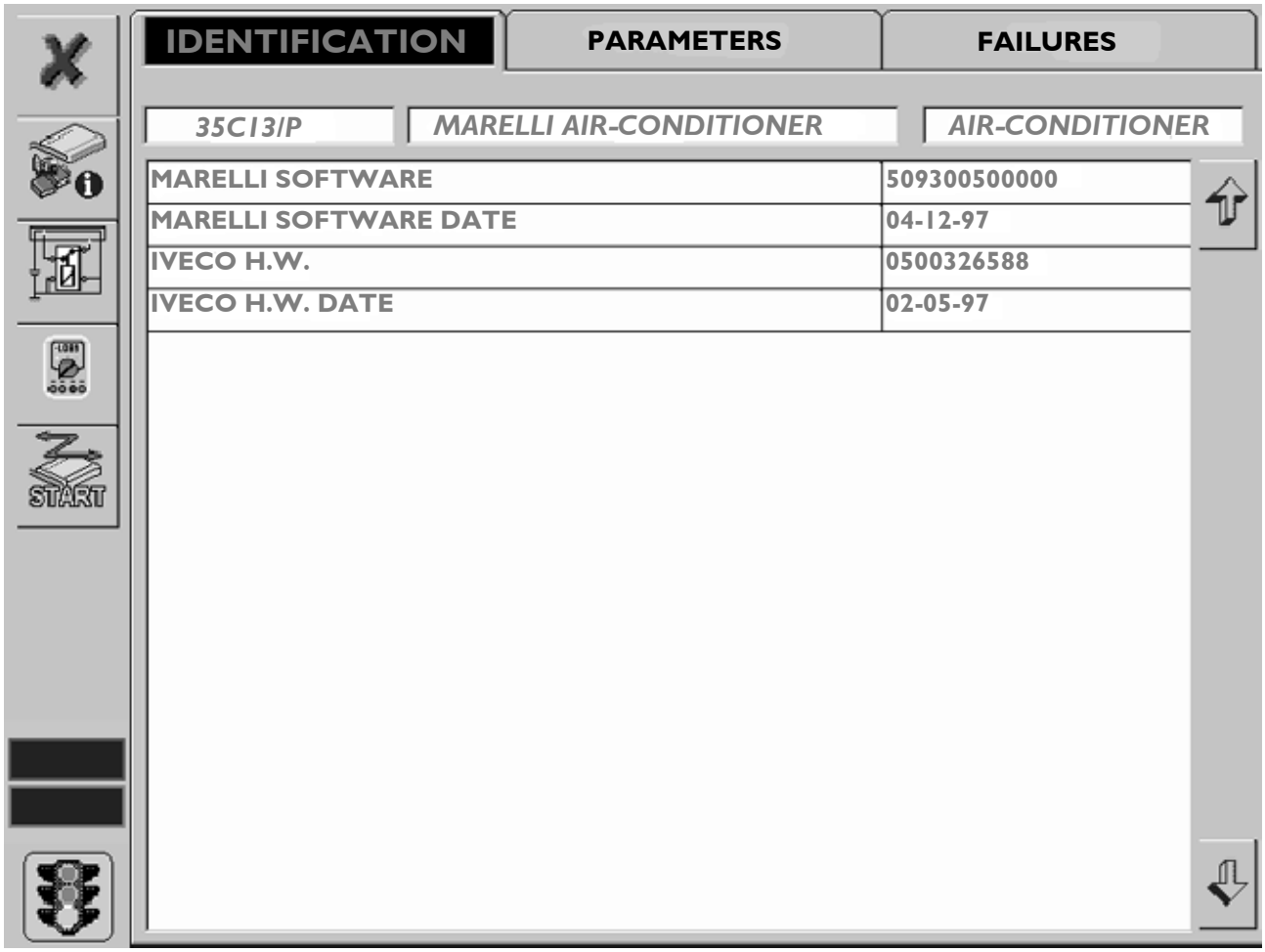

61546

2. Failures:

If failures are found, follow repair procedure shown on the screen display using the proper icons.

If no failure is found, perform check by screen display "PARAMETERS" (see point 3).

Figure 51

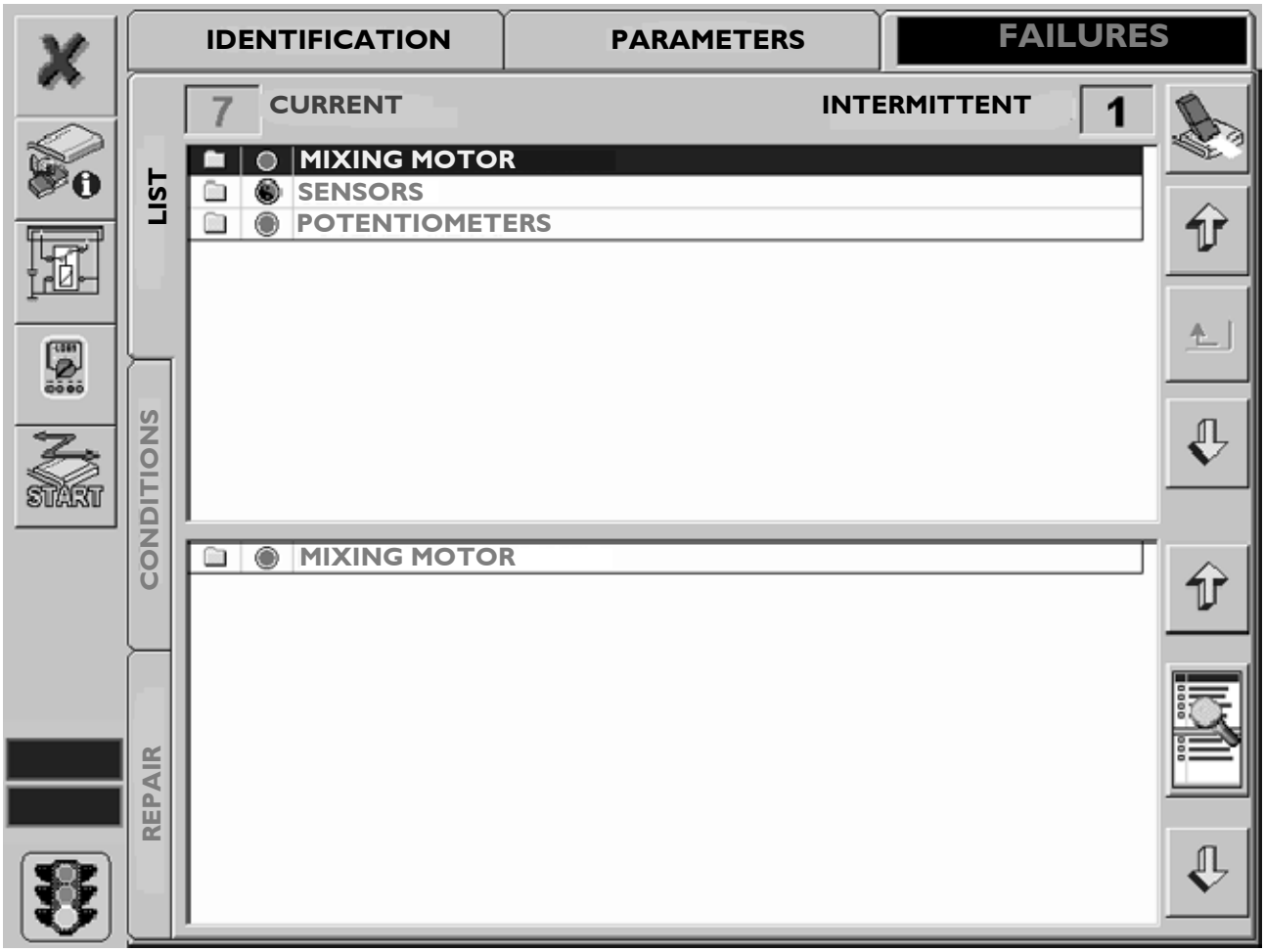

61547

3. Parameters:

Check for system response by operating vehicle controls until finding the control which gives no signal on IWT screen display. The following parameters are also checked:

- ❑ COMPRESSOR, RECYCLE, MAX DEF

Figure 52

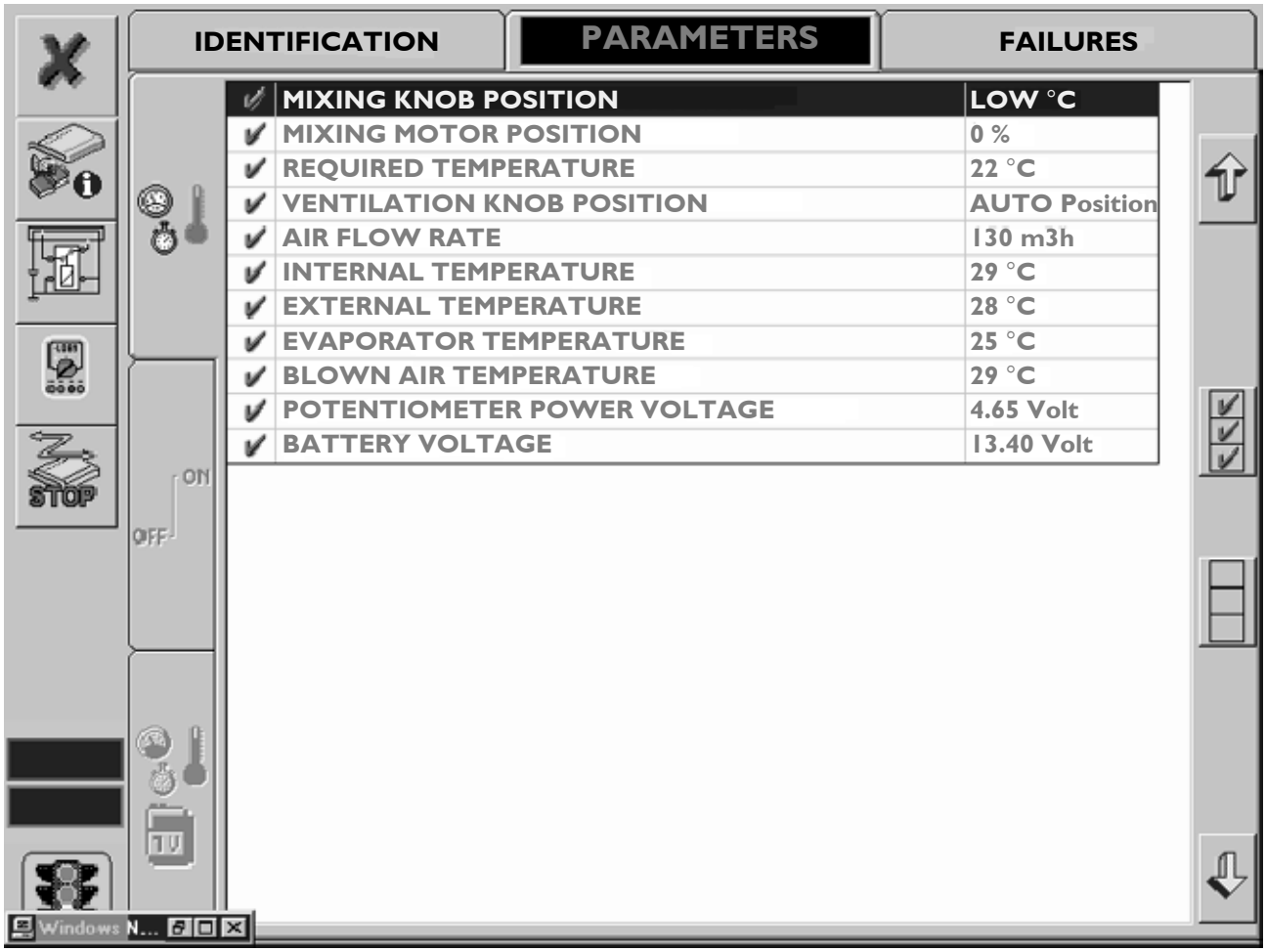

Figure 53

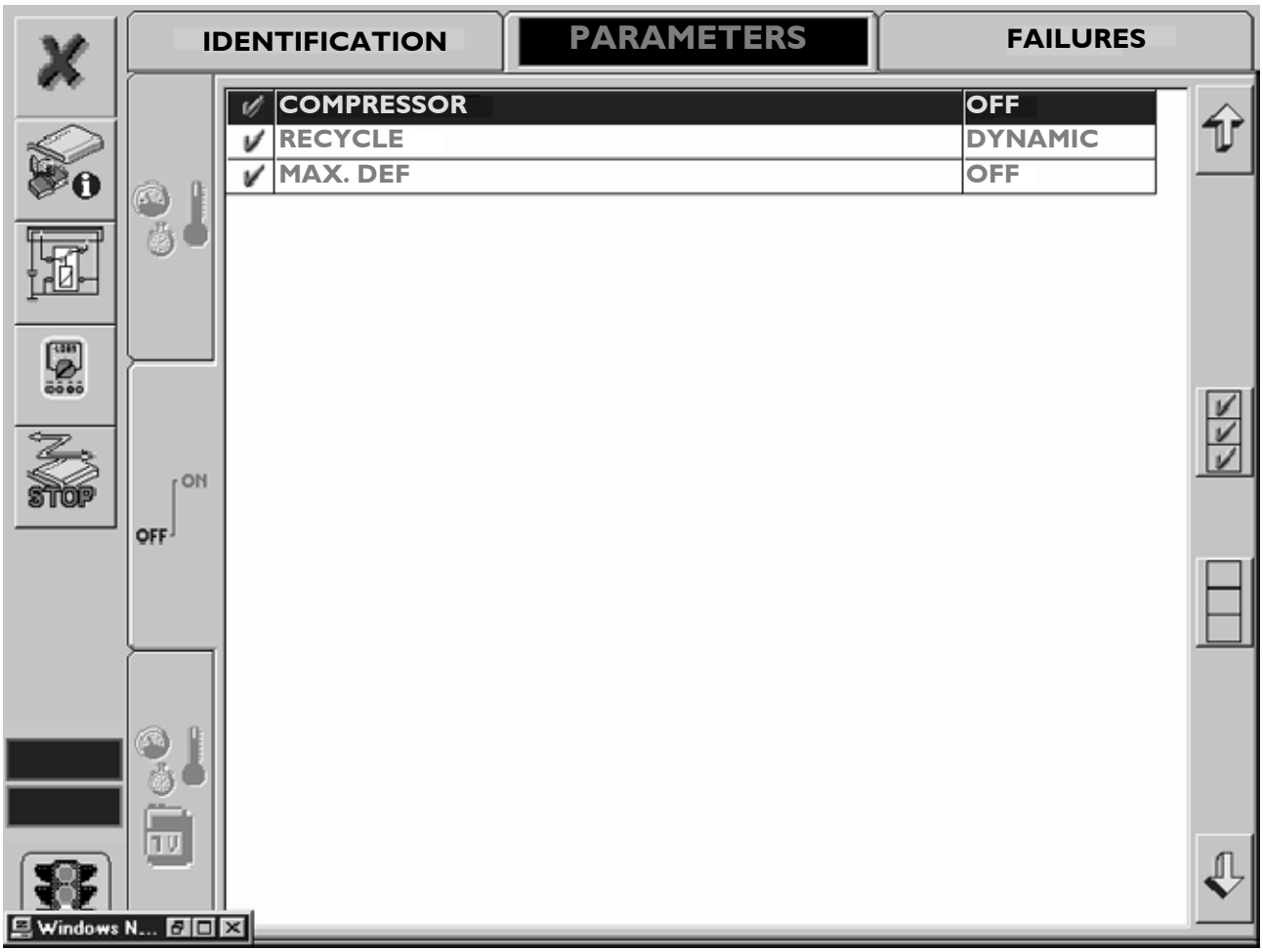

61549

FAILURE OF THE MECHANICAL TYPE

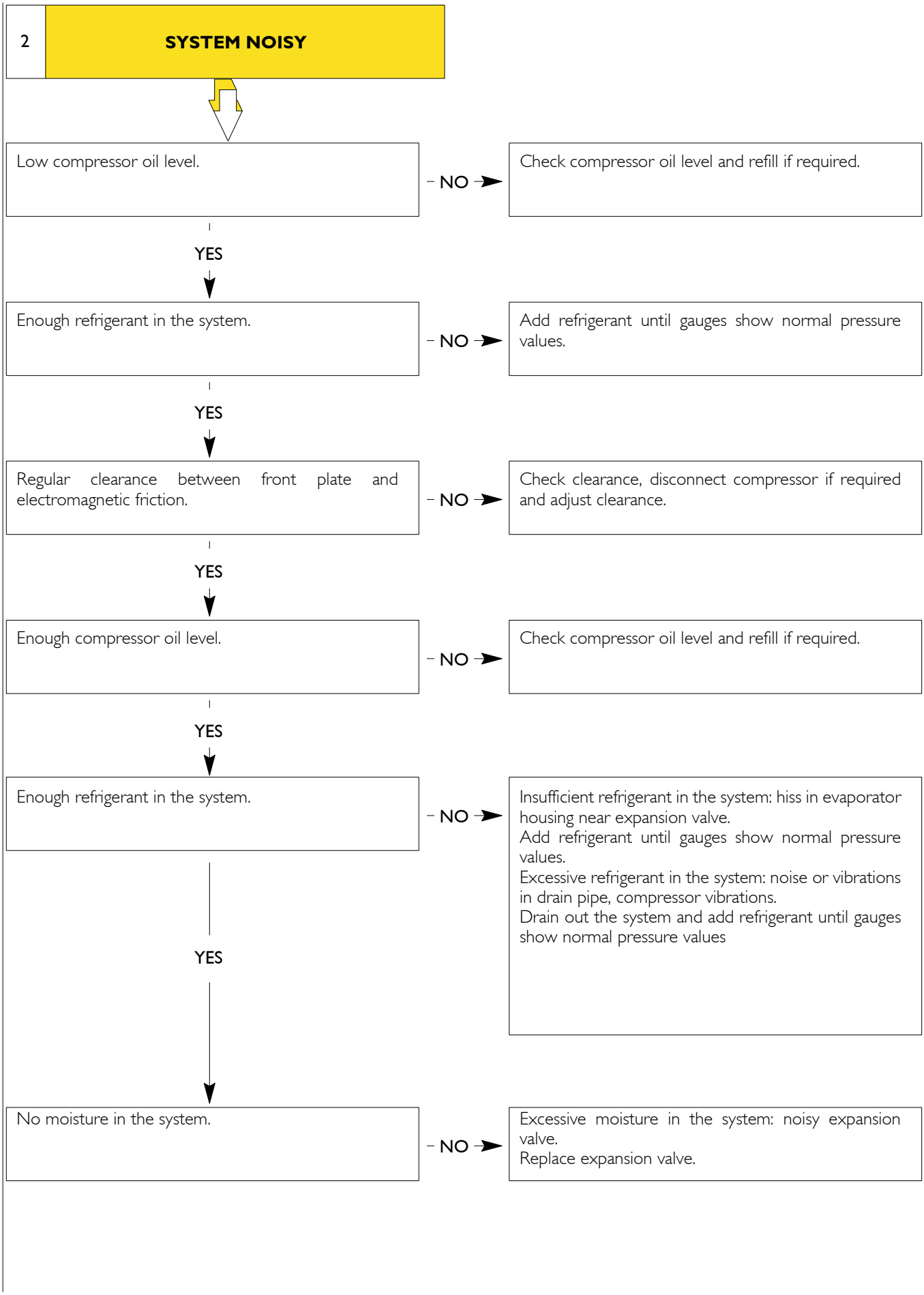

Proper system sealing. – NO → Check system and compressor and remove refrigerant leakage, if any.

YES

Proper electromagnetic friction operation. – NO → Check friction electrical connections and replace the electromagnetic friction if required.

4.1 COMPRESSOR NOISE

Compressor drive belt in good conditions. – NO → Replace drive belt.

YES

Compressor drive belt in normal working conditions. – NO → Check and adjust belt tension.

YES

Proper compressor screws and bolts tightening. – NO → Check and tighten compressor screws and bolts.

YES

Serviceable compressor. – NO → Drain out system and replace compressor.

YES

Serviceable electromagnetic friction pulley bearing. – NO → Check pulley sliding and replace it if required.

YES

Serviceable belt tensioner. – NO → Replace belt tensioner.

(continued)

4.2 STRANGE NOISE WITH FRICTION CONNECTED

Compressor fixing elements are in good conditions.
– NO → Check and tighten compressor screws and bolts to the prescribed torque.

YES

Serviceable electromagnetic friction.
– NO → Check whether failure is due to mechanical or electrical troubles and operate accordingly.

YES

Regular compressor oil level.
– NO → Check oil level and refill if required.

YES

Serviceable compressor.
– NO → Drain out system and replace compressor.

4.3 STRANGE NOISE WITH FRICTION DISCONNECTED OR VIBRATIONS

Proper clearance between front plate and electromagnetic friction pulley.
– NO → Check clearance, disconnect compressor if required and adjust clearance

YES

Serviceable electromagnetic friction power system.
– NO → Check electric system.

553210 "MARELLI" TYPE HEATER
Removal - Refitting

Removal

For removing/refitting the heater unit, carry out the procedure described on pages 13 and 14 concerning heater/fan unit removal and refitting, taking into consideration just the common parts: dashboard covering, instrument panel, control, air outlets, refrigerant tank and pipes, radio mounting box and cross member.

Remove the control panel shown in the figure before performing the following removals:

- ❑ withdraw air recycle control selector (2);
- ❑ take off the heater control panel knob (3);
- ❑ unscrew screw (4) set behind the panel;
- ❑ disconnect connection (6) and remove mask (5) by removing it from velcro (⇒) fixing;
- ❑ remove the two screws (1) fixing controls to dashboard;
- ❑ then remove the complete unit (7) including controls (6) from the passenger compartment.

Refitting

For refitting, carry out the procedure described for removal in reverse order and observing the prescribed tightening torque for screws and/or nuts. When refitting procedure is over, check the following:

- ❑ proper engine coolant level;
- ❑ regular operation of system and components involved in the described procedure.

Figure 54

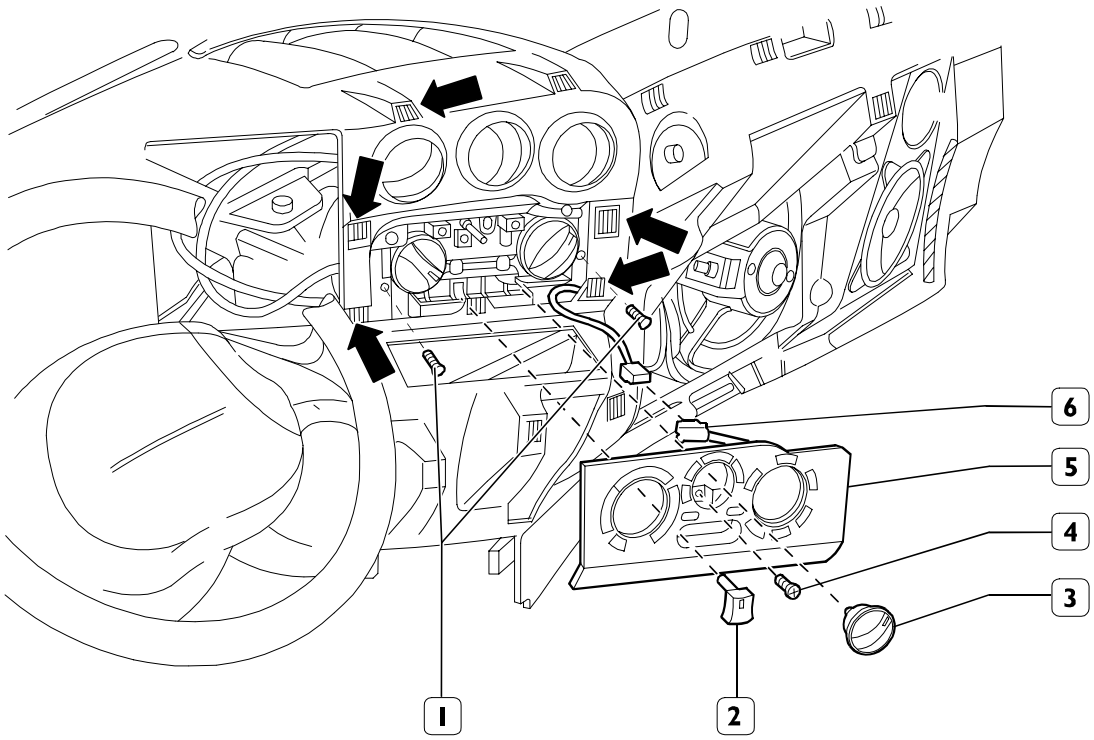

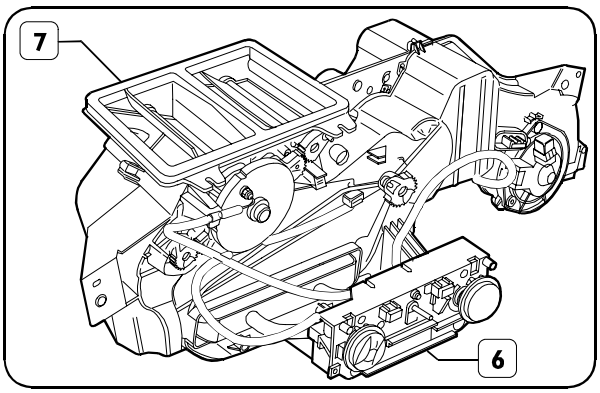

60727

553213 ELECTRIC FAN
Removal - Refitting

Removal

- ❑ Remove lower covering (1) on passenger side from velcro fixings;
- ❑ unscrew the three M4x12 fan fixing screws (3);
- ❑ disconnect electrical connections (2);
- ❑ remove motor support (4) including the fan;
- ❑ remove frame (7) and connector (8) bracket fixings (6);
- ❑ remove fan (5) after removing both M5x16 motor fixings (9).

Refitting

For fan refitting, carry out the procedure described for removal in reverse order. Replace seal if damaged.

Figure 55

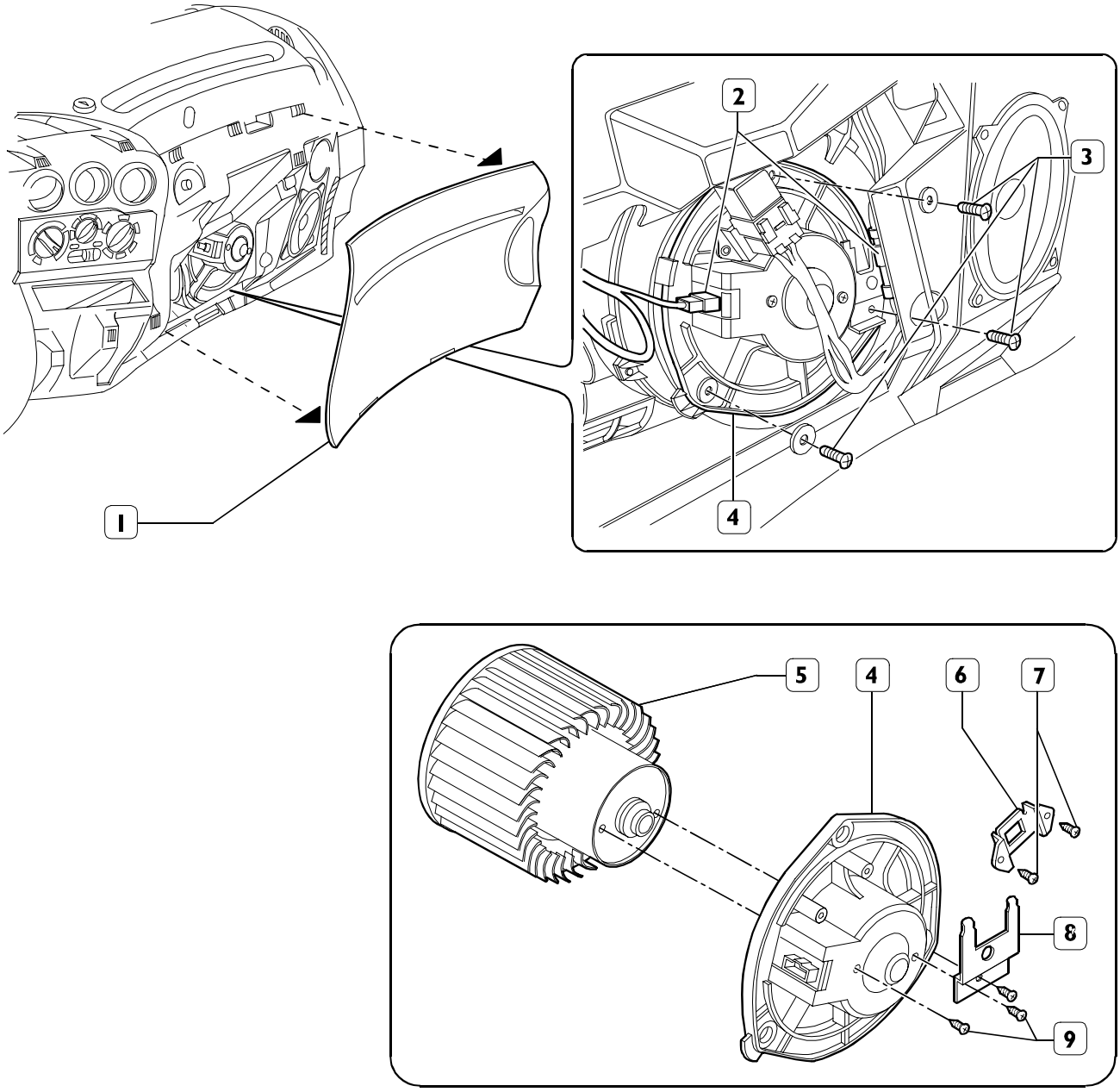

553218 HEATER CONTROL CABLES
Removal - Refitting

Figure 56

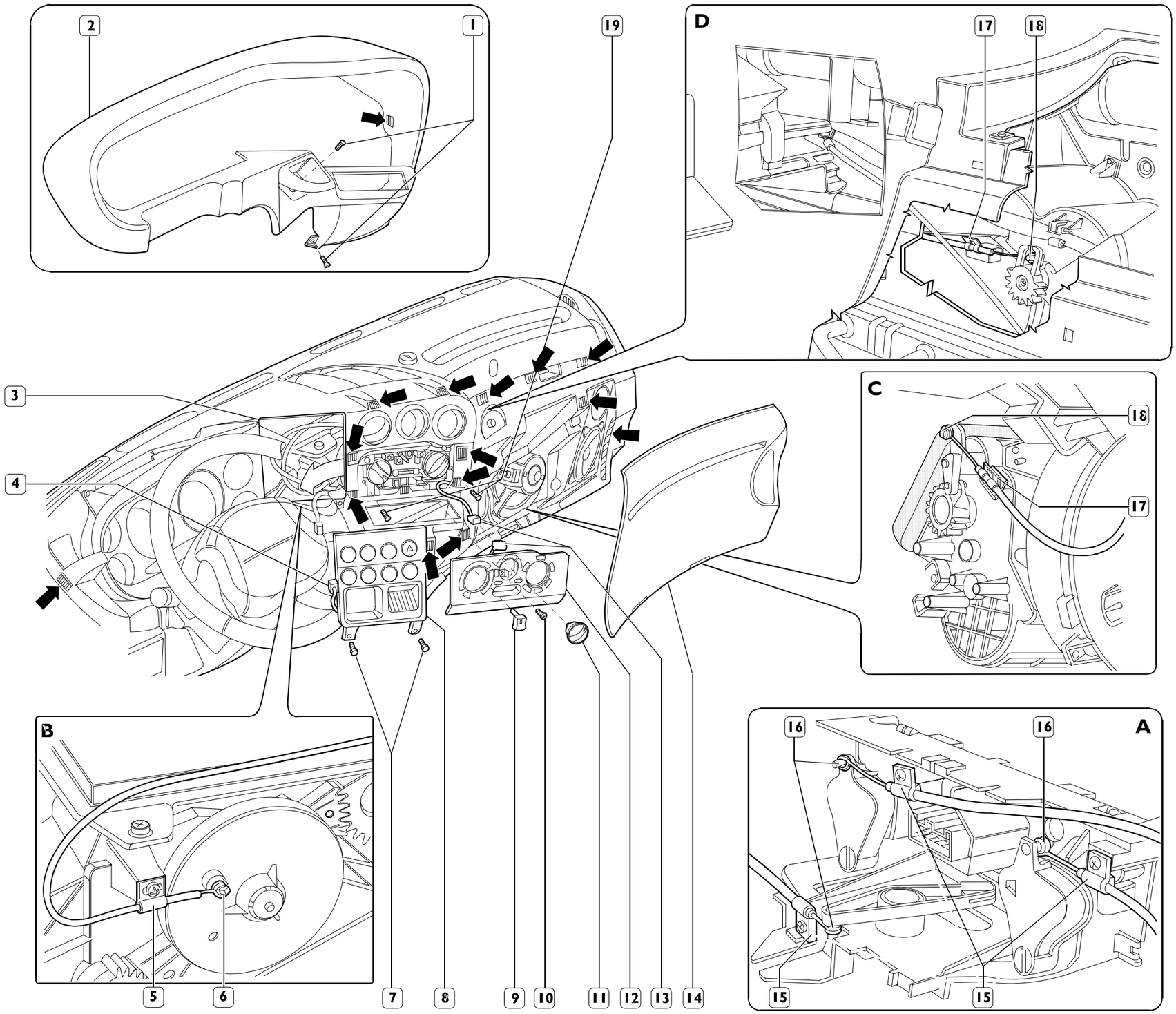

Removal

- ❑ First of all disconnect battery cables;
- ❑ remove dashboard lower covering (14) on passenger side from velcro fixings (⇐) and release it from hinges;
- ❑ remove dashboard (2) covering from velcro fixings after unscrewing fixing screws (1);
- ❑ remove switch panel (8) after unscrewing fixing screws (7) and disconnecting electrical connections (4);
- ❑ lift off heater control knob (11);
- ❑ unscrew screw (10) set behind knob (11);
- ❑ detach air recycle cursor (9);
- ❑ remove control mask (12) from velcro fixings after disconnecting electrical connection (13).
- ❑ To facilitate control unit removal from compartment proceed as follows:
- ❑ unscrew the two screws (19) fixing the unit to the dashboard;
- ❑ remove control unit from compartment (3) set neat multiple meter;
- ❑ remove the three cables from control unit by releasing them from clamps (15) and pins (16). (Detail A);
- ❑ remove cables from heater unit (Details B-C-D) by releasing them from clamps (5) (17) and pins (6) and (18).

Refitting

For refitting, carry out the procedure described for removal in reverse order. Check for matching between doors and control knobs.

Figure 57

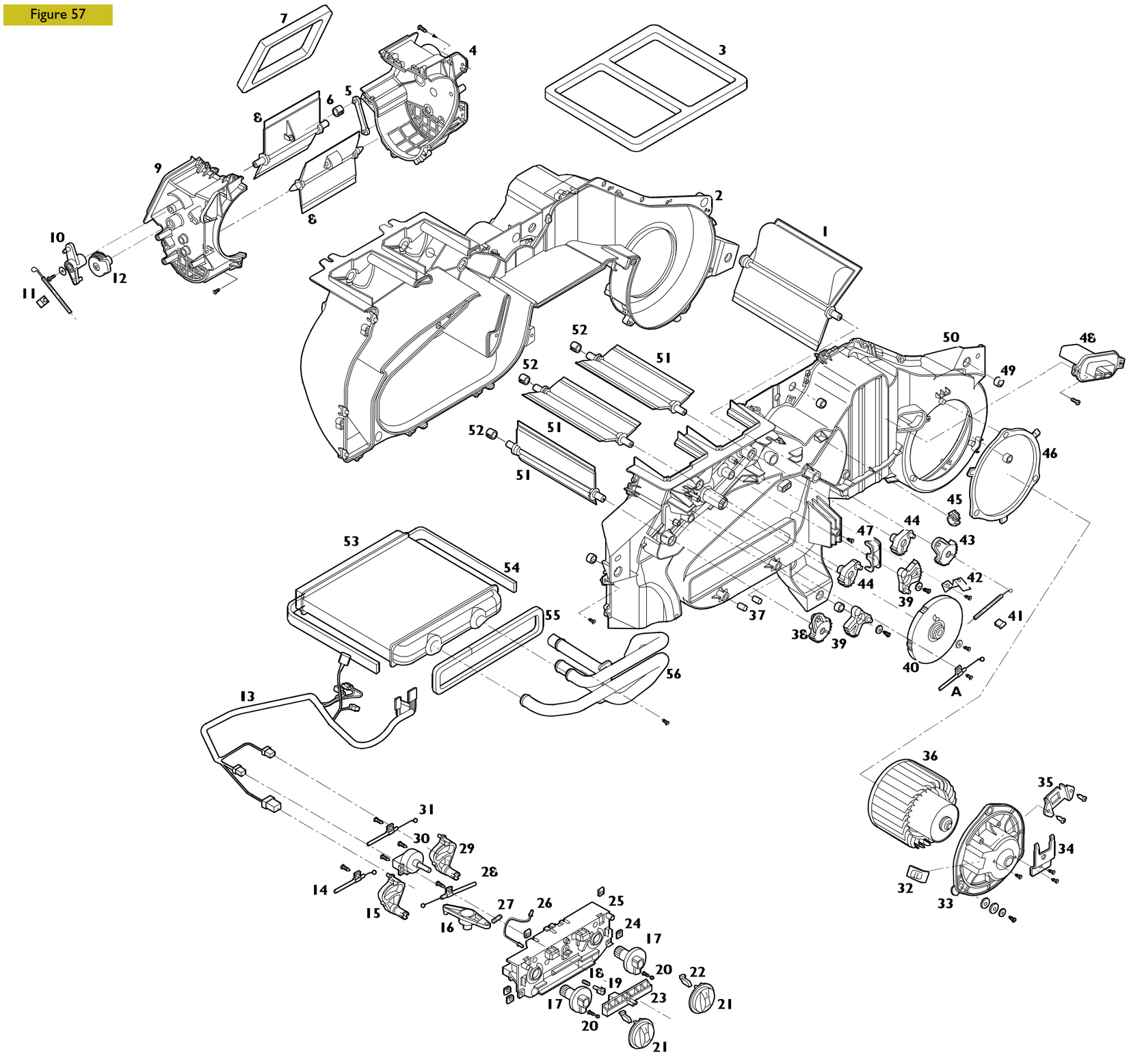

60920

553210 HEATER UNIT

Components

1. Complete distribution door - 2. Rear box - 3. Pipe strip - 4. RH air intake box - 5. Tie rod - 6. Distribution bushing - 7. Strip on A.I. flange - 8. Doors - 9. LH air intake box - 10. Recycle air intake control transmission - 11. Bowden clip - 12. A.I. door lever - 13. Wiring - 14. Mixing flexible transmission - 15. Mixing control lever - 16. Recycle air intake lever - 17. Control pin - 18. Spring - 19. Cap - 20. Cap, cap spring - 21. Complete distribution - temperature knob - 22. Knob prism - 23. Recycle air intake cursor - 24. Clamp - 25. Control mounting - 26. Light guide cable - 27. Connecting rod - 28. I.A.- REC flexible transmission - 29. Distribution control lever - 30. Switch - 31. Distribution flexible transmission - 32. Connection cover - 33. Motor mounting - 34. Connector bracket - 35. Frame bracket - 36. Electric fan - 37. Self-tapping insert - 38. Mixing/foot door lever - 39. Transmission - 40. Distribution cam - 41. Mixing bowden clamp - 42. Control fixing bracket - 43. Mixing/foot door lever - 44. Vent/def door lever - 45. Wiring retainer clamp - 46. Fan strip - 47. Water pipe fixing U-bolt - 48. 4-speed resistor - 49. Bushing - 50. Front box - 51. Complete distribution door - 52. Distribution bushing - 53. Radiating mass - 54. Side gasket - 55. Gasket on tub - 56. Water pipe assembly. - A. Flexible transmission.

Passenger's compartment heating and ventilation system

Page

SAFETY STANDARDS TO OBSERVE WHEN WORKING ON VEHICLES EQUIPPED WITH THE AIR-BAG SYSTEM 53

PASSENGER'S COMPARTMENT HEATING AND VENTILATION SYSTEM 53

❑ General 53

VENTILATION 53

❑ Description 53

FUNCTIONAL DIAGRAM AND MAIN HEATING AND VENTILATION SYSTEM COMPONENTS 54

HEATING AND VENTILATION SYSTEM 54

❑ Description 54

❑ Air-conditioning 54

❑ Heating 54

ADDITIONAL COOLING SYSTEM CONTROLS AND AIR VENTS LAYOUT 55

DESCRIPTION 55

ADDITIONAL HEATING SYSTEM CONTROLS . 56

DESCRIPTION 56

ADDITIONAL COOLING UNIT 57

❑ Removal - Refitting 57

❑ Removal 57

❑ Refitting 57

ADDITIONAL HEATER UNIT 58

❑ Removal - Refitting 58

❑ Removal 58

❑ Refitting 58

ADDITIONAL HEATER CIRCUIT ENABLING SOLENOID VALVE 59

❑ Removal - Refitting 59

❑ Removal 59

❑ Refitting 59

DDD

SAFETY STANDARDS TO OBSERVE WHEN WORKING ON VEHICLES EQUIPPED WITH THE AIR-BAG SYSTEM

Before doing any work, you MUST observe the SAFETY rules given in section 10 "Steering system"

PASSENGER'S COMPARTMENT HEATING AND VENTILATION SYSTEM

NOTE: The following pages describe the heating and ventilation system variations for COMBI versions with OPT. 6652 - 6658.

General

Purpose of the heating and ventilation system is to enhance comfort inside the cab as regards the following parameters:

- temperature and relative humidity of outside air;
- temperature and relative humidity in the cab.

The system subjects the air to thermodynamic transformations that affect its temperature, relative humidity and purity. This is accomplished through the following functions:

- ventilation, i.e.: air taken from the outside (therefore with temperature and humidity of the surrounding environment) is blown into the cab;
- air-conditioning, i.e.: air cooling and dehumidification, with the possibility of heating it afterwards as preferred in order to change temperature and humidity in the cab.

VENTILATION
Description

The ventilation function provides the intake of outside air, purified from pollen and dust through a proper filter provided for the purpose, or air recirculation inside the passenger's compartment.

The system consists of the following:

- heater / heater fan unit, set under the driver's panel covering that also includes a part of the heating and ventilation system components.
- additional heater fan, adjustable at different speeds to provide air flowing inside the passenger's compartment under whatever conditions of use.
- air ducts (fresh air intake and air recirculation).
- additional air heater, set at the base of the last rear seat row.

Figure 58

Inlet air
Cool air
Warm air
Conditioned air
A Air flowing out the vehicle

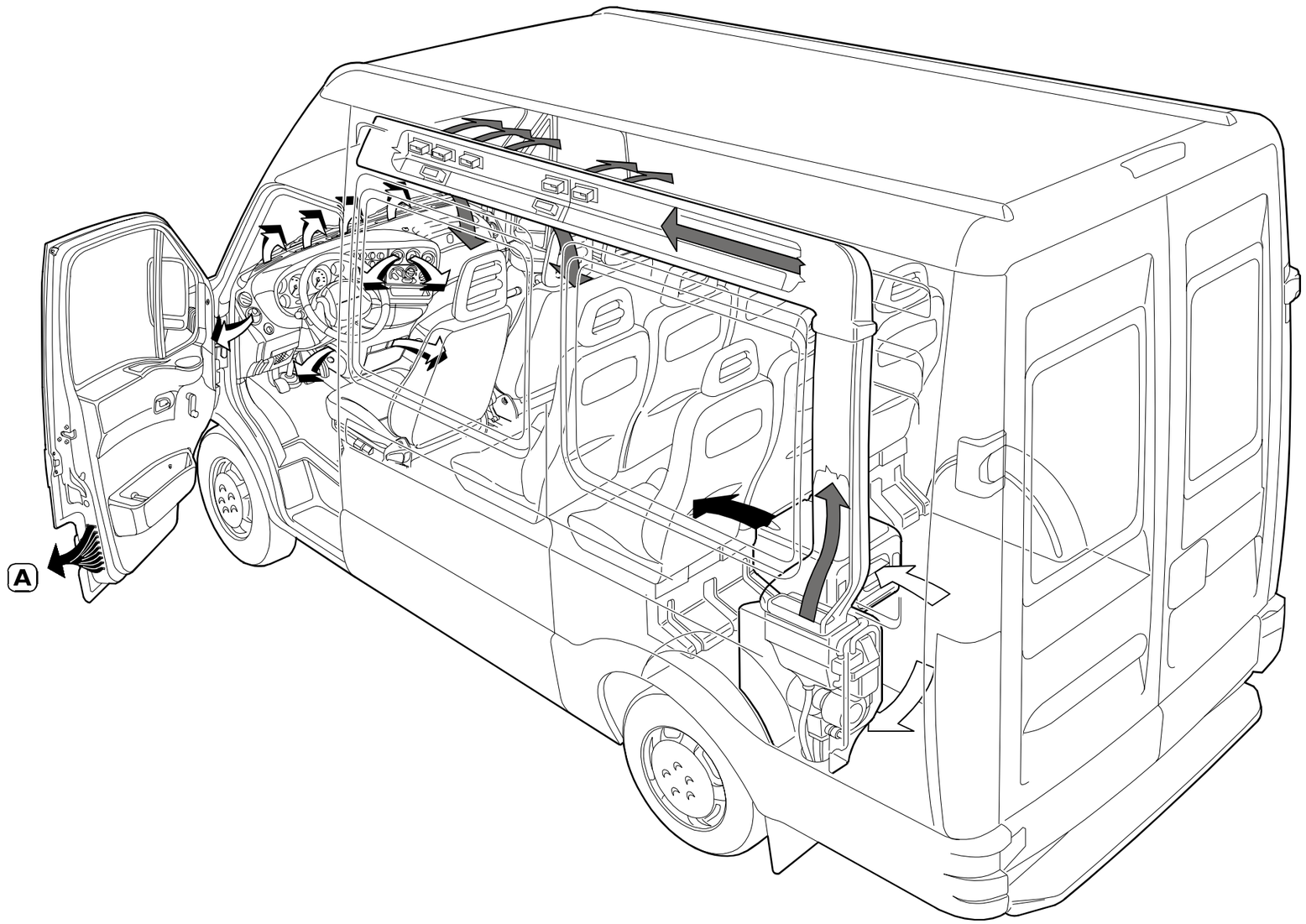

PASSENGER'S COMPARTMENT VENTILATION DIAGRAM

86412

HEATING AND VENTILATION SYSTEM

Description

This is accomplished by combining an air-conditioning system with a heating system.

This integration enables to change temperature and relative humidity inside the passenger's compartment.

Air-conditioning

Air-conditioning is accomplished by taking advantage of the power of certain "cooling" gases to lower temperature considerably at their expansion stage, thereby enabling to absorb heat from the passenger's compartment.

This condition is obtained by two different pressure levels (high pressure when coolant is at liquid state and low pressure when coolant is at gaseous state) that are established and maintained during system operation.

Heating

Heating is implemented through a radiator, located in the heater unit, where engine coolant flows.

Special doors let air flow through the radiator only when the heating function is activated.

The main heating and ventilation system components are the following:

- ❑ compressor (4);
- ❑ condenser (1);
- ❑ drier filter (2);
- ❑ three-level pressure switch (3);
- ❑ expansion valve (13);
- ❑ evaporator (12);
- ❑ heater/heater fan unit (5);
- ❑ pollen filter (14);
- ❑ cooler/heater fan unit (8-9) set in the rear area of the passenger's compartment;
- ❑ passenger's compartment conditioning circuit enabling solenoid valve (6);
- ❑ additional cooler expansion valve;
- ❑ heater/additional heater fan unit (10-11), set in the rear area of the passenger's compartment;
- ❑ additional heater circuit enabling solenoid valve (15);

FUNCTIONAL DIAGRAM AND MAIN HEATING AND VENTILATION SYSTEM COMPONENTS

Figure 59

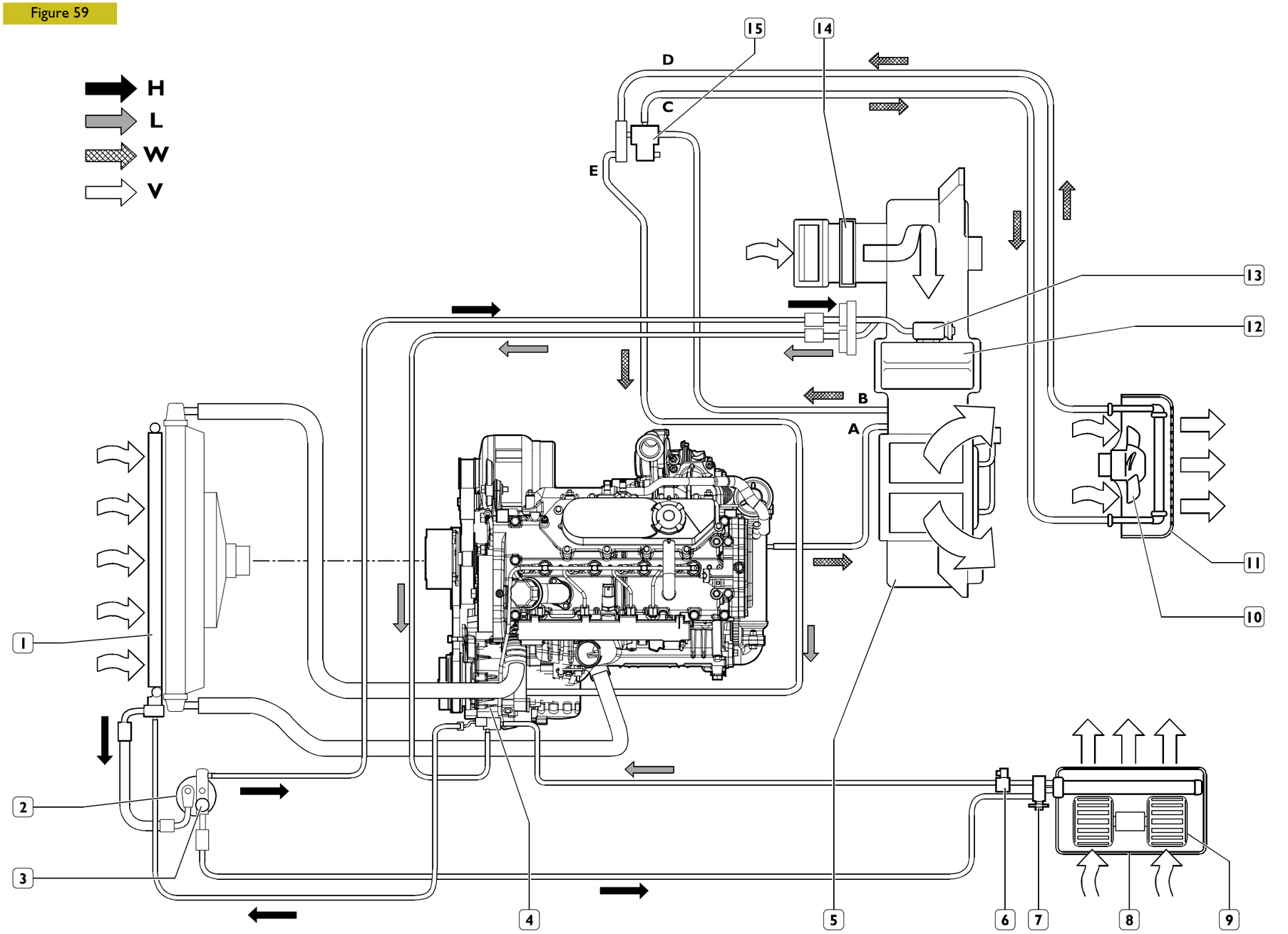

A. Coolant inlet to heater - B. Coolant outlet from heater - C. Coolant delivery to additional heater - D. Coolant return from additional heater - E. Coolant return to engine - H. Heating and ventilation system high pressure circuit - L. Heating and ventilation system low pressure circuit - W. Engine coolant circuit for passenger's compartment heating - V. Ventilation flow.

1. Condenser - 2. Drier filter - 3. Three-level pressure switch - 4. Compressor - 5. Heater/heater fan unit - 6. Solenoid valve - 7. Expansion valve - 8. Additional cooler 1. Additional heater fan - 10. Additional heater - 11. Additional heater fan - 12. Cooler - 13. Expansion valve - 14. Pollen filter - 15. Solenoid valve.

ADDITIONAL COOLING SYSTEM CONTROLS AND AIR VENTS LAYOUT

Figure 60

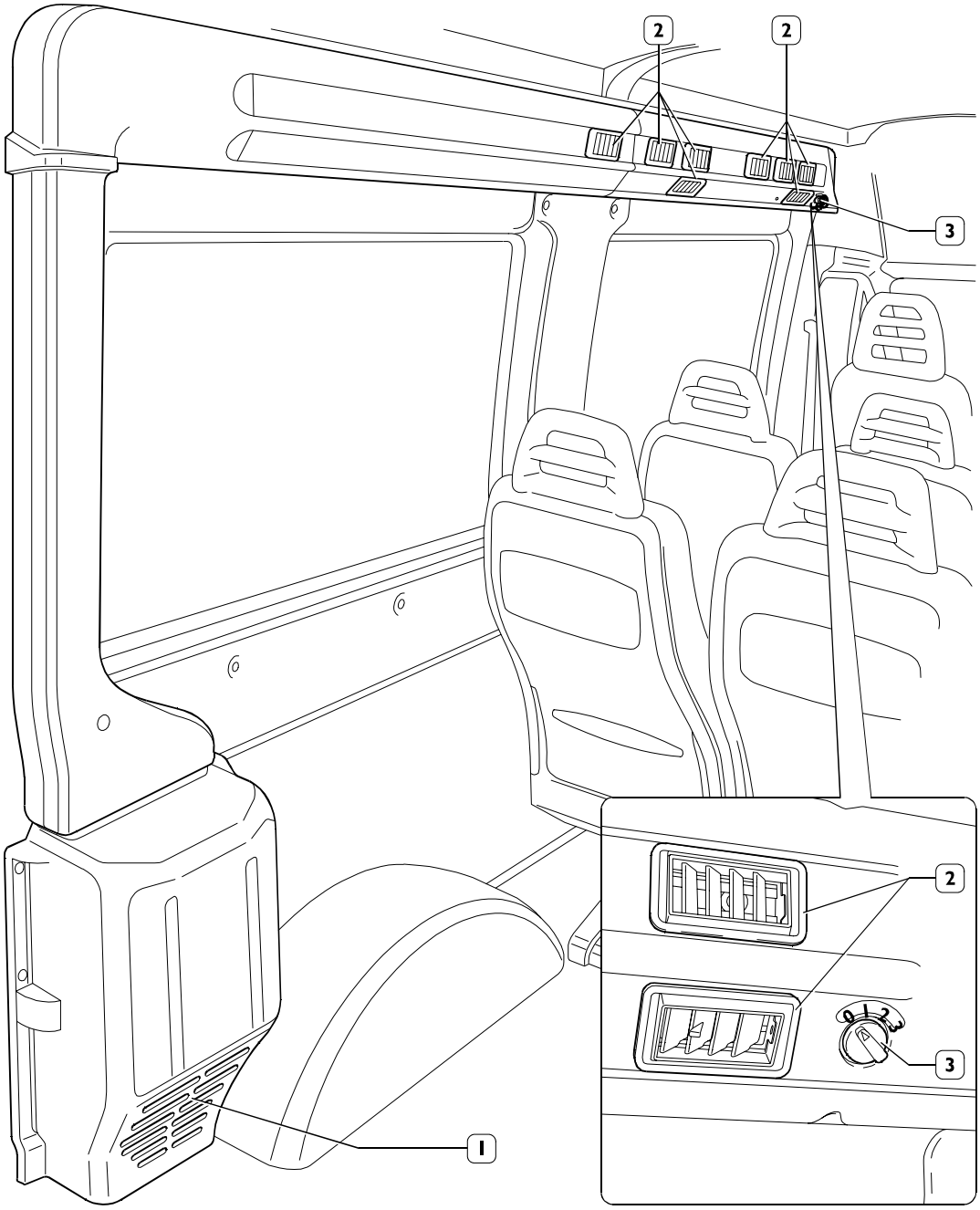

1. Passenger's compartment air intake - 2. Adjustable air vents - 3. Additional cooling system control selector

DESCRIPTION

The additional cooling system integrates the basic air conditioning system and implements air cooling and distribution to the passenger's compartment area.
This system can therefore be activated just when the main air conditioning system is working yet. To start cool air distribution to the passenger's compartment, use selector (3) set at the end of the upper duct.

Selector controls additional cooling circuit enabling valve opening and heater fan speed.
Passenger's compartment air recovered through air intake (1) is conveyed by the heater fan through the additional cooler, it is then cooled, forced into ducts and distributed through the adjustable air vents (2).

ADDITIONAL HEATING SYSTEM CONTROLS

Figure 61

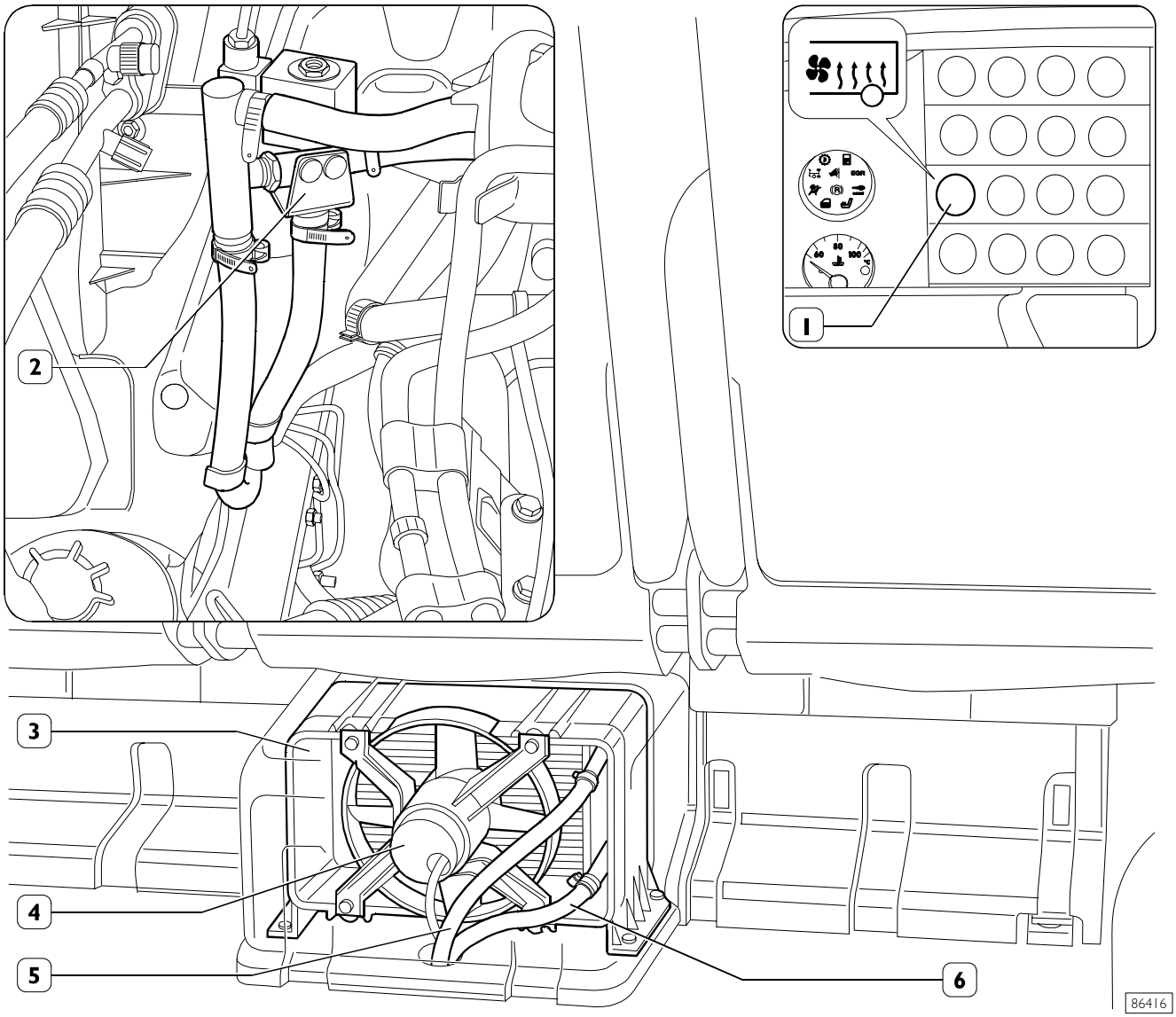

1. Additional heater on button - 2. Additional heater circuit enabling solenoid valve - 3. Additional heater unit - 4. Heater fan - 5. Coolant return pipe - 6. Coolant delivery pipe.

DESCRIPTION

The passenger's compartment additional heater unit (3) is located under the last passenger seat row and can be turned on just with engine running and cab heater operating in "heating" mode.
The additional heater is activated through button (1) set on the instrument panel.

This button controls solenoid valve (2), that deviates the return pipe flow from cab heater to additional heater (3) and heater fan (4) that warms and drives air from the passenger's compartment through the radiator. Heater fan revs cannot be adjusted.

ADDITIONAL COOLING UNIT
Removal - Refitting

Removal

Place the vehicle on pit or lift taking the required safety precautions.
Disconnect battery negative and positive terminals.
Drain out coolant from the cooling system as described in the relevant section of this Manual.

Figure 62

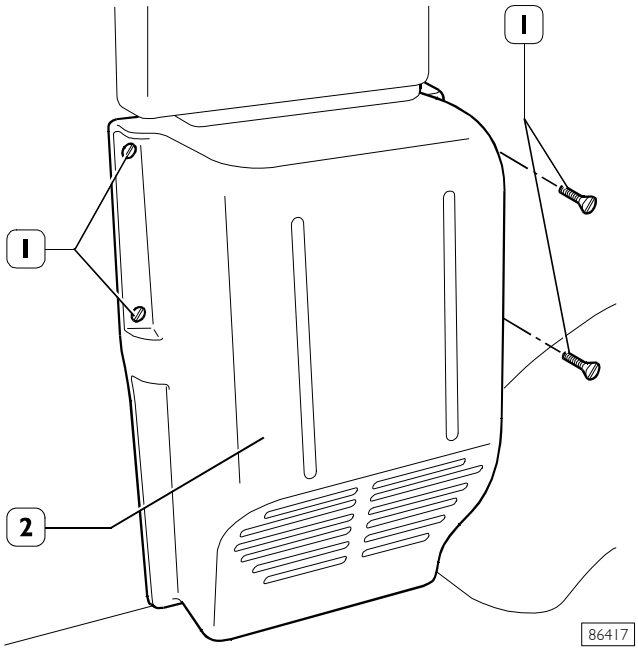

- ❑ Loosen the fastening screws (1) and remove the additional cooling unit protection cover (2).

Figure 63

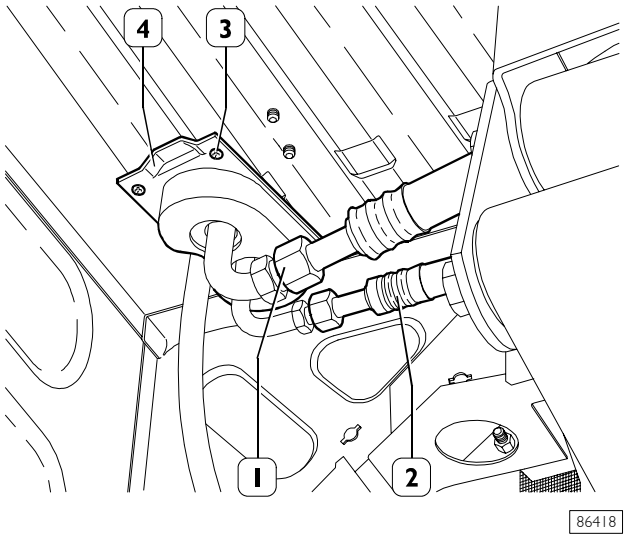

- ❑ Loosen connections and disconnect delivery (1) and return (2) pipes.
- ❑ Loosen the fastening screws (3) and remove the flange (4), withdrawing it from pipes.

Figure 64

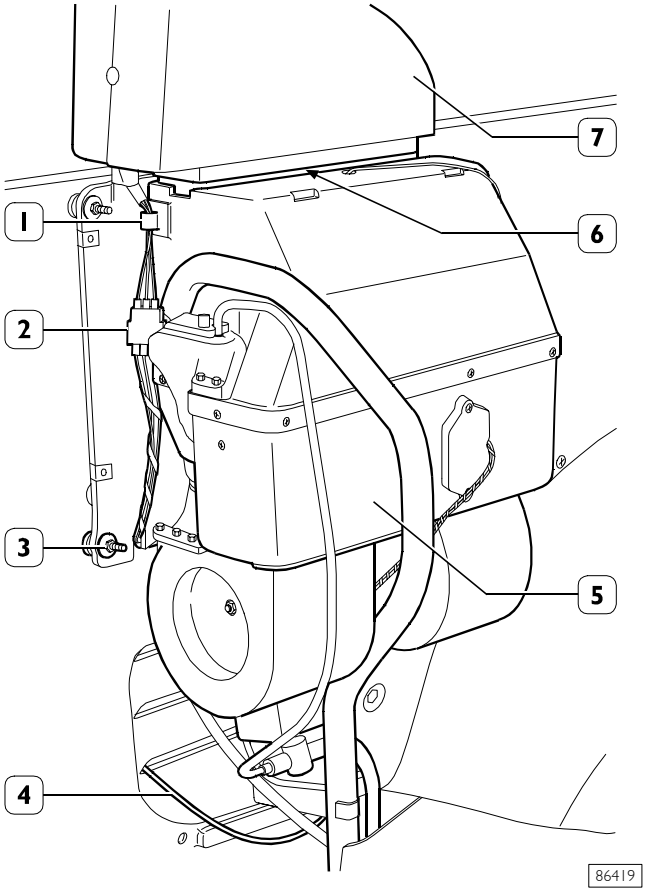

- ❑ Disconnect the electrical connection (2) and release cables from anchoring clip (1).
- ❑ Disconnect power cable electrical connection (4) and release cables from anchoring clips.
- ❑ Remove the sealant bead (6), loosen the fastening screws and remove cool air distribution duct cover (7).
- ❑ Loosen the fastening screws (3), and remove the cooling unit (5) from the wall.
- ❑ Turn with extreme care the whole cooling unit to make the delivery and return pipes come out of the slot on the floor. Then, remove the unit from the vehicle.

Refitting

For refitting, reverse the removal procedure and top up coolant as described in the relevant section of this Manual.
Check for regular operation of the components involved in the above described procedure.

ADDITIONAL HEATER UNIT
Removal - Refitting

Figure 65

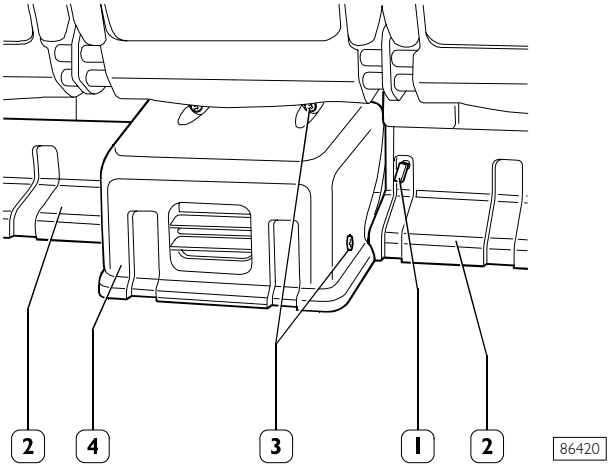

Set the vehicle on level ground taking the required safety precautions.
Disconnect battery negative and positive terminals.
Prepare a proper container to collect engine coolant.

Removal

- ❑ Release the anchoring clips (1) and remove rear seat lower side upholstery (2).
- ❑ Loosen the fastening screws (3) and remove the additional heater rear protection (4).

Figure 66

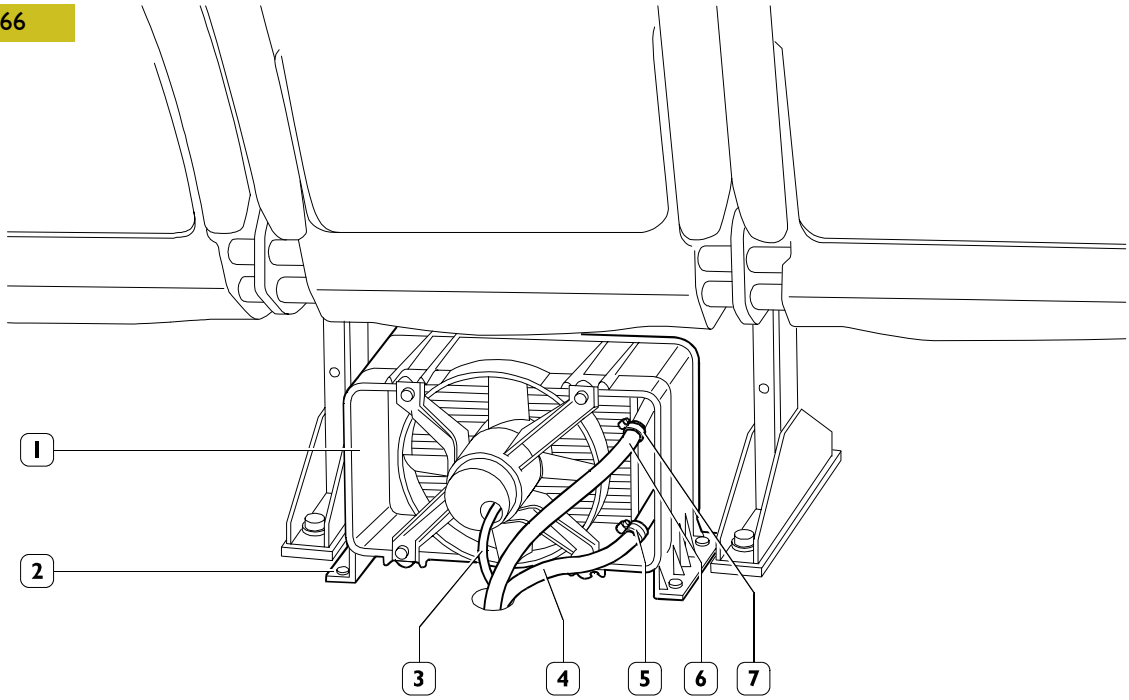

Set the container for collecting engine coolant near the additional heater delivery and return pipes.

- ❑ Disconnect the heater fan power cable electrical connection (3) and release it from the anchoring clips, if any;
- ❑ Loosen clamp (7) and disconnect the additional heater engine coolant delivery pipe (6). Plug the pipe end properly to prevent leaks;
- ❑ Loosen clamp (5) and disconnect the additional heater engine coolant delivery pipe (4). Plug the pipe end properly to prevent leaks;
- ❑ Loosen the fastening screws (1) and remove the additional heater (2) from the vehicle.

Refitting

For refitting, reverse the removal procedure and top up engine coolant as described in the relevant Section.

ADDITIONAL HEATER CIRCUIT ENABLING SOLENOID VALVE
Removal - Refitting

Set the vehicle on level ground taking the required safety precautions.
Disconnect battery negative and positive terminals.
Prepare a proper container to collect engine coolant.

Figure 67

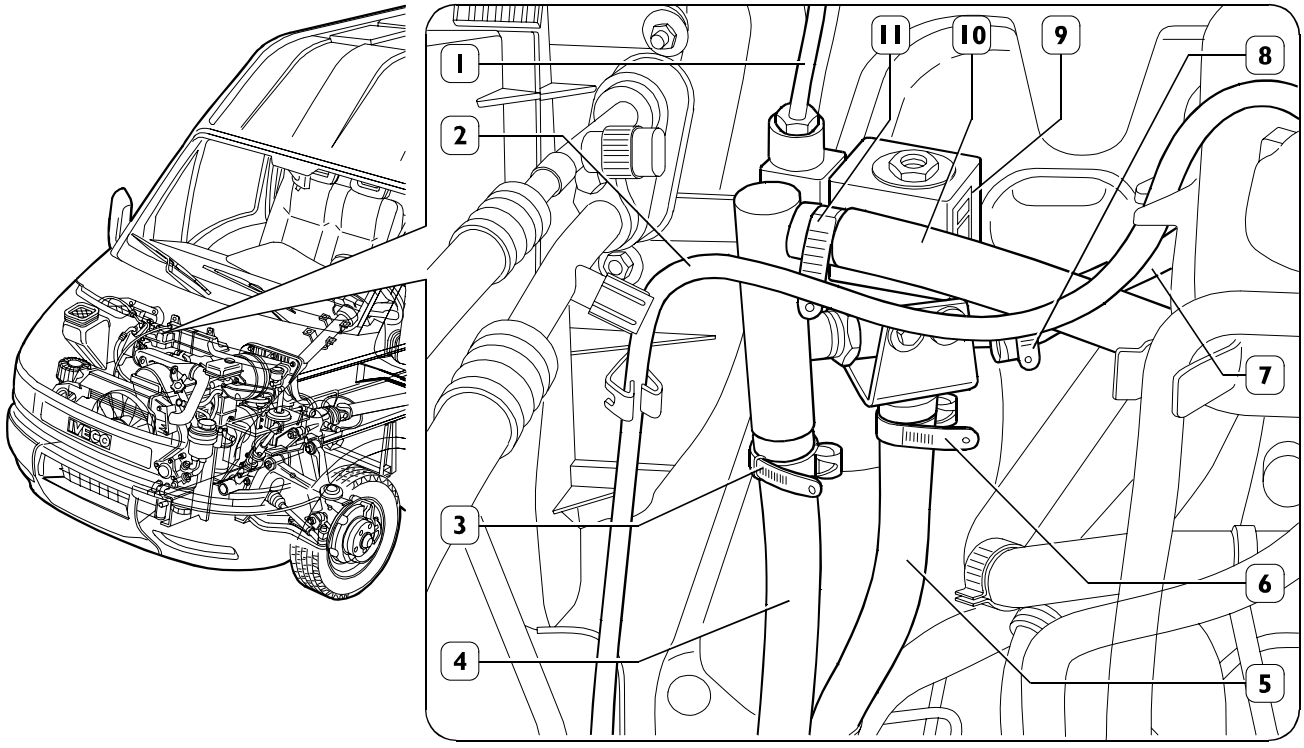

Set the container for collecting engine coolant near the additional heater delivery and return pipes.

Removal

- ❑ Release the anchoring clips and move aside the expansion tank breather pipe (2) to clear the work area.
- ❑ Disconnect the additional heater circuit enabling solenoid valve (9) power cable electrical connection (1);
- ❑ Loosen clamp (11) and disconnect coolant return pipe (10) to engine;
  Plug the pipe end properly to prevent leaks;
- ❑ Loosen clamp (8) and disconnect coolant return pipe (7) from cab heater;
  Plug the pipe end properly to prevent leaks;
- ❑ Loosen clamp (6) and disconnect coolant delivery pipe (5) to additional heater;
  Plug the pipe end properly to prevent leaks;
- ❑ Loosen clamp (3) and disconnect coolant return pipe (4) from additional heater;
  Plug the pipe end properly to prevent leaks;

Refitting

For refitting, reverse the removal procedure and top up engine coolant as described in the relevant Section.

SECTION 13

Scheduled maintenance

Page

MAINTENANCE 3

❑ Table of maintenance services 3

❑ 8140 engine vehicles 3

INSPECTION AND/OR MAINTENANCE INTERVENTIONS 4

EXTRA PLAN OPERATIONS 4

❑ (F1A engine vehicles) 5

INSPECTION AND/OR MAINTENANCE INTERVENTIONS 5

EXTRA PLAN OPERATIONS 6

DIAGRAM OF CHECK AND/OR MAINTENANCE POINTS 7

MAINTENANCE OPERATIONS 8

MAINTENANCE

Table of maintenance services

The Extra Plan operations (designated with the letters EP) are complementary to standard services (designated with letter M for Maintenance).
They are maintenance operations to be carried out at regular time or mileage intervals and concern optional components that are not present on all models.
Important! The correlation between kilometres and months only applies in cases where the distance travelled by the vehicle corresponds roughly to the specified average annual mileage. This is indicated only in order to suggest a hypothetical maintenance programme,. Note that the time intervals specified for Extra Plan operations (designated by letter T for Time) are to be adhered to regardless of the actual mileage covered.



The kilometre frequency for engine lubrication is in relation to a percentage of sulphur in diesel of under 0.5%.
NOTE: If using diesel with a percentage of sulphur above 0.5%, the oil–change frequency has to be halved.

Use engine oil: ACEA E4 (URANIA FE 5 W 30) – ACEA E3 (URANIA TURBO LD)
ACEA E5 (URANIA LD5) – ACEA E2 (URANIA TURBO)

To schedule the work, keep to the following chart:

8140 engine vehicles

Engine Oil	Engines Type	Type of Usage	Standard Services EO	Standard Services M1	Standard Services M2	Extra Plan EP1	Time Operations T1	Time Operations T2	Time Operations T3	Time Operations T4
ACEA E4 Urania FE5W30 (1) ACEA E3 Urania Turbo LD ACEA E5 Urania LD5 ACEA E2 Urania Turbo	**Engine 8140.63 PC/NA (Pre-combustion chamber)**	**Mileage less than 40,000 km/year**	**Every 10,000 km or 200 hours**	Every **30,000 km** or **600 hours**	Every **90,000 km** or **1,800 hours**	Every **120,000 km** or **2,400 hours**	Every **year** at the start of spring	Every **year** at the start of winter	Every **2 years**	Every **3 years**
		Mileage more than 40,000 km/year	**Every 7,500 km or 150 hours**							
	Engines **8140.43C** ID/TCA **8140.43S** ID/TCA									

(1) IVECO recommend Urania FE5W30 for benefits in terms of "fuel economy". IVECO have already introduced this lubricant with new vehicles



- Average speed calculated at 50 km/h
- The fuel filter of the 8140.43R/B/S/N engines (common rail) must be replaced when the warning light on the instrument panel comes on. Every 30,000 km if there is no signal.
- If fuel containing a percentage of sulphur higher than 0.5% is used, the mileage for changing the engine oil must be halved.
- **In the case of very low mileage or anyhow under 30,000 km/year, the engine oil and filter must be changed every 12 months.**
- **In the case of mileage under 40,000 km/year, the gearbox and axle oil must be changed at least every three years.**

INSPECTION AND/OR MAINTENANCE INTERVENTIONS (8140 engine vehicles)

	Type of intervention	EO	Engine 8140.63 PC/NA (Pre-combustion chamber)	M1	M2
		Mileage less than 40,000 km/year	Every 10,000 km or 200 hours	Every 30,000 km or 600 hours	Every 90,000 km or 1,800 hours
		Mileage more than 40,000 km/year	Every 7,500 km or 150 hours		
LUBRICATION, CHANGING OIL, FILTERS AND CHECKING FLUIDS					
1	Changing engine oil	•		•	•
1	Changing engine oil filter			•	•
2	Changing fuel filter			•	•
3	Checking hydraulic brake system fluid level			•	•
4	Changing fuel pre-filter				•
CHECKS IN THE ENGINE BAY					
•	Checking state of auxiliary drive belts			•	
•	Changing auxiliary drive belts				•
•	Changing timing belt				•
•	Changing pre-combustion chamber glow plugs				•
CHECKS UNDER THE VEHICLE					
7	Checking steering box rack covers			•	•
8	Checking wear of brake discs and shoes			•	•
6	Cleaning rear axle oil breather				•
7	Checking steering column, articulation and linkage				•
9	Checking steering box fixing				•
10	Checking universal joints and propeller shaft fixing				•
CHECKS IN THE CAB					
•	Checking parking brake travel			•	•
EXTERNAL CHECKS					
11	Checking headlight adjustment				•
DIAGNOSTICS					
•	Check-up engine EDC system with MODUS-IT 2000 (vehicles with common rail injection system				•
ON-ROAD TESTS					
•	Functional testing on the road			•	•

EXTRA PLAN OPERATIONS (to be carried out possibly in combination with maintenance service)

EP1 EVERY 120,000 km
- ❑ Change engine oil
- ❑ Rear axle differential oil changing procedure

T1 EACH YEAR - especially in early springtime
- ❑ Check state of pollen filters.
  In the case of low mileage, change the filters once a year, early each spring.

T2 EACH YEAR - before the winter season
- ❑ Check coolant density.
- ❑ Check pre-combustion chamber glow plug operation.
- ❑ Change supplementary heater fuel filter.

T3 EVERY TWO YEARS
- ❑ Change brake fluid and bleed brake fluid system.

T4 EVERY THREE YEARS - even if there is no indication of the air filter clogging
- ❑ Change cartridge and clean air filter container.
- ❑ Change engine coolant.

The timing system, alternator and air-conditioning compressor driving belts must be changed on reaching the first time/mileage limit of the following: 90,000 km-1800 hours-4 years.
In harsh conditions of use (dusty and/or hot), the timing system driving belt must be changed every 60,000 km.

(1) *Replace every four years. Replace every 60.000 km under harsh conditions of use (dust and/or heat).*
(*) *If the "clogged filter" warning lamp lights up on the instrument panel, the filter must be replaced before the programmed replacement interval*

(F1A engine vehicles)

Engine-oil	Engine	Standard Services		Extra plan		Time Operations			
		M1	M2	EP1	EP2	T1	T2	T3	T4
ACEA E4 Urania FE5W30(1) ACEA E5 Urania LD5 ACEA E3 Urania Turbo LD	**Engine F1A**	Every 40,000 km or 800 hours	Every 120,000 km or 2,400 hours	Every 80,000 km or 1,600 hours	Every 240,000 km or 4,800 hours	Every year at the start of spring	Every year at the start of winter	Every 2 years	Every 3 years

(1) IVECO recommend Urania FE5W30 for benefits in terms of "fuel economy". IVECO have already introduced this lubricant with new vehicles

IMPORTANT NOTES:

- Average speed calculated at 50 km/h
- If using oils according to specification ACEA E2, API CF-4, the replacement interval for engine oil and filter must be reduced to 30,000 km
- If fuel containing a percentage of sulphur higher than 0.5% is used, the mileage for changing the engine oil must be halved.
- In the case of very low mileage or anyhow under 40,000 km/year, the engine oil and filter must be changed every 12 months.
- In the case of mileage under 40,000 km/year, , the gearbox and axle oil must be changed at least every three years.

INSPECTION AND/OR MAINTENANCE INTERVENTIONS
(F1A engine vehicles)

	Type of intervention	M1 Every 40,000 km or 800 hours	M2 Every 120,000 km or 2,400 hours
LUBRICATION, CHANGING OIL, FILTERS AND CHECKING FLUIDS			
1	Changing engine oil	•	•
1	Changing engine oil filter	•	•
2	Changing fuel filter *	•	•
3	Checking hydraulic brake system fluid level	•	•
4	Visually checking fuel pre-filter clogging	•	
4	Changing fuel pre-filter		•
5	Changing mechanical gearbox oil		•
6	Changing rear axle oil		•
CHECKS IN THE ENGINE BAY			
•	Checking state of auxiliary drive belts	•	•
•	Changing auxiliary drive belts (1)		•
CHECKS UNDER THE VEHICLE			
7	Checking steering box rack covers	•	•
8	Checking wear of brake discs and shoes	•	•
6	Cleaning rear axle oil breather		•
7	Checking steering column, articulation and linkage		•
9	Checking steering box fixing		•
10	Checking universal joints and propeller shaft fixing		•

(1) *Replace every four years. Replace every 60.000 km under harsh conditions of use (dust and/or heat).*

(*) If the "clogged filter" warning lamp lights up on the instrument panel, the filter must be replaced before the programmed replacement interval

INSPECTION AND/OR MAINTENANCE INTERVENTIONS (F1A engine vehicles)

	Type of intervention	M1 Every 40,000 km or 800 hours	M2 Every 120,000 km or 2,400 hours
CHECKS IN THE CAB			
•	Checking parking brake travel	•	•
EXTERNAL CHECKS			
I I	Checking headlight adjustment		•
DIAGNOSTICS			
•	Check-up engine EDC system with MODUS-IT 2000		•
ON-ROAD TESTS			
•	Functional testing on the road	•	•

EXTRA PLAN OPERATIONS (to be carried out possibly in combination with maintenance service)

EP1 EVERY 80,000 km or 1600 hours (.12 and EGR engine vehicles only)

- ❑ Check air flow meter with MODUS - IWT IT 2000 devices
- ❑ Air flow meter replacement (1)

EP2 EVERY 240,000 km (or 4800 hours)

- ❑ Changing the timing system driving belt.
- ❑ Changing the automatic tensioner of the timing system driving belt.
- ❑ Changing the automatic tensioner of the belt driving the alternator and hydraulic pump
- ❑ Changing the pre-heating glow plugs.

TI EACH YEAR - especially in early springtime

- ❑ Check state of pollen filters.
  In the case of low mileage, change the filters once a year, early each spring.

T2 EACH YEAR - before the winter season

- ❑ Check coolant density.
- ❑ Check pre-combustion chamber glow plug operation.

T3 EVERY TWO YEARS

- ❑ Change brake fluid and bleed brake fluid system.

T4 EVERY THREE YEARS - even if there is no indication of the air filter clogging

- ❑ Change cartridge and clean air filter container.
- ❑ Change engine coolant.

(1) Replacement is mandatory also if the flow meter does not appear faulty following the test.

(2) The timing belt must be replaced in any case every 5 years.

(3) Early air cleaner obstruction is generally due to particular environmental conditions. For this reason it may need to be replaced when indicated by the sensor regardless of the replacement interval also if not specifically stated.

DIAGRAM OF CHECK AND/OR MAINTENANCE POINTS

Figure 1

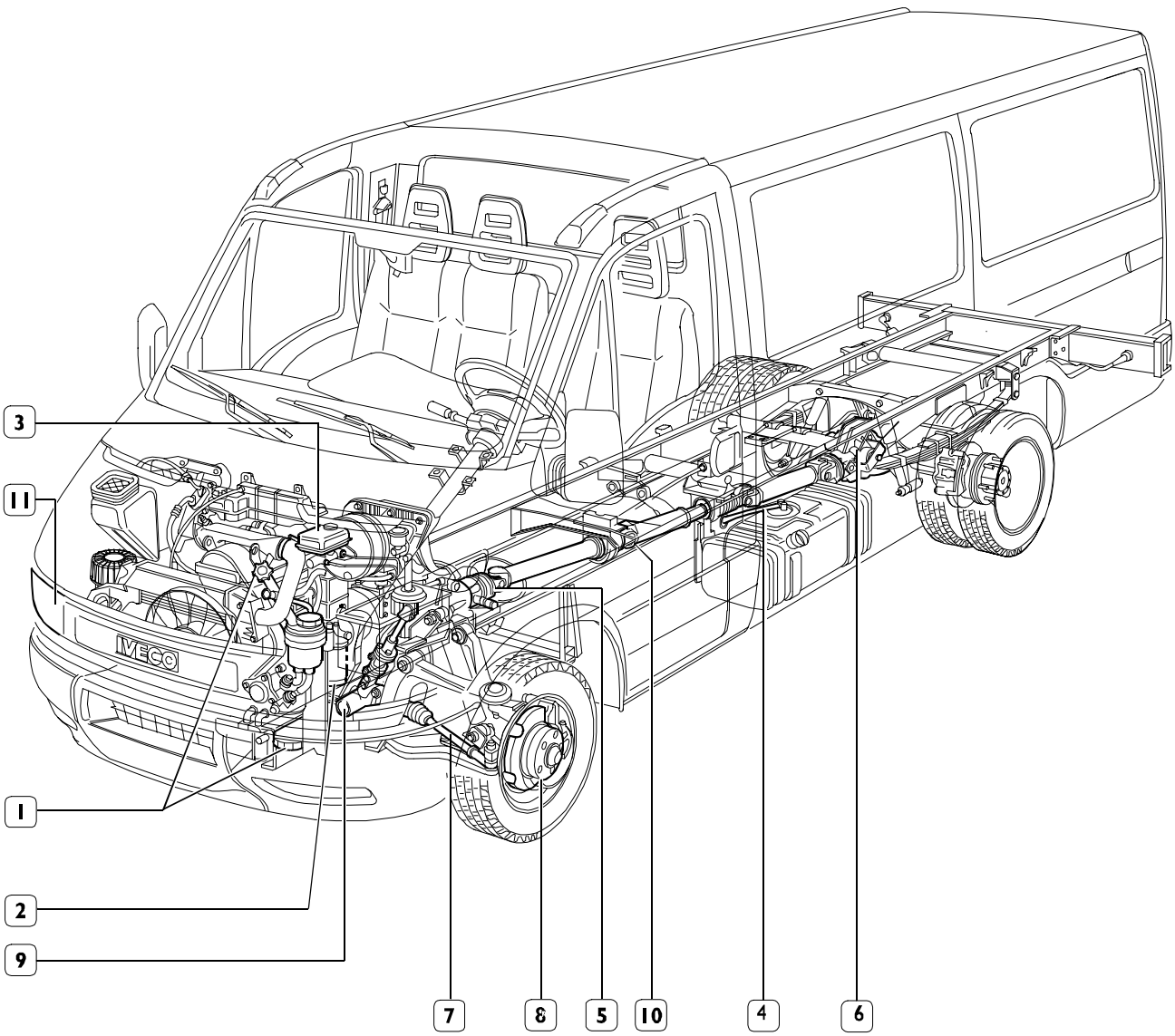

MAINTENANCE OPERATIONS

The figures given below are for the maintenance work on the engines (8140..).

After checking or changing parts, test the operation of the vehicle.

EO SERVICE (8140.63 engine with pre-chamber vehicles only)

1. Changing engine oil

Figure 2

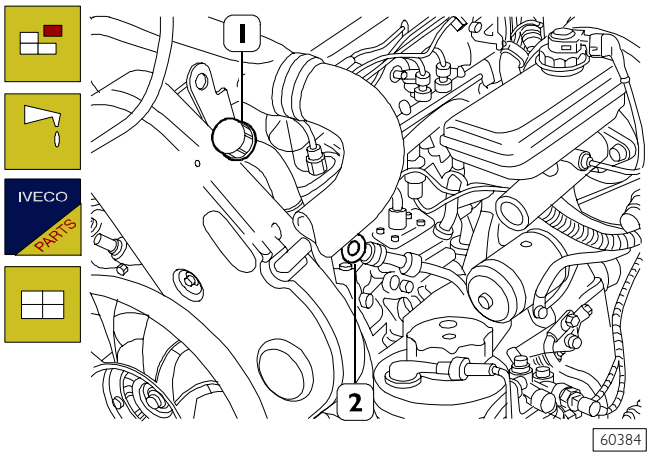

Take out the dipstick (2).
From underneath the vehicle, remove the soundproofing guard, and fit it back on after completing the operation.
Remove the plug from the oil sump and drain the engine oil off into a special container. Pour oil into the engine through the filling-pipe (1) of the required grade and quantity (see fluids table in the GENERAL section).

M1 SERVICE

M1 service is replaced by the "engine oil changing" procedure described in the EO service section with the addition of the following operations.

1. Changing engine oil filter

Figure 3

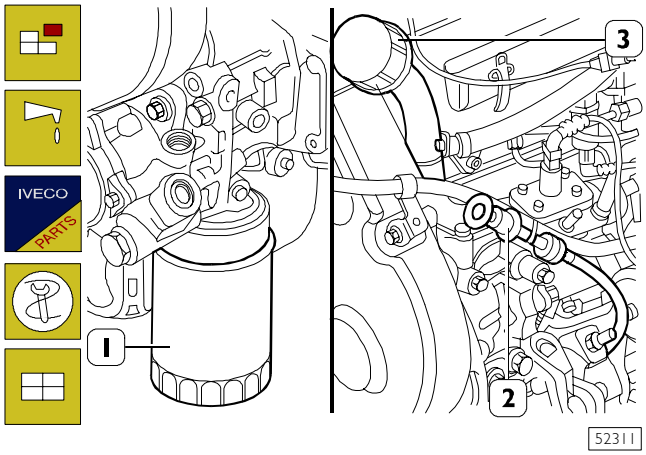

Take out the dipstick (2). From underneath the vehicle, remove the soundproofing guard, and fit it back on after completing the operation. Remove the plug from the oil sump and drain the engine oil off into a special container.

For the engines (8140..) use tool 99360091 and remove the oil filter (1), for engines (F1A) use tool 99360076.

Before refitting the new cartridges, moisten the seal with engine oil.

Screw the oil filter (1) on by hand until it is in contact with the mounting and then tighten by 3/4 of a turn (tightening torque 25 Nm). Screw the plug back on under the sump.
Pour oil into the engine through the filling-pipe (1) of the required grade and quantity (see fluids table in the GENERAL section).

2. Changing the fuel filter

Figure 4

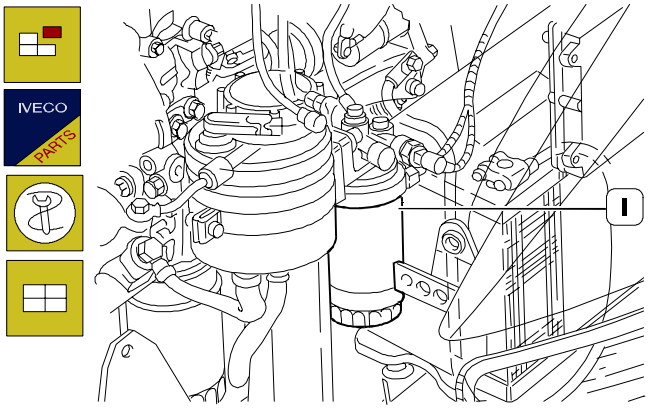

For the engines (8140..) use tool 99360091 and remove the fuel filter (1), for engines (F1A) use tool 99360076.

Screw the new one on by hand (tightening torque 18 ± 2 Nm) taking care to check that the rubber gasket and seal surface are clean and in a perfect state of repair.

For 8140.63 and 8140.43C engines

Bleed the air from the supply as described hereunder.

Figure 5

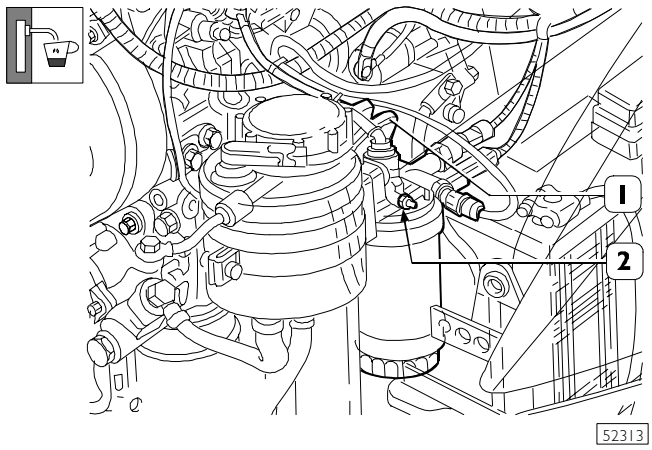

Loosen the air bleeder screw (2) and operate the priming pump piston (1) until all the air in the system has been ejected then close the bleeder screw (2).

If the engine stops due to running out of fuel, with air consequently getting into the system, it is necessary (if bleeding as described above is not sufficient) to loosen the fittings of at least two injectors, turn the engine by starting and after bleeding the air close the fittings again.

3. Checking hydraulic brake system fluid level

Figure 6

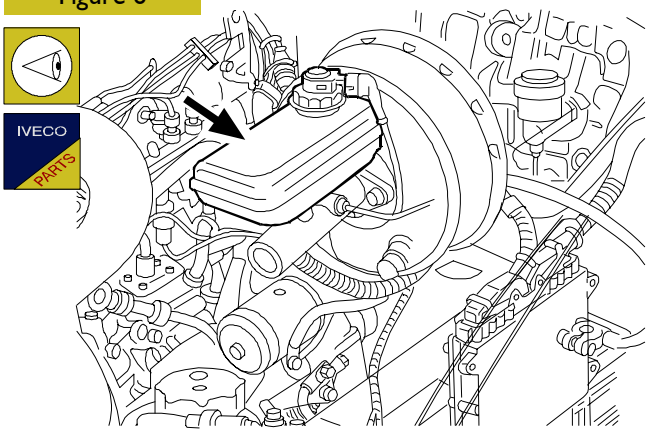

Check the level of brake fluid. If it is low, top it up (see fluids table in the GENERAL section).

4. Visually checking fuel pre-filter clogging (F1A engines)

Visually check that the fuel pre-filter is not clogged; if it is, change it as described in the M2 Service "Changing fuel pre-filter (on chassis frame)".

• Checking state of auxiliary drive belts

Visually check that the belts are not worn or deteriorated, in which case replace them as described in the "ENGINE" section.

7. Checking steering box rack covers

Remove the soundproofing guard from underneath the vehicle.
If the covers are damaged at all, replace them as described in the "STEERING GEAR" section.

8. Checking wear of brake discs and shoes

If the wear is found to be too great, replace the brake discs or shoes as described in the "BRAKES" section.

• Checking parking brake travel

Check that the vehicle stays braked with a lever travel of:

❑ five catches.

If it does not, adjust it as described in the "BRAKES" section.

M2 SERVICE

The M2 service comprises some of the operations in the M1 service as well as the following operations.

4. Changing the fuel pre-filter (on the chassis frame)

Figure 7

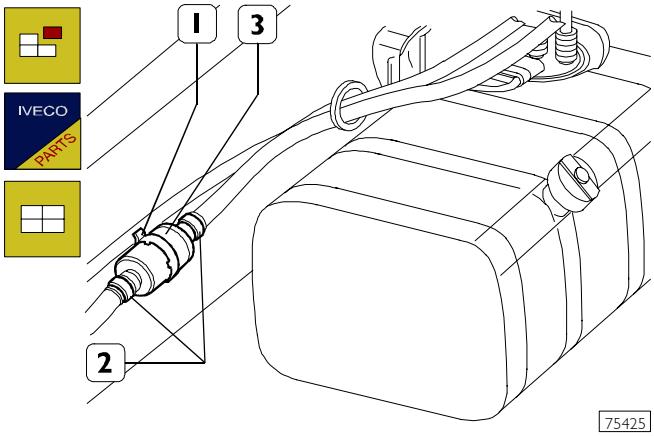

Disconnect the pre-filter retaining clamp (1) and the clamps (2) connecting the fuel pipes. Remove and replace the fuel pre-filter (3).

For vehicles with 8140 engine.
This operation is described in EP1 service section.

5. Changing gearbox oil

Figure 8

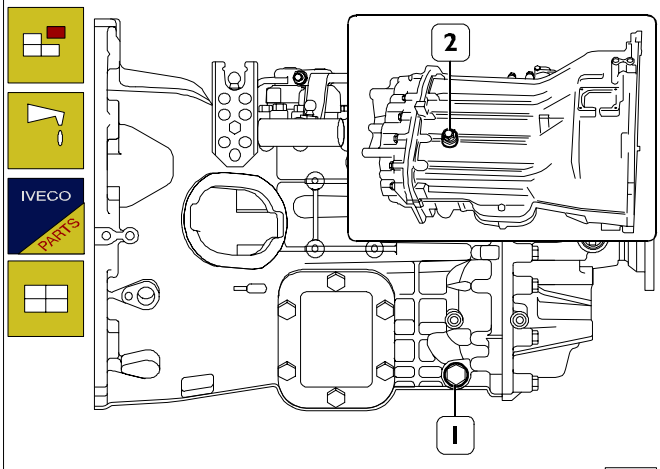

The lubrication oil should be drained off when it is warm.
Place a special container under the plug (1). Take out the plug and drain off the oil.
Screw the plug back on. Unscrew the filler plug and pour in lubricating oil of the required grade and quantity (see fluids table in the GENERAL section).
Fit the plug (2) back on.
Remove the oil vapour vent and clean it thoroughly.

6. Changing rear axle oil

For vehicles with 8140 engine.
This operation is described in EP1 service section.

Figure 9

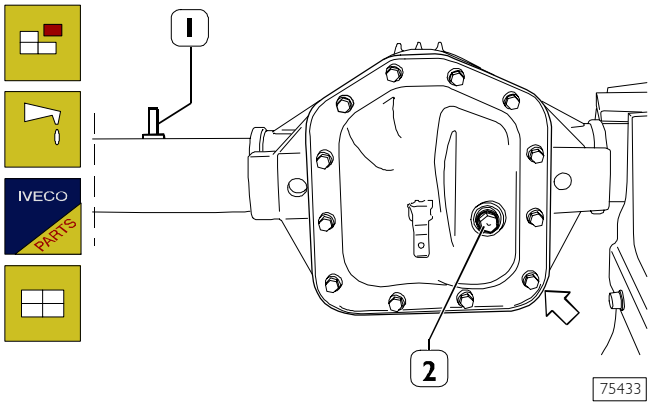

The oil change described refers to the Rear Axles 4050210 - 450311/1 - 450511.

The lubricating oil has to be drained off while it is hot.
Place a container under the plug near the arrow; remove the plug and drain off the oil.
Screw the plug back on. Unscrew the plug (2) and pour in the prescribed quantity of lubricating oil (see fluids table under the GENERAL INFORMATION heading).
To get off I leak it some vapors oil (1) and to carefully clean it.

Figure 10

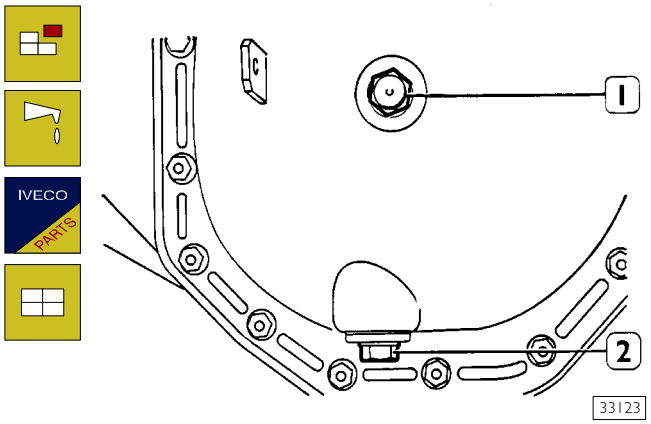

The oil change described refers to the Rear Axles 450517/2.

The lubrication oil should be drained off when it is warm.
Place a special container under the plug (2). Take out the plug and drain off the oil.
Screw the plug (2) back on. Unscrew the plug (1) and pour in lubricating oil of the required grade and quantity (see fluids table in the GENERAL section).
Remove the oil vapour vent and clean it thoroughly.
(Shown in Figure 11).

• Changing auxiliary drive belts

This should be done as described in the "ENGINE" section.

• Changing timing belts

This should be done as described in the "ENGINE" section.
For vehicles with 8140 engine.
This operation is described in EP1 service section.

• Changing pre-combustion chamber glow plugs

This should be done as described in the "ENGINE" section.

For vehicles with 8140 engine.
This operation is described in EP1 service section.

6. Cleaning rear axle oil breather

Figure 11

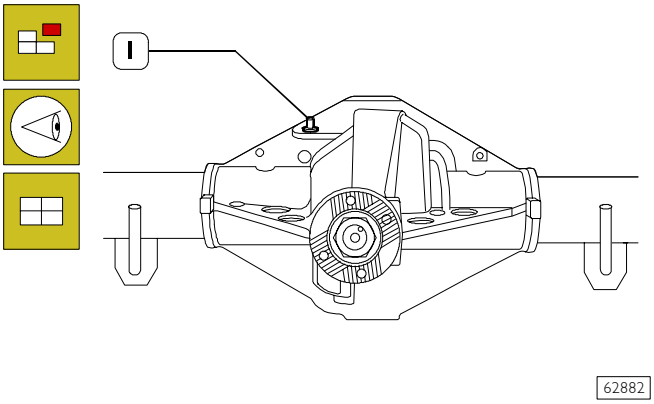

Take out the screws (1) and remove the brake caliper with its brake linings from the mounting.

Cleaning the oil breather pipe as described here, refers to the rear axle 450517/2, for rear axles 4050210 - 450311/1 - 450511 refer to Figure 9.

7. Checking steering column, articulation and linkage

Steering linkage

- ❑ Check that the nuts and screws securing the clamps to the tie rods have not deteriorated and are tightened to the required torque.
- ❑ The tie rods must not be damaged, likewise the threaded portion must be sound.

Swivel heads

- ❑ Clean the swivel heads of the tie rods.
- ❑ This must be done with dry canvas or raw cotton. Use no solvents.
- ❑ Check that the swivel heads, in their components, have no points of corrosion, with sections affected to a depth greater than 1 mm. In particular, check the sheet metal cover close to the rolled section.
- ❑ Check the protecting casing: it must be secured to the body and to the pin of the joint with a retaining ring and must not rotate.
- ❑ The casing must be neither damaged nor deteriorated.
- ❑ Crush the protective casings by hand and check that lubrication grease comes out.
- ❑ Check that the nuts and split pins have not deteriorated.

9. Checking steering box fixing

Remove the soundproofing guard from underneath the vehicle.
If there is any damage, refer to the "STEERING GEAR" section.
After making the check, fit the soundproofing guard back on.

10. Checking universal joints and propeller shaft flange fixing

Figure 12

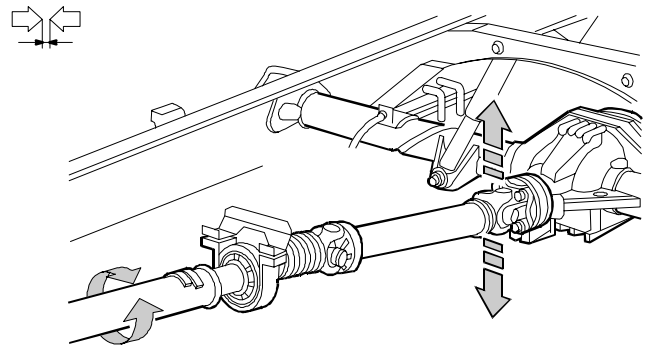

52124

The plates welded onto the propeller shafts are there for balancing.
If there are no plates, it is necessary to balance the shaft again.
Turning the propeller shaft and at the same time the sliding sleeve in the opposite direction, check there is not too much clearance between the splines.
Acting on the forks of the couplings (in the direction of the arrows shown in the figure), check that the spiders are not worn. Replace them if they are.
If there is any damage, refer to the "PROPELLER SHAFTS" section.

11. Checking headlight adjustment

Figure 13

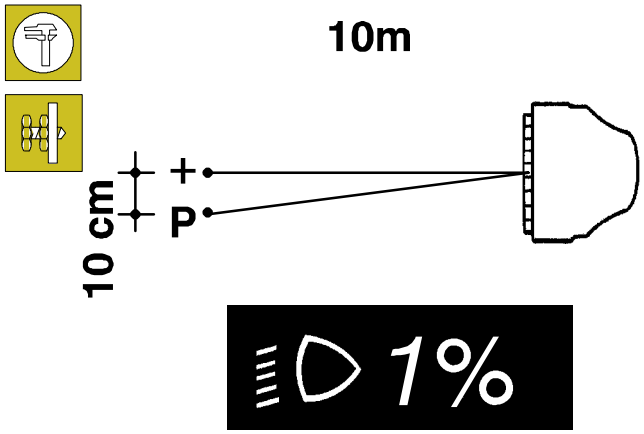

46311

Set the unloaded vehicle on level ground, with the tyres at the required pressure, opposite a light-coloured wall.
Draw two crosses on the wall corresponding to the centres of the two headlights.
Position the switch (for vehicles fitted with one) onto "0".
Set the vehicle at a distance of 10 metres and switch on the low beam. The distance between the crosses and the points P, corresponding to the angle of the headlamps, must be 10 cm (1% as indicated on the plate).

- **Check-up engine EDC system with MODUS-IT2000 (UNIJET injection system)**

SECTION 14

Electrical/electronic system

Models

29L9	29L10	29L11	29L12		
35S9	35S10	35S11	35S12	35S13	
35C9	35C10	35C11	35C12	35C13	
40C9	40C10	40C11	40C12	40C13	
		45C11		45C13	
		50C11		50C13	
					60C15
					65C15

Repair manual
Electrical/electronic system

PREMISE

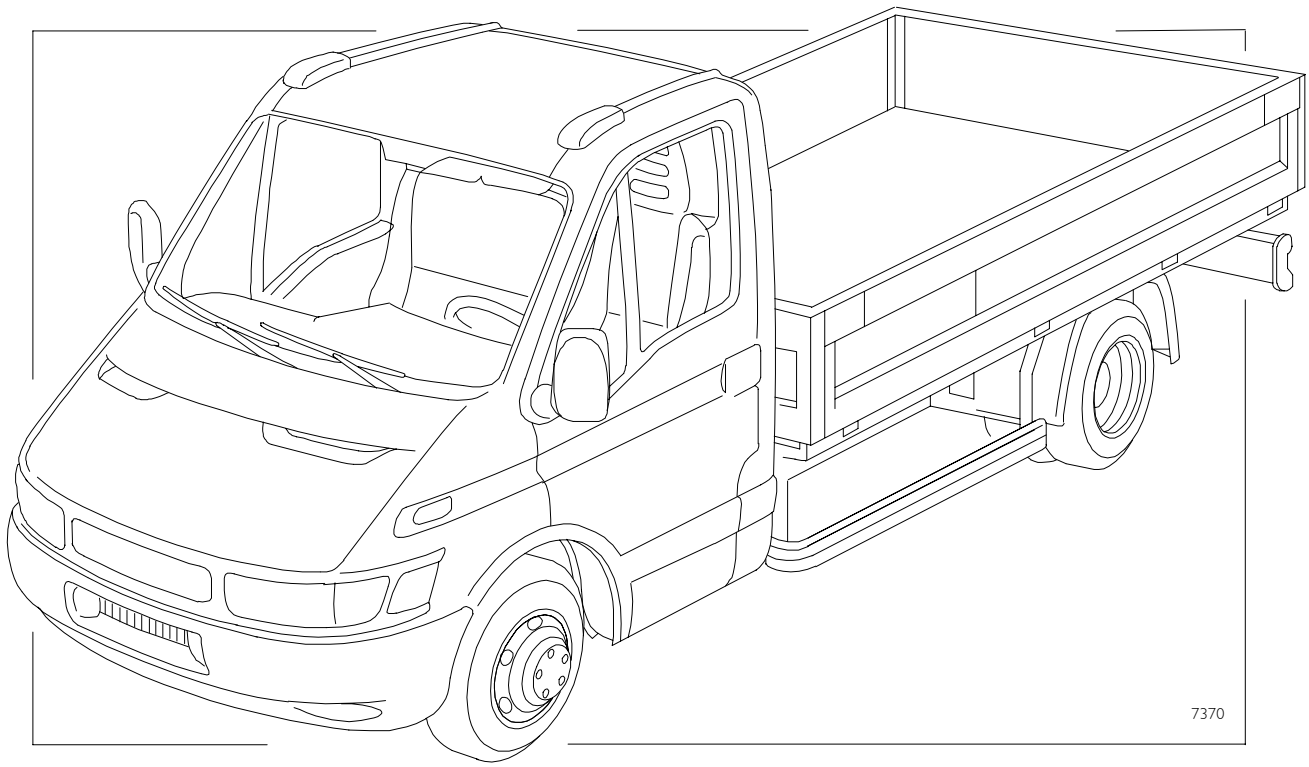

This manual is part of the aids that the Technical Publications sector makes available to workshop technicians to allow the most correct performance of maintenance and/or repair operations and it is also a good way to familiarise with the IVECO product.

The experience acquired over many years in servicing and in editing technical publications has led us to devote a special volume to the electric system fitted on the models in question, considering the speciality and complexity of the subject.

This manual is intended for people with professional preparation in the "Vehicle Electrician" sector and who at the same time avail of adequate and indispensable testing and/or measurement equipment for the main electrical ratings.

In drafting the texts and representing the graphics we have taken account of the particular necessities of the operator technician in some cases stating references or repeating certain diagrams in different places that may be obvious to a design engineer.

The completeness of the information given in the wiring diagrams, the size chosen and the ease with which they can be taken allow the repair operator to avail of all the information exactly where it is needed most, i.e. on the vehicle.

DAILY

Print 603.43.371 – 4th edition
Base – May 2002

UPDATE DATA

Chapter	Description	Page	Revision date
IV	ELECTRONIC SYSTEMS	1, 2, 2/1, 71, 72, 79, 80, 81, 81/1, 81/2, 81/3, 81/4, 81/5, 81/6, 81/7, 81/8, 81/9, 81/10, 81/11, 81/12, 81/13, 82,157, 158, 159, 160, 161, 162, 163, 164, 165, 166, 167, 168	Revi - May 2003
V	CIRCUIT CHARTS	1, 2, 3, 4, 12/1, 12/2, 47, 48, 51, 51/1, 52, 54/1, 54/2, 60/1, 60/2, 63, 63/1, 64, 73, 74, 74/1, 74/2, 79/1, 80	Revi - May 2003

GENERAL LIST OF CONTENTS

CHAPTER

GENERAL

POWER NETWORK I

CABLES ON THE VEHICLE II

SHARED COMPONENTS III

ELECTRONIC SYSTEMS IV

CIRCUIT CHARTS V

GENERAL

Page

COMPOSITION OF THIS MANUAL 9

ABBREVIATIONS AND GRAPHIC SYMBOLS USED IN THIS MANUAL 10

GENERAL CONDITIONS FOR LAYING ELECTRIC CIRCUITS 11

GENERAL WARNINGS 11

- ❑ General warnings for electronic components 12

MAIN TECHNICAL CHARACTERISTICS 13

OUTFITS 14

- ❑ Vehicle perspective view of Cab Truck version 15
- ❑ Vehicle perspective view of Dual Cab version 16
- ❑ Vehicle perspective view of Van version 17
- ❑ Vehicle perspective view of Semiglazed Van version 18
- ❑ Vehicle perspective view of Vendor version 19
- ❑ Vehicle perspective view of the Bus version (derived from Vendor) 20

ENGINE TECHNICAL / PERSPECTIVE VIEWS 21

- ❑ Engine 8140.63 PC/NA (.9) 23
- ❑ Main components on engine and gearbox 23
- ❑ Engine 8140.43C ID/TCA (.11) 26
- ❑ Main components on engine and gearbox 26
- ❑ Engine 8140.43S Unijet (.13) 29
- ❑ Main components on engine and gearbox 29
- ❑ Engine 8140.43B (.11) 30
- ❑ Engine 8140.43N (.15) 32
- ❑ Engine F1A Unijet (.10 - .12) 34
- ❑ Main components on engine and gearbox 36

TECHNICAL CODES 37

COMPOSITION OF THIS MANUAL

This manual comprises a General section and 6 chapters identified by Roman numerals:

Chapter I POWER NETWORK
Chapter II CABLES ON THE VEHICLE
Chapter III SHARED COMPONENTS
Chapter IV ELECTRONIC SYSTEMS
Chapter V CIRCUIT CHARTS

The subjects dealt with are updated at the date of drafting of the manual which practically corresponds to the date of printing.

Each chapter has its own consecutive page numbering which allows easy updating. The figures have a double number in which the first figure refers to the chapter number and the second is a progressive number; this makes it possible to easily find the figures if the reference to them is not in the same chapter.

Guide to reading the manual

The basic ways to have access to the data contained in this manual are:

a) The general list of contents which lists all the chapters forming part of the manual.

b) The analytical index in which the various technical items are listed in alphebetical order each time they are given in the manual.



The data contained in this publication may not be up-to-date as a result of alterations adopted by the Manufacturer at any time, due to reasons of a technical or commercial nature, or to adjust to the requirements of laws in the different Countries.

ABBREVIATIONS AND GRAPHIC SYMBOLS USED IN THIS MANUAL


Indicates a general warning

A Ampere

kW KiloWatt

NB Note Well

m2 Identification of an earth point

IWT IVECO Wiring Tester

V Volt

Ω Ohm


Connection to a power earth point


Connection to a signal earth point

72030_{3C} Code of connector between cables:
72030 = connector code
3C = cell identification co-ordinates

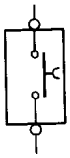
Base equipment

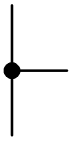
Base electrical connection

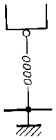
Connection to earth by cable

II_6 Connector between cables:
II = connector number
6 = cell number

7777 Cable colour code


Consult

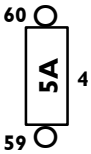

Reed fuse on control box
4 = fuse number
5A = capacity
59-60 = terminal identification


Electronic component or control unit


Optional equipment


Optional electrical connection in a base circuit chart


Connection to earth through metal agglomerate

Cables symbol

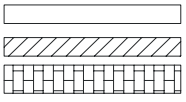
No protection
Protection with continuous PVC tape
Protection with 30 mm spiral PVC tape



The symbol identifies a knot

GENERAL CONDITIONS FOR LAYING ELECTRIC CIRCUITS

- Engine off
- Ignition switch off
- Handbrake engaged
- Neutral gear
- Fluids at normal level

GENERAL WARNINGS

 DO NOT EVER DISCONNECT THE SYSTEM BATTERIES AND DO NOT OPEN THE GENERAL CURRENT SWITCH WITH THE I.C. ENGINE RUNNING.
DO NOT START THE ENGINE WITHOUT FIRST CONNECTING THE BATTERIES IN A PERMANENT MANNER.

- Before doing any work on the vehicle chock the wheels appropriately.
- Do not use quick chargers to start the engine. Starting must only be carried out with separate batteries or with the special trolley.
- Make sure that the polarity on the battery terminals is correct when starting from an auxiliary trolley.
- The incorrect polarisation of the power voltage of electronic control units (for example incorrect polarisation of the batteries) may lead to their destruction.
- When needing to disconnect the battery from the system, firstly always disconnect the battery negative cable that goes to the engine from the negative terminal of the battery itself.
- Before connecting the battery to the system, make sure that it is well insulated.
- When seeking faults, insert a wander fuse between the battery negative terminal and the engine earth cable.
- Before removing any electrical and/or electronic components, disconnect the ground cable from the negative terminal of the battery.
- Disconnect the battery from the system when charging it with external equipment.
- Disconnect the external charging equipment from the mains before removing its grippers from the terminals of the battery.
- Do not insert or remove the connector of electronic control units with the power on.
- With temperatures above 80 °°C (drying ovens) remove the electronic control units
- During electric welding work disconnect the connectors of electronic control units.
- During connection, tighten the nuts of the connectors (temperature, pressure sensors, etc.) only with the specified tightening torque.

 **Measurements in electronic control units, plug connections and electric connections to components may be carried out only on appropriate testing lines, with special plugs and sockets. Never use improper means such as metal wires, screwdrivers, clips or the like. In addition to the danger of a short circuit, damage to the plug connectors may also result and this would subsequently cause contact problems.**

General warnings for electronic components

- Before disconnecting the junction connector from an electronic control unit, isolate the system. (Figure to the side, ref. A).
- Do not cause sparks to check whether a circuit is live.
- Do not touch the pins of the connectors of electronic control units with your fingers.
- Do not use a test bulb to check the continuity of a circuit. Only use the appropriate testing devices (ref. B).
- Do not directly power the components associated with electronic control units with the nominal power rating of the vehicle.
- Do not insert the prods of a measuring device in the pins of connectors of electronic control units. Any measurements are made using UNITESTER (ref. C).
- Make sure that the wirings of electronic devices (length, type of cable, location, grouping, connection of screen braiding, earthing, etc.) conform with the IVECO system and that they are carefully restored after repair or maintenance work. To avoid the possible malfunctioning of the electronic systems on board, the wirings of additional devices must follow a different path than that of the above-mentioned systems.
- Replace components only with original IVECO components.
- Do not install additional electrical and/or electronic equipment not provided for by IVECO or by local laws.
- Do not connect the negative terminals of additional systems to the negative terminals of electronic systems.
- In the event of electric welding on the vehicle, disconnect all the electronic control units and/or disconnect the power cable from the battery positive terminal and connect it to the frame earth (ref. D).
- Remove the control units and electronic components in the case of oven baking paint.

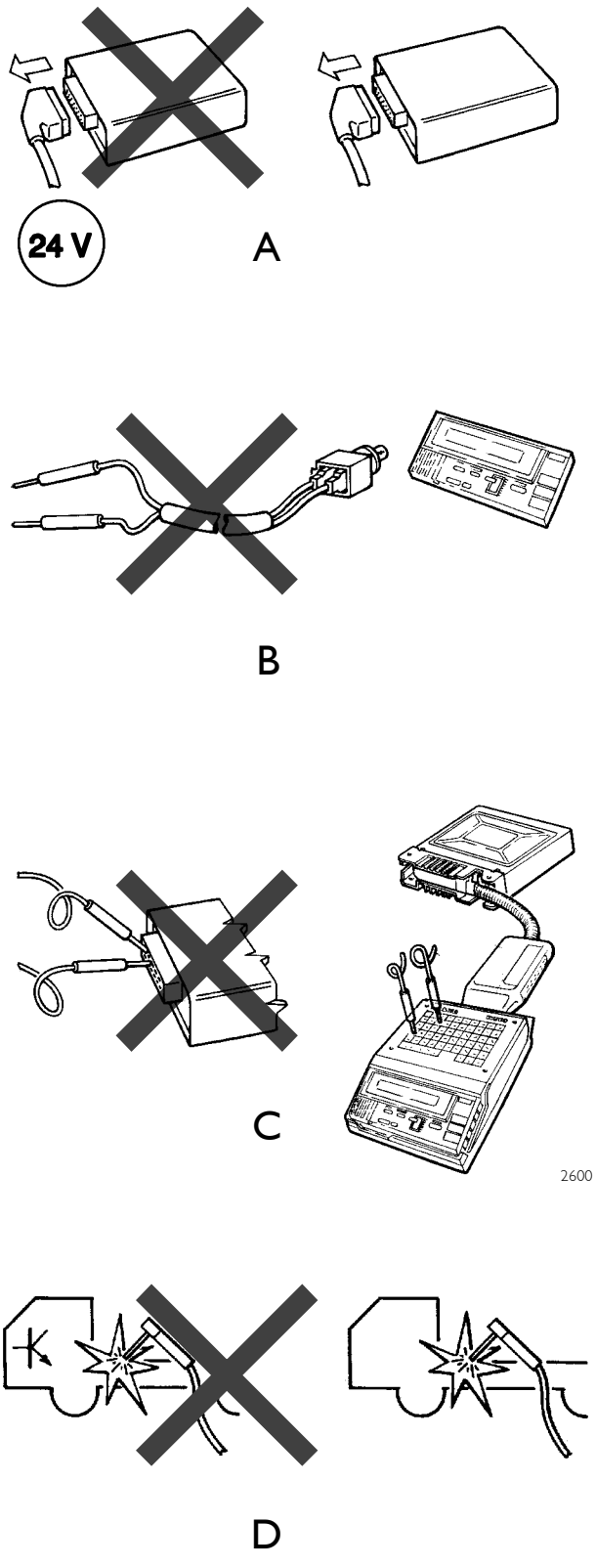

1. GENERAL WARNINGS FOR ELECTRONIC COMPONENTS

MAIN TECHNICAL CHARACTERISTICS

Engine	8140.63	8140.43C	8140.43B	8140.43S	8140.43N	F1AE0481A	F1AE0481B
No. of cylinders	4						
Totale displacement	2.798 cm3					2.300 cm^3	
Power (CV)	85	105	105	125	150	96	116
Vehicle combination	C-L-S 9				C-S 15	C-L-S 10	C-L-S 12
Injection	Indirect	direct					
Injection system	Mechanical pump	common rail					
Air feeding system	P.C./N.A.	I.D./T.C.A. - W.G.			T.C.A. - V.G.T.	T.C.A. - W.G.	
Antipollution system	E.GR + OXICAT	OXICAT	EGR*	EGR*	-	-	EGR*

Legend

* Only for combi vehicles with M1 homologation
Euro 2:8140.63 - 8140.43C
Euro 3:8140.43B - 8140.43S - 8140.43N - F1AE0481A - F1AE0481B

NOTE.:
8140.43B Engine shows the same torque and power curves of 8140. 43C Engine. Engines 8140.43B - F1AE0481A - F1AE0481B will be marketed in Europe (Euro 3) while 8140.43C will be marketed outside Europe.

ID = Direct injection
NA = Natural aspiration
PC = Indirect injection (pre-chamber)
TCA = Oversupplied with Intercooler
EDC = Injection pump with electronic rpm adjuster
OXICAT = Catalytic exhaust pipe
S = Independent rear wheels
L = Light with independent rear wheels
C = Twinned rear wheels

1. Electric system with negative terminal connected to the engine-frame-bonnet earth.
2. Rated supply voltage 12 V_{dc}, 460A, 110 Ah maintenance-free.
3. Electric system supply and battery charging with alternator that delivers 14V and maximum continuous current of 90A rectified and regulated inside the alternator.
4. Starting by 12 V / 2,3 kW starter motor
5. The relays used have an internal resistance in parallel with the coil of 680 Ω to reduce perturbations and current returns.

OUTFITS

OUTFITS										MODELS	ENGINE
COMBI	CUT-AWAY	CAB CAWL	CUTDOWN CAB COWL	TRUCK	DUAL CAB	VAN	SEMIGLAZED VAN.	VENDOR	MINIBUS		
X		X	X	X	X	X	X	X		35 S 9 C.V.	2,8 L PC/NA (85) 8140.63 MECH. INJECT.
X		X	X		X	X	X	X		29 L 9 C.V.	
X		X	X	X	X	X	X	X		35 S 11 C.V.	2,8 L ID/TC (105) 8140.63 B COMM. RAIL
X		X	X	X	X	X	X	X		29 L 11 C.V.	
X		X	X	X	X	X	X	X		35 S 13 C.V.	2,8 L ID/TC (125) 8140.63 S COMM. RAIL
						X	X	X		29 L 13 C.V.	
	X	X	X	X	X	X	X	X		35 C 9 C.V.	2,8 L PC/NA (85) 8140.63 MECH. INJECT.
	X	X	X			X	X	X		40 C 9 C.V.	
	X	X	X	X	X	X	X	X		35 C 11 C.V.	2,8 L ID/TC (105) 8140.63 B COMM. RAIL
	X	X	X			X	X	X	X	40 C 11 C.V.	
	X	X	X	X	X	X	X	X		35 C 13 C.V.	2,8 L ID/TC (125) 8140.63 S COMM. RAIL
	X	X	X			X	X	X	X	40 C 13 C.V.	
	X	X	X			X	X	X	X	50 C 11 C.V.	2,8 L ID/TC (105) 8140.63 B COMM. RAIL
	X	X	X			X	X	X		45 C 11 C.V.	
	X	X	X	X	X	X	X	X	X	50 C 13 C.V.	2,8 L ID/TC (125) 8140.63 S COMM. RAIL
	X	X	X			X	X	X		45 C 13 C.V.	
	X	X	X			X				60-65 C 15 C.V.	2,8 L VET (146) 8140.63 N
				X	X	X	X	X		29 L 10 C.V.	2,3 L ID/TCA (96) F1AE0481A COMM. RAIL
		X	X	X	X	X	X	X		35 S 10 C.V.	
	X	X	X	X	X	X	X	X		35-40 C 10 C.V.	
X				X	X	X	X	X		29 L 12 C.V.	2,3 L ID/TCA (116) F1AE0481B COMM. RAIL
X		X	X	X	X	X	X	X		35 S 12 C.V.	
	X	X	X	X	X	X	X	X		35-40 C 12 C.V.	

The following tables provide the dimensions of the different vehicle outfits, i.e. wheelbase , projection between rear wheels and the rear of the vehicle body, internal height in millimeters and max length of the bodywork in millimeters.

Vehicle perspective view of Cab Truck version

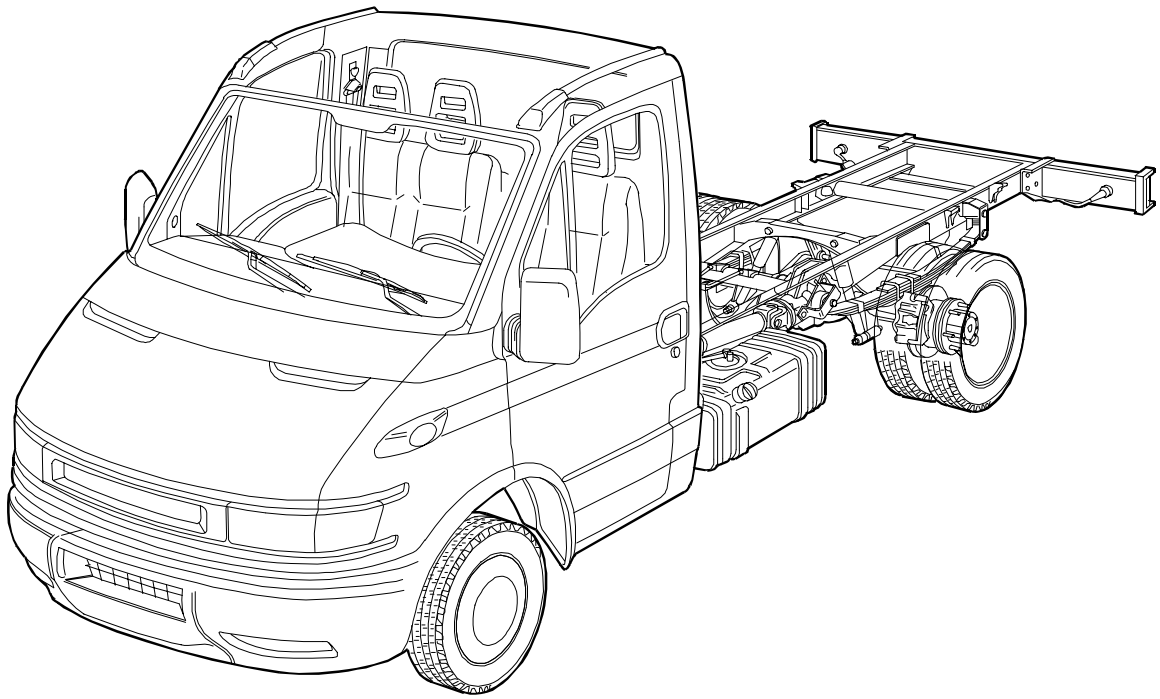

73727

MODELS	WHEELBASE	REAR PROJECTION	MAX BODYWORK LENGTH
29L - 355 35S	3000 3450 3750	920 1355 1665	3000 3885 4495
35C	3000 3450 3750 4100	1240 1355 1665 1715	3315 3880 4490 4890
50C	3450 3750 4350 4750	1355 1665 1885 2350	3750 4350 5335 6190

Vehicle perspective view of Dual Cab version

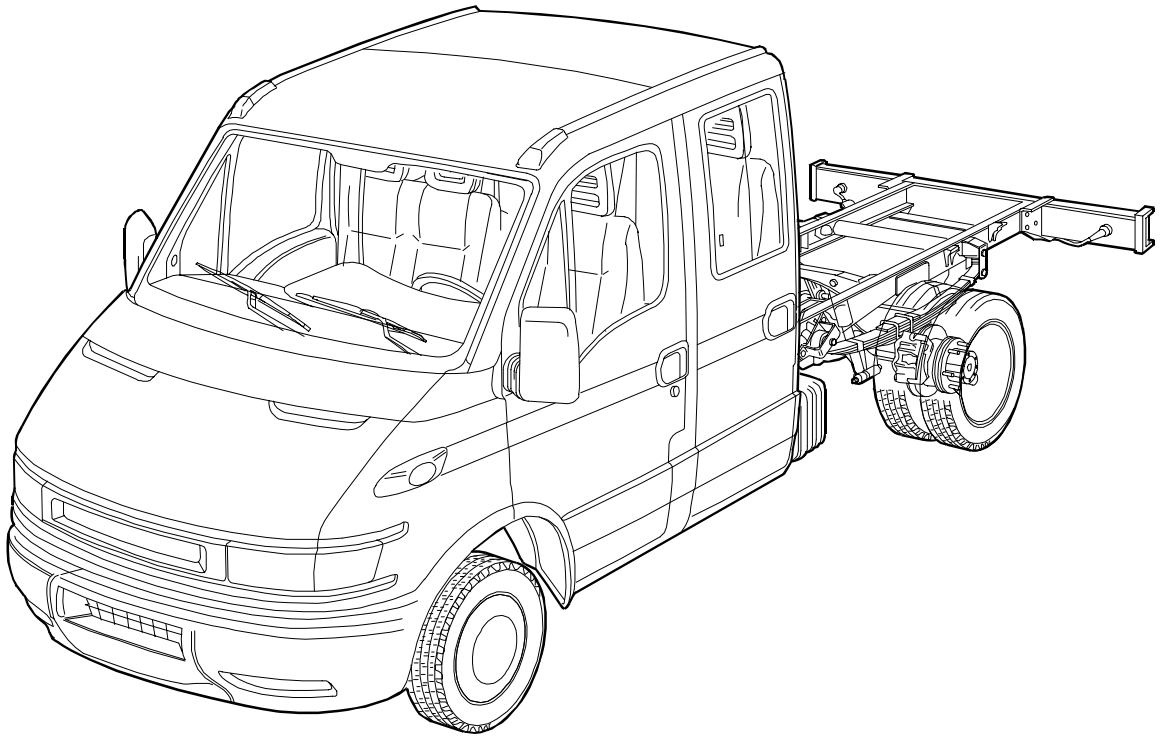

73730

MODELS	WHEELBASE	REAR PROJECTION	MAX BODYWORK LENGTH
29L - 35S	3000	920	2110
	3450	1355	3135
35S	3750	1665	3745
35C	3000	1240	2570
	3450	1355	3135
	3750	1665	3745
	4100	1715	4155
50C	3450	1355	2960
	3750	1665	3650
	4350	1885	4590

Vehicle perspective view of Van version

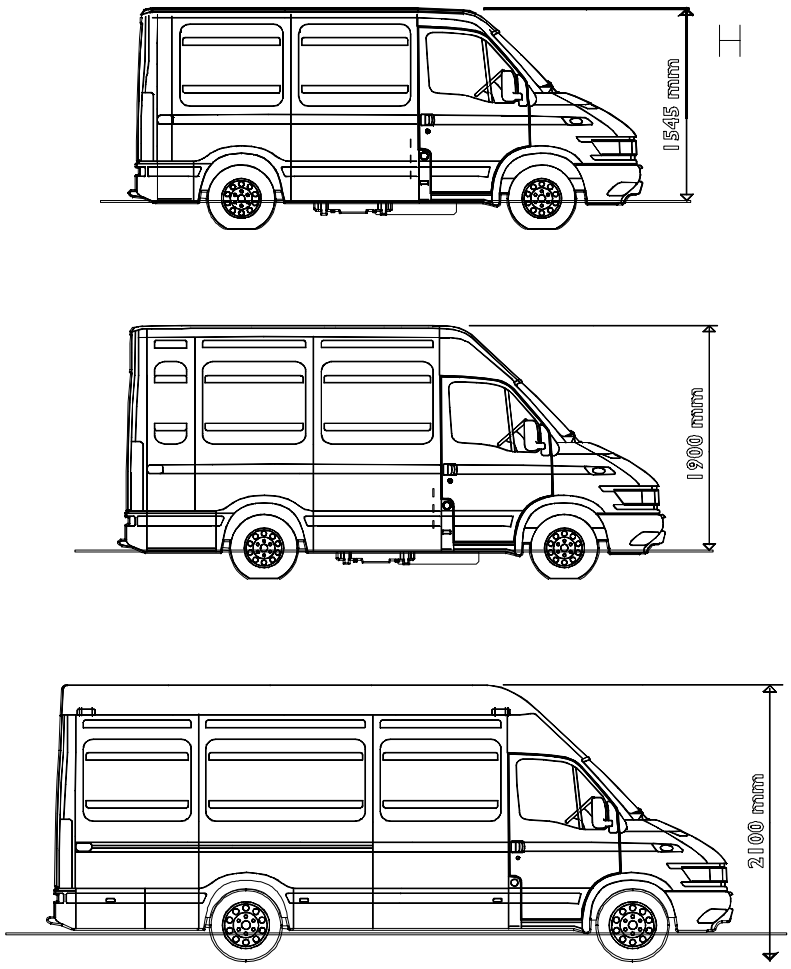

73729

MODELS	WHEELBASE	INTERNAL HEIGHT
29L	3000 3000 L 3300	1545 - 1900 1545 - 1900 1900
35S	3000 - 3000 L 3300 3950	1545 - 1900 1900 - 2100 1900 - 2100
35C	3000 - 3000 L 3300 - 3950	1545 - 1900 1900 - 2100
50C	3000 - 3000 L 3300 - 3950	1545 - 1900 1900 - 2100
65C	3000 3950	2100 2100

Vehicle perspective view of Semiglazed Van version

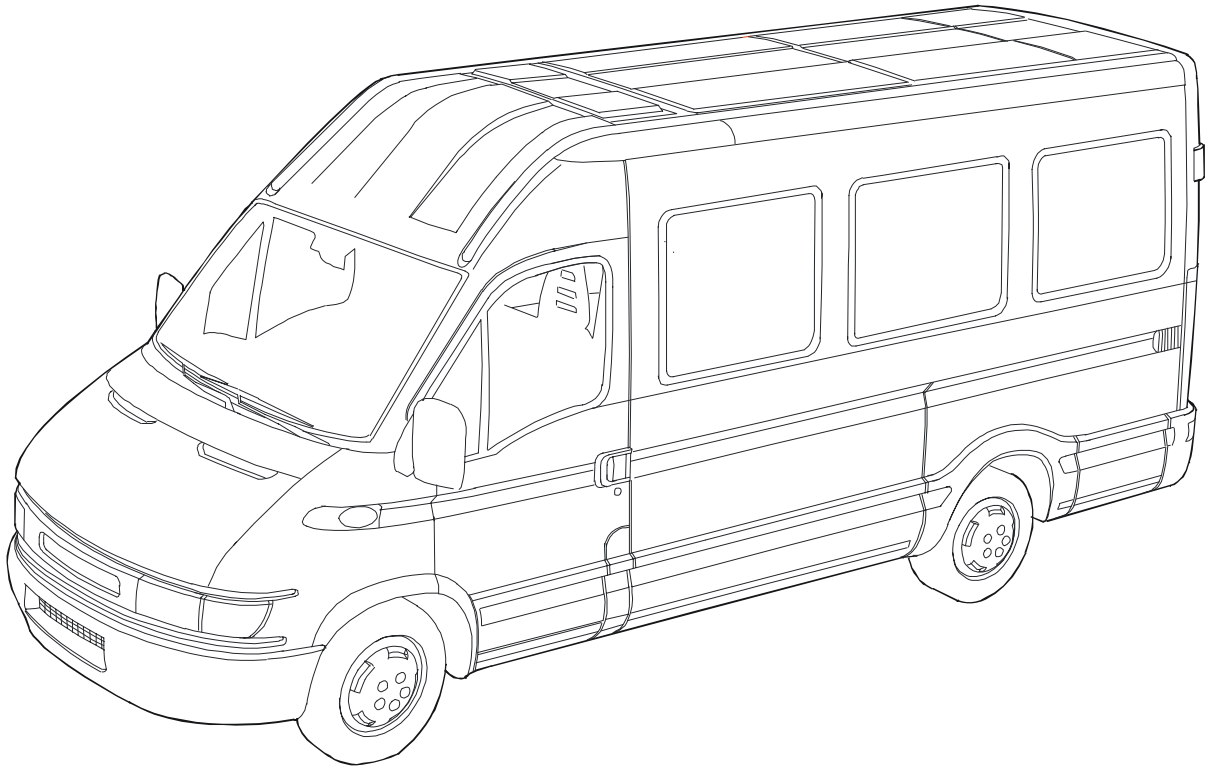

73723

MODELS	WHEELBASE	REAR PROJECTION	INTERNAL HEIGHT
29L - 35S	3000	1080 1480	1545 - 1900 1545 - 1900
	3300	1700	1900
	3950	2065	1900
35C - 40C	3000	1080 1480	1900 1900
	3300	1700	1900
	3950	2065	1900
45C - 50C	3300		1900
	3950		1900

Vehicle perspective view of Vendor version

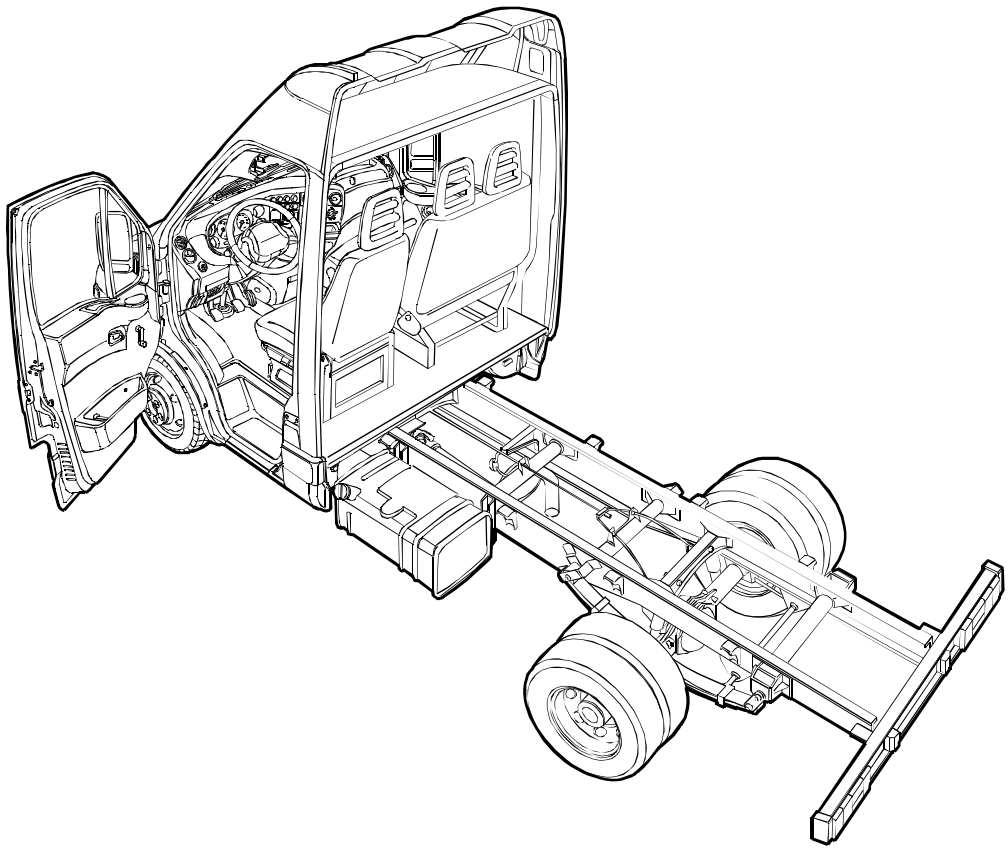

73724

MODELS	WHEELBASE	REAR PROJECTION	INTERNAL HEIGHT
29L	3000	1700	1900
35S	3300	1700	1900 - 2100
35C -40C	3300 3950	1700 2065	1900 - 2100
50C	- 3300 3950	- 1700 2065	1900 - 2100

Vehicle perspective view of the Bus version (derived from Vendor)

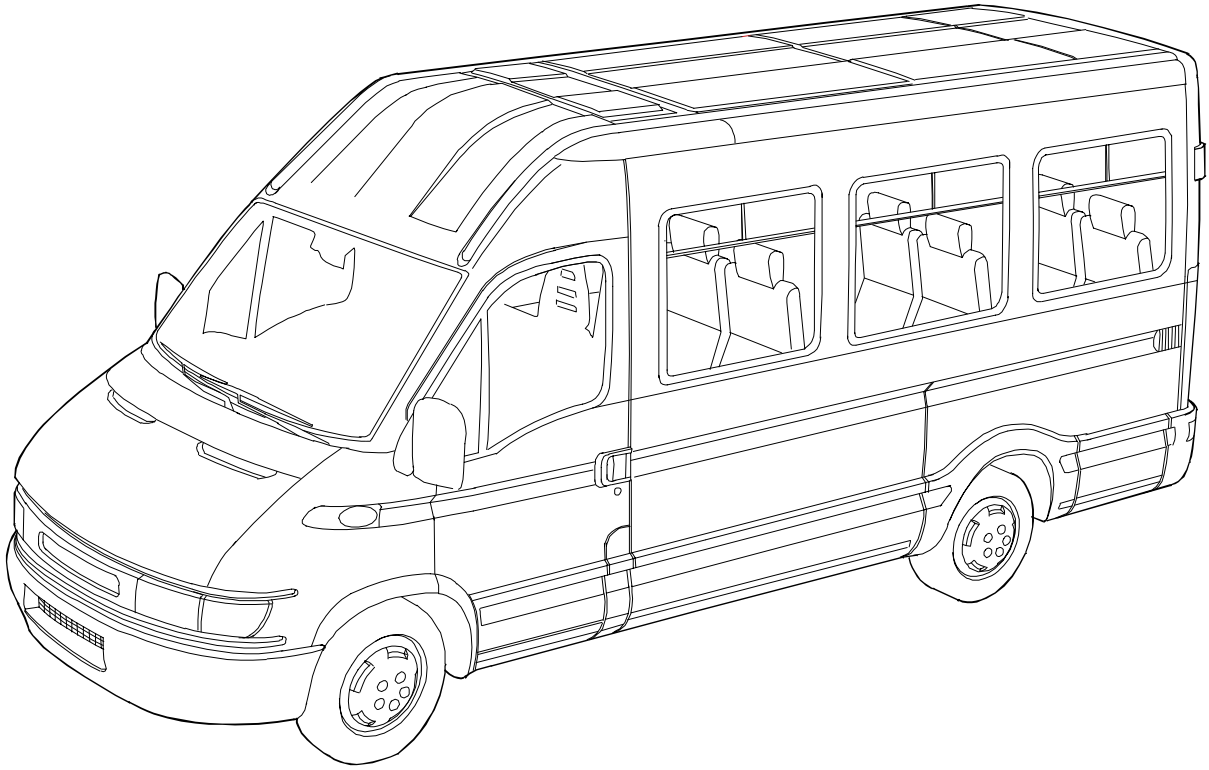

73725

MODELS	WHEELBASE	REAR PROJECTION	INTERNAL HEIGHT
40C	3300 3950	1700 2065	1900
50C	3950	2065	

ENGINE TECHNICAL / PERSPECTIVE VIEWS

Engine 8140.63 PC/NA (.9)

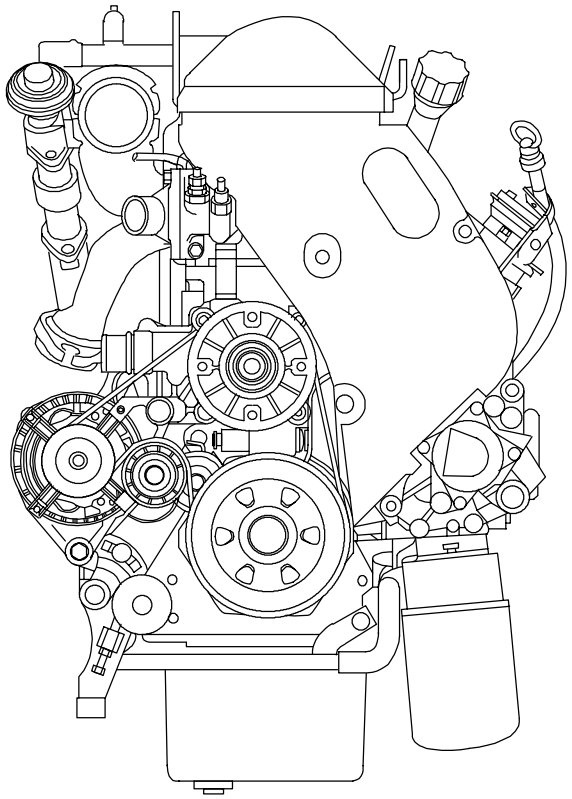

001300t

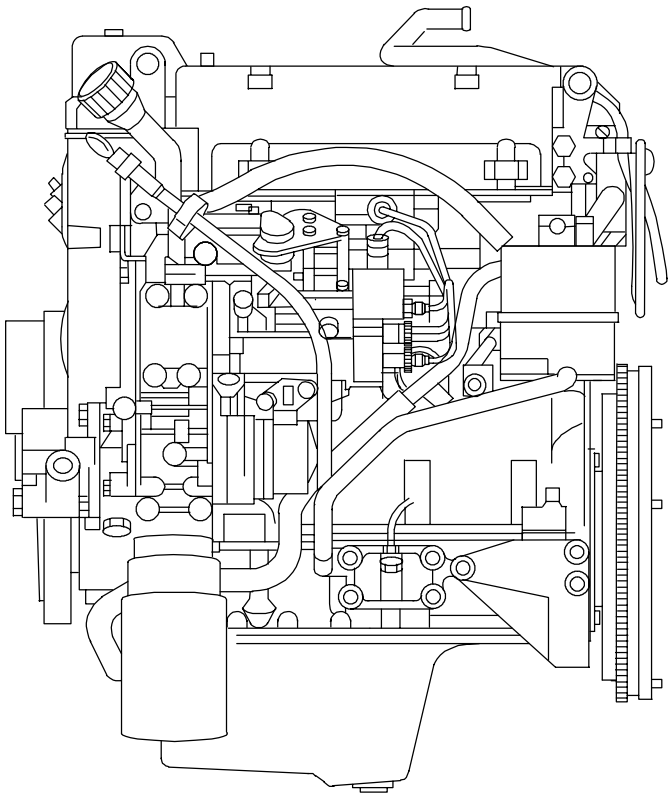

001257t

The major differences of this engine version with the 8140.63 engine fitted in the previous Daily.8 range are listed below:

- ❑ Injection pump with specific calibrations and electronic immobilizer
- ❑ Bitron electronic control unit for EGR and other engine devices
- ❑ Water pump, alternator and fan electromagnetic joint driven by the new Poly-V belt with automatic tensioner
- ❑ Air conditioning compressor driven by the new auxiliary Poly-V belt
- ❑ Flywheel with different inertia characteristics.

NOTE

The specific requirements of this course do not cover the detail of ALL existing differences on each component and therefore, reference should always be made to Spare Part Catalogue when ordering new parts.

This consideration should be made for all motors of the new range.

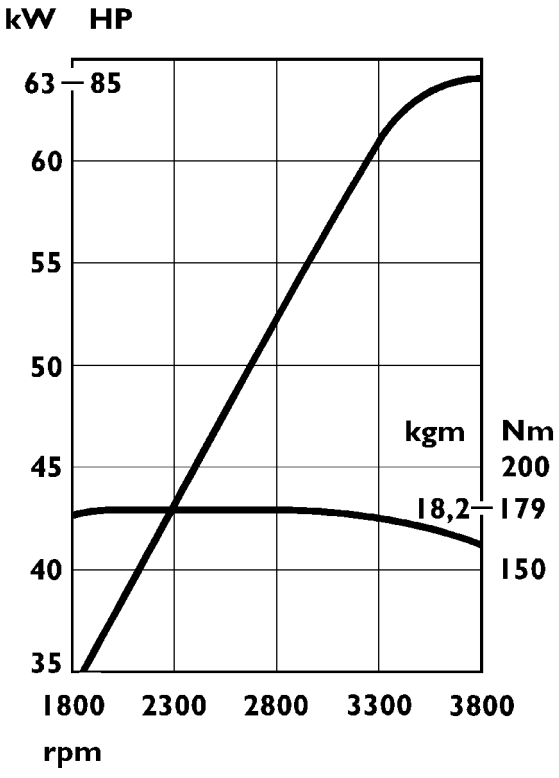

CHARACTERISTIC CURVE

Main components on engine and gearbox

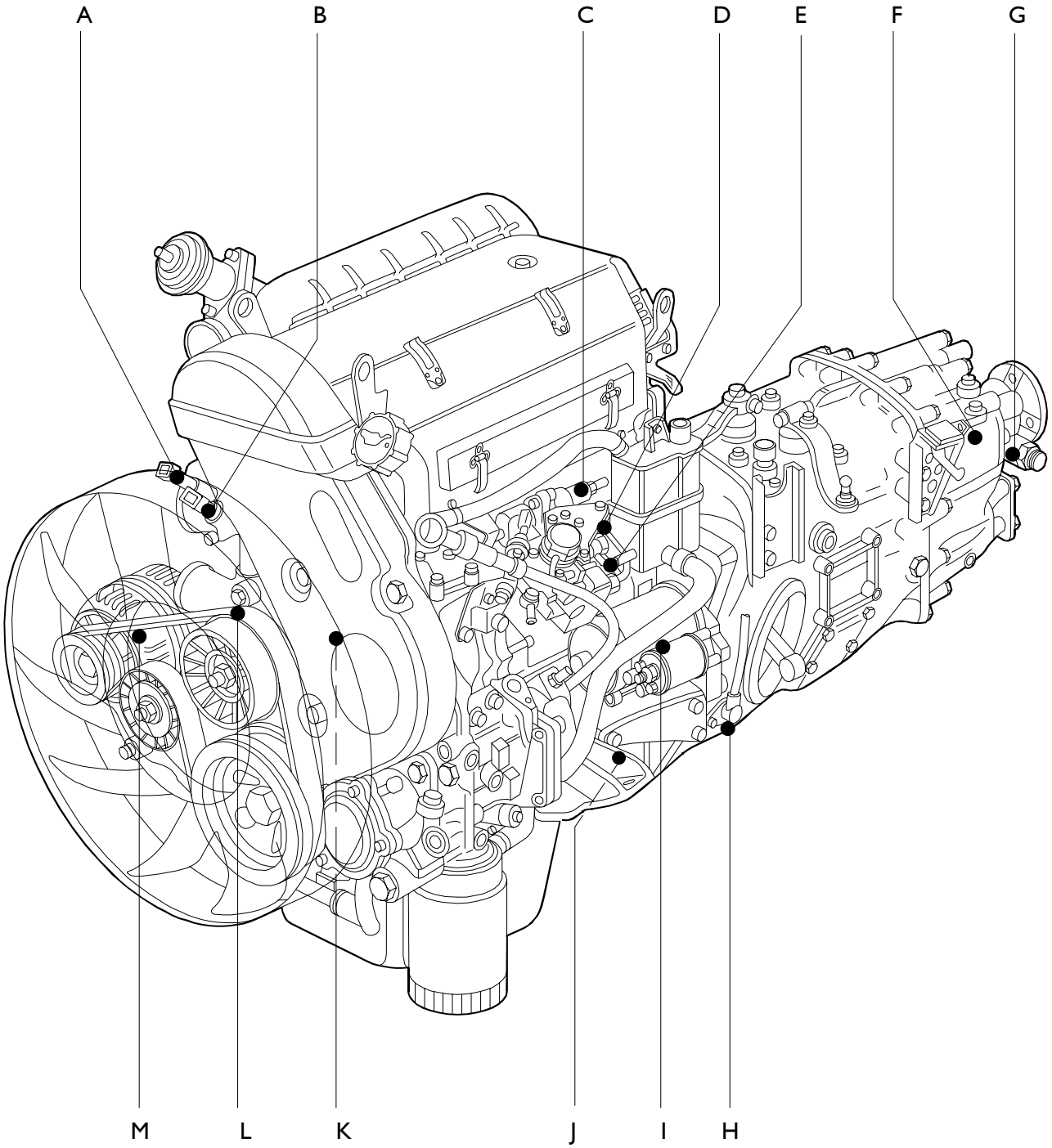

2. **A.** TRANSMITTER FOR ENGINE COOLANT TEMPERATURE WARNING GAUGE **- B.** ENGINE COOLANT FLUID TEMPERATURE SENSOR FOR EGR **- C.** VARIABLE RESISTANCE FOR ADVANCE VARIATOR CONTROL **- D.** RHEOSTAT FOR ANTIPOLLUTION DEVICE **- E.** ENGINE STOP SOLENOID **- F.** SWITCH FOR TURNING ON REVERSING LIGHT **- G.** TRANSMITTER FOR TACHOMETER AND TACHOGRAPH **- H.** ENGINE RPM SENSOR **- I.** STARTER MOTOR **- J.** LOW ENGINE OIL LEVEL INDICATOR CONTROL **- K.** SWITCH FOR LOW ENGINE OIL PRESSURE SIGNAL **- L.** ELECTROMAGNETIC JOINT FOR ENGINE COOLING **- M.** SELF-RECTIFYING ALTERNATOR WITH INCORPORATED VOLTAGE REGULATOR

Engine 8140.43C ID/TCA (.11)

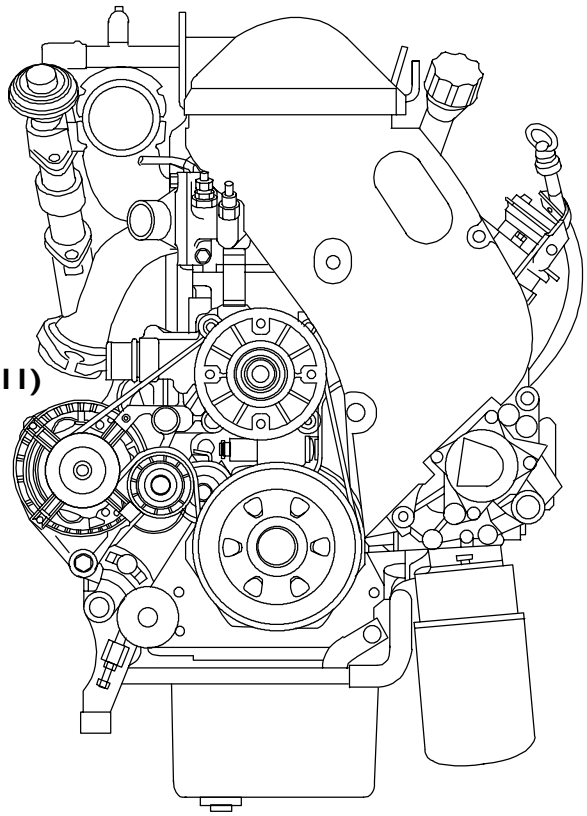

001259t

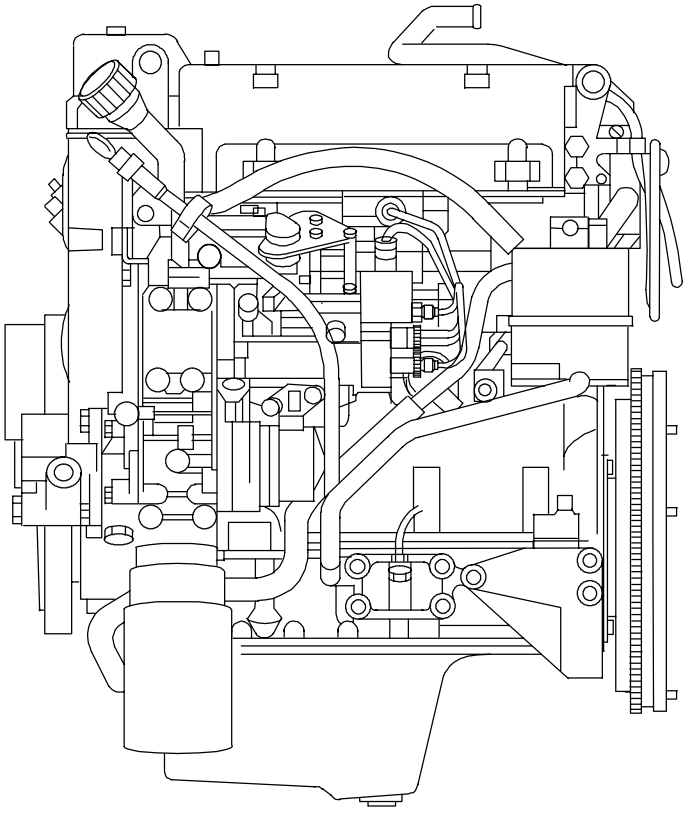

001260t

The major differences of this engine version with the 8140.43 engine fitted in the previous Daily .9 range are listed below:

- ❑ Injection pump with specific calibrations and electronic immobilizer
- ❑ Turbosupercharger installed in a different location
- ❑ New piping between intercooler and intake manifold
- ❑ Water pump, alternator and fan electromagnetic joint driven by the new Poly-V belt with automatic tensioner
- ❑ Air conditioning compressor driven by the new auxiliary Poly-V belt
- ❑ Flywheel with different inertia characteristics.

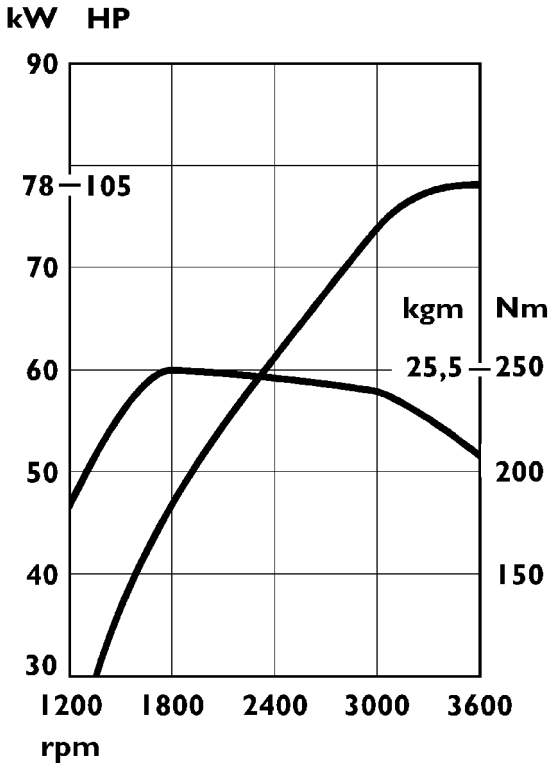

001261t

CHARACTERISTIC CURVE

Main components on engine and gearbox

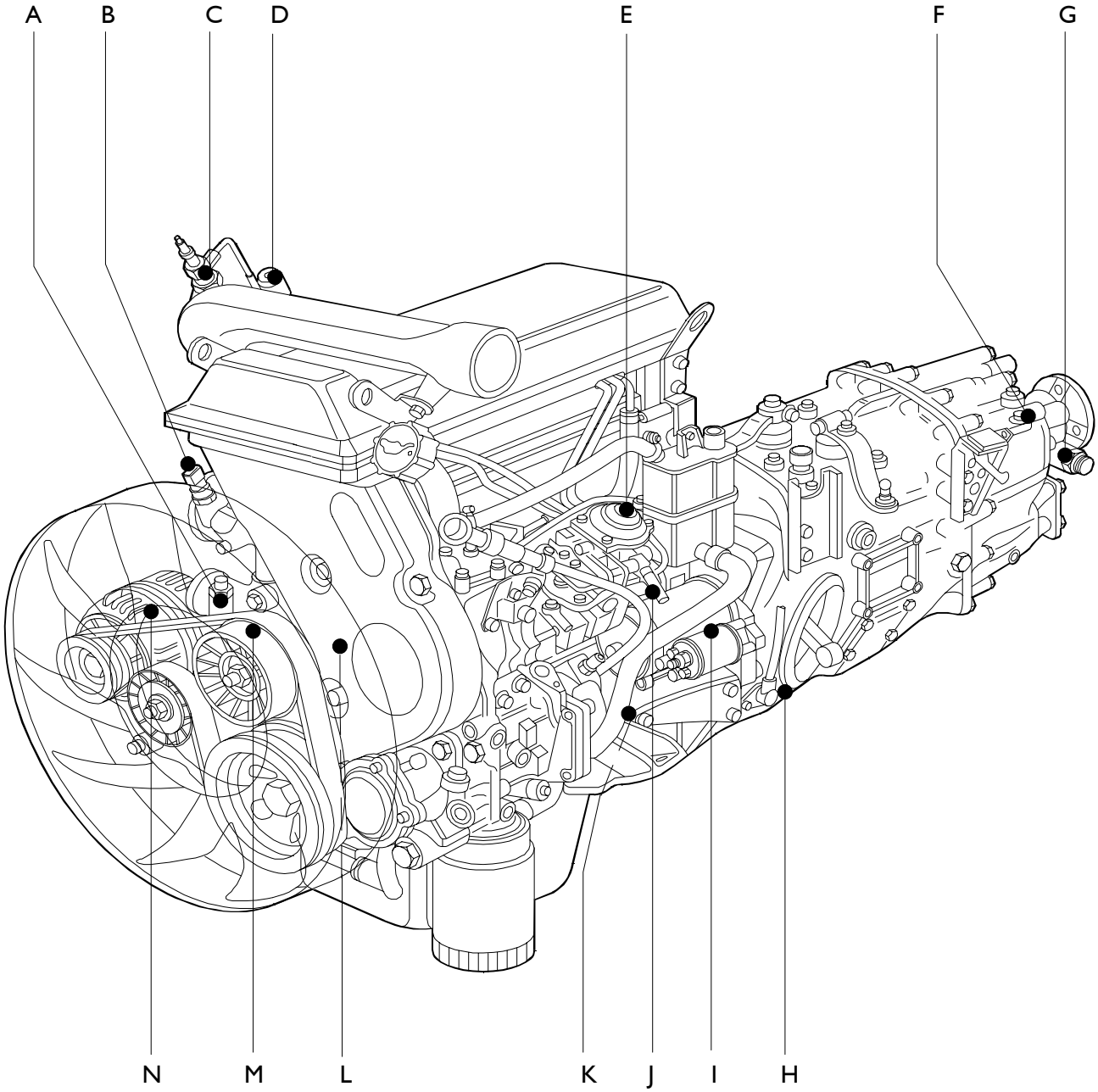

8574

3. **A**. SWITCH FOR TURNING ON ADVANCE VARIATOR - **B.** TRANSMITTER FOR ENGINE COOLANT TEMPERATURE WARNING GAUGE - **C.** THERMAL STARTER - **D**. SOLENOID VALVE FOR FUEL TANK CONNECTION WITH THE ATMOSPHERE FOR THERMAL STARTER - **E.** VARIABLE RESISTANCE FOR ADVANCE VARIATOR CONTROL - **F.** SWITCH FOR TURNING ON REVERSING LIGHT - **G.** TRANSMITTER FOR TACHOMETER AND TACHOGRAPH - **H.** ENGINE RPM SENSOR - **I.** STARTER MOTOR - **J.** ENGINE STOP SOLENOID - **K**. LOW ENGINE OIL LEVEL INDICATOR CONTROL **- L.** SWITCH FOR LOW ENGINE OIL PRESSURE SIGNAL - **M.** ELECTROMAGNETIC JOINT FOR ENGINE COOLING - **N.** SELF-RECTIFYING ALTERNATOR WITH INCORPORATED VOLTAGE REGULATOR

Engine 8140.43S Unijet (.13)

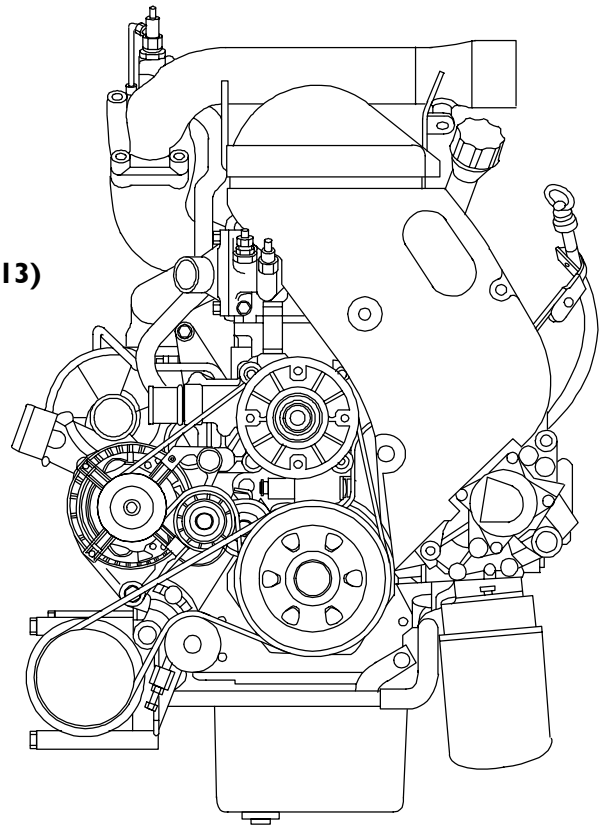

001262t

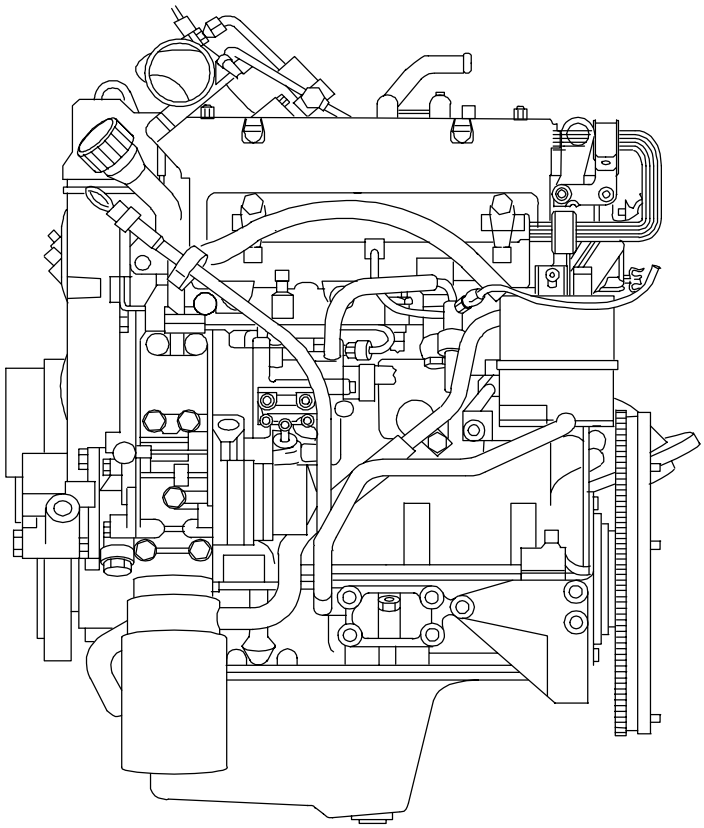

001263t

The major differences of this engine version with the 8140.43 engine fitted in the previous Daily .11 range are listed below:

- ❑ Electronic control Common Rail injection with electronic control unit type MS6.3 located in the engine compartment
- ❑ Turbosupercharger installed in a different location
- ❑ New piping between intercooler and intake manifold
- ❑ Water pump, alternator and fan electromagnetic joint driven by the new Poly-V belt with automatic tensioner
- ❑ Air conditioning compressor driven by the new auxiliary Poly-V belt
- ❑ Flywheel with different inertia characteristics and special design (for new induction sensor)
- ❑ Special design camshaft pulley (for new induction sensor).

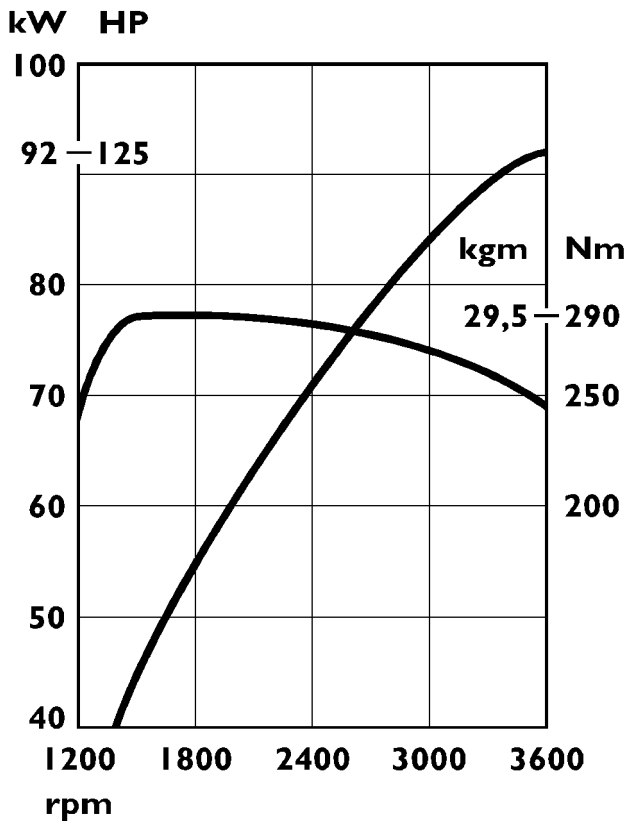

001264t

CHARACTERISTIC CURVE

Main components on engine and gearbox

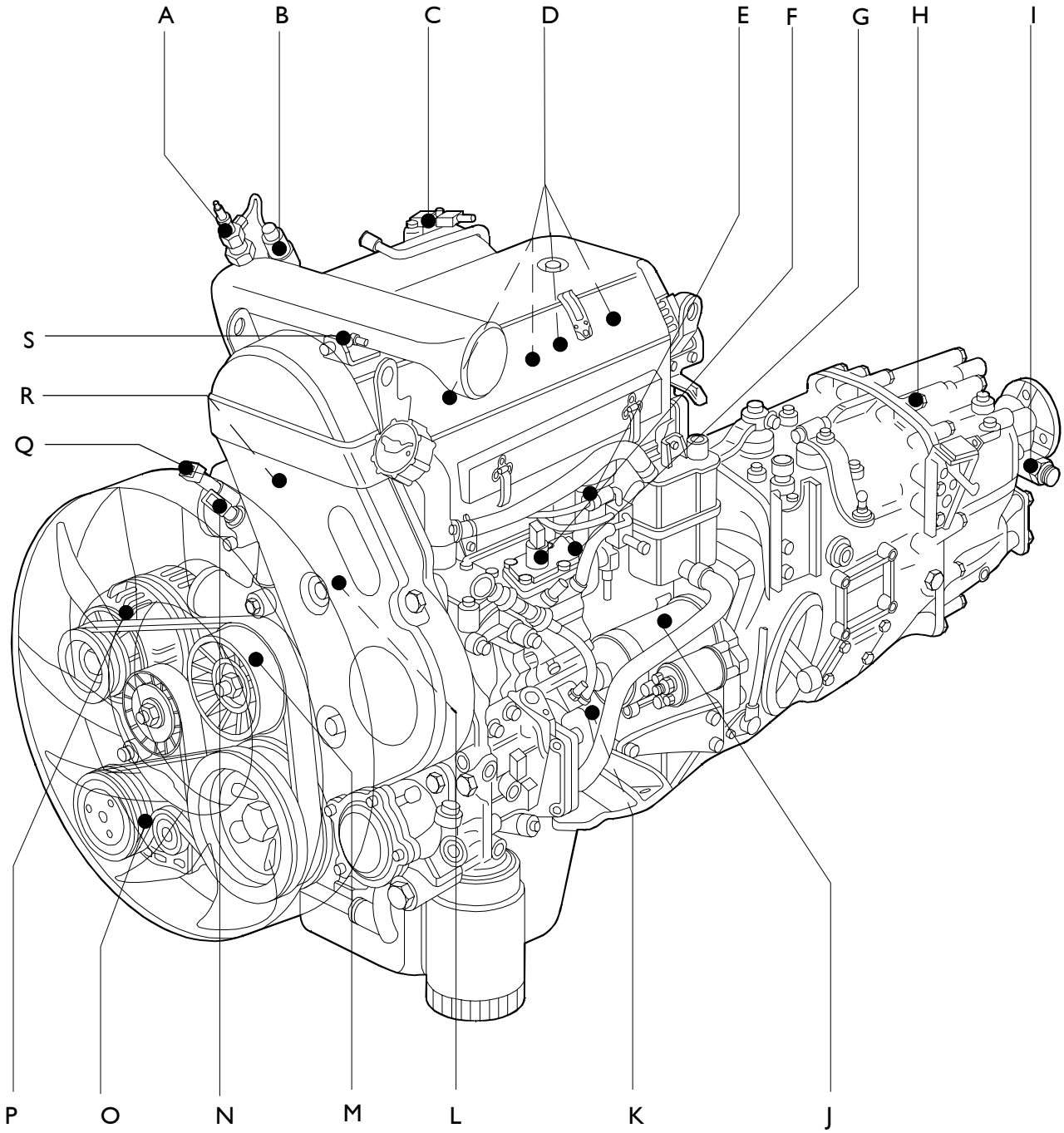

8575

4. **A.** THERMAL STARTER - **B.** SOLENOID VALVE FOR CONNECTION WITH FUEL TANK FOR THERMAL STARTER - **C.** TURBO-BLOWER AIR PRESSURE AND TEMPERATURE SENSOR FOR EDC - **D**. SOLENOID VALVES FOR ELECTRONIC INJECTION - **E.** SENSOR FOR FUEL PRESSURE ADJUSTMENT - **F.** SOLENOID VALVE FOR RADIALJET PUMP CONTROL - **G.** SOLENOID VALVE FOR PRESSURE ADJUSTMENT - **H.** SWITCH FOR TURNING ON REVERSING LIGHTS - **I.** TRANSMITTER FOR TACHOMETER AND TACHOGRAPH - **J.** STARTER MOTOR - **K**. LOW ENGINE OIL LEVEL INDICATOR CONTROL - **L**. SWITCH FOR LOW ENGINE OIL PRESSURE SIGNAL - **M**. ELECTROMAGNETIC JOINT FOR ENGINE COOLING - **N.** LOW ENGINE COOLANT TEMPERATURE SENSOR FOR EDC - **O.** COMPRESSOR FOR AIR CONDITIONING SYSTEM - **P**. SELF-RECTIFYING ALTERNATOR WITH INCORPORATED VOLTAGE REGULATOR - **Q**. TRANSMITTER FOR ENGINE COOLANT TEMPERATURE GAUGE - **R**. ENGINE RPM SENSOR ON FLYWHEEL - **S.** ENGINE RPM SENSOR ON TIMING GEAR

Engine 8140.43B (.11)

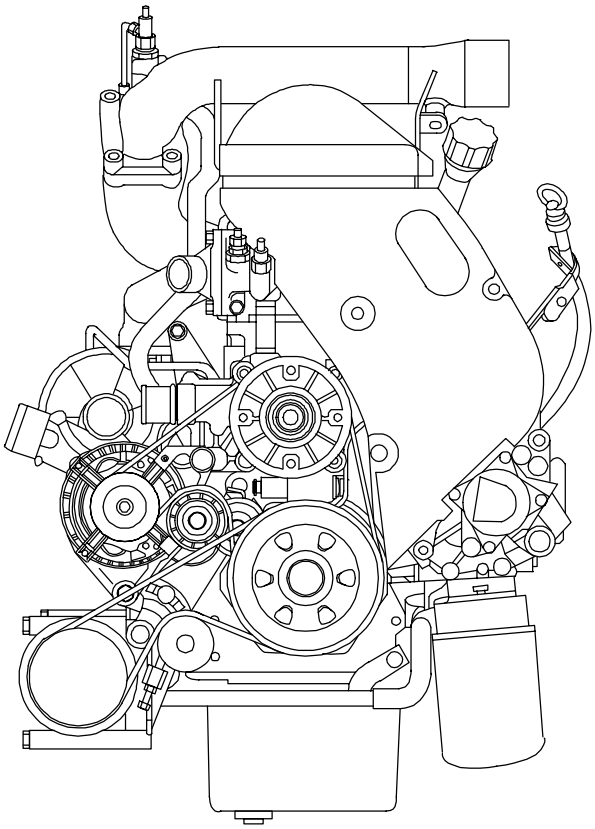

001262t

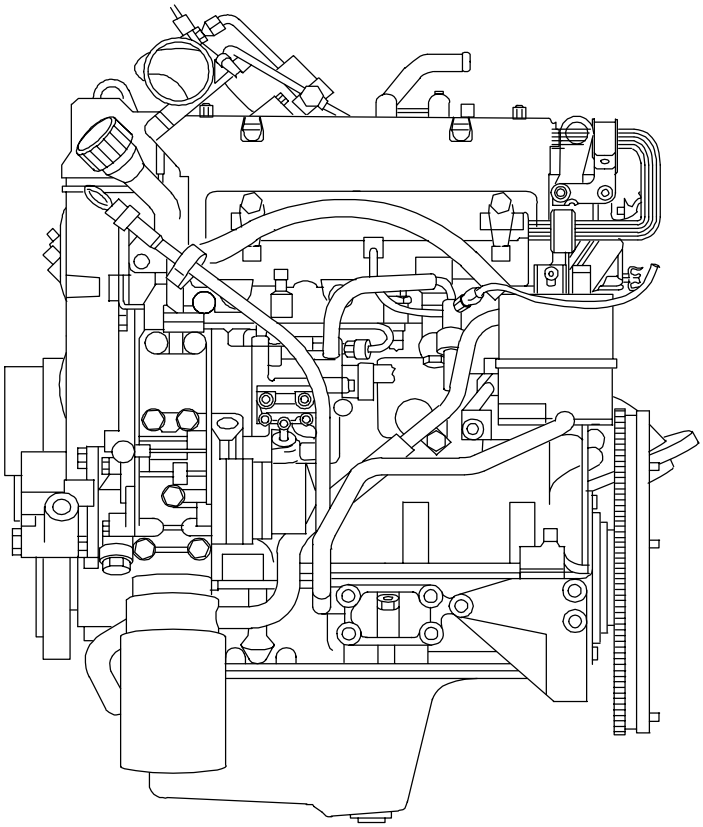

001263t

The major differences of this engine version with the 8140.43C engine fitted in the previous Daily.11 range are listed below:

❑ Electronic control Common Rail injection with electronic control unit type MS6.3 located in the engine compartment.

❑ Turbosupercharger with different waste gate valve calibration (actuator) installed in a different location.

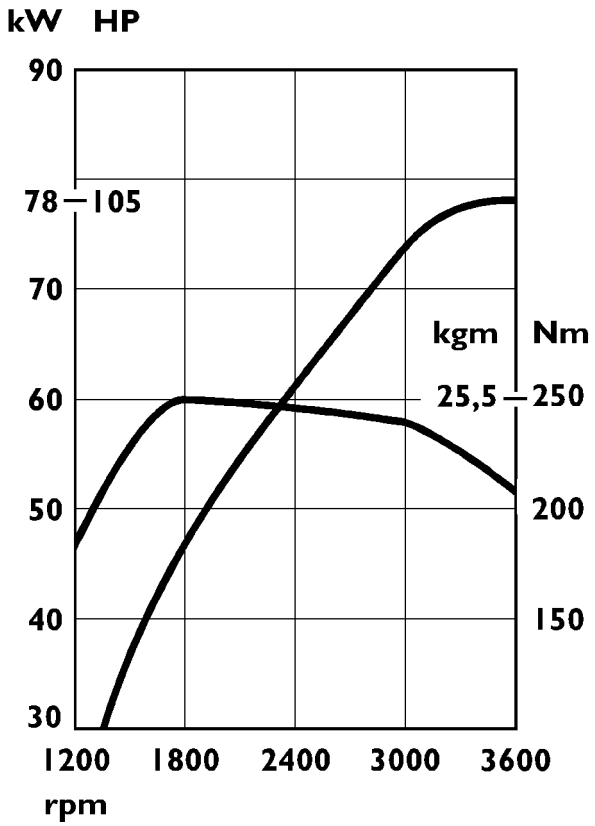

001416t

CHARACTERISTIC CURVE

Engine 8140.43N (.15)

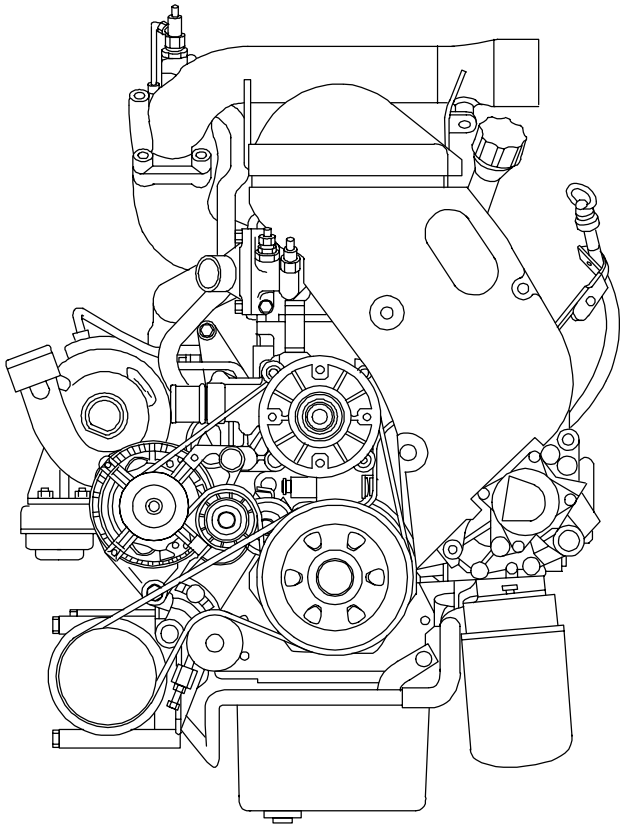

001022t

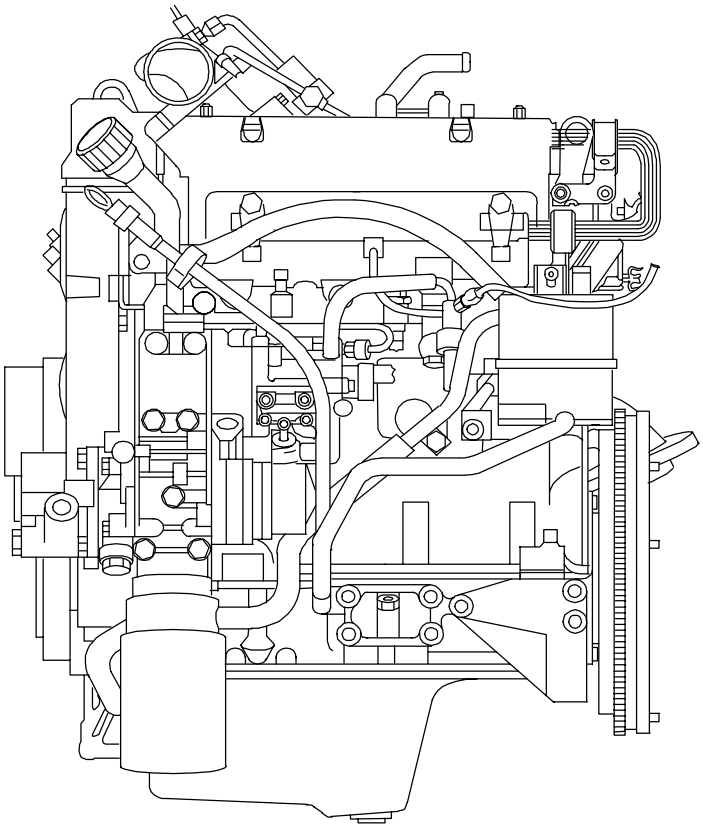

001032t

It differs from the 8140.43S engine powering the previous Daily .13 range mainly for:

- ❑ GARRETT GT 2256 turbo compressor.
- ❑ Centre piloted electro valve vacuum controlled compressed air actuator.

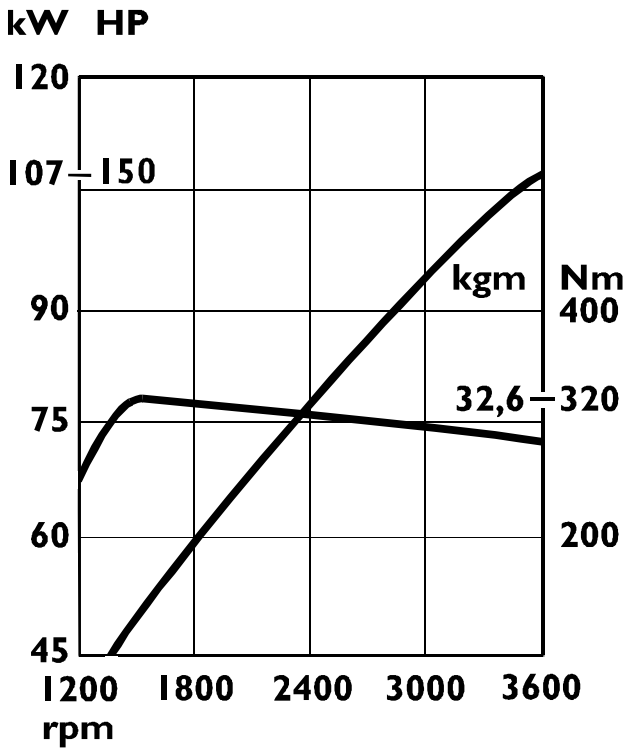

CHARACTERISTIC CURVE

Engine F1A Unijet (.10 - .12)

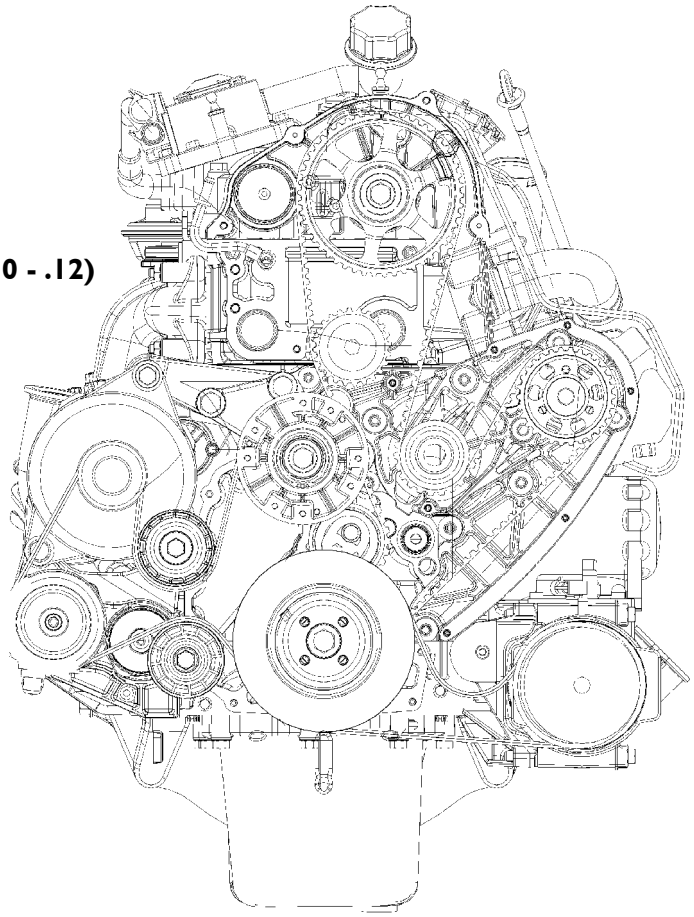

74272

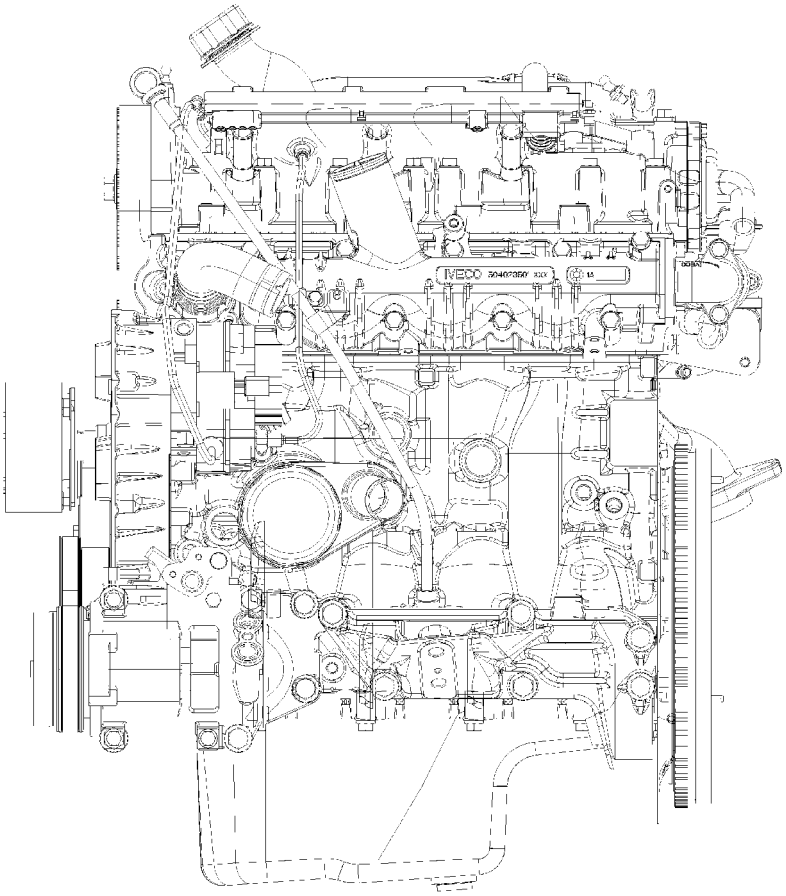

74273

The F1A engine differs from previous versions in the following features:

- ❑ Displacement reduced from 2800 to 2300.
- ❑ Head cam twin shaft timing aluminium head.
- ❑ Automatic tensioner controlled teethed belt timing control.
- ❑ Four valves per cylinder moved by support shaft-free rocker arms.
- ❑ Rocker arm reaction hydraulic tappets.
- ❑ Vacuum pump integrated into the oil pump.
- ❑ EGR system complete with exhaust gas/water heat exchanger.
- ❑ New oil vapour recovery and re-circulation blow-by circuit
- ❑ Fan, servo pump, alternator and compressor control V pole belts tensioned with automatic tensioners.
- ❑ Electromagnetic junction fan.
- ❑ New 4-plug preheat circuit.

CHARACTERISTIC CURVE

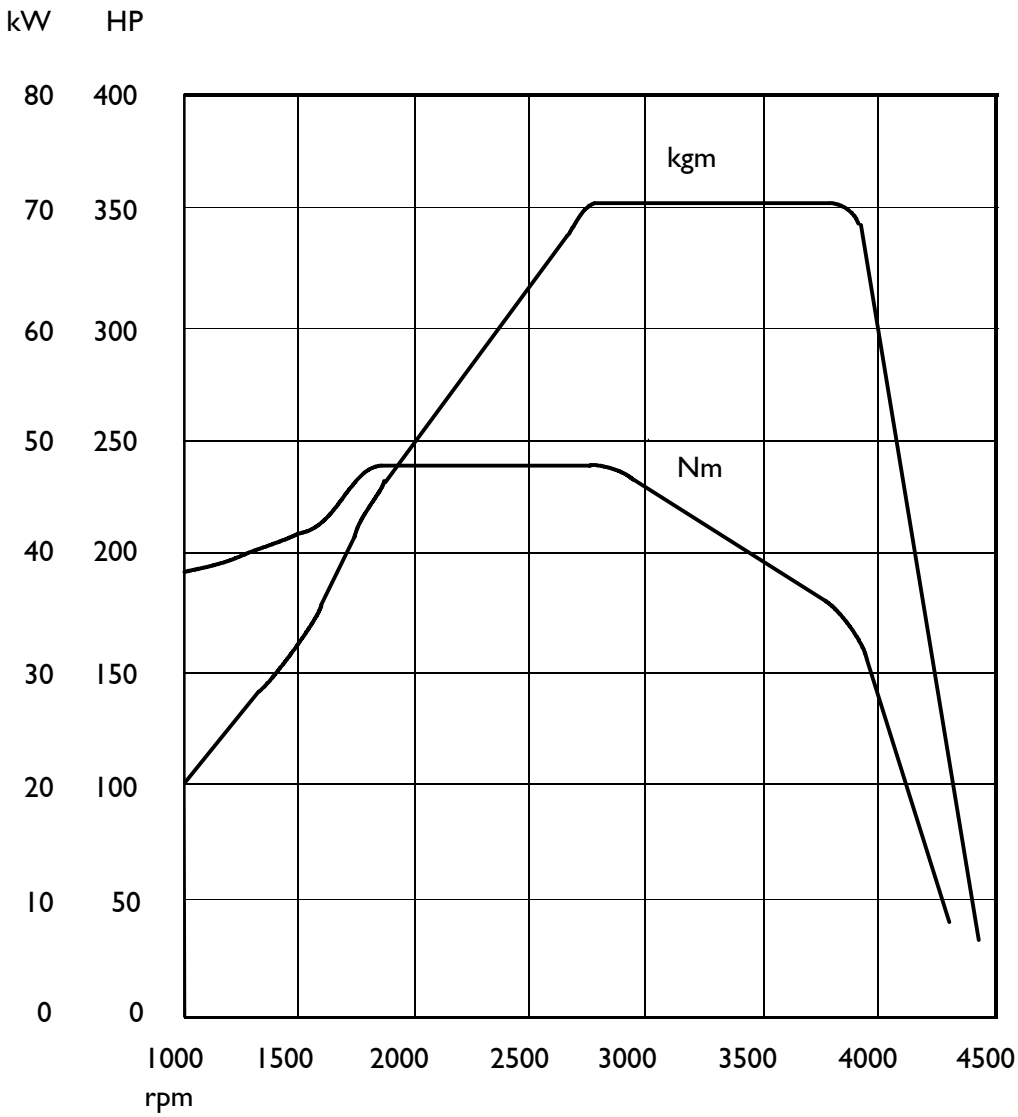

74266

Main components on engine and gearbox

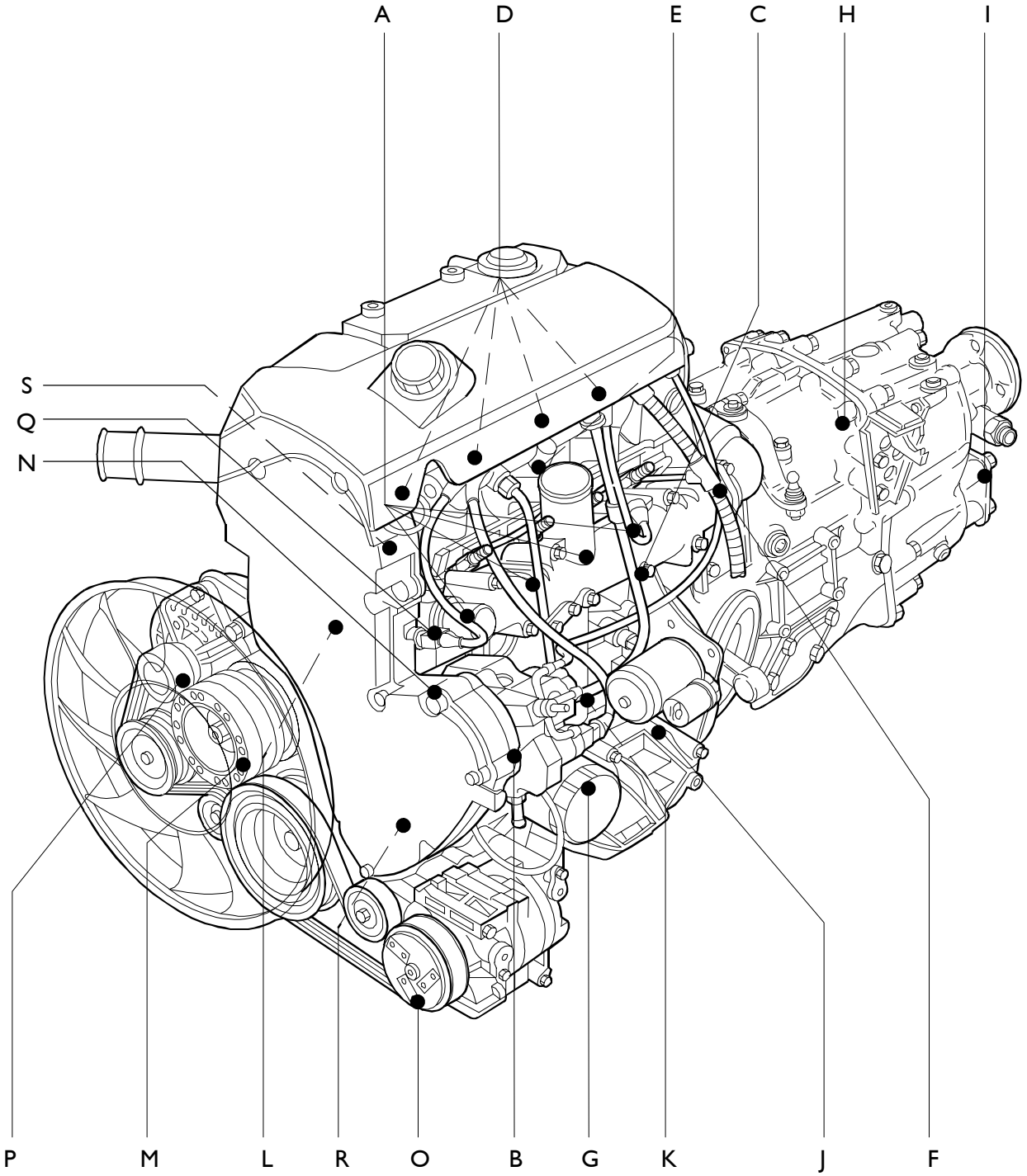

74256

5. **A.** PRE HEAT PLUGS - **B.** HIGH PRESSURE PUMP - **C.** TURBO-BLOWER AIR PRESSURE AND TEMPERATURE SENSOR FOR EDC - **D.** SOLENOID VALVES FOR ELECTRONIC INJECTION - **E.** SENSOR FOR FUEL PRESSURE ADJUSTMENT - **F.** EXHAUST GAS HEAT EXCHANGER (ONLY WITH THE EGRE SYSTEM) - **G.** SOLENOID VALVE FOR PRESSURE ADJUSTMENT - **H.** SWITCH FOR TURNING ON REVERSING LIGHTS - **I.** TRANSMITTER FOR TACHOMETER AND TACHOGRAPH - **J.** STARTER MOTOR - **K.** LOW ENGINE OIL LEVEL INDICATOR CONTROL - **L.** SWITCH FOR LOW ENGINE OIL PRESSURE SIGNAL - **M.** ELECTROMAGNETIC JOINT FOR ENGINE COOLING - **N.** LOW ENGINE COOLANT TEMPERATURE SENSOR FOR EDC - **O.** COMPRESSOR FOR AIR CONDITIONING SYSTEM - **P.** SELF-RECTIFYING ALTERNATOR WITH INCORPORATED VOLTAGE REGULATOR - **Q.** TRANSMITTER FOR ENGINE COOLANT TEMPERATURE GAUGE - **R.** ENGINE RPM SENSOR ON FLYWHEEL - **S.** ENGINE RPM SENSOR ON TIMING GEAR

TECHNICAL CODES

03000 Self-rectifying alternator with built in voltage regulator
08000 Starter motor
12006 Motor for adjustable mirrors
12010 Motor for locking right door
12011 Motor for locking left door
12012 Compressor for air conditioning system
12025 Power takeoff motor
12026 Motor, winch control
12027 Motor for opening or closing left side door lock
19005 Thermal starter
19010 Heater plug
20000 Starter battery
22001 Horn
22039 Bell for parking lights on signal
25003 Relay for switching on fog lights
25006 Brake lights relay
25014 Relay for enablement of parking lights with engine off
25023 Relay for disconnection of low beam lights with parking lights on
25104 Relay for switching off Retarder with ABS engaged
25209 Relay for switching off services during starting
25222 Relay for allowing connection of thermal starter
25223 Relay for allowing connection of thermal starter fuel tank with atmosphere
25307 Relay for controlling air conditioning compressor
25336 Relay for engine cooling electromagnetic joint
25337 Relay for disconnecting air-conditioning system compressor
25340 Relay, compressor operation, signal to EDC
25620 Relay for fuel filter clogged signal
25704 Relay for switching NC/NO signal for third steering axle
25705 Relay for enabling point switching on
25810 Relay for controlling diesel heating circuit
25811 Ignition timer relay (KSB)
25818 Relay for switching on heated windscreen
25837 Relay for connection of fuel pump
25858 Relay for EDC connection
25926 Relay for enablement of suspension lifting and stopping of suspension lowering function
25927 Relay for enablement of suspension lowering and stopping of suspension lifting function
25928 Relay, rear window heating
28002 Engine stopping electromagnet
30003 Multifunctional side headlight
30011 Fog light
32002 Front direction indicator
33001 Side direction indicator
33004 Side marker lamp
34000 Multifunctional rear light
34007 Stop light
34009 Rear fog lamp
35000 Number plate light
37001 Front dimensions light
39020 Ashtray light
39022 Courtesy light for cabin interior with adjustable spot light

39025	Lamp for lighting rear hatch
39026	Lamp for lighting side hatch
40011	Electronic tachograph
40030	Sender unit for electronic tachometer
40031	Sender unit for electronic tachograph
40046	Inductive type chassis height sensor (rear axle)
42035	Absolute pressure sensor
42102	Switch signalling handbrake applied
42350	Switch signalling body tilted
42351	Switch signalling air filter blocked
42354	Switch for air suspension system failure
42374	EDC clutch switch
42550	Switch signalling engine oil pressure
42552	Fuel filter clogged indicator switch
42608	Coolant pressure signalling 3-switch assembly
44031	Sender unit, fuel level indicator with w/lamp contact
44033	Insufficient brake fluid level gauge control
44036	Insufficient radiator coolant level gauge control
44037	Insufficient power assisted steering fluid level gauge control
44044	Engine oil low level indicator control
47034	Engine coolant temperature sensor (EGR)
47035	Engine coolant temperature sensor
47104	Switch for engaging engine cooling electromagnet coupling
47106	Switch for engaging diesel fuel heating
47109	Switch for connection of ignition timer (KSB)
47207	Switch/sender unit, engine water temperature indicator
48035	Engine rpm sensor
48042	Engine rpm sensor (on timing gear)
52005	Switch with built in w/l for heated rear view mirrors
52036	Switch with built in w/l for engaging windscreen heater
52082	Switch with built-in w/lamp, fog lights
52083	Switch with built-in w/lamp, hazard lights
52084	Switch with incorporated warning light for switching on rear differential lock
52090	Suspension levelling switch (ECAS)
52091	Switch with incorporated warning light for switching on rearscreen heating
52093	Switch for tail hatch locking safety
52310	Switch for adjustable mirrors
52312	Switch controlling headlamp alignment adjustment
52502	Ignition switch for services with starting
53004	Switch for headlamp washer
53041	Switch for checking EDC system
53051	Suspension lifting switch
53052	Suspension lowering switch
53300	Switch for driver's side electric window
53302	Switch for passenger side electric window
53501	Switch signalling vehicle stopped
53503	Switch signalling reversing lights
53505	Rear differential lock engaged indicator switch
53509	Switch for switching on interior lights
53565	Switch for signalling brake pedal fully pressed
53590	Switch for bonnet open signal

54032	8 function steering column switch unit
58700	Led, battery charging failure
58701	Led, EDC failure
58702	Led, preheating on
58703	Led, ABS failure
58709	Trailer direction indicators ON LED
58710	Water in fuel pre-filter indicator LED
58713	Led, ECAS system failure
58715	Total power take off (PTO) ON indicator LED
58717	Led, Immobilizer on
58718	Brake system failure warning led
58719	Led per segnalazione freno a mano inserito
58720	Led, radiator water level
58722	Led, engine oil pressure (low)
58725	Led, air cleaner restriction
58728	Power steering fluid level w/lamp
58730	Engine oil level w/lamp
58735	Led for indicating rear differential lock on
58918	32-optical indicator panel
61002	3 diode holder container 3A (with + common)
61101	Diesel fuel heater resistor
61102	Rheostat for antipollution device (EGR)
61103	Variable resistance for ignition timer control (KSB)
61106	Windscreen heater resistor
61124	Resistance for rearscreen heating
64000	Electric windscreen washer pump
65000	Windscreen wiper unit
66005	Headlamp washer pump
66010	Headlamp washer timer
68000	Radio equipment
68001	Speaker
72016	13-pole coupling for 12V connection to trailer
72027	38-pole coupling for connection with IVECO
78000	Solenoid valve for connection with atmosphere from fuel tank for thermal starters
78013	Pressure regulator solenoid valve
78015	Solenoid valve to cut out third pumping element
78208	Transmission total power take-off solenoid valve
78209	Solenoid valve for antipollution devices (EGR)
78233	Vehicle raising solenoid valve assembly
78247	Solenoid valve for electronic injection
78248	Solenoid valve for variable geometry turbine order
80000	Motor for right electric window
80001	Motor for left electric window
82000	Windscreen defrosting control unit
82010	Joint between cab-bonnet cable and climate control cable
84020	Outdoor temperature sensor
85000	Cigar lighter
85005	Electrically adjustable heated rear view mirror
85022	Engine cooling electromagnet coupling
85028	Locking device for rear differential
85036	Heated air-suspended seat (driver's side)
85038	Heated air-suspended seat (driver's opposite side)

85130 Immobilizer
85131 Volumetric sensor
85132 Antitheft device self-supplying syren
85150 4-channel methane control unit
85151 EDC injection pump
85152 Accelerator load sensor (EDC)
85156 Turbofan air pressure temperature sensor, (EDC)
85157 Pressure adjustment sensor
86002 Sensors for front brake shoe wear
86003 Sensors for rear brake shoe wear
86011 Electronic control unit, pre/after-heating system
86012 Electronic control unit for signalling water in fuel filter
86013 Sensor, water in fuel filter
86020 Antipollution device control unit (EGR)
86023 Vehicle raising/lowering control unit
86029 Electronic control unit for central door locking
86046 Electronic control unit for trailer lights control
86047 Electronic control unit for switching on total power takeoff
86060 Airbag control unit
86061 Air bag
86062 Pretightener
88000 ABS system electronic control unit
88001 ABS system sensor

POWER NETWORK

GENERAL 3
- ❑ Power network assembly 4
- ❑ Positive network 5
- ❑ Negative network 7
- ❑ Earth points on the vehicle 9

CONCEPT OF EARTH AND ELECTROMAGNETIC COMPATIBILITY 10
- ❑ Practical advice 12
- ❑ Ultrasonic cable welding 13

MAIN COMPONENTS OF THE POWER NETWORK 14
- ❑ BOSCH KCBI 14V 50-90A Alternator 14
- ❑ BOSCH KCBI 14V 70-120A Alternator 15
- ❑ EV 12V - 2.3 kW Starter motor 16
- ❑ Battery 17
- ❑ Ignition switch 18
- ❑ Interconnection center 19
- ❑ General remote control switch (T.G.C.) 20

GENERAL

Never disconnect the battery from the system with the engine running.
When needing to disconnect the battery from the system, always firstly disconnect the earth cable on the engine from the battery negative terminal.
Before connecting the battery to the system, make sure that the system is well insulated.
Disconnect the battery from the system when charging it.

The purpose of the electric system is to generate, regulate, store and distribute the energy needed to make the vehicle components work.

For this reason the supply of the base electric system is ensured by a generator (14V, 50 -90A alternator) and a 12 V, 110 Ah battery.

The battery is located in a special compartment on the left front side of the bonnet.

Earth points

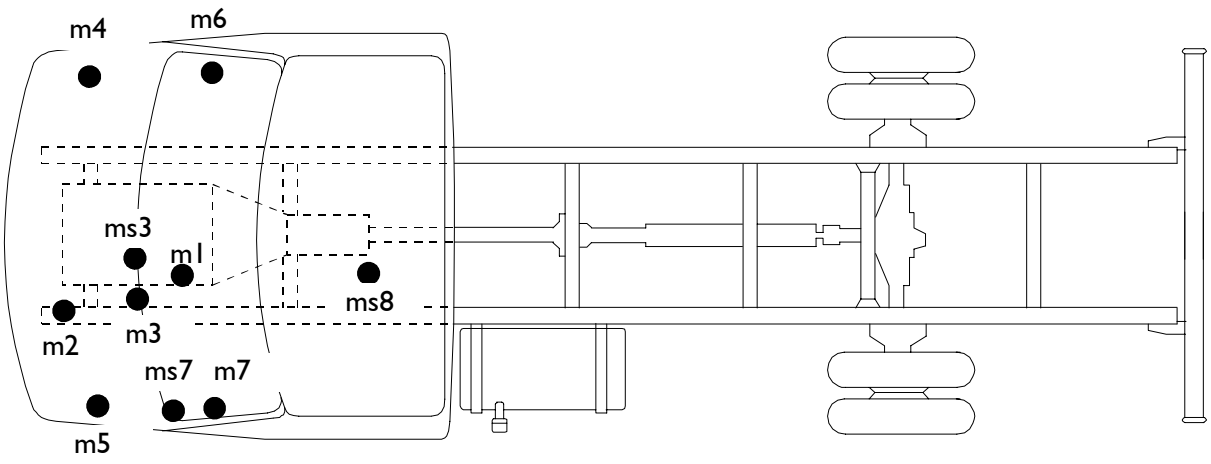

7389

1.1 EARTH POINTS
m1. ENGINE EARTH - **m2.** FRAME EARTH - **m3.** BONNET POWER EARTH - **ms3.** BONNET SIGNAL EARTH - **m4.** BONNET RIGHT SIDE EARTH **m5.** BONNET LEFT SIDE EARTH - **m6. m7.** CAB INSIDE EARTHS - **ms7.** CAB INSIDE SIGNAL EARTH - **ms8.** AIR BAG SIGNAL EARTH

Power network assembly

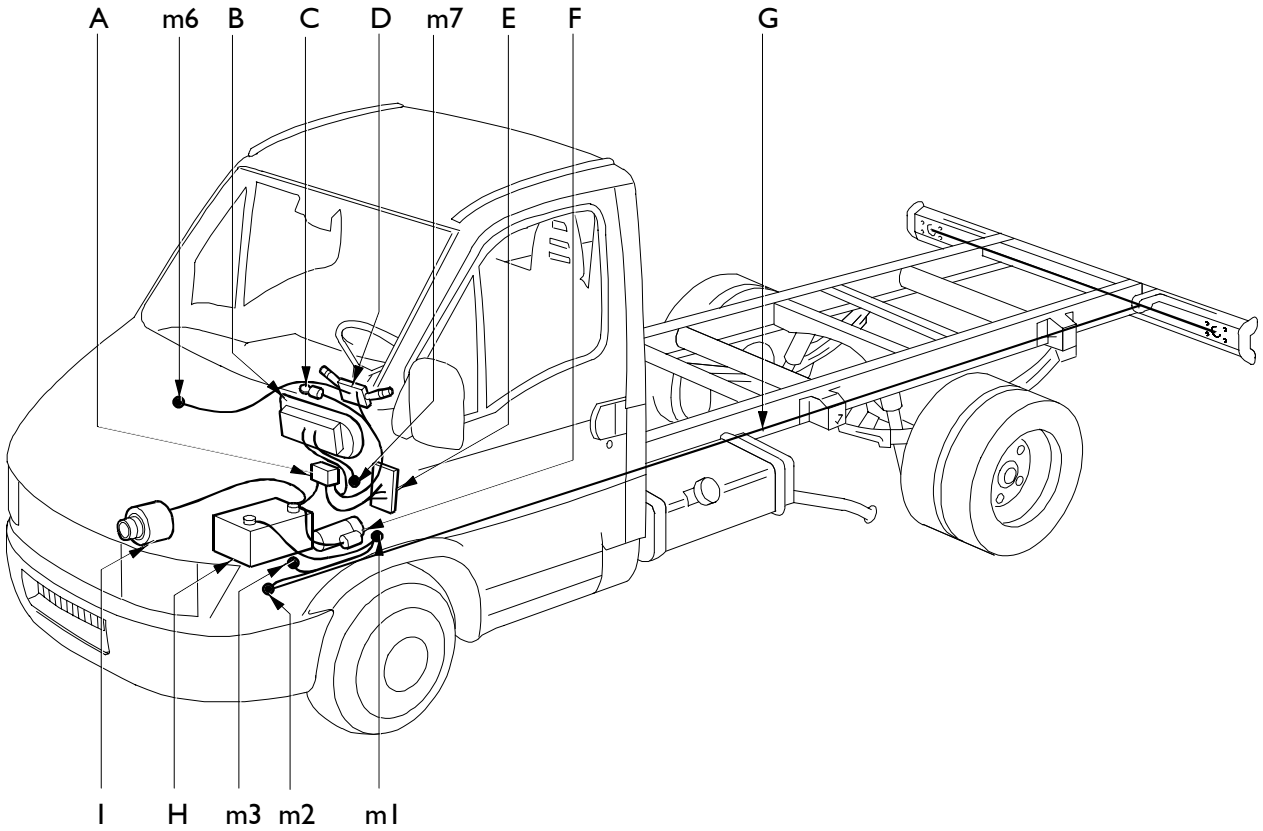

I.2 POWER NETWORK ASSEMBLY
A. CONTROL BOX **- B.** INSTRUMENT CLUSTER WITH WARNING LIGHTS **- C.** IGNITION SWITCH **- D.** STALK UNIT **- E.** RELAY/FUSE HOLDER SUPPORT **- F.** STARTER MOTOR **- G.** EARTH CABLES OF FRAME AND TAIL LIGHTING COMPONENTS **- H.** BATTERY **- I.** ALTERNATOR

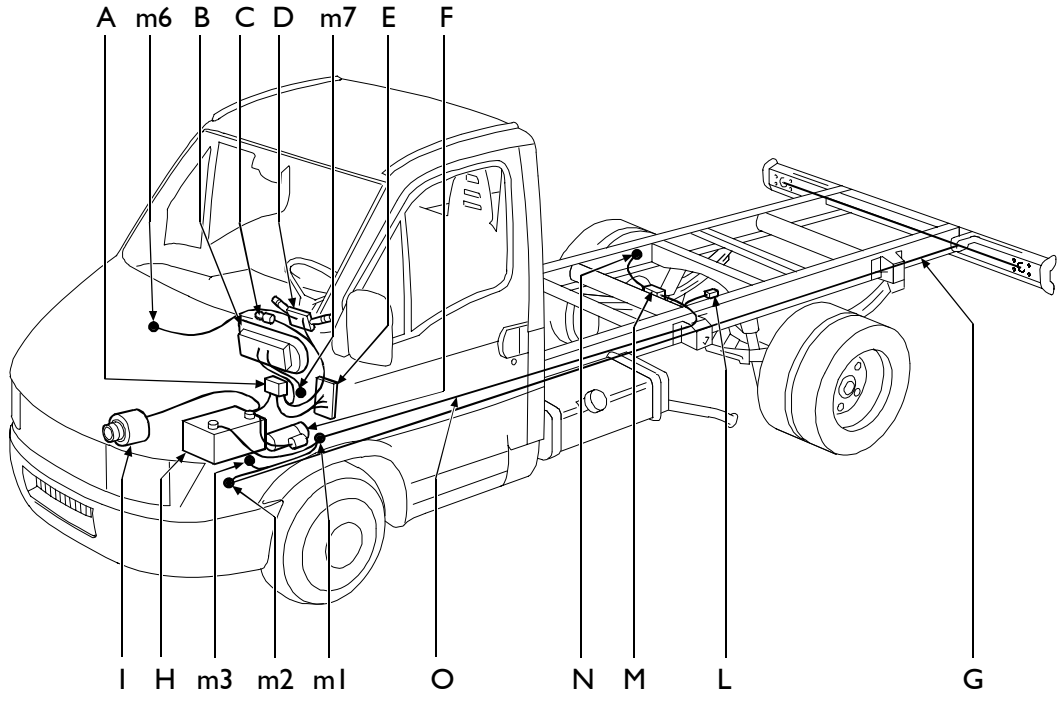

I.3 POWER NETWORK ASSEMBLY WITH TELMA SPEED LIMITER
A. CONTROL BOX **- B.** INSTRUMENT CLUSTER WITH WARNING LIGHTS **- C.** IGNITION SWITCH **- D.** STALK UNIT **- E.** RELAY/FUSE HOLDER SUPPORT **- F.** STARTER MOTOR **- G.** EARTH CABLES OF FRAME AND TAIL LIGHTING COMPONENTS **- H.** BATTERY **- I.** ALTERNATOR **- L.** RELAYS - **M.** ELECTROMAGNETS - **N.** GROUND POINT - **O.** GROUND CABLE FOR TELMA SPEED LIMITER

Positive network

The battery positive terminal (Fig. I.4) is connected through a 50 mm^2 cable to terminal 30 of the starter motor (Fig. I.5). In the PC/NA engine, two 16 mm^2 and one 6 mm^2 cables are also connected to the battery positive terminal cable. The former two are connected to the alternator (Fig. I.6) and to the control box (Fig. I.7), the other cable supplies the glow plug control relay.

In the ID/TCA engine, the above wiring is repeated, with the exception of the 6 mm^2 cable, which now supplies the 40A fuse relating to the before-after warming electronic control unit.

As far as the Unijet engine is concerned, there are only the cables relating to the alternator and control box.

At the terminal of the battery positive cable in vehicles with ABS a 6 mm^2 cable connects the 40A fuse that supplies the ABS electronic control unit.

In vehicles fitted with cab/bonnet cable with provision for the various optional items, also a 4 mm^2 cable is connected to the battery positive terminal cable: it supplies the ignition key (Fig. I.9), 38-pin diagnostic connector (cell 27) and, in the Unijet engine, the instrument cluster with warning lights, through ultrasonic weld.

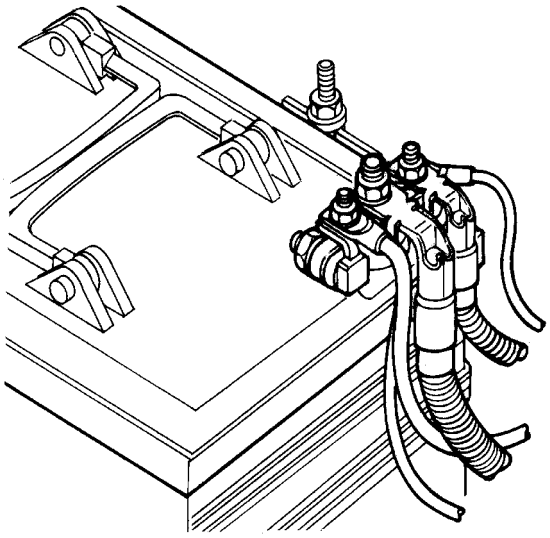

I.4 CONNECTIONS TO BATTERY POSITIVE TERMINAL

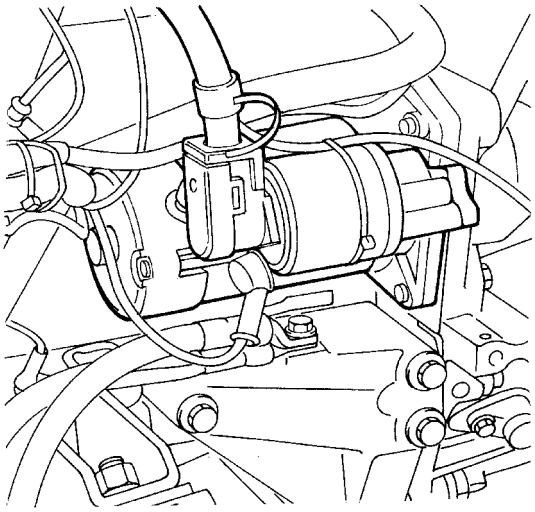

I.5 CONNNECTION OF STARTER MOTOR TERMINAL 30 TO BATTERY POSITIVE TERMINAL

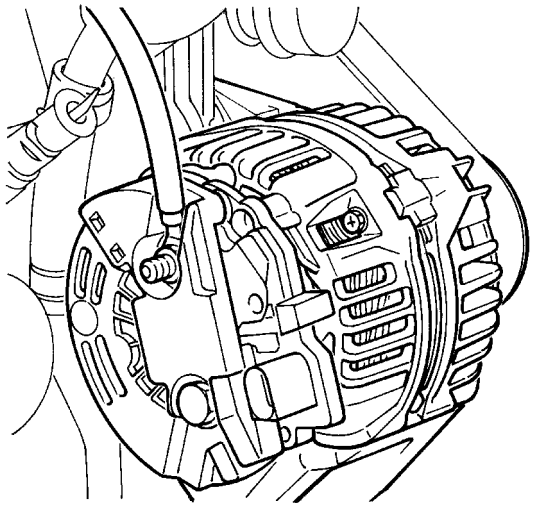

I.6 POSITIVE NETWORK CONECTION TO ALTERNATOR

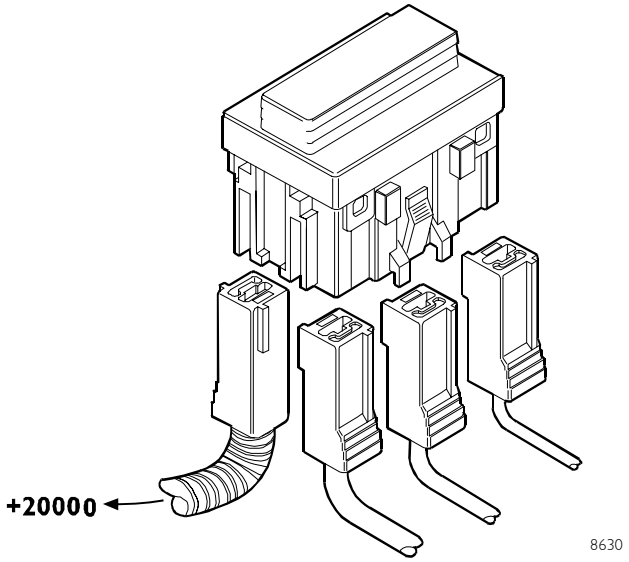

1.7 CONTROL BOX AND ITS CONNECTIONS

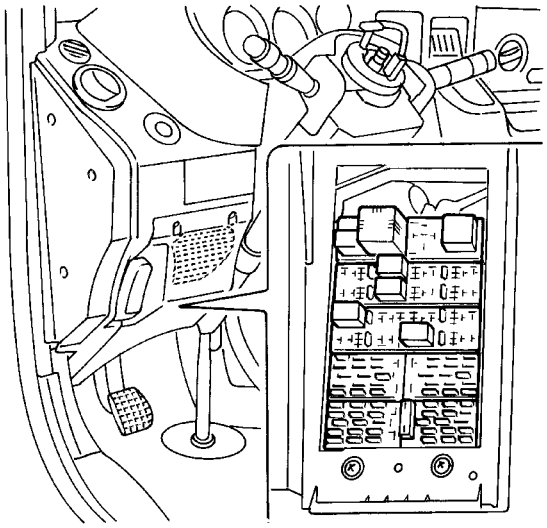

1.8 RELAY/FUSE HOLDER SUPPORT

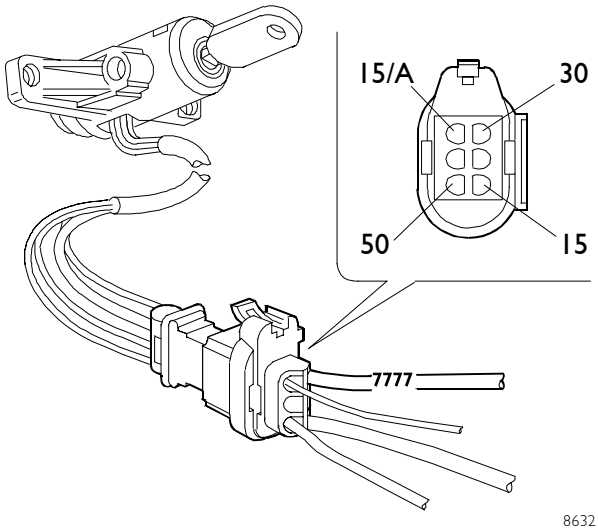

1.9 POSITIVE NETWORK CONNECTION TO IGNITION SWITCH

In the immediate vicinity of the battery, there is the control box (Fig. 1.7): this has the task of providing the battery + supply, through internal bridges to the different electric functions of the vehicle.
A 6 mm^2 cable and a 10 mm^2 cable are connected to it; through ultrasonic welds they supply certain components and part of the fuses and relays located on the support (Fig. 1.8) on the lower left part of the dashboard.

In particular, the components and electric functions supplied by the 6 mm^2 cable are:

- thermal starter
- interior lighting, radio-receiver, cigar lighter
- services cut-off relay during starting
- headlamp washer
- 13-pin current socket
- socket for converter

The 10 mm^2 cable supplies:

- ignition switch (base vehicle)
- stalk unit (exterior lights and hazard warning)
- stop lights
- horns
- EDC switching on relay
- instrument cluster with warning lights
- modus diagnostics enable relay
- heated fuel filter
- climate control system
- door locking

Lastly, a 2.5 mm^2 cable can be connected to the control box which supplies fuse 33 (20A), where applicable, of the relay/fuse holder support relating to the additional heater control unit.

Negative network

The battery negative terminal is connected to with a brown 50 mm^2 cable to the earth point **m1** (Fig. 1.10) to be found on the left-hand side of the crankcase, next to the starter motor. From this point, two copper braids are connected to earth points **m2** (Fig. 1.12) on the front of the left sidemember and **m3** (Fig. 1.11), on the bonnet under the vacuum servobrake. At m3 the wirings concerning the frame and engine are connected. Near m3, there is another earth point, called **ms3** (Fig. 1.11) which, through a 2.5 mm^2 cable performs the signal earth function for the ABS electronic control unit.

In addition, on the Unijet engine a 6 mm^2 cable connects the battery cable terminal to the ultrasonic weld on which the earth cables of the immobilizer electronic control unit, switch for EDC system check function, EDC electronic control unit (pin 12, 24, 43) and of the 38-pin diagnostic connector (cell 24) converge.

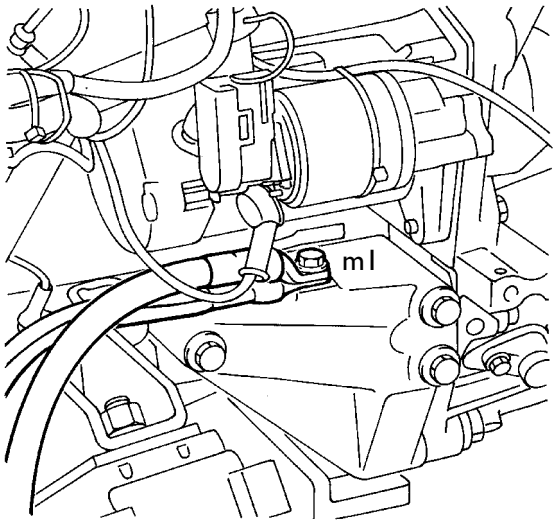

1.10 EARTH POINT ON ENGINE

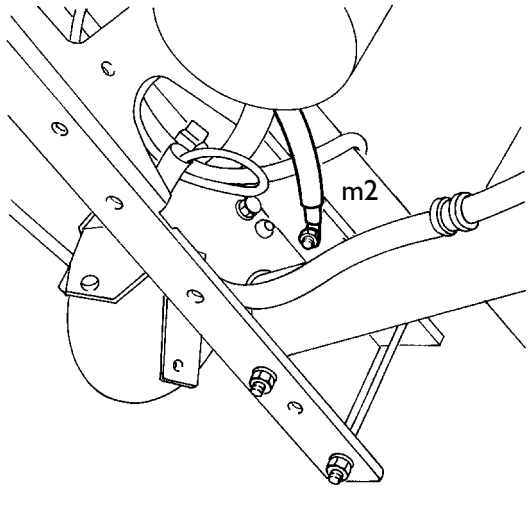

1.12 EARTH POINT ON FRAME

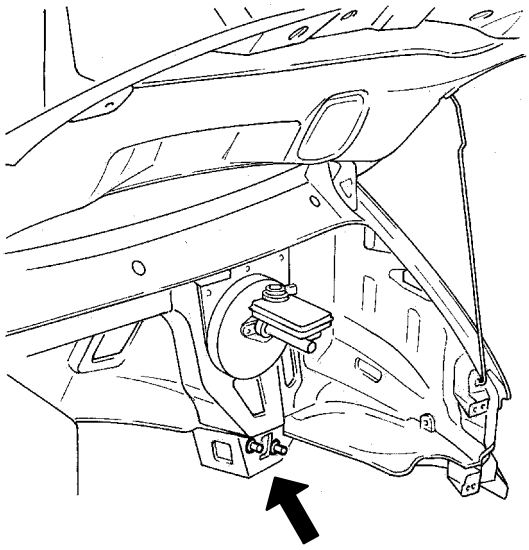

1.11 EARTH POINT ON LOWER BONNET (m3-ms3)

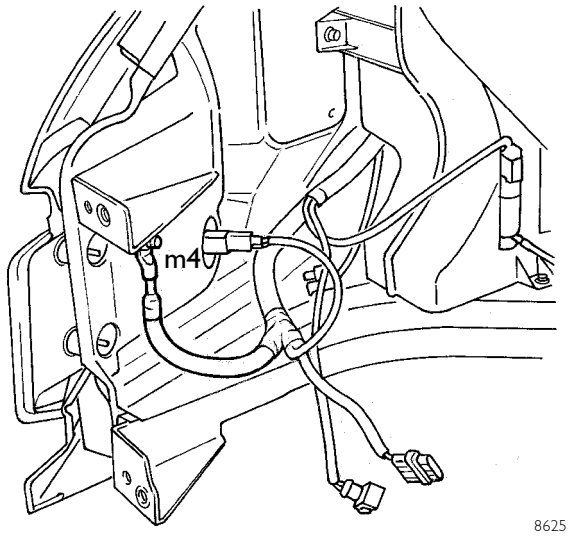

1.13 EARTH POINT ON BONNET RIGHT-HAND SIDE

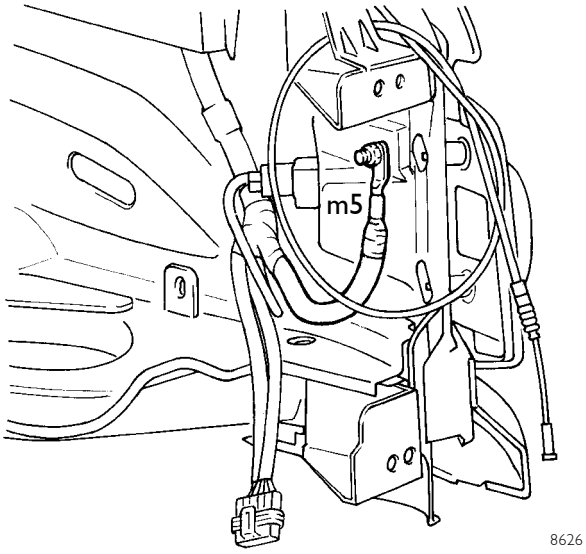

1.14 EARTH POINT ON BONNET LEFT-HAND SIDE

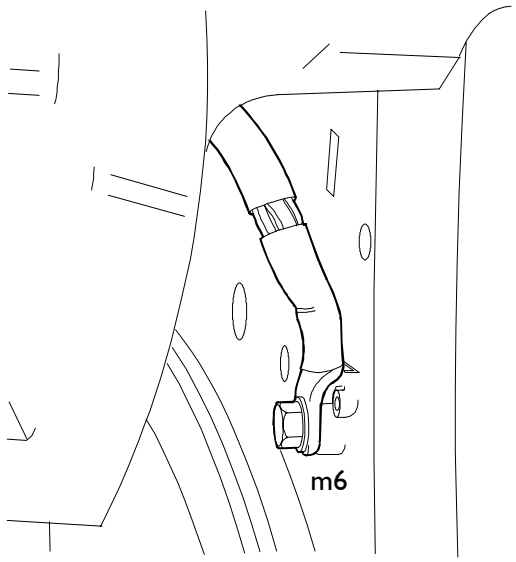

1.15 EARTH POINT ON CAB RIGHT-HAND SIDE

Earth point **m4** (Fig. 1.13), to which the components concerning the front and right side lighting, windscreen wiper, windscreen washer, windscreen washer pump and air cleaner clogged signal switch are connected, is located in the bonnet near the right front direction indicator.

Earth point **m5** (Fig. 1.14), to which the components concerning the left front lighting and the fuel oil heating device are connected, is located near the left front direction indicator.

Earth points **m6** (Fig. 1.15) and **m7** (Fig. 1.16), are respectively located on the right and left of the cab, near the upper hinges of the doors. To these are connected the components in the dashboard (stalk unit, instruments, warning lights, switches), in the doors, where applicable (power window switches, motors for power window/door locking, rear-view mirror aiming) and in the upper part of the cab (roof lamp, front clearance lights).

Next to earth point m7 we find the signal earth **ms7** (Fig. 1.16); a 1.5 mm^2 cable leads from here connected to an ultrasonic weld to which the signal earth cables of the electronic components of the cab/bonnet cable converge such as the stalk unit, instrument cluster with warning lights, 38-pin diagnostic connector (cell 30).

Lastly on the floor panel, next to the handbrake lever, there is an earth point (**ms8**) specific for the air bag electronic control unit.

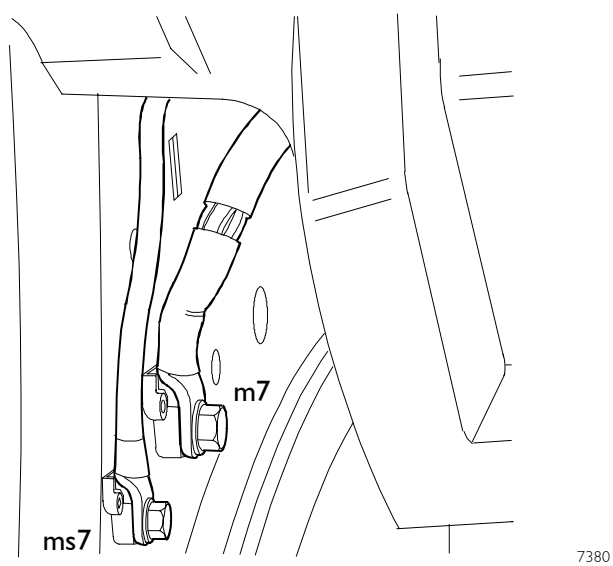

1.16 EARTH POINT ON CAB LEFT-HAND SIDE

Earth points on the vehicle

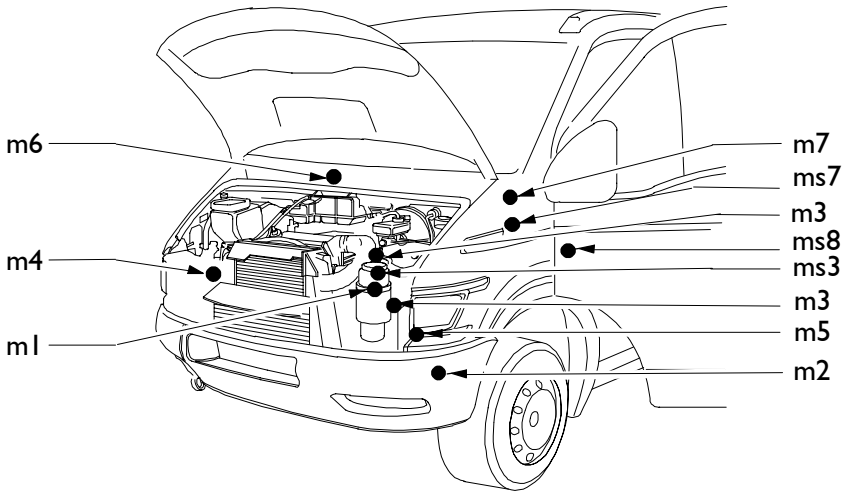

7390

Earth connection	Location	Components concerned
m1 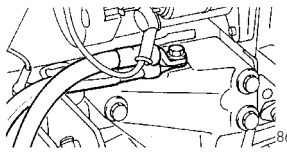 8634	Left crankcase	Battery negative terminal-connection to earth points m2 and m3
m2 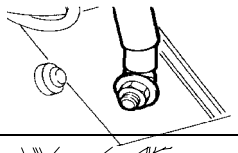 8635	Front part of left sidemember	Connection to earth point m1
m3 ms3 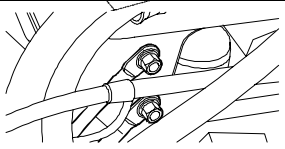 8636	Lower bonnet (under vacuum power steering)	Connection to earth point m1 - components on frame and engine - electronic ABS control unit
m4 m5 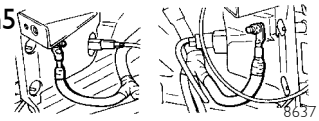 8637	Bonnet (near right and left side direction indicator)	Fuel oil heating resistance - air cleaner clogged signal switch - front and side lights - windscreen washer pump
m6 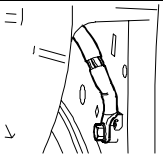 7395	Cab inner right side	Stalk unit - windscreen electric demister control unit - cigar lighter- ashtray light - hazard warning light switch - radio-receiver unit
m7  7396	Cab inner left side	Instrument cluster with warning lights - front clearance lights - headlamp aiming control - relays on relay/fuse holder support - interior lighting
ms7 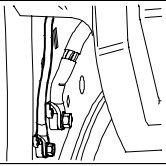 7397	Cab inner left side	Instrument cluster with warning lights - stalk unit - low engine coolant fluid level indicator control - transmitter for electronic tachograph
ms8 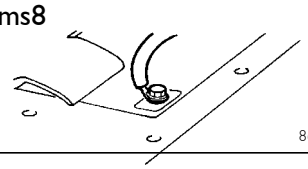 8638	Centre floor	Air bag electronic control unit

CONCEPT OF EARTH AND ELECTROMAGNETIC COMPATIBILITY

The electric system is traditionally a single-pole system. The body, the frame, the metal container of electromechanical components act as equipotential return conductor to the generator, as any point of their metal structure or any negative terminal not isolated is at the same reference potential or EARTH. This is why the earth has been chosen as reference to the whole system, conventionally giving it the value of zero.

Due to obvious reasons of construction, in the negative network of the system there are various earth points located on the vehicle in relation to the location of the components on the frame, engine and body.

On the other hand, ideally, all the equipment should be connected to **only** one earth point in order to provide them, particularly for electronic devices, a clearly defined earth reference.

For the above-mentioned reasons it is necessary to distinguish the **supply earth** or system earth, characterised by strong direct current intensity (> 1 A for electromechanical components), from the **analogue earth**, characterised by wave shapes at determinate frequencies and very low current intensity (mA, μA) of electronic systems.

The definition of signal earth or analogue earth depends on the sensitivity of the electronic systems to EMC (electromagnetic compatibility), as parasite signals emitted by the systems on board or outside the vehicle, induce failures and/or deterioration of the systems themselves. The best solution for a signal earth is connection with the battery negative terminal.

In order to minimise both continuous and transient disturbance or interference generated by parasite radiation, **it is of the utmost importance** to always bear in mind that the satisfactory efficiency of the reference plane or system earth depends on the excellent conductivity characteristics (contact resistance tending towards zero) in each of its connection points.

Briefly, we can say that the earth understood as equipotential electrical conductor, i.e. as potential reference for all the electric/electronic components on board, is subdivided into system earth and analogue earth.

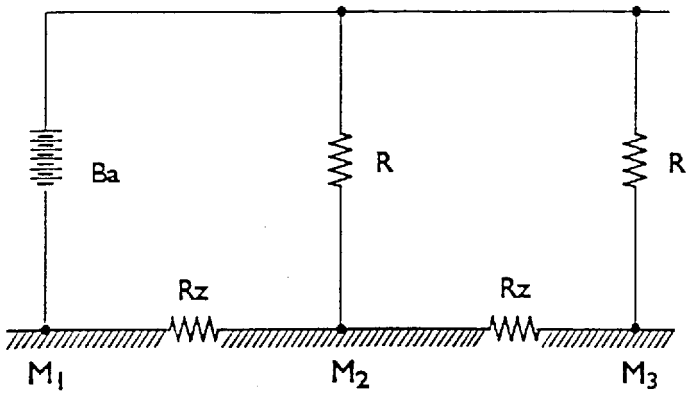

1.17 IDEAL EQUIPOTENTIAL EARTH NETWORK
Ba. BATTERY - **R.** LOADS - **Rz.** FRAME IMPEDANCE - **M_1, M_2, M_3.** EARTH

The system earth points are those foreseen by the Manufacturer and must, of course, be free of paint, oxidation, grease, dust, etc.

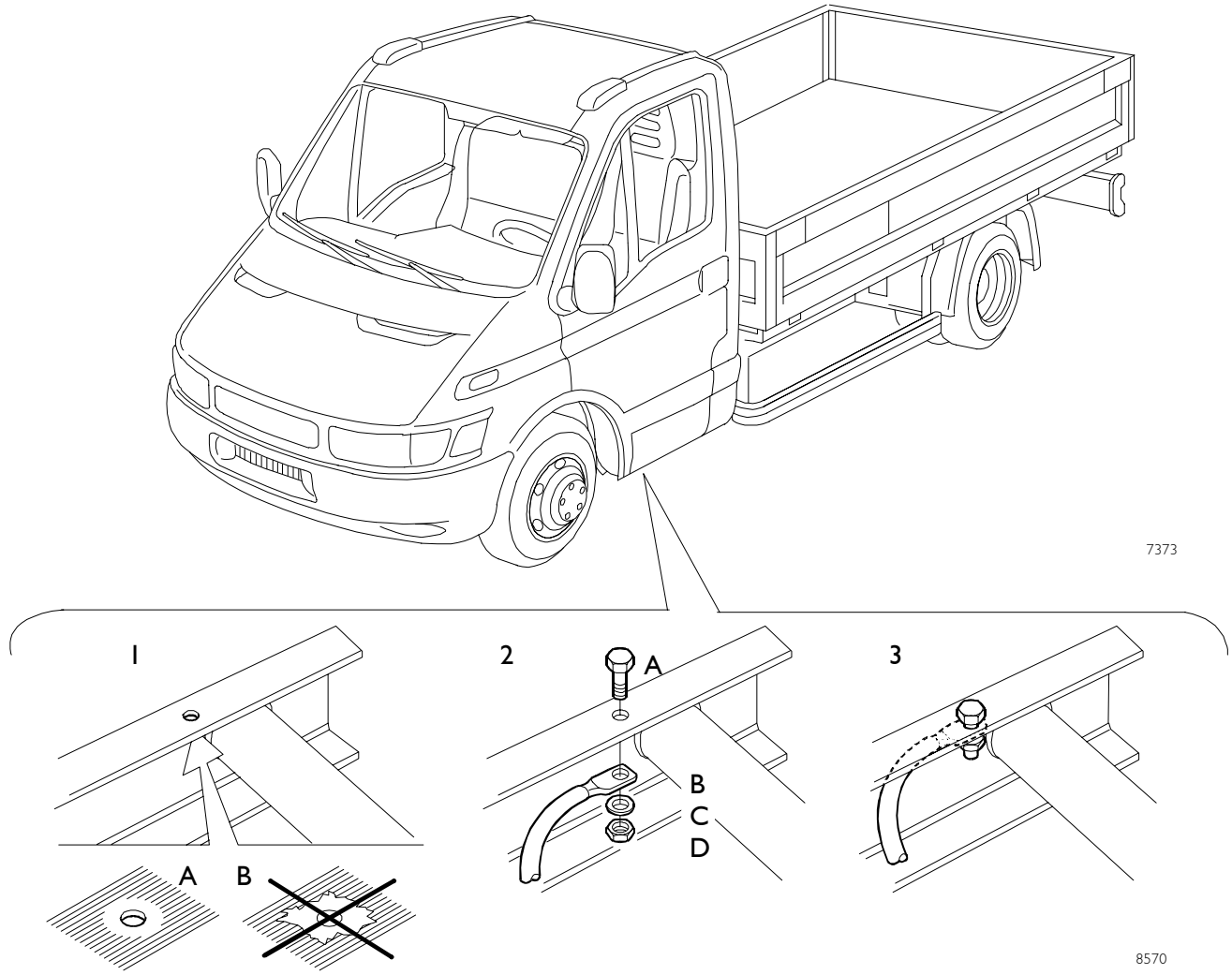

I.18 **1** - EARTH CONNECTIONS: **A.** EFFICIENT EARTH POINT - **B.** INEFFICIENT EARTH POINT
2 - FASTENING SEQUENCE: **A.** SCREW - **B.** TERMINAL - **C.** WASHER - **D**. NUT
3 - CABLE CONNECTED TO EARTH

Should it be necessary to disconnect the earth cables from the frame, when restoring the connection it is necessary to completely remove the old conduction paint and coat with an even layer of paint BH44D which meets IVECO Standard 18-1705, proceeding as follows:

1st Remove the paint on both the frame and terminal side mechanically or using a suitable chemical product.

2ndBrush on the paint, if in can, or spray.

3rd Connect the earth cables within a maximum of 5 minutes from painting.

4th If a new earth contact is fitted, file around the terminal fastening hole to completely remove the anaphoretic paint of the frame creating a perfectly flat resting surface with no crinkles or steps.

Practical advice

The negative cables connected to an earth point must be as short as possible and connected to one another in a "star" connection, trying to tighten them neatly and adequately (Fig. I.19 ref. M).

Additionally, for electronic components the following instructions should absolutely be followed:

- Electronic control units must be connected to the system earth when they have a metal container.
- The negative cables of electronic control units must be connected to both a system earth point, for example the dashboard earth (avoiding "serial" or "chain" connections), and to the negative terminal of the battery/ies.
- Though they are not connected to the system earth/battery negative terminal, analogue earths (sensors) must be perfectly insulated. Therefore, particular care should be given to the parasite resistances of the terminals: oxidation, clinching defects, etc.
- The metal braiding of screened circuits must be in electrical contact in each of its ends with the components of the system.
- Only one end of the screening braid must be connected to the system earth.
- In the presence of jointing connectors the unscreened section **d**, near them, should be as short as possible (Fig. I.20).
- The cables should be laid on parallel with the reference plane, i.e. as near as possible to the frame/body structure.
- Additional electromechanical systems should be carefully connected to the system earth and must not be set at the side of the cables of electronic components.

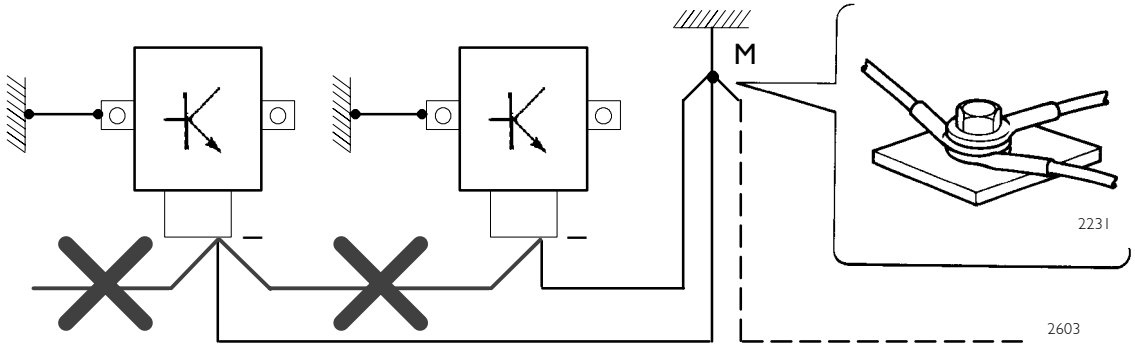

I.19 "STAR" CONNECTION OF NEGATIVE CABLES TO THE SYSTEM EARTH **M**

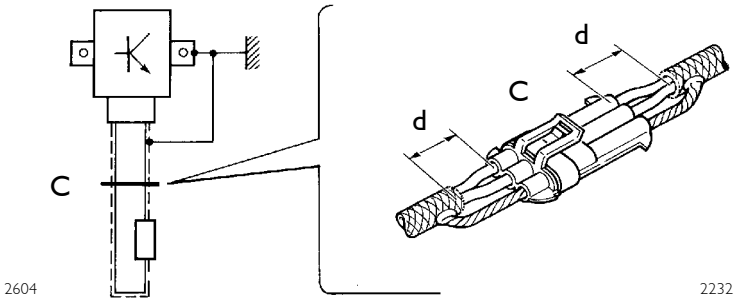

I.20 SCREENING BY METAL BRAID OF A CABLE TO AN ELECTRONIC COMPONENT - **C.** CONNECTOR - **d.** DISTANCE → 0

Ultrasonic cable welding

In order to eliminate earth, supply, outer/inner lighting bridges between components, ultrasonic welding points have been used.

These are not easily identifiable as they appear along the cables inside the corrugated tube of the various harnesses and they are isolated from the cables through heat-shrinking sheaths or insulating plastic.

Generally, the cables of the components converge on one side in the different welding points, while on the other only one cable connects them with the earth or supply.

It is also possible to have several welding points connected to one another in which several cables converge on both sides of the welding. In this case, the earth or supply cable will be connected to the last weld of the series.

Ultrasonic welding brings considerable advantages, including:

– reduction of electromagnetic interference outside the vehicle

– the almost total reliability of the electric system, due to elimination of the bridges, with lower possibility of faults.

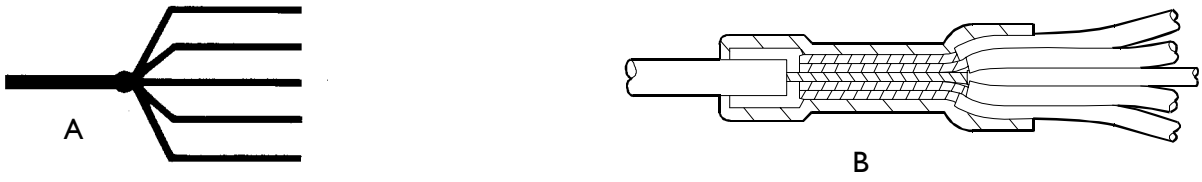

4886 8576

I.21 ULTRASONIC WELDING
A.WIRING DIAGRAM **- B.** TECHNICAL LAYOUT

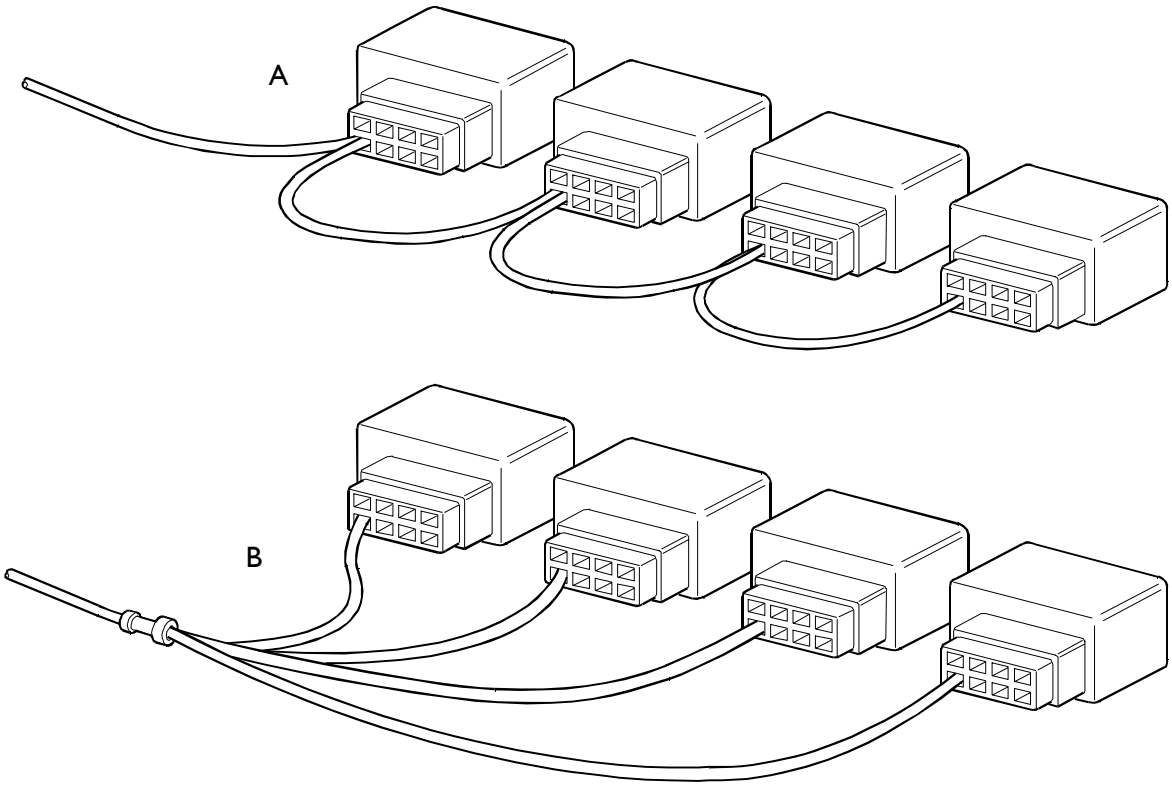

8577

I.22 CONNECTION BETWEEN COMPONENTS
A.CONNECTION THROUGH BRIDGES - **B.** CONNECTION THROUGH ULTRASONIC WELDING POINT

MAIN COMPONENTS OF THE POWER NETWORK

BOSCH KCBI 14V 50-90A Alternator

03000

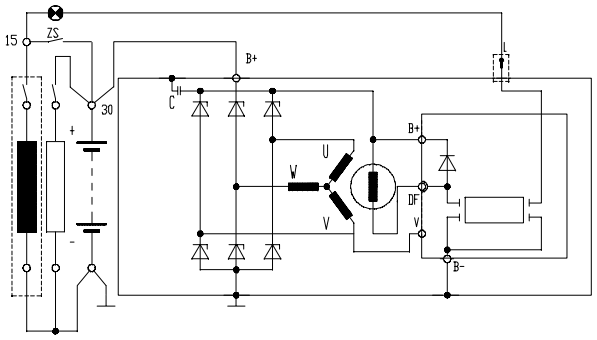

WIRING DIAGRAM 8649

Specifications for use

Vehicle electric system rated voltage: 12 V

Suitable for coupling with battery of any capacity

It must work with the battery connected (for brief periods ≤ 15 min. operation is permissible with the battery disconnected provided that electric loads ≥ 10A are connected to terminal "B+").

Connection with inverted polarity is not allowed.

Operating specifications

Rated voltage	14 V
Rated current delivery	90A
Drive side direction of rotation	clockwise
Maximum continuous speed	≤ 12.000 min^{-1}
Storage temperature	-40 °C / +110 °C

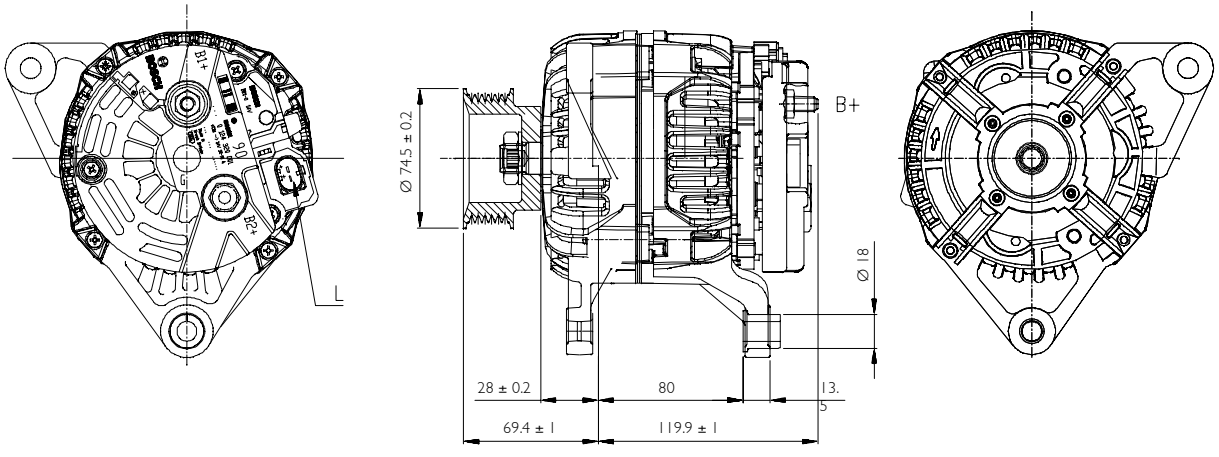

8656

TECHNICAL VIEW

BOSCH KCBI 14V 70-120A Alternator

03000

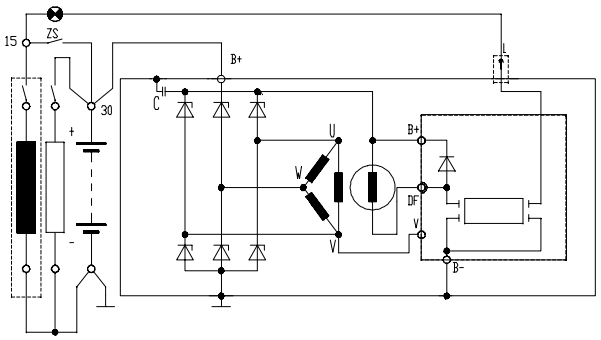

WIRING DIAGRAM 8650

Specifications for use

Vehicle electric system rated voltage 12 V
Suitable for coupling with battery of any capacity

Operating specifications

Rated voltage:	14 V
Rated current delivered:	120 A
Drive side direction of rotation:	clockwise
Maximum continuous speed	≤ 12000 min^{-1}
Storage temperature:	–40 °C / +110 °C

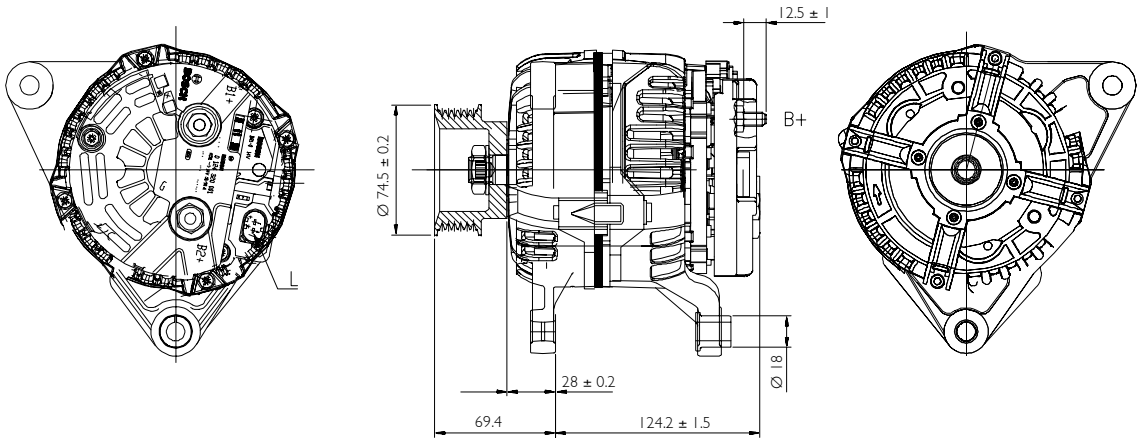

8639

TECHNICAL VIEW

EV 12V - 2.3 kW Starter motor

08000

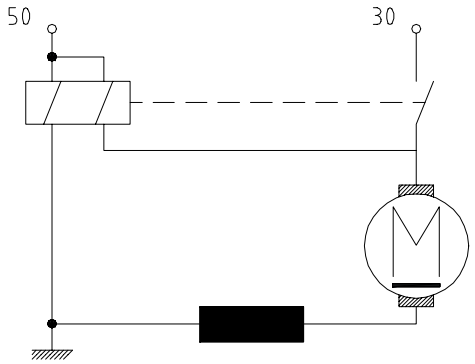

74023

WIRING DIAGRAM

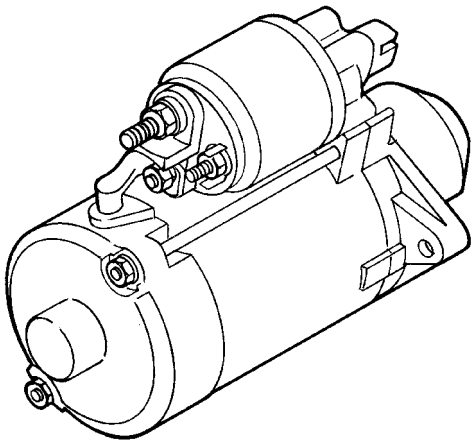

8642

PERSPECTIVE VIEW

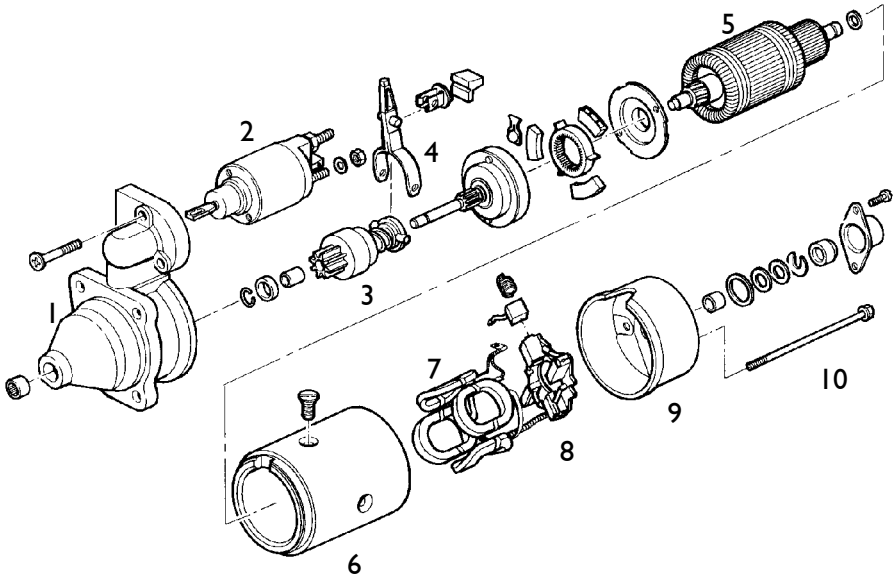

5260

PERSPECTIVE BLOWN-UP VIEW

1. SUPPORT
2. PINION ENGAGEMENT CONTROL ELECTROMAGNET
3. PINION
4. PINION ENGAMENT FORK
5. ROTOR
6. FRAME
7. INDUCTORS
8. BRUSH HOLDER SUPPORT
9. COVER
10. SCREW

Fast diagnosis

Defect	Possible causes	Remedy
Low drawing torque	1. Low battery	Recover
	2. Oxidized or loose circuit connections	Check starter motor and battery connections
	3. Faulty brushes	Check brush slide length and pressure
	4. Field coils short circuited	Replace coils
	5. Rotor cut out or short circuited	Replace rotor
	6. Oval collector	Grind correct or replace
Low drawing torque but engine does not start	1. Defective free wheel or electromagnet	Replace
Pinion disconnected	1. Worn toothed crown	Recover

Battery

The battery shown below has a 12Vdc 110Ah 469 A power supply voltage and is installed on the left side of the engine compartment near the EDC control unit (Ref. A of figure).

Requirements

- Case and cover in polypropylethylene plastics PR. 50.100. Matt white case.
- C.S. plugs, blacK. Grids: positive and negative made of Pb Ca.
- Cover integral polypropylene
- Separator: envelope-type polyethylene
- Battery for "tropical duty" marked with red color.
- "Environmental precautions" plate according to Law no. 126 of 10/04/91 "Standards for user information".
- Adhesive label with "Selective disposal" acc. to EEC Directive no. 93/86.

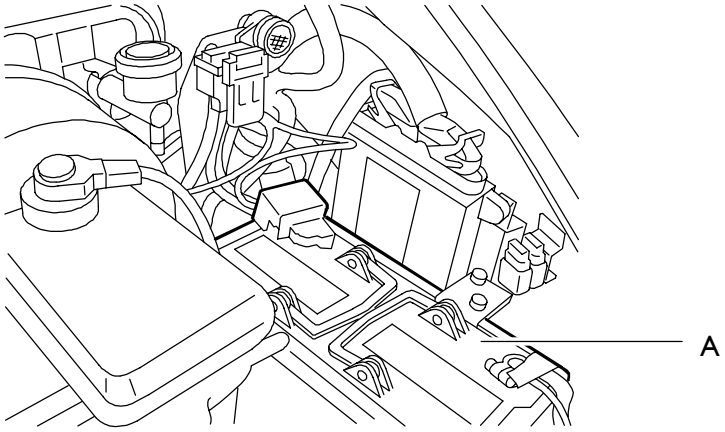

73721

Fast diagnosis

Defect	Possible causes	Remedy
Start defect	1. Low battery	Check battery charge; if regular check recharge circuit
	2. Loose, oxidized or burnt out contacts	Recover
	3. Starter circuit defective	Cf. start section
Low voltage at component leads	1. Battery at half power	Check battery charge; if regular check recharge circuit
	2. Oxidized connections	Sand and replace
Electrolyte level often low	1. Over voltage	Check recharge circuit and/or connection tightness

Ignition switch

52502

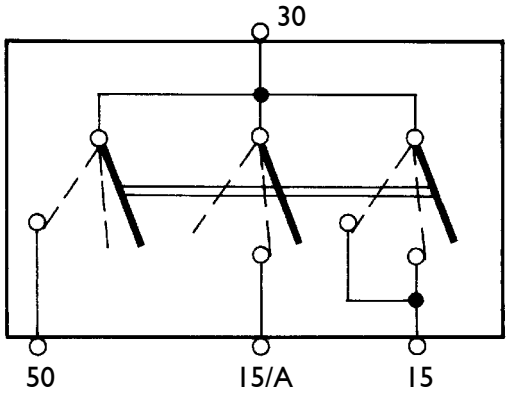

1171

WIRING DIAGRAM

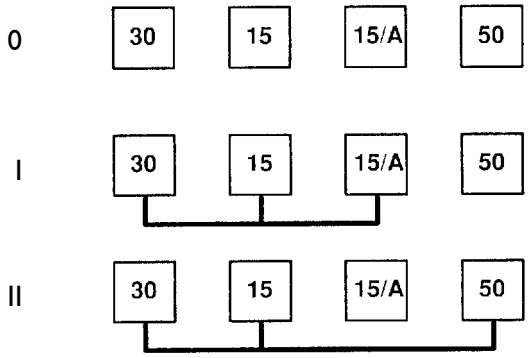

1125

SWITCHING SEQUENCE
0. STOP - **I.** DRIVE - **II.** STARTING

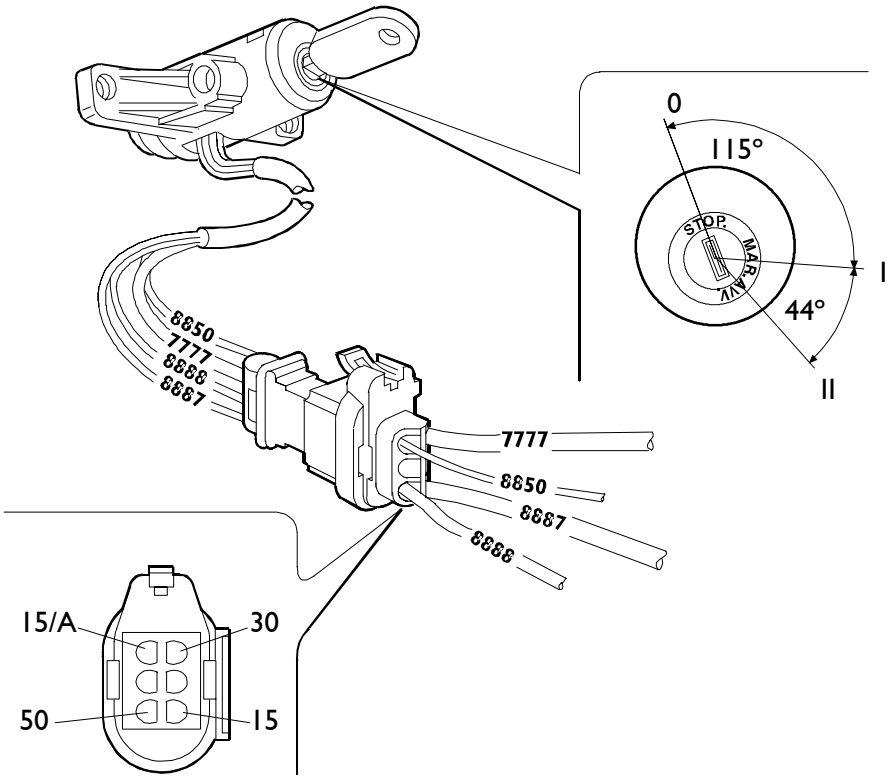

8654

PERSPECTIVE VIEW WITH ASSOCIATED CONNECTIONS AND KEY ROTATION TECHNICAL LAYOUT

Position	Under current	Live circuit	Terminal	Function	Cable colour code
0	30	-	30	Supply	7777
I	30 -15	Services	15	Services	8887
	30 - 15/A	Users	15/A	User cut-off relay during starting	8850
II	30 - 15	Services			
	30 - 50	Starting	50	Starting	8888

Interconnection center

This is a shunt center distributing battery positive power via internal jumpers.

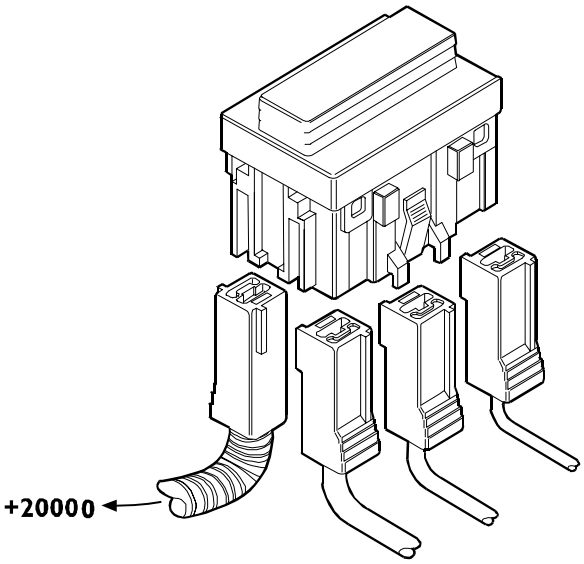

8630 7416

PERSPECTIVE VIEW OF THE JUNCTION BOX AND ASSOCIATED CONNECTORS AND THEIR SURFACE WITH CONTACT BLADES

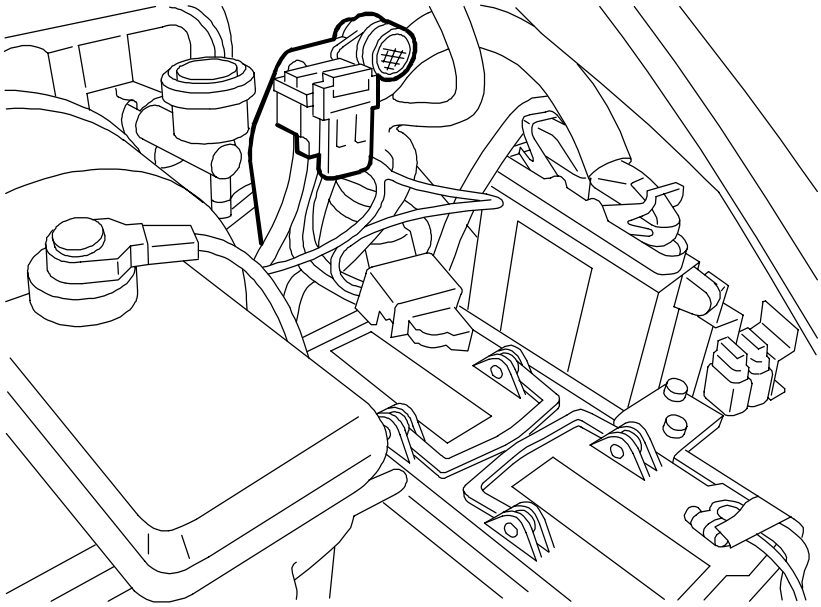

73722

VIEW OF THE ENGINE COMPARTMENT LOCATION

General remote control switch (T.G.C.)

The general remote control switch is installed in vertical position to the vehicle chassis near the battery using special mounting brackets. The remote control switch closing is controlled by switch 53008 and the associated relay to energize TGC from inside cab 25226.

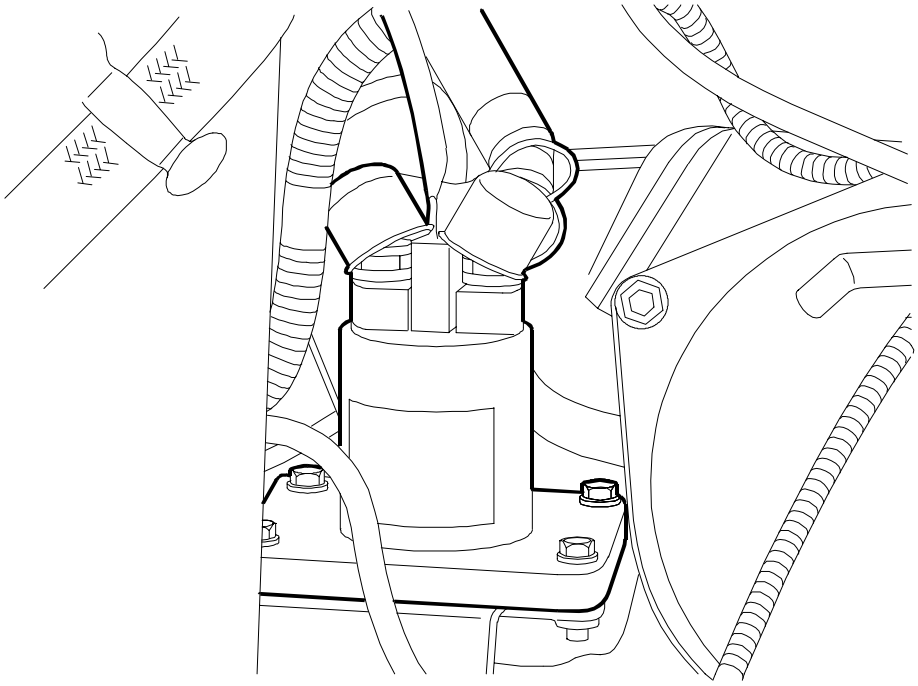

73717

GENERAL REMOTE CONTROL SWITCH

ONBOARD CABLES

Page

INJECTION SYSTEM (ENGINE 8140) 3
- ❑ Components of the injection system 3
- ❑ Engine cable 3

8140.63 PC/NA (.9) ENGINE HARNESS 4

8140.43C ID/TCA (.11) ENGINE HARNESS 6

8140.43S UNIJET (.13) ENGINE HARNESS 8

INJECTION CABLE - V.G.T (.15) 10

F1A UNIJET (.10 - .12) ENGINE HARNESS 12

INJECTION CABLE - F1A (.10 - .12) WITH AND WITHOUT EGR 14

TRUCK CHASSIS CABLE 16

A.B.S. PARALLEL CABLE 18

AIR-BAG CABLE WITH ONE-CONNECTOR CONTROL UNIT 20

AIR-BAG CABLE WITH TWO-CONNECTOR CONTROL UNIT 22

VAN INTERIOR DOME LAMP CABLES 1/2 24

VAN INTERIOR DOME LAMP CABLES 2/2 26

TRUCK INTERIOR DOME LAMP CABLES 28

CONNECTORS BETWEEN CABLES 30
- ❑ Connection between cab/bonnet cable and injection cable (Unijet) 30
- ❑ Connection between cab/bonnet cable and air bag cable 31
- ❑ Connection between cab/bonnet cable and rear differential lock cable 32
- ❑ Connection between cab/bonnet cable and cable for tachometer 33
- ❑ Connection between frame cable and right tail lamp cable 34
- ❑ Connection between frame cable and right tail lamp cable 35
- ❑ Connection between frame cable and left tail lamp cable 36
- ❑ Connection between frame cable and left tail lamp cable 37
- ❑ Connection between cab/bonnet cable and engine cable (engine PC/NA) .9 38
- ❑ Connection between cab/bonnet cable and engine cable (engine ID/TCA) .11 39
- ❑ Connection between cab/bonnet cable and engine cable (Unijet engine) .13 - F1A 40
- ❑ Connection between cab/bonnet cable and roof lamp cable inside cab 41

Page

- ❑ Connection between cab/bonnet cable and frame cable (engines PC/NA and ID/TCA) 42
- ❑ Connection between cab/bonnet cable and frame cable (Unijet engine) 43
- ❑ Connection between cab/bonnet cable and 13 pin current socket cable or rear door opening/closing cable (van) 44
- ❑ Connection between cab/bonnet cable and brake wear/air cleaner clogged cable 45
- ❑ Connection between cab/bonnet cable and self-levelling suspension cable 46
- ❑ Connection between cab/bonnet cable and self-levelling suspension cable 47
- ❑ Connection between cab/bonnet cable and total power takeoff cable 48
- ❑ Connection between cab/bonnet cable and total power takeoff cable 49
- ❑ Connection between cab/bonnet cable and antitheft cable 50
- ❑ Connection between cab/bonnet cable and antitheft cable with central door locking 51
- ❑ Connection between cab/bonnet cable and right door cable 52
- ❑ Connection between cab/bonnet cable and left door cable 53
- ❑ Connection between cab roof lamp and left front clearance light cable 54
- ❑ Connection between cab roof lamp and right front clearance light cable 55
- ❑ Connection between cab/bonnet cable and fog lamp cable 56
- ❑ Connection between right tail light cable and rear roof lamp cable 57
- ❑ Connection between frame cable and side clearance lights cable 58
- ❑ Connection between cab/bonnet cable and ABS cable 59
- ❑ Connection between cab/bonnet cable and ABS cable 60
- ❑ Connection between cab/bonnet cable and climate control system cable 61
- ❑ Connection between cab/bonnet cable and climate control system cable 62
- ❑ Connection between cab/bonnet cable and climate control system cable 63

VENDOR-DERIVED BUS VERSION 64

- ❑ General Information 64
- ❑ Perspective view of Vendor-derived Bus version interior lighting harness 65

DIAGNOSTIC CONNECTOR 66

- ❑ Diagnostic connector pin description table 67

INJECTION SYSTEM (ENGINE 8140)

Components of the injection system

1. Injector
2. Injector retainer screw and bracket
3. Injector retainer screw and bracket
4. Rail sound-absorbing protection (pressure accumulator)
5. High pressure pipe
6. Pump backflow pipe
7. High pressure pump
8. Thermal starter supply pipe
9. Fuel outlets unit

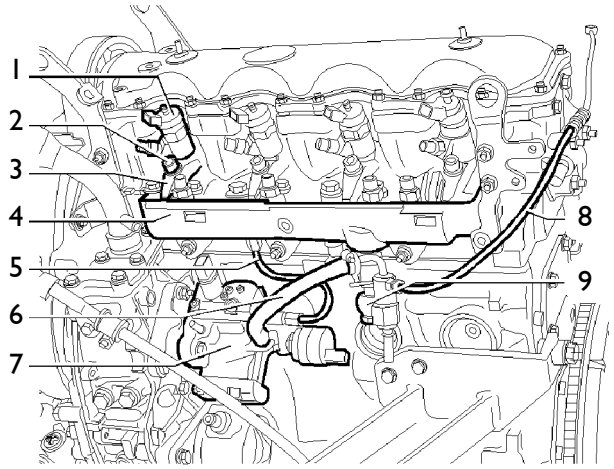

II.1 COMPONENTS OF THE INJECTION SYSTEM

Components of the injection system

1. Thermal starter supply pipei
2. Brackets
3. Brackets
4. Connection pipe with intercooler
5. Thermal starter
6. Piping
7. After warming solenoid valve
8. Intake manifold
9. Boosting air pressure sensor

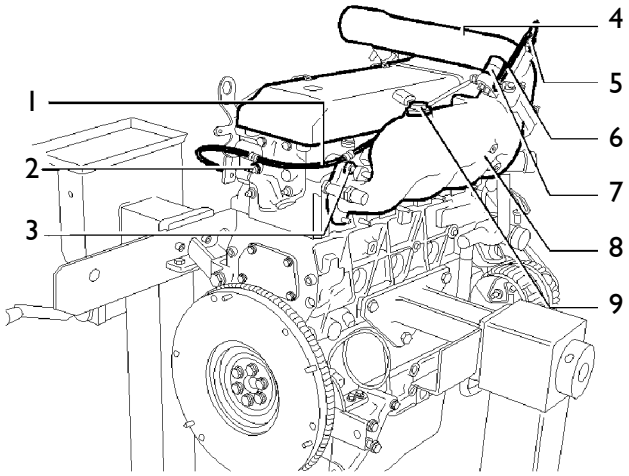

II.2 COMPONENTS OF THE FUEL SUPPLY SYSTEM - INJECTION

Engine cable

All engine cabling is in one bundle assembly.

In case pf need replace the entire bundle assembly and not individual cables or cable sections.

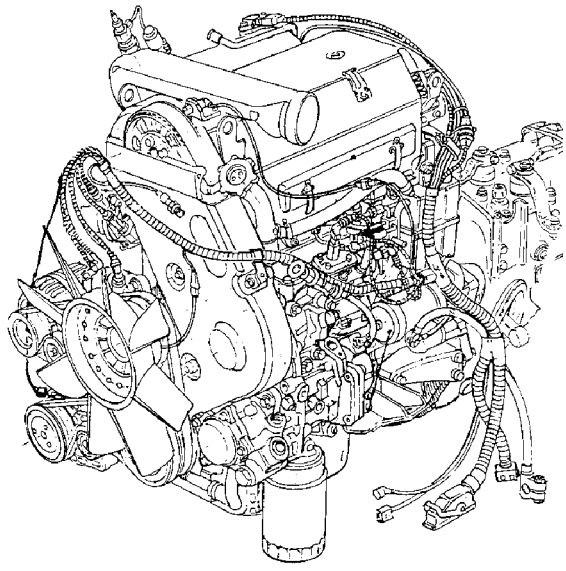

II.3 CABLE ON ENGINE

8140.63 PC/NA (.9) ENGINE HARNESS

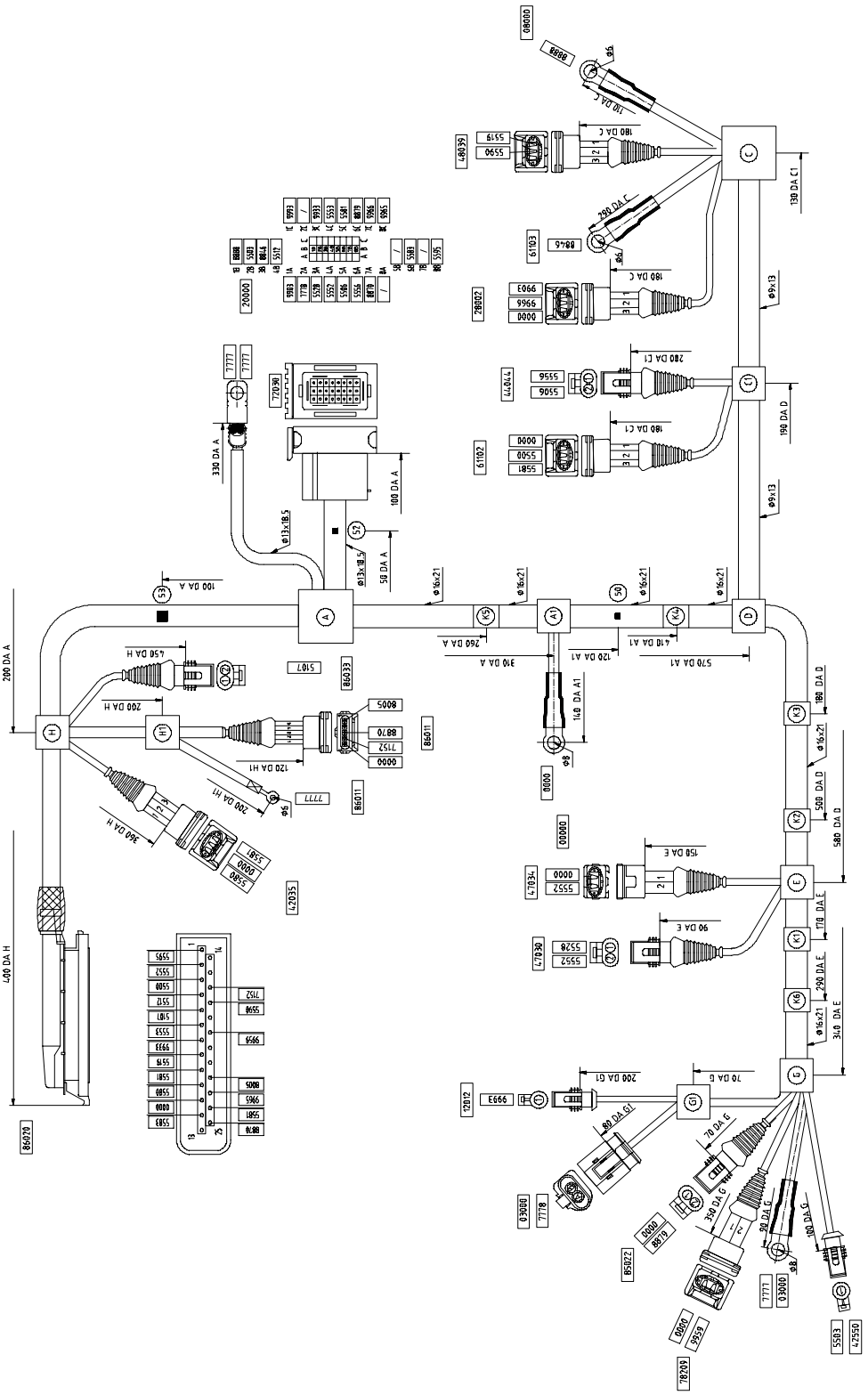

74005

Legend

No protection

Protection with continuous PVC tape

Protection with 30 mm spiral PVC tape

The symbol represents a node

WELDING 8140.63

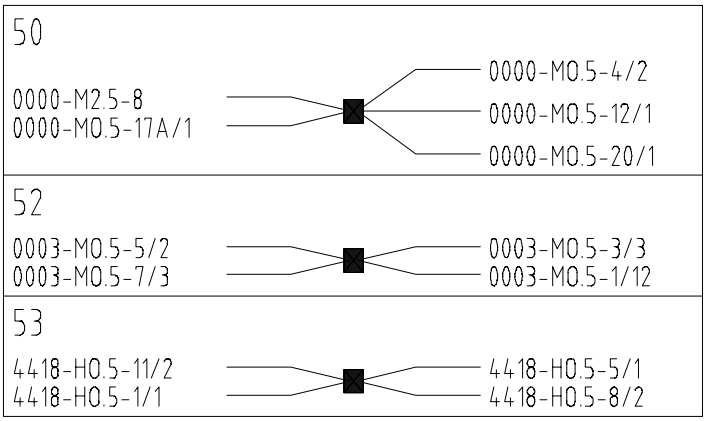

74006

Component code	Description
00000	Ground
03000	Self-rectifying alternator with integrated voltage regulator
08000	Starter motor
12012	A/C compressor
20000	Starter battery
28002	Engine shutdown solenoid
42035	Absolute pressure sensor
42550	Engine oil low pressure indicator switch
44044	Low engine oil level indicator control
47030	Transmitter for engine water temperature thermometer
47034	Engine water temperature sensor for EGR
48039	TDC sensor (vehicles with EGR)
61102	Rheostat for anti-pollution device (EGR)
61103	Variable resistance for spark advance variator (KSB)
72030	Engine service harness connector to cab/hood harness
78209	Solenoid valve for anti-pollution device (EGR)
85022	Electromagnetic coupling for engine cooling
86011	Pre-post-heating electronic control unit
86020	Control unit for antipollution device (EGR)
86033	Electronic control unit for accelerator control

8140.43C ID/TCA (.11) ENGINE HARNESS

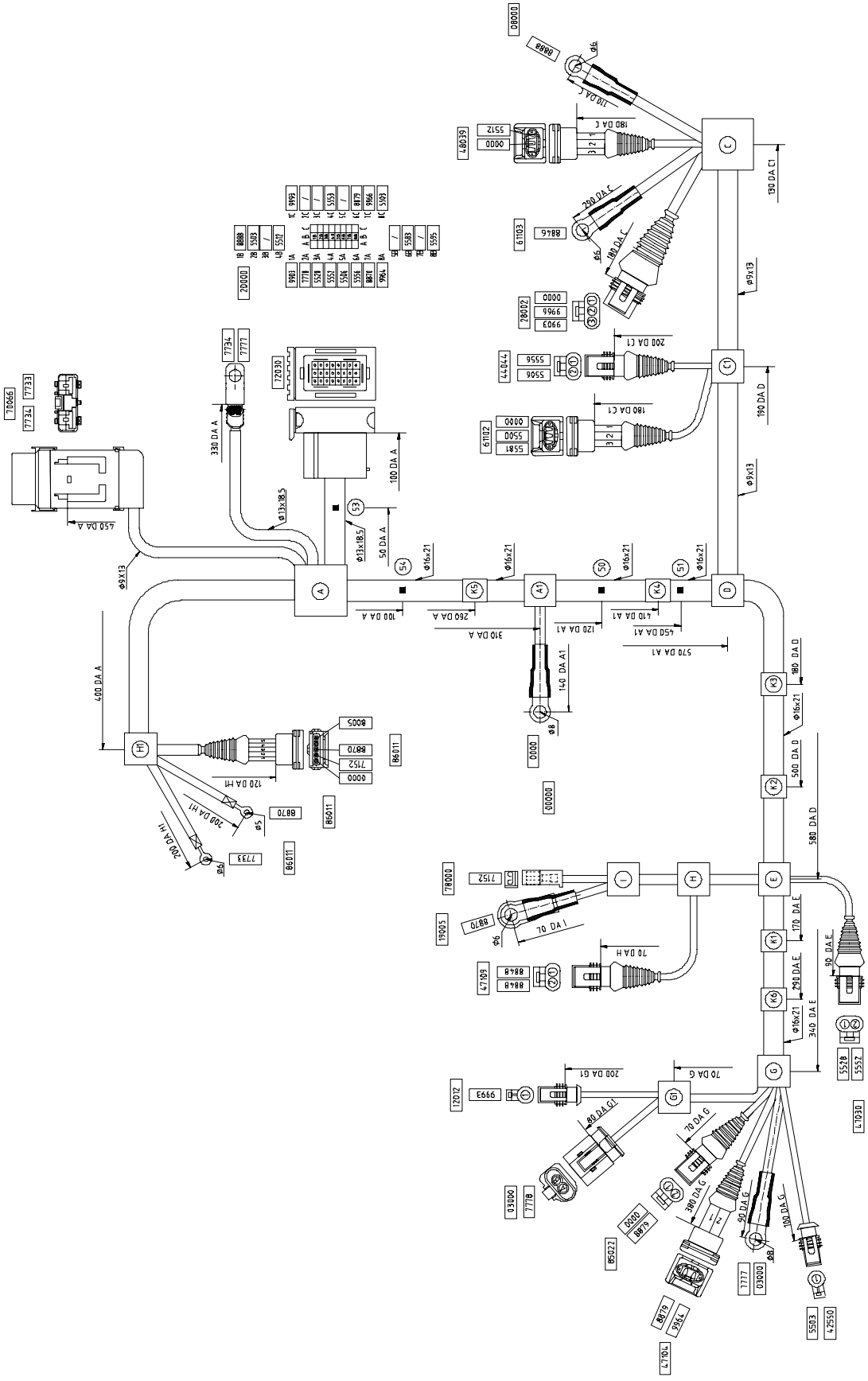

74002

WELDING 8140.43C

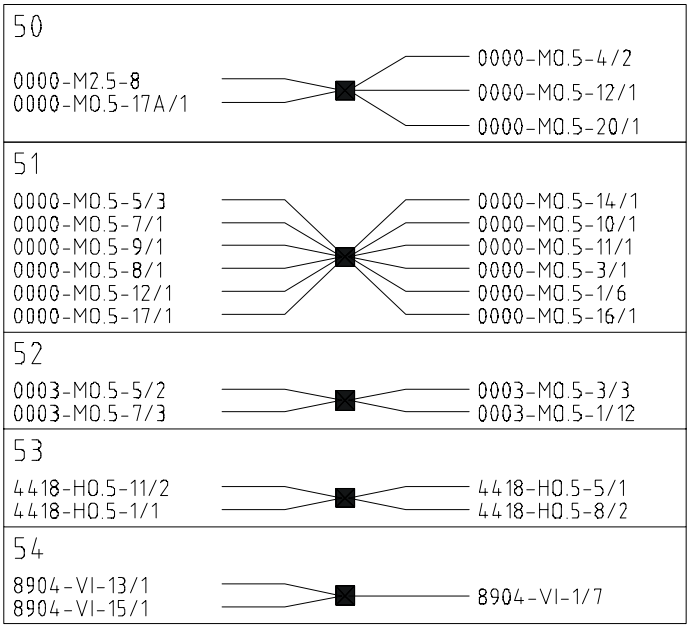

74003

Component code	Description
00000	Ground
03000	Self-rectifying alternator with incorporated voltage regulator
08000	Starter motor
12012	A/C compressor
19005	Thermostarter
20000	Starter battery
28002	Engine shutdown solenoid
42550	Engine oil low pressure indicator switch
44044	Low engine oil level indicator control
47030	Transmitter for engine water temperature thermometer
47104	Engine cooling electromagnetic coupling
47105	Diesel oil heating switch
47109	Spark advance variator switch (KSB)
48035	RPM sensor
61103	Variable resistance for spark advance variator (KSB)
70066	40A one-way fuse holder
72030	Engine service harness connector to cab/hood harness
78000	Solenoid valve for fuel tank connection to atmosphere
85022	Electromagnetic coupling for engine cooling
86011	Pre-post-heating electronic control unit

8140.43S UNIJET (.13) ENGINE HARNESS

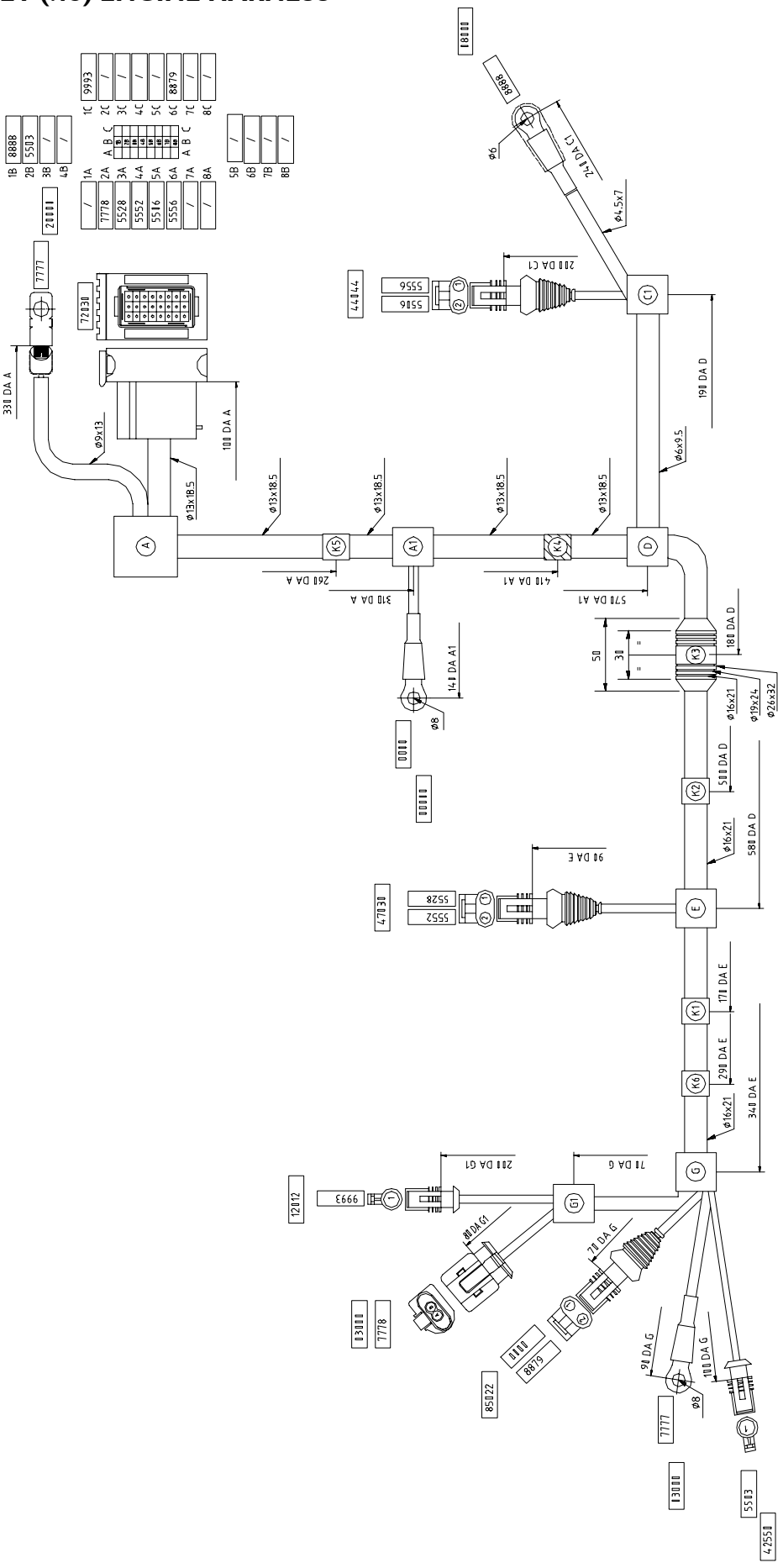

Component code	Description
00000	Ground
03000	Self-rectifying alternator with integrated voltage regulator
08000	Starter motor
12012	A/C compressor
20000	Starter battery
42550	Engine oil low pressure indicator switch
44044	Low engine oil level indicator control
47030	Transmitter for engine water temperature thermometer
72030	Engine service harness connector to cab/hood harness
78000	Solenoid valve for fuel tank connection to atmosphere
85022	Electromagnetic coupling for engine cooling

INJECTION CABLE - V.G.T (.15)

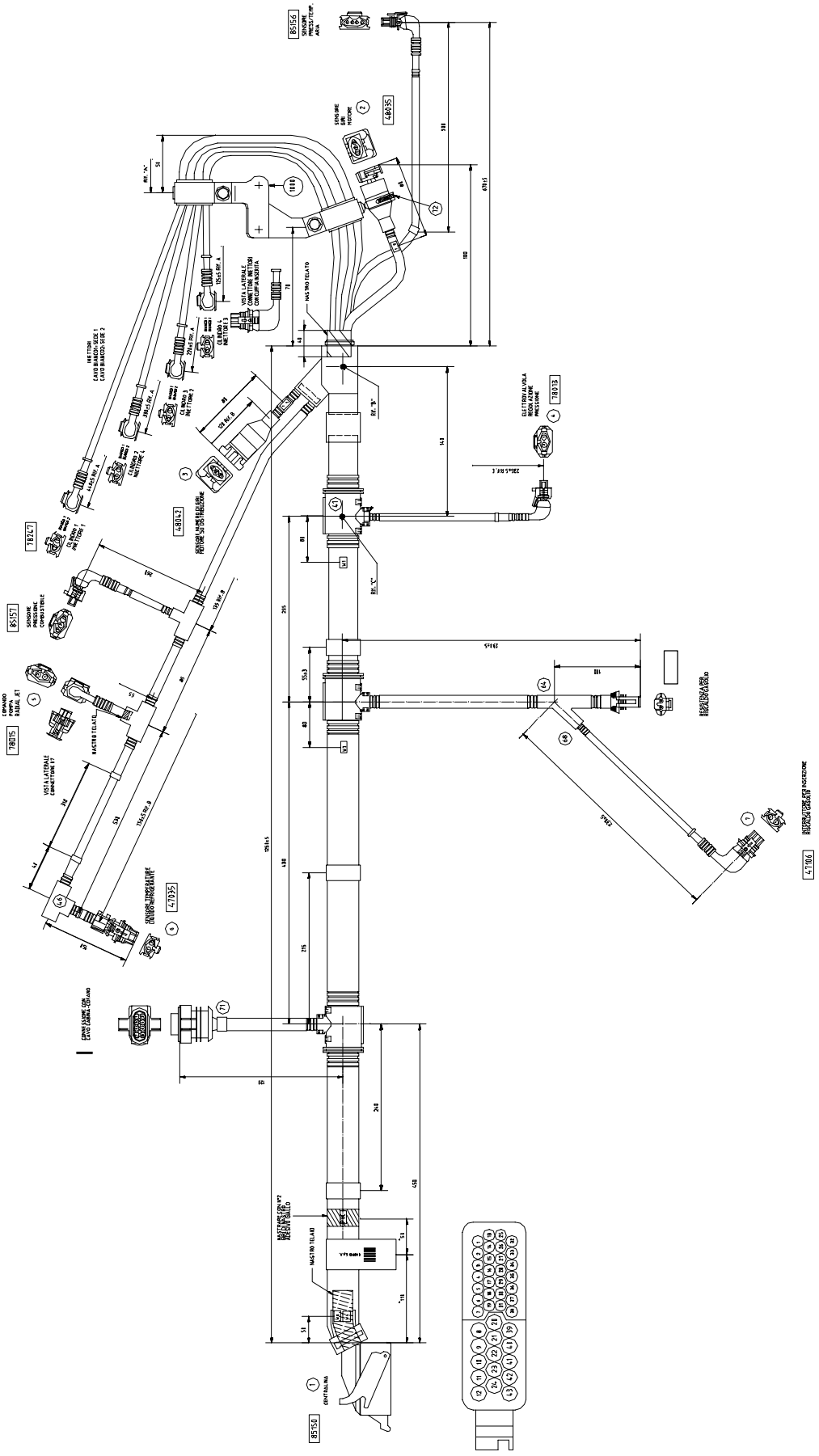

74010

Component code	Description
85150	EDC center
I	Connection to hood cab cable
47035	Coolant temperature sensor
78015	Radialjet pump control electro valve
85157	Fuel pressure sensor
78247	Electrical injection electro valve
48042	rpm sensor on distributor
48035	Engine rpm sensor
78013	Pressure adjustment electro valve
47106	Fuel heat on switch
85156	EDC blower air pressure sensor
61101	Fuel heat resistor

F1A UNIJET (.10 - .12) ENGINE HARNESS

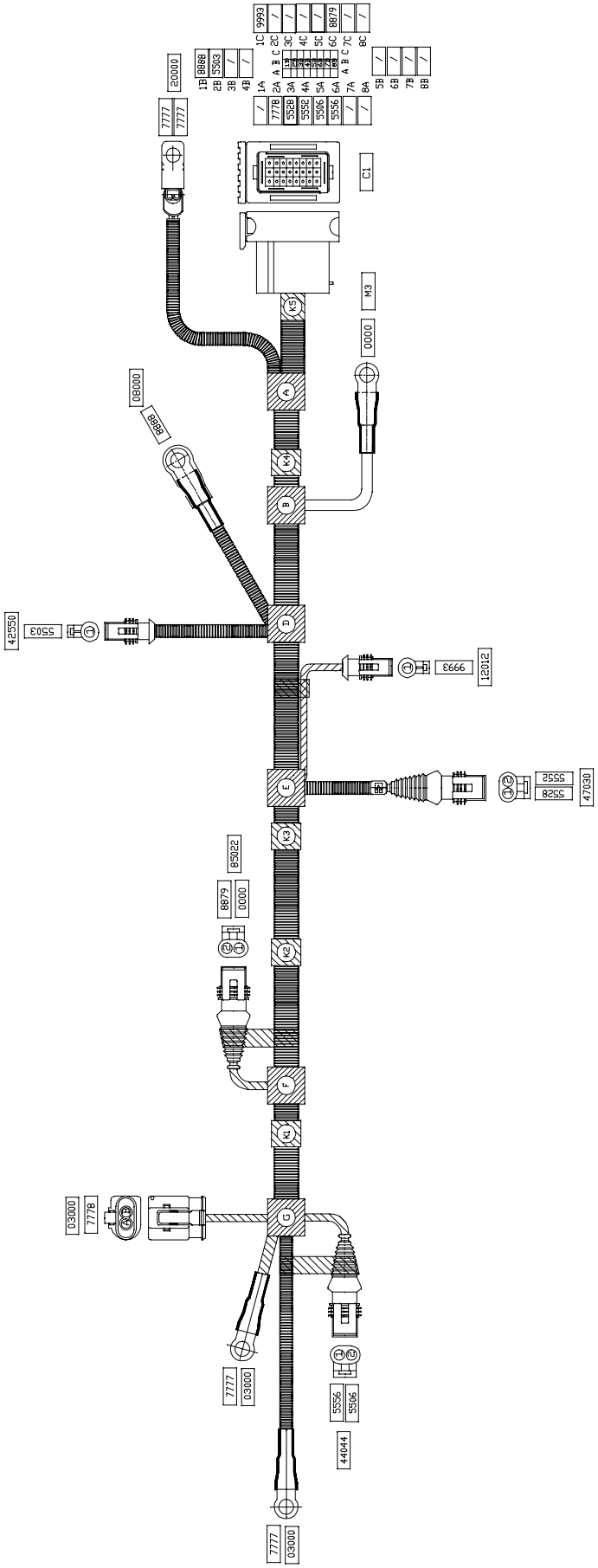

74267

Component code	Description
00000	Ground
03000	Self-rectifying alternator with integrated voltage regulator
08000	Starter motor
12012	A/C compressor
20000	Starter battery
42550	Engine oil low pressure indicator switch
44044	Low engine oil level indicator control
47030	Transmitter for engine water temperature thermometer
85022	Electromagnetic coupling for engine cooling
C1	Engine service harness connector to cab/hood harness

INJECTION CABLE - F1A (.10 - .12) WITH AND WITHOUT EGR

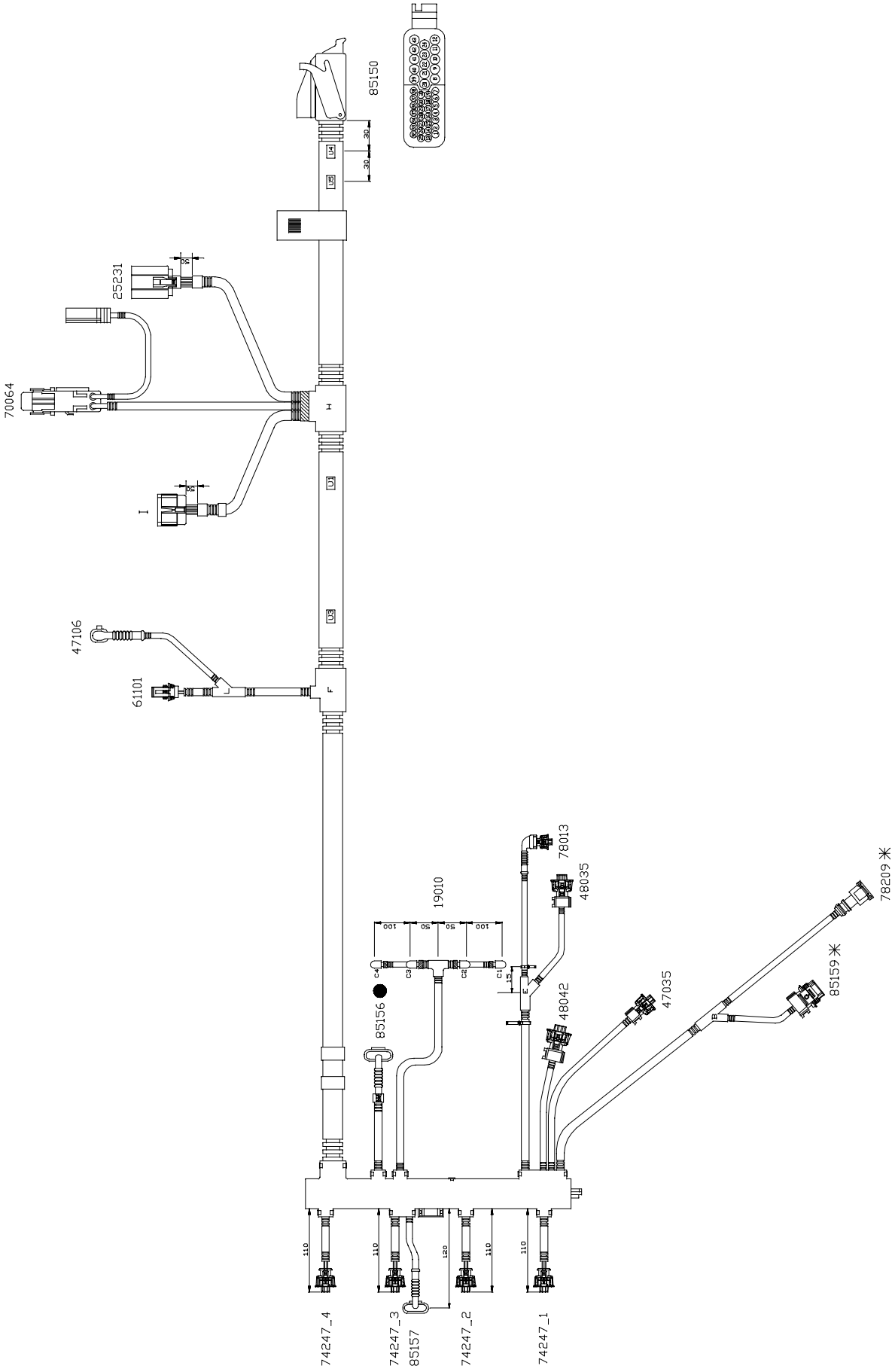

74268

Component code	Description
85150	EDC center
1	Connection to hood cab cable
47035	Coolant temperature sensor
85157	Fuel pressure sensor
78247	Electrical injection electro valve
48042	rpm sensor on distributor
48035	Engine rpm sensor
78013	Pressure adjustment electro valve
47106	Fuel heat on switch
● 85156	EDC blower air pressure sensor
61101	Fuel heat resistor
19010	Preheat plug
25231	Plug insert centre
70064	1-way fuse holder
* 85159	Environment air temperature and pressure sensor for EDC
* 78209	EGR electro valve

● Without EGR
* With EGR

TRUCK CHASSIS CABLE

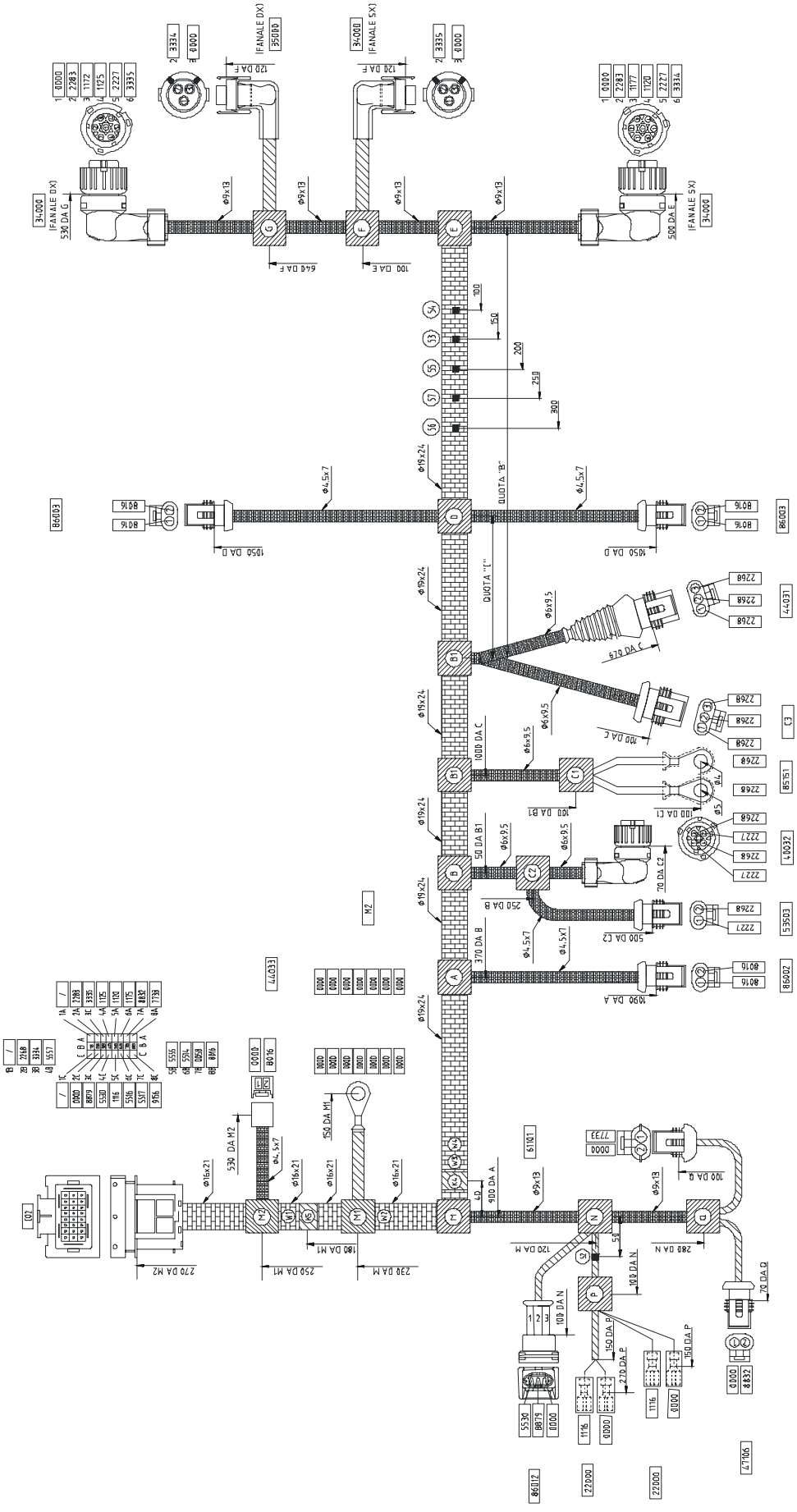

74017

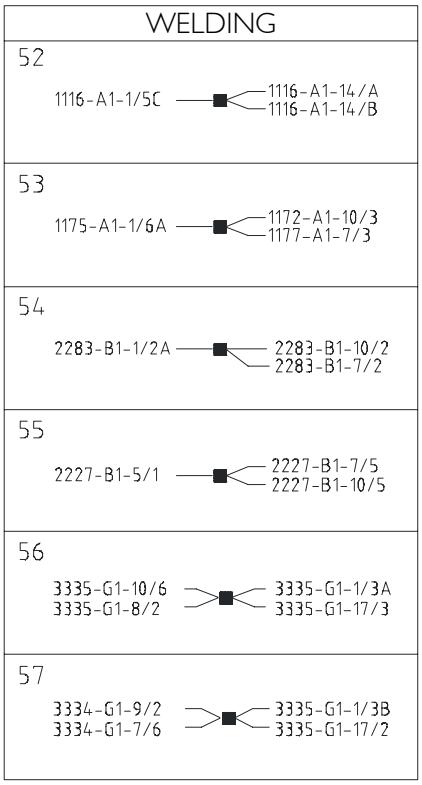

74018

Component code	Description
22000	Horn
34000	Multifunctional rear floodlight
35000	License plate light
40032	Transmitter for tachometer and tachograph
42351	Air filter clogged sensor
44031	Fuel oil level indicator transmitter with contact for min. level indicator
44033	Brake fluid low indicator control
47106	Diesel olio heating switch
53503	Backup light switch
61101	Diesel oil preheating resistor
85151	EDC injection pump
86002	Front wheel pad wear indicator sensors
86003	Rear wheel pad wear indicator sensors
86012	Water-in-fuel-filter indicator sensor
C2-C4	Chassis harness connector to cab/hood cables
C3	Chassis harness connector to side clearance lights
M2	Ground

A.B.S. PARALLEL CABLE

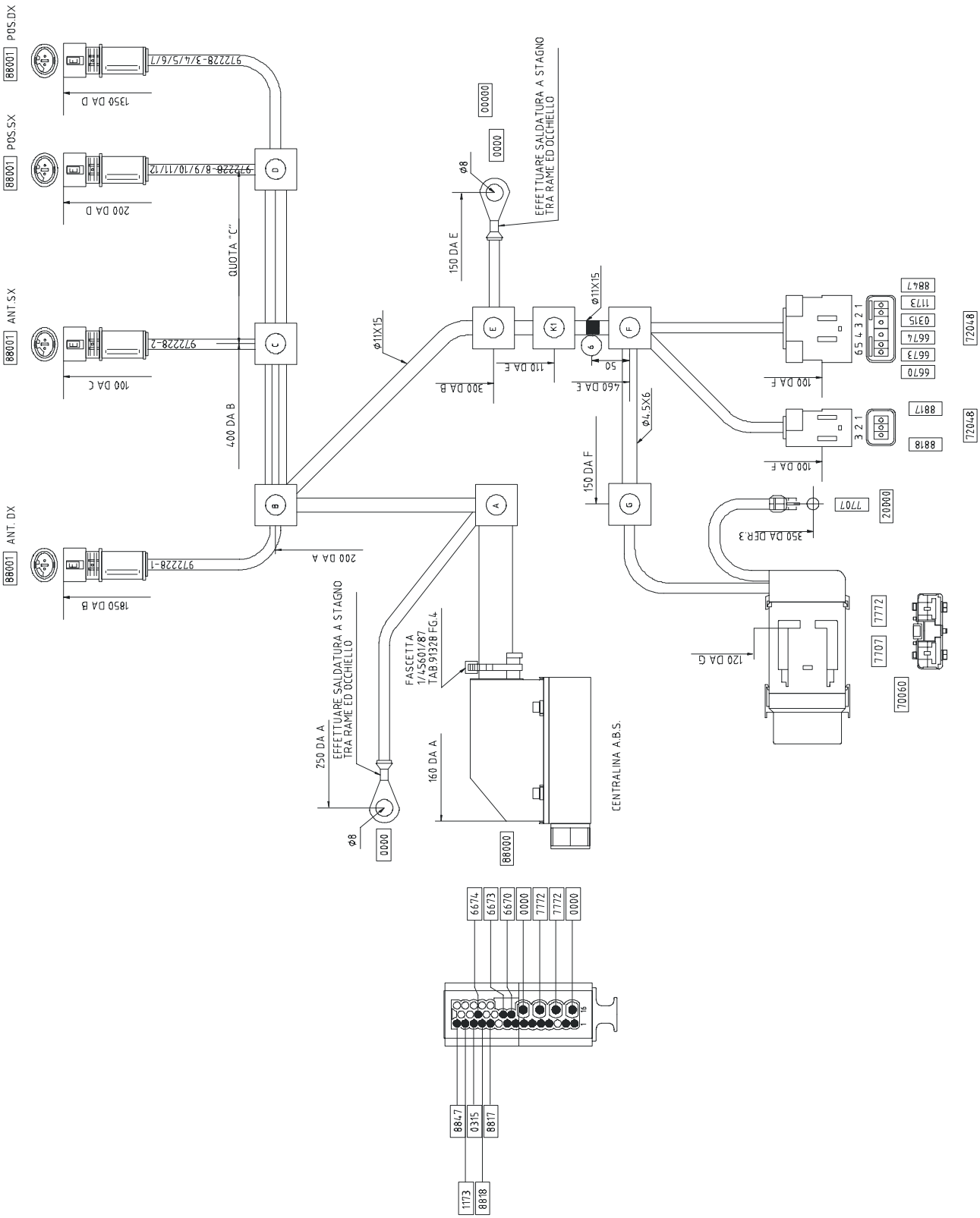

74015

WELDING

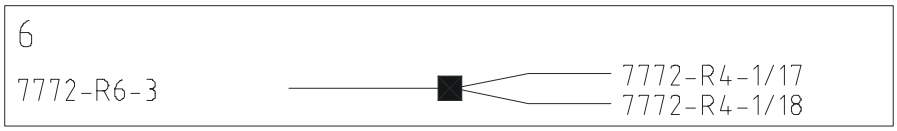

74016

Component code	Description
20000	Starter battery
70060	40A one-way fuse holder
72048	Cab-hood harness to ABS harness connector
88000	ABS electronic control unit
88001	ABS sensor

AIR-BAG CABLE WITH ONE-CONNECTOR CONTROL UNIT

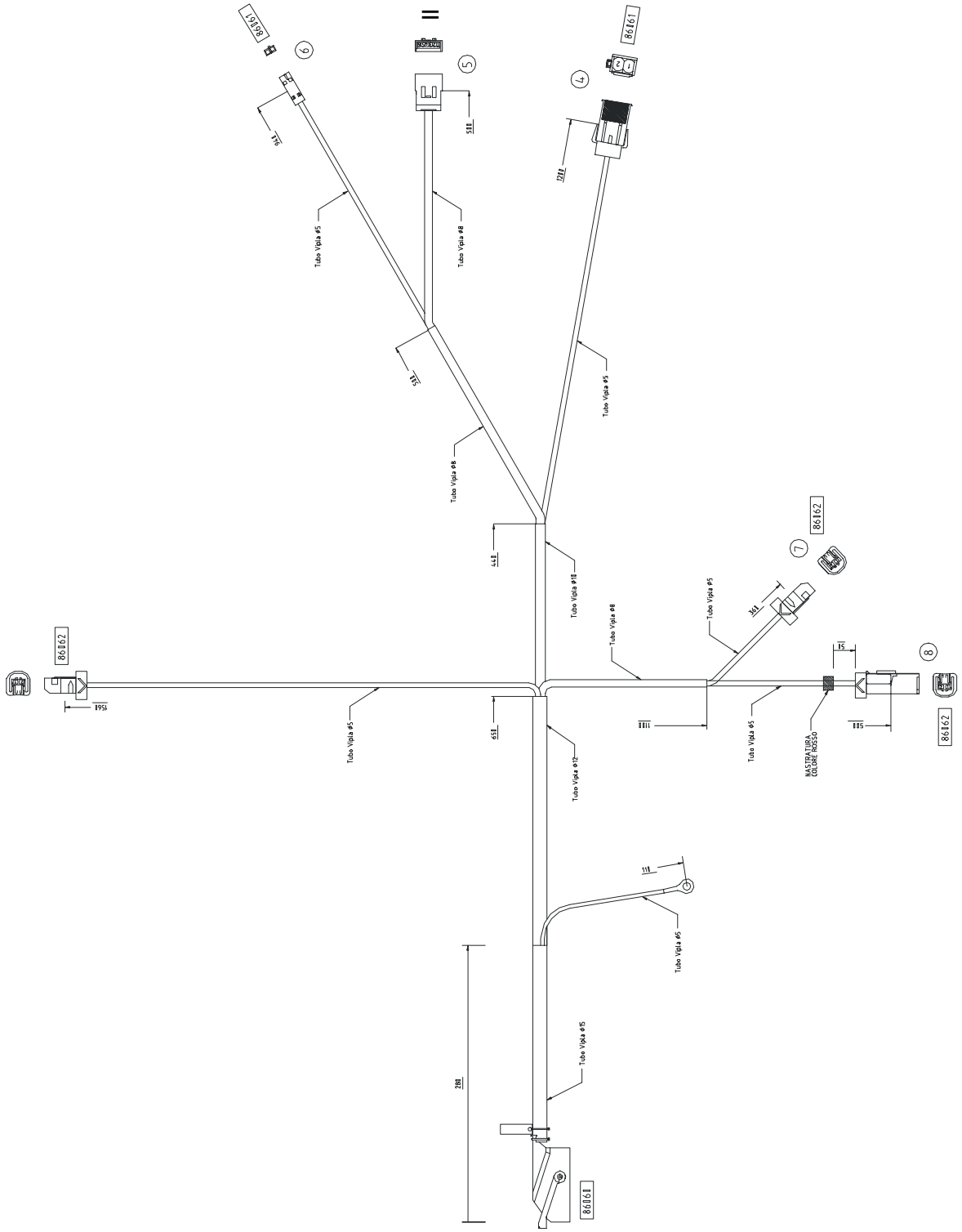

74021

Component code	Description
86060	AIRBAG control unit
86061	Passenger airbag – Driver airbag
86062	Passenger pretensioner – Central pretensioner – Driver pretensioner
II	Dashboard harness connector

AIR-BAG CABLE WITH TWO-CONNECTOR CONTROL UNIT

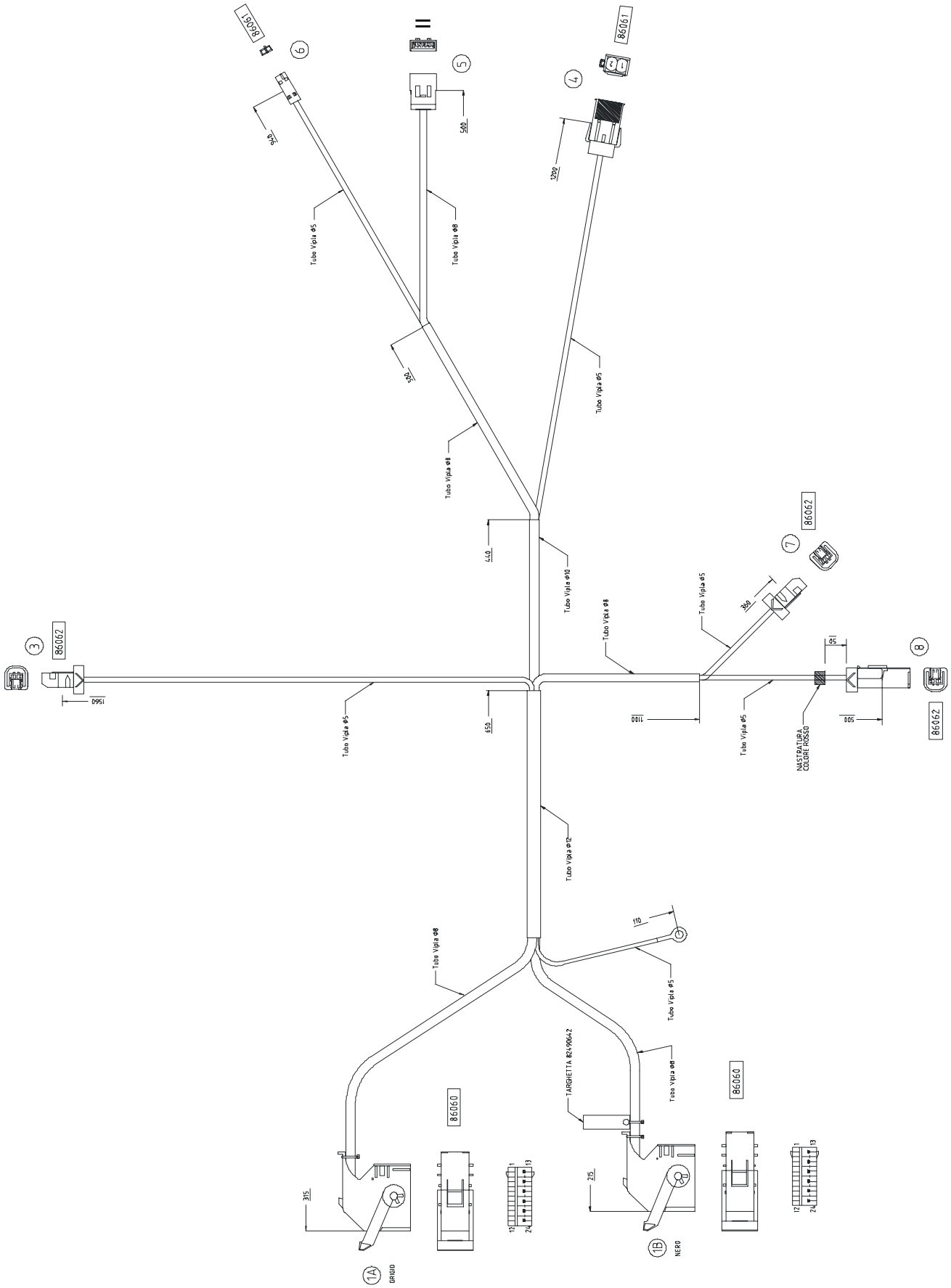

Component code	Description
86060	AIRBAG control unit
86061	Passenger airbag – Driver airbag
86062	Passenger pretensioner – Central pretensioner – Driver pretensioner
II	Dashboard harness connector

VAN INTERIOR DOME LAMP CABLES 1/2

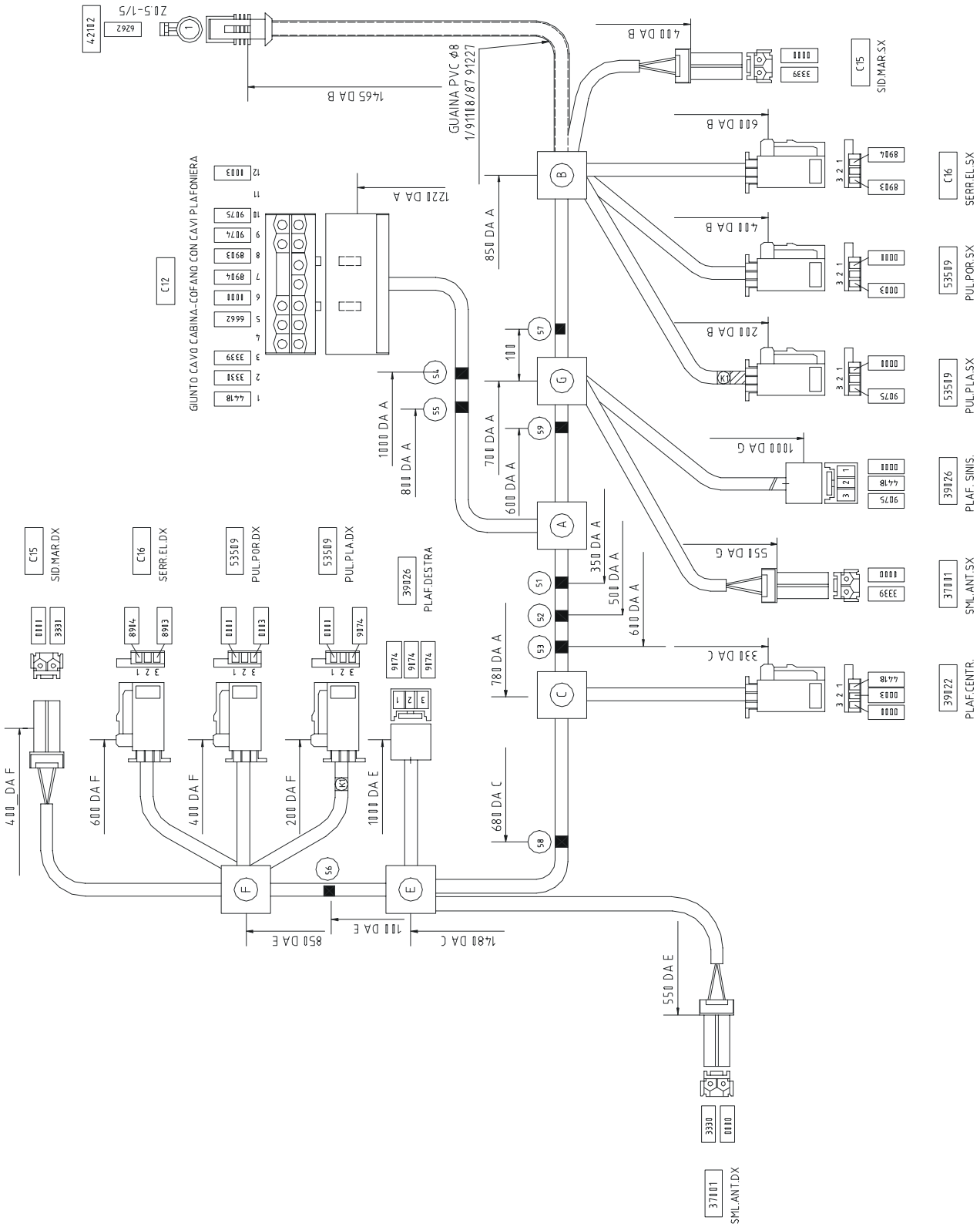

74012

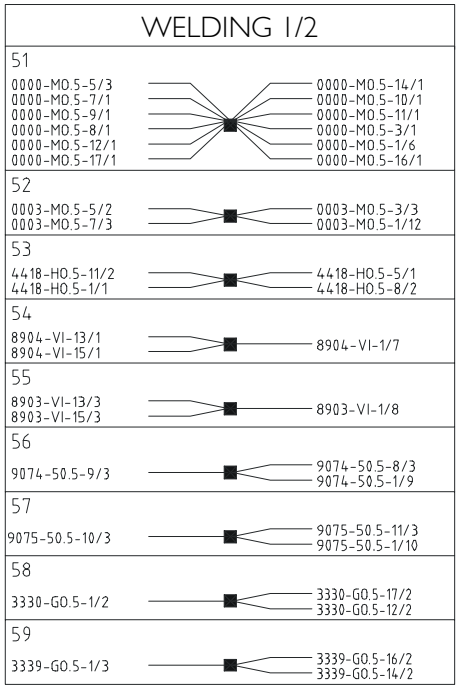

Component code	Description
C12	Cab-hood harness to dome lamp harness connector
C15	Dome lamp connectors to slide door bridle
C16	Dome lamp connectors to electrical lock contacts
37001	Front clearance lamp
39022	Interior door lamp with adjustable spot
39026	Side door lighting dome lamp
42102	Parking brake on indicator switch
53509	Interior lighting switch

VAN INTERIOR DOME LAMP CABLES 2/2

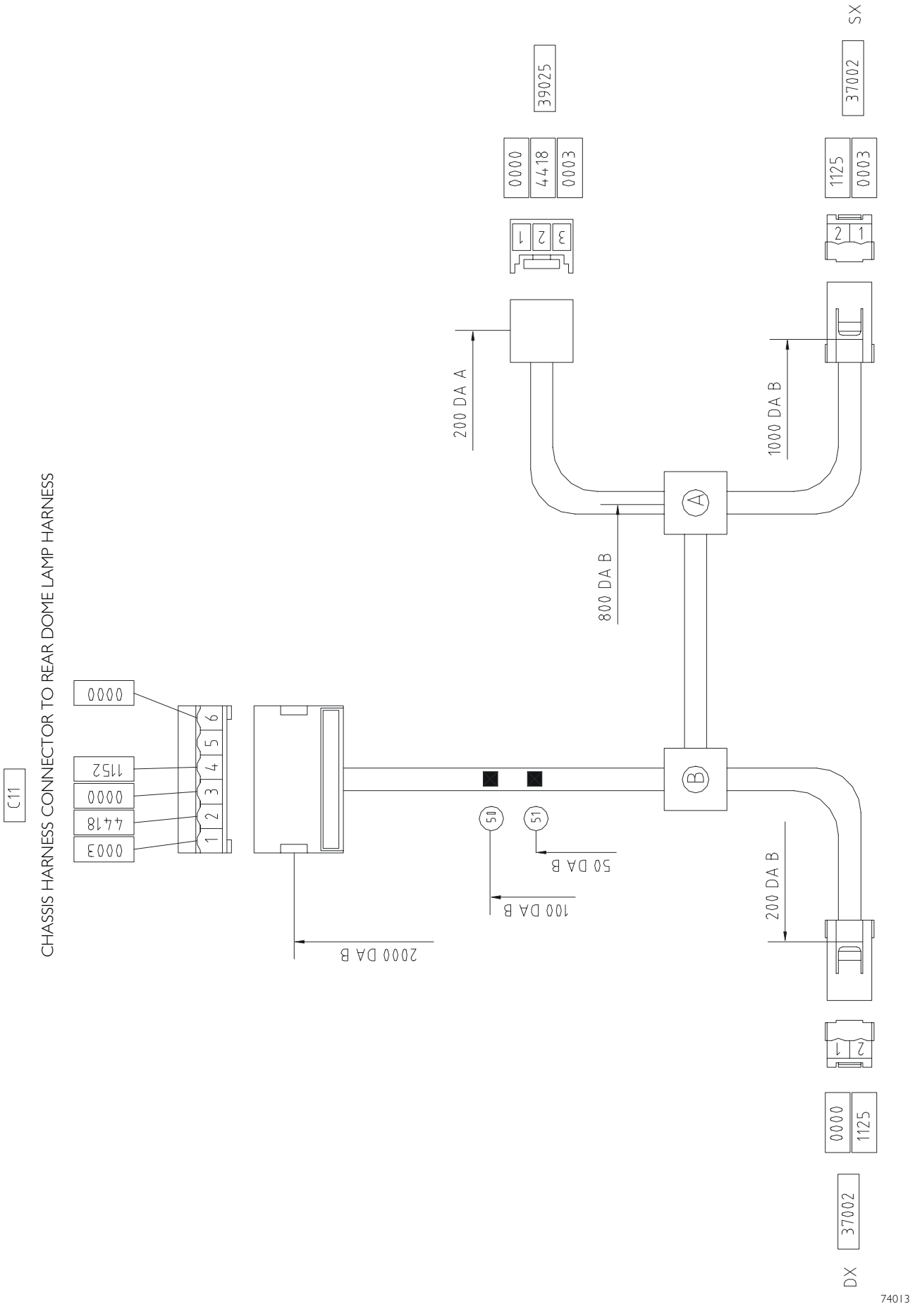

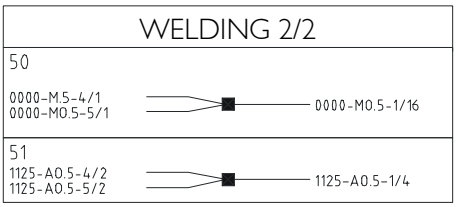

74014

Component code	Description
37002	Rear clearance lamp
39025	Liftgate lighting dome lamp
C11	Chassis harness connector to rear dome lamp harness

TRUCK INTERIOR DOME LAMP CABLES

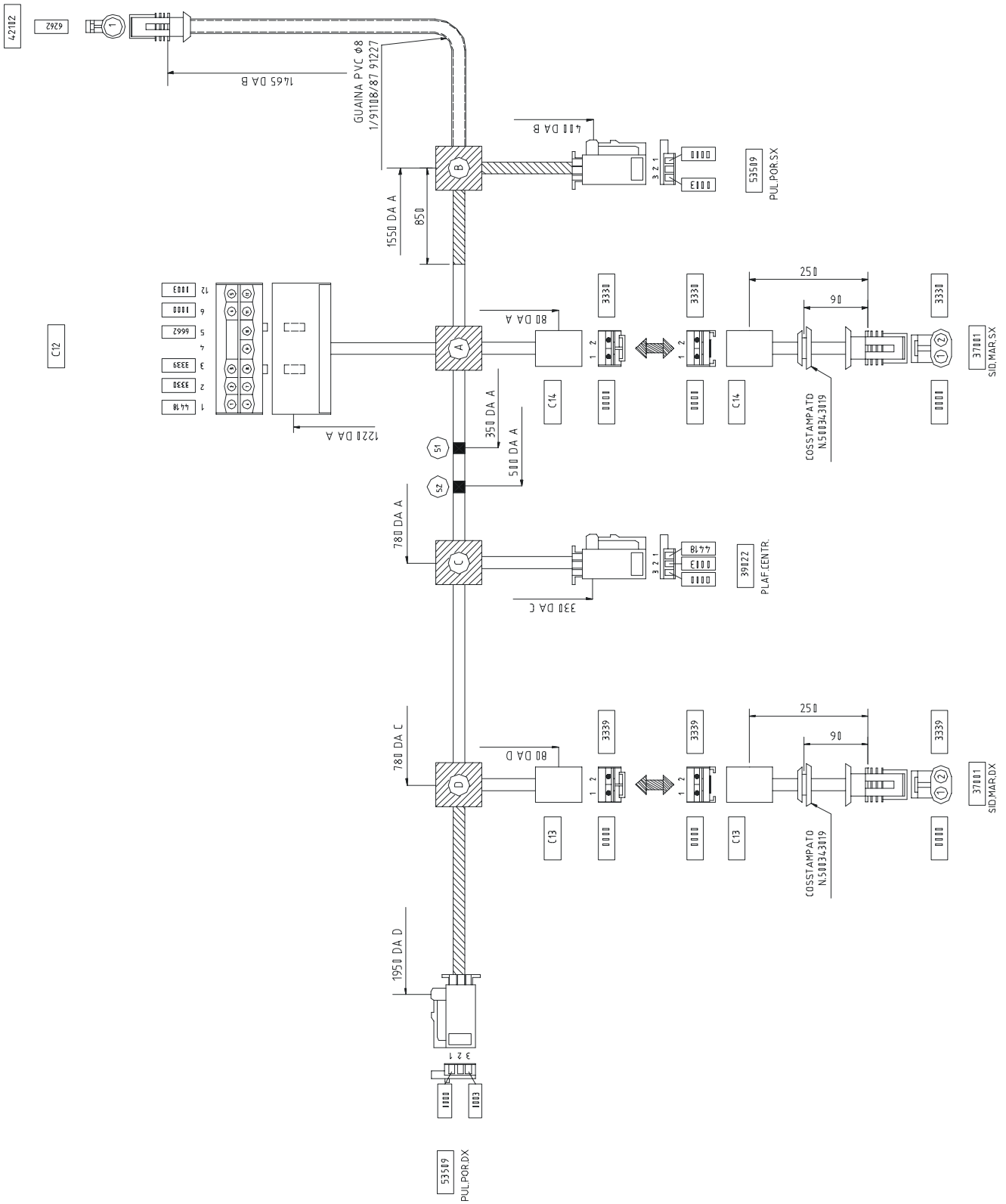

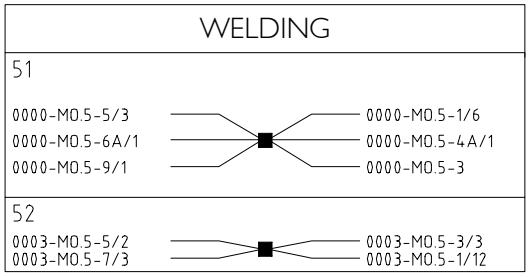

74020

Component code	Description
37001	Front clearance lamp
39022	Interior door lamp with adjustable spot
42102	Parking brake on indicator switch
53509	Interior lighting switch
C12	Cab-hood harness to dome lamp harness connector
C13	Cab-hood harness to RH front clearance lamp connector
C14	Cab-hood harness to LH front clearance lamp connector

CONNECTORS BETWEEN CABLES

Connection between cab/bonnet cable and injection cable (Unijet)

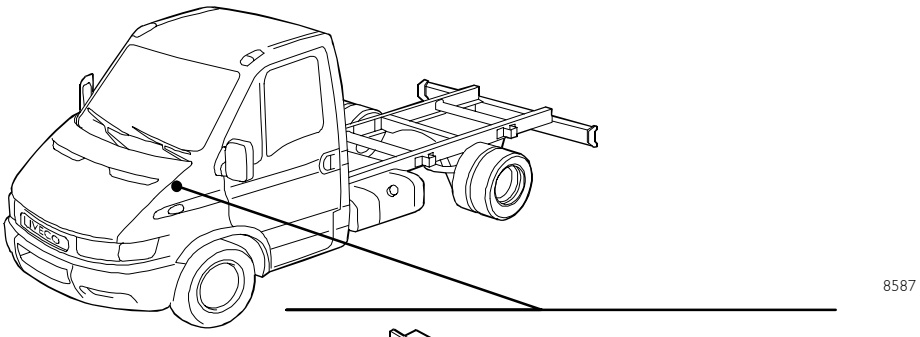

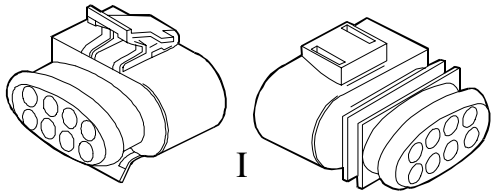

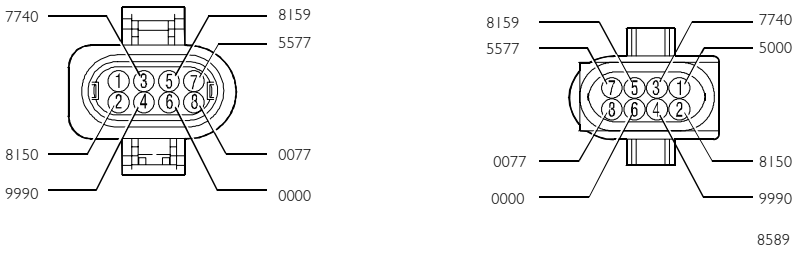

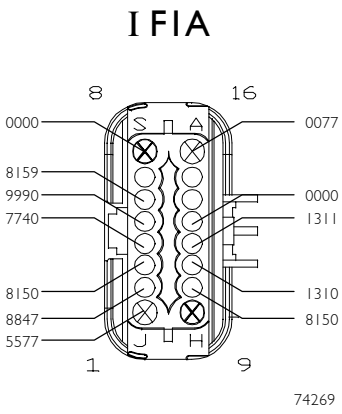

Ref.	Ref. (F1A)	Cable colour code	Function
I 1		5000	To pin 36 of EDC electronic control unit
2	3	8150	Fuel pump engagement relay
3	4	7740	Relay engagement for engine cooling electromagnetic joint control
4	5	9990	Air conditioning compressor switching off
5	6	8159	Fuel oil heating circuit switching on
6	8	0000	Earth
7	1	5577	Fuel oil heating resistance supply
8	16	0077	Fuel oil heating resistance earth
	10	8150	Preheat plug centre positive (pin-86)
	11	1310	Preheat plug centre control (pin-D1), (EDC pin-B37)
	12	1311	Preheat plug centre control (pin-ST), (EDC pin-B42)
	13	0000	Preheat plug centre mass (pin-31)
	2	8847	Speed adjustment sensor positive
	7	-	Free
	9	-	Free
	14	-	Free
	15	-	Free

Connection between cab/bonnet cable and air bag cable

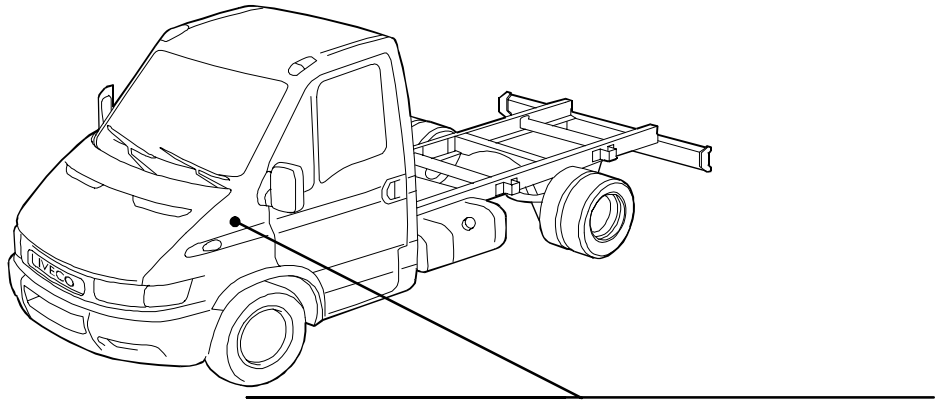

8587

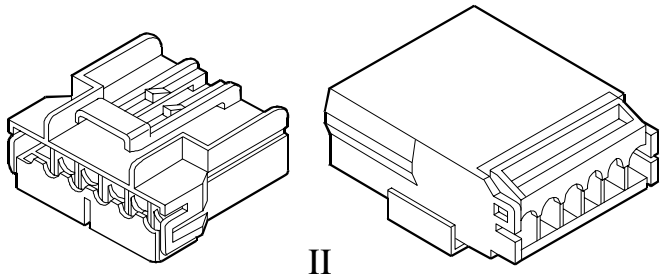

8590

II



8591

Ref.		Cable colour code	Function
II	1	6722-AR	Supply (+15)
	2	6750-AR	Supply (+15)
	3	8087-S	Supply (+15) for air bag electronic control unit
	4	2292-BR	To 38-pin diagnostic connector (cell 6)
	5	0000-HN	Earth
	6	6711-G	To air bag failure warning light

Connection between cab/bonnet cable and rear differential lock cable

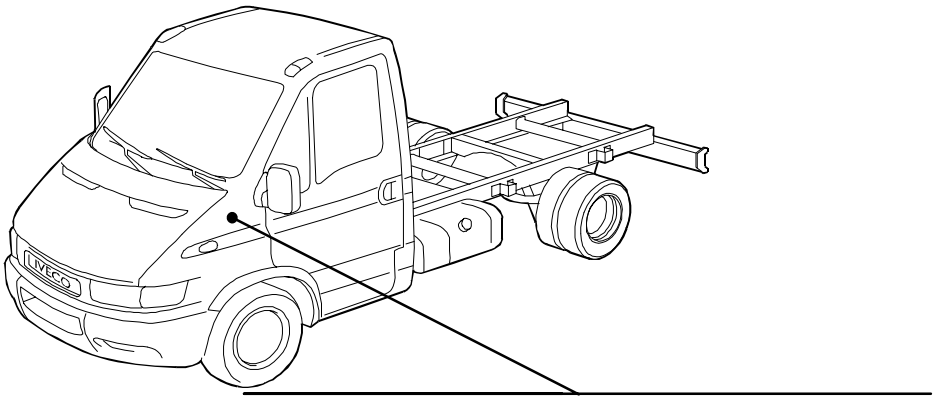

8587

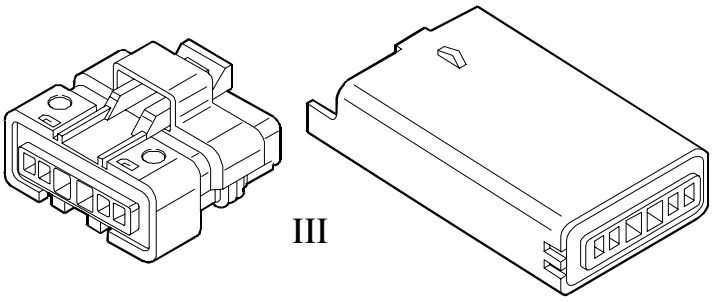

8592



8593

Ref.		Cable colour code	Function
III	1	2222	Tachometric signal
	2	8879	Supply (+15)
	3	7777	Supply (+30)
	4	-	Spare
	5	3400	Rear differential lock engagement
	6	6660	To rear differential lock on warning light

Connection between cab/bonnet cable and cable for tachometer

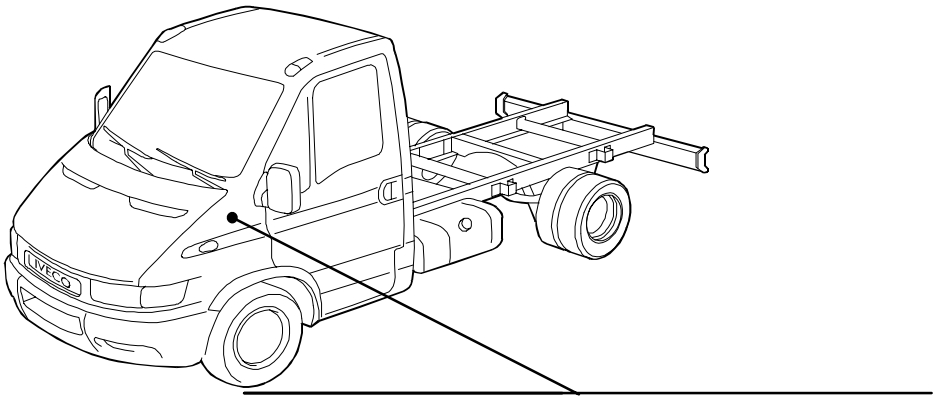

8587

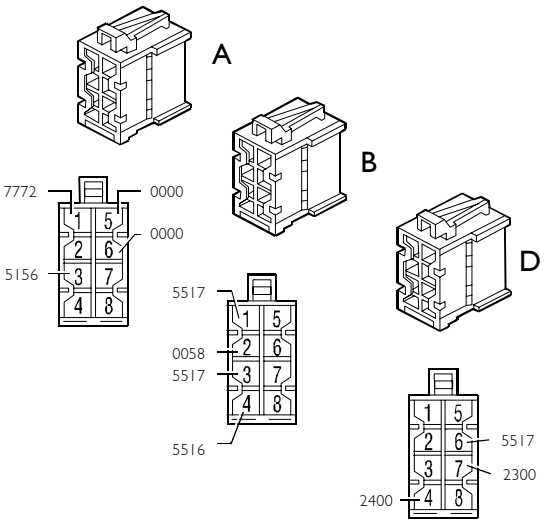

8596

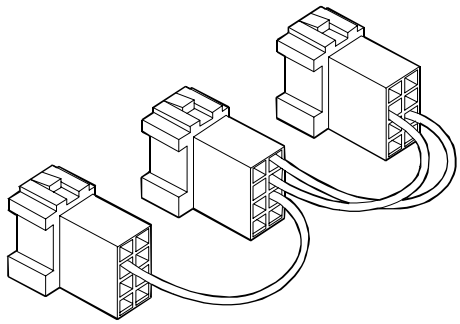

8594

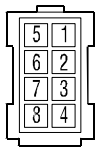

8595

Ref.		Cable colour code	Function
40011A (white)	1	7772	Supply (+30)
	2	-	Spare
	3	5156	Supply (+15)
	4	-	Spare
	5	0000	Earth
	6	0000	Earth
	7	-	Spare
	8	-	Spare
40011B (yellow)	1	5517	Supply (+15)
	2	0058	Earth
	3	5517	Tachometric signal
	4	5516	To transmitter for tachometer
	5	-	Spare
	6	-	Spare
	7	-	Spare
	8	-	Spare
40011D (brown)	1	-	Spare
	2	-	Spare
	3	-	Spare
	4	2400	To instrument cluster with warning lights
	5	-	Spare
	6	5517	Tachometric signal
	7	2300	To instrument cluster with warning lights
	8	-	Spare

Connection between frame cable and right tail lamp cable

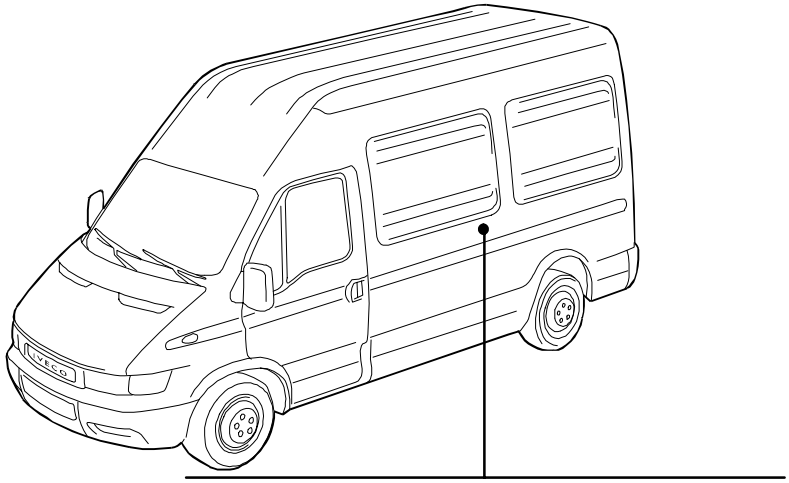

8597

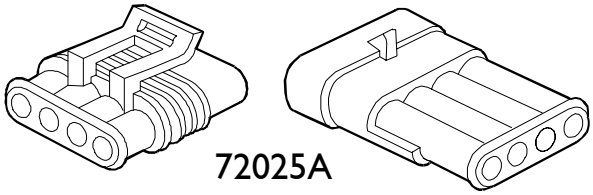

8598

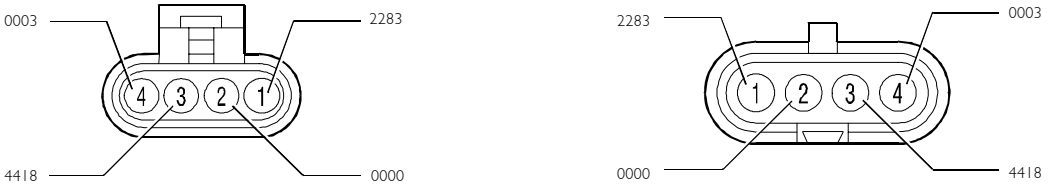

8599

Ref.		Cable colour code	Function
72025A	1	2283	Rear fog guard
	2	0000	Earth
	3	4418	Rear roof lamp supply
	4	0003	Switching on interior lights

Connection between frame cable and right tail lamp cable

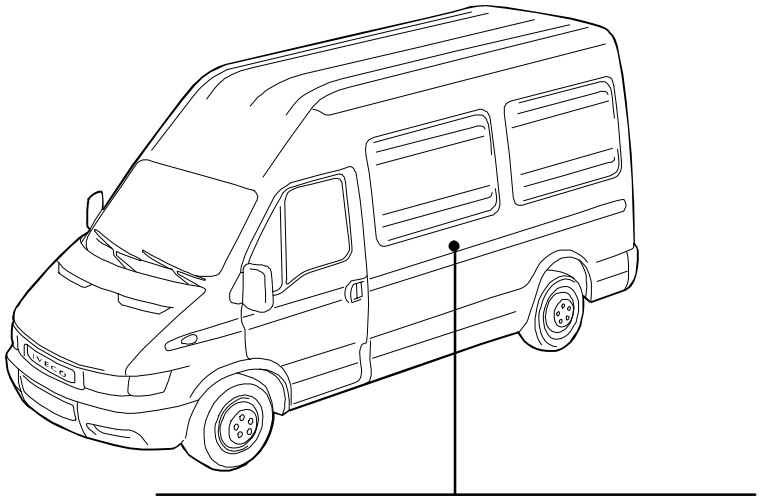

8597

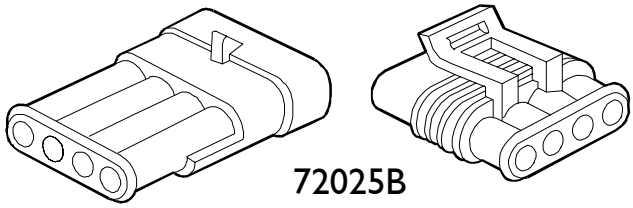

8600

72025B



8601

Ref.		Cable colour code	Function
72025B	1	1125	Direction indicator
	2	1172	Stop light
	3	3335	Side light
	4	2227	Reversing light

Connection between frame cable and left tail lamp cable

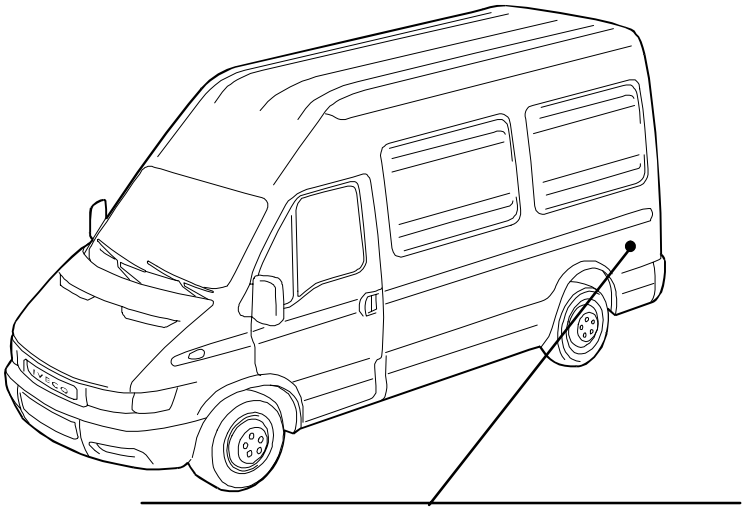

8597

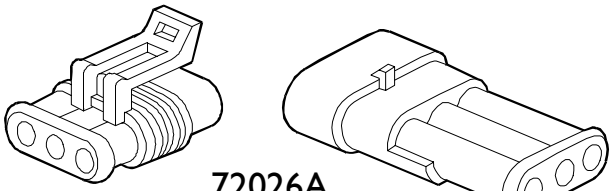

72026A

8602



8603

Ref.	Cable colour code	Function
1	2227	Reversing light
72026A 2	2283	Rear fog guard
3	0000	Earth

Connection between frame cable and left tail lamp cable

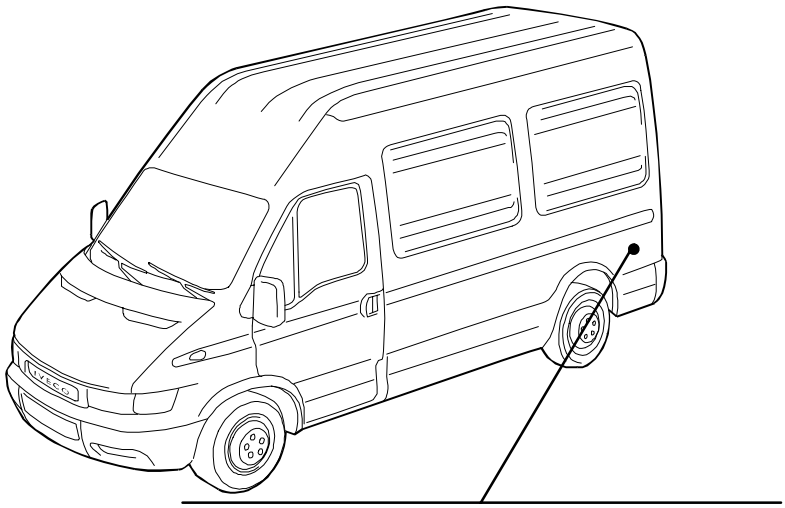

8597

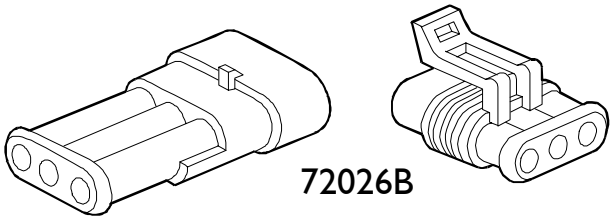

6804



8605

Ref.	Cable colour code	Function
1	1120	Direction indicator
72026B 2	1177	Stop light
3	3334	Side light

Connection between cab/bonnet cable and engine cable (engine PC/NA) .9

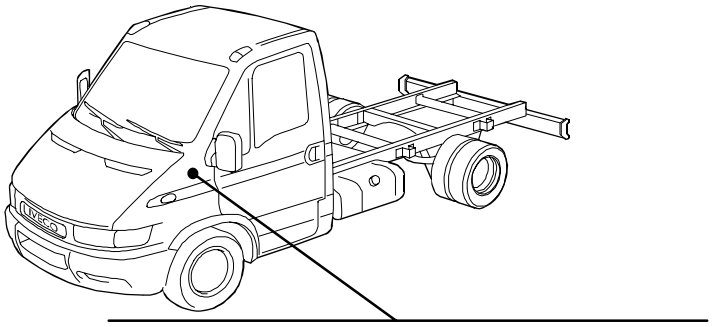

8587

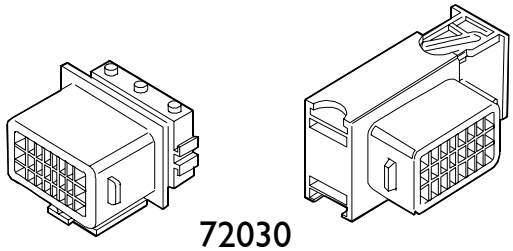

72030

8606

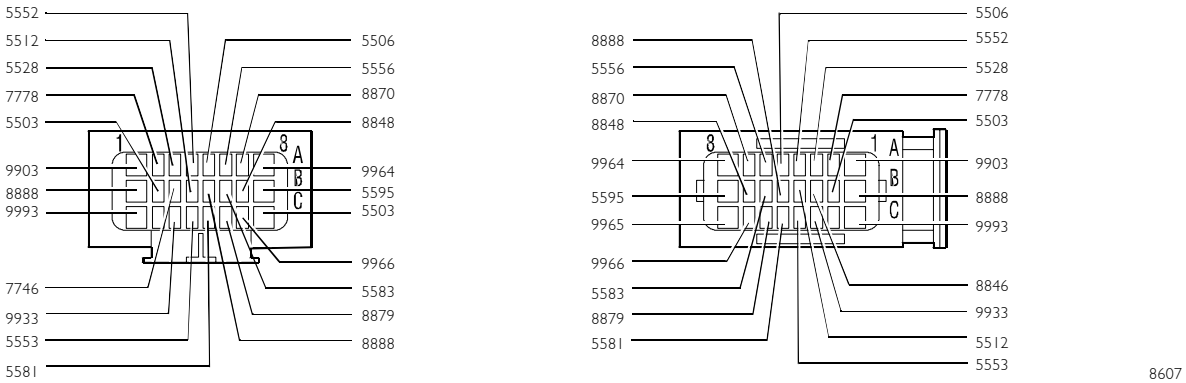

8607

Ref.		Cable colour code	Function
72030	1A	9903	To engine stop solenoid
	2A	7778	Low battery charge signal
	3A	5528	Engine coolant fluid temperature
	4A	5552	High engine coolant temperature signal
	5A	5506	Engine oil level signal
	6A	5556	Engine oil level signal
	7A	8870	Supply (+15)
	8A	9964	Supply (+30)
	1B	8888	Engine starting
	2B	5503	Low engine oil pressure signal
	3B	7746-8846	To variable resistance for advance variator control
	4B	5512	Engine rpm signal repetition
	5B	8888	Supply (+50)
	6B	5583	EGR anti-pollution device failure signal
	7B	8848	Switching on advance variator
	8B	5595	To 38-pin diagnostic connector (cell 2)
	1C	9993	To air conditioner compressor
	2C	-	Spare
	3C	9933	Switching on engine cooling electromagnetic joint
	4C	5553	Before-after warming on signal
	5C	5581	Switching off air conditioner compressor
	6C	8879	Switching on engine cooling electromagnetic joint
	7C	9966	To engine stop solenoid
	8C	5503-9965	Switching on relay for advance variator control

Connection between cab/bonnet cable and engine cable (engine ID/TCA) .11

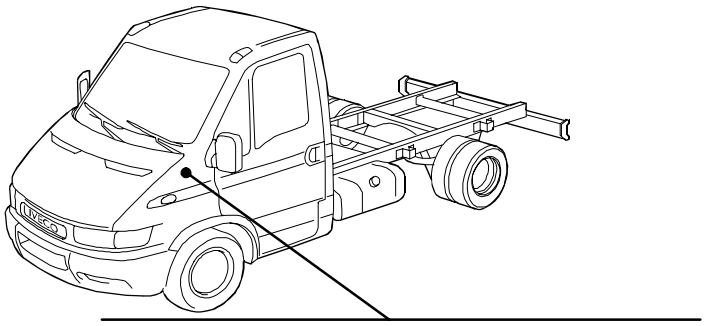

8587

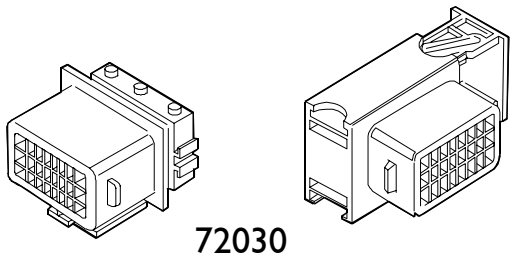

8606

72030

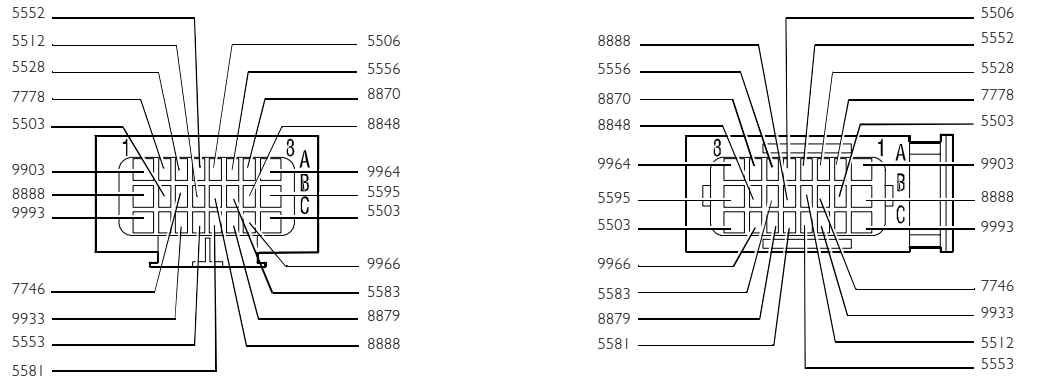

8607

Ref.		Cable colour code	Function
72030	1A	9903	To engine stop solenoid
	2A	7778	No battery charge signal
	3A	5528	Engine coolant fluid temperature
	4A	5552	High engine coolant temperature signal
	5A	5506	Engine oil level signal
	6A	5556	Engine oil level signal
	7A	8870	Supply (+15)
	8A	9964	Supply (+30)
	1B	8888	Engine starting
	2B	5503	Low engine oil pressure signal
	3B	7746	To relay/fuse holder support
	4B	5512	Engine rpm signal
	5B	8888	Supply (+50)
	6B	5583	To instrument cluster with warning lights
	7B	8848	Switching on advance variator
	8B	5595	To 38-pin diagnostic connector (cell 2)
	1C	9993	To air conditioner compressor
	2C	-	Spare
	3C	9933	To relay/fuse holder support
	4C	5553	Before-after warming on signal
	5C	5581	To relay/fuse holder support
	6C	8879	Switching on air conditioner compressor
	7C	9966	To engine stop solenoid
	8C	5503	Switching on relay for advance variator control

Connection between cab/bonnet cable and engine cable (Unijet engine) .13 - F1A

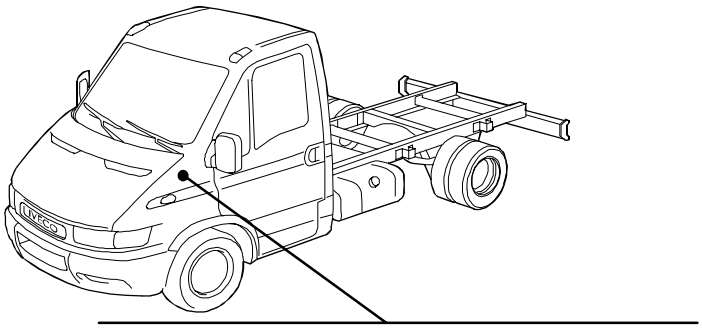

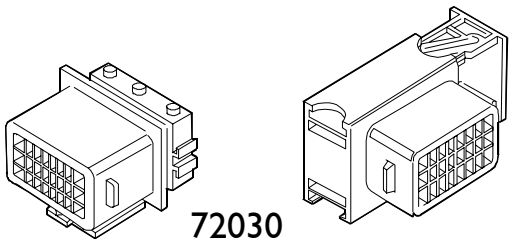

72030

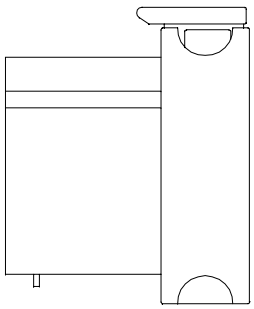

C1

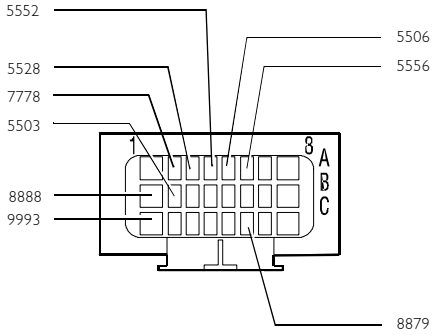

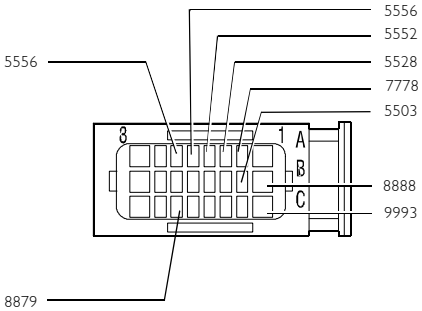

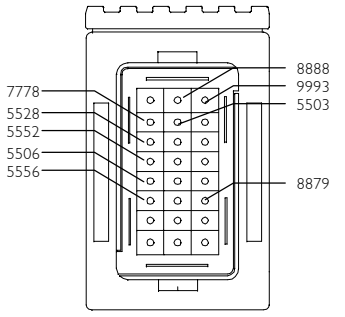

74270

Rif.	Rif. (F1A)	Cable colour code	Function
1A	1A	-	Spare
2A	2A	7778	No battery charge signal
3A	3A	5528	Engine coolant fluid temperature
4A	4A	5552	High engine coolant temperature signal
5A	5A	5506	Engine oil level signal
6A	6A	5556	Engine oil level signal
7A	7A	-	Spare
8A	8A	-	Spare
1B	1B	8888	Engine starting
2B	2B	5503	Low engine oil pressure signal
3B	3B	-	Spare
4B	4B	-	Spare
72030 5B	C1 5B	-	Spare
6B	6B	-	Spare
7B	7B	-	Spare
8B	8B	-	Spare
1C	1C	9993	To air conditioner compressor
2C	2C	-	Spare
3C	3C	-	Spare
4C	4C	-	Spare
5C	5C	-	Spare
6C	6C	8879	Switching on engine cooling electromagnetic joint
7C	7C	-	Spare
8C	8C	-	Spare

Connection between cab/bonnet cable and roof lamp cable inside cab

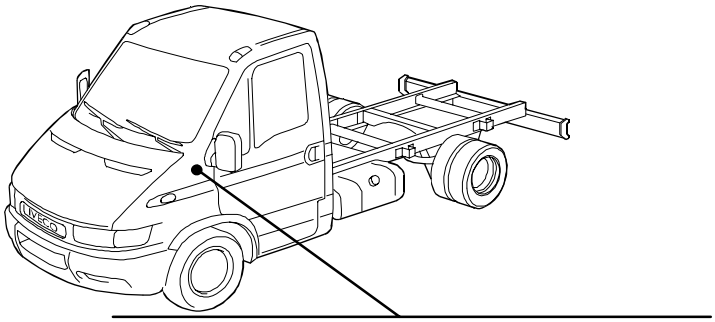

8587

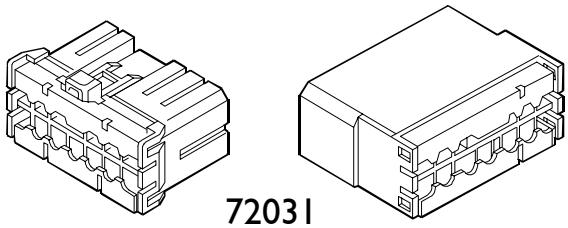

72031

8608



8609

Ref.		Cable colour code	Function
72031	1	4418	Supply (+30)
	2	3330	Left front clearance light
	3	3339	Right front clearance light
	4	-	Spare
	5	6662	Handbrake on signal
	6	0000	Earth
	7	8904	To motor for side door closing control (van)
	8	8903	To motor for side door closing control (van)
	9	9074-0204	To switch for turning on interior lights (van)
	10	9074-0205	To switch for turning on interior lights (van)
	11	-	Spare
	12	0000-0003	Turning on roof lamp

Connection between cab/bonnet cable and frame cable (engines PC/NA and ID/TCA)

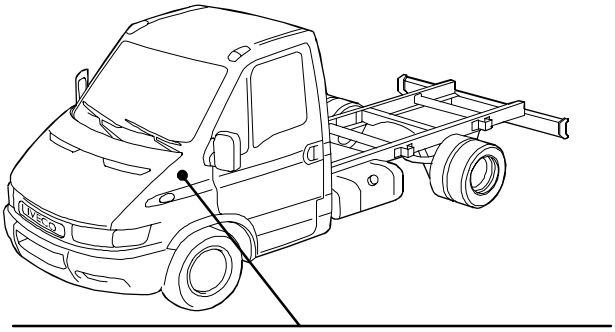

8587

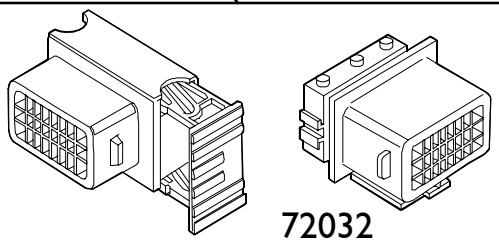

72032

8610

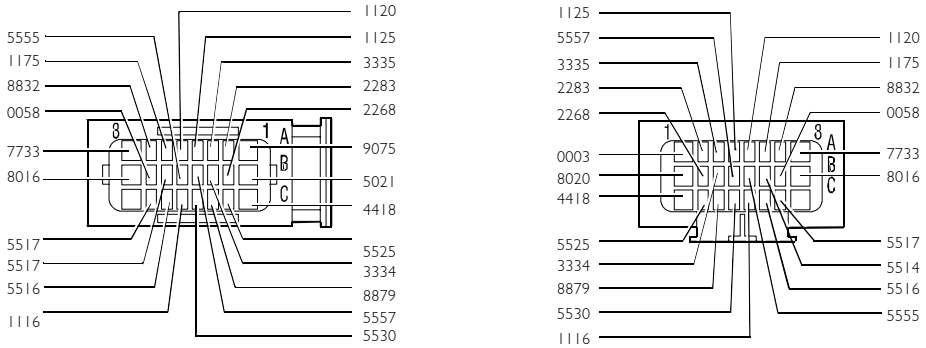

8611

Ref.		Cable colour code	Function
72032	1A	9075-0003	Rear door open signal (van)
	2A	2283	Rear fog guard
	3A	3335	Left front and right rear side light, left number plate light
	4A	1125	Right rear direction indicator
	5A	1120	Left rear direction indicator
	6A	1175	Stop lights
	7A	8832	Switching on relay for fuel oil heating circuit control
	8A	7733	Fuel oil heating resistance supply
	1B	5021-8020	Rear-screen heating resistances supply (van)
	2B	2268	Reversing light
	3B	3334	Right front and left rear side light, right number plate light
	4B	5557	Fuel level gauge
	5B	5555	Fuel reserve signal
	6B	5517-5514	Supply (+15) for transmitter for tachometer
	7B	0058	Earth for transmitter for tachometer
	8B	8016	Brake wear signal
	1C	4418	Supply (+30) for rear roof lamp (van)
	2C	5525	Low power steering fluid level signal
	3C	8879	Supply (+15)
	4C	5530	Water in fuel filter signal
	5C	1116	Horns
	6C	5516	To transmitter for tachograph
	7C	5517	Tachometric signal
	8C	-	Spare

Connection between cab/bonnet cable and frame cable (Unijet engine)

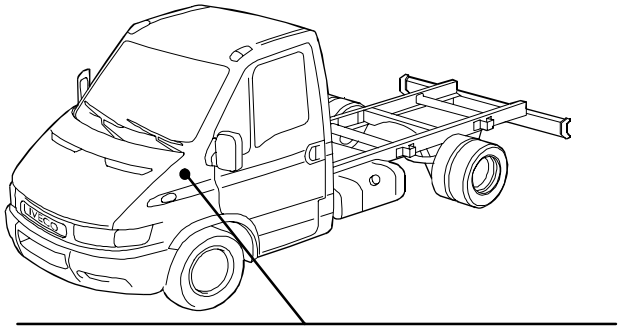

8587

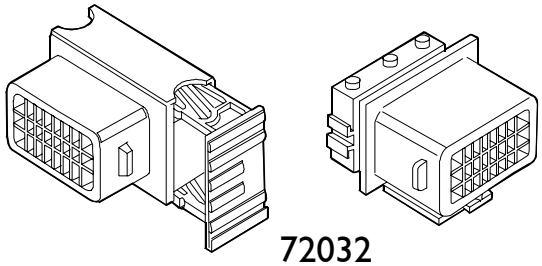

8610

72032

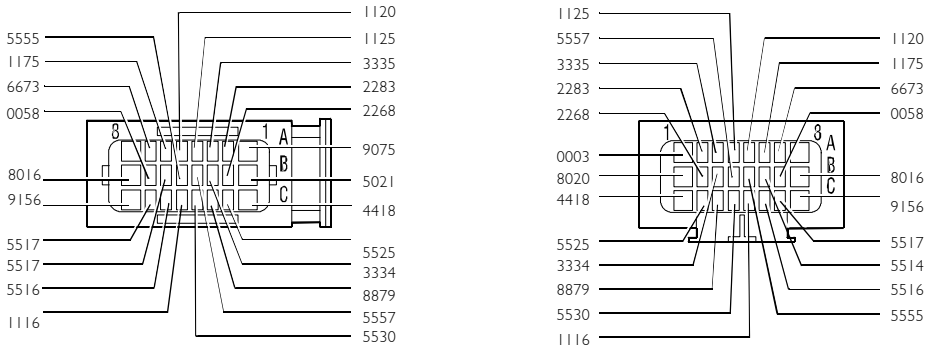

8611

Ref.		Cable colour code	Function
72032	1A	9075-0003	Rear door open signal (van)
	2A	2283	Rear fog guard
	3A	3335	Left front and right rear side light, left number plate light
	4A	1125	Right rear direction indicator
	5A	1120	Left rear direction indicator
	6A	1175	Stop lights
	7A	6673	Switching on relay for fuel filter clogged signal
	8A	-	Spare
	1B	5021-8020	Rear-screen heating resistances supply (van)
	2B	2268	Reversing light
	3B	3334	Right front and left rear side light, right number plate light
	4B	5557	Fuel level gauge
	5B	5555	Fuel reserve signal
	6B	5517-5514	Supply (+15) for transmitter for tachometer
	7B	0058	Earth for transmitter for tachometer
	8B	8016	Brake wear signal
	1C	4418	Supply (+30) for rear roof lamp (van)
	2C	5525	Low power steering fluid level signal
	3C	8879	Supply (+15)
	4C	5530	Water in fuel filter signal
	5C	1116	Horns
	6C	5516	To transmitter for tachograph
	7C	5517	Tachometric signal
	8C	9156	Switching on electric fuel pump

Connection between cab/bonnet cable and 13 pin current socket cable or rear door opening/closing cable (van)

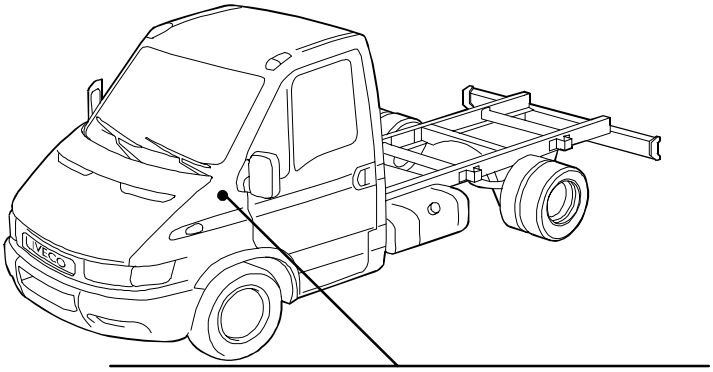

8587

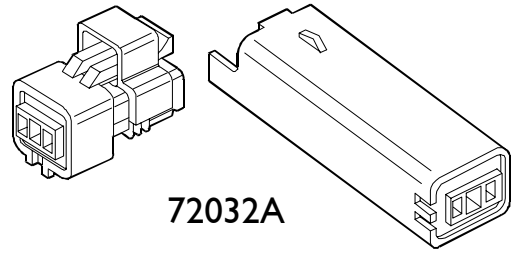

72032A

8612

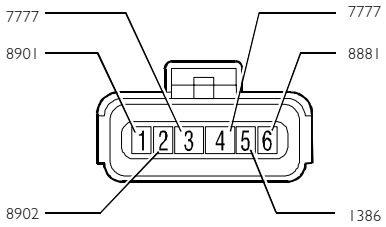

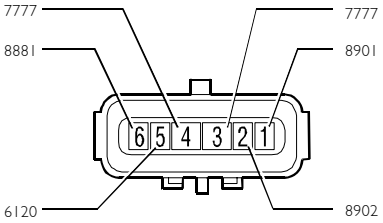

8593

Ref.	Cable colour code	Function
1	8901	To pin 8 connector A of electronic control unit for central door locking
2	8902	To pin 7 connector A of electronic control unit for central door locking
72032A 3	7777	Supply (+30)
4	7777	Supply (+30)
5	1386-6120	Trailer direction indicator on signal
6	8881	Supply (+15)

Connection between cab/bonnet cable and brake wear/air cleaner clogged cable

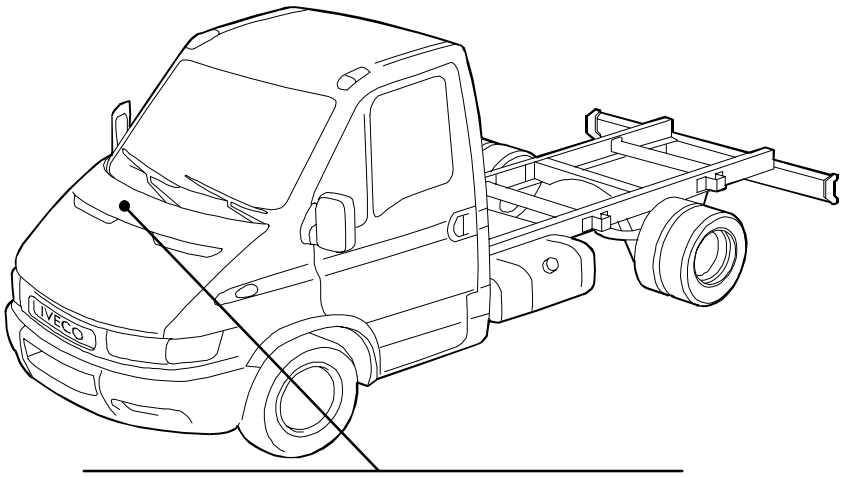

8587

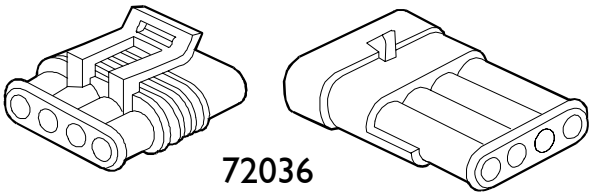

72036

8598



8601
8599

Ref.	Cable colour code	Function
72036 1	8016	Brake wear signal
72036 2	8016	Brake wear signal
72036 3	0000	Earth
72036 4	6663	Air cleaner clogged signal

Connection between cab/bonnet cable and self-levelling suspension cable

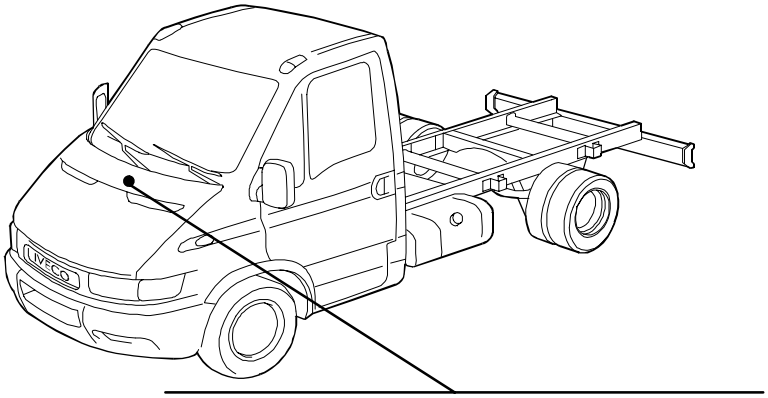

8587

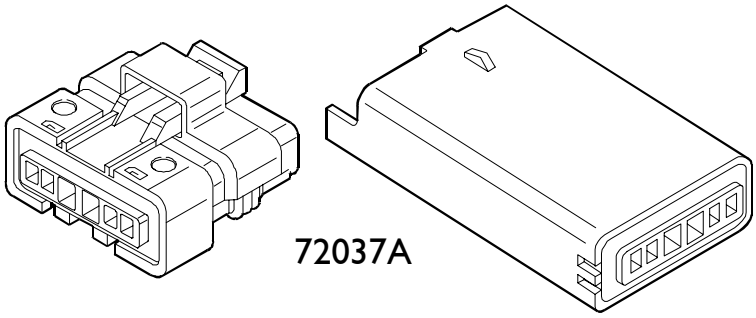

8592



8593

Ref.		Cable colour code	Function
72037A	1	8090	Supply (+15)
	2	8091	To pin 26 of electronic control unit for vehicle raising/lowering control
	3	1194	To 38-pin diagnostic connector (cell 15)
	4	7772	Supply (+30)
	5	8420	Suspension levelling control
	6	2294	To 38-pin diagnostic connector (cell 16)

Connection between cab/bonnet cable and self-levelling suspension cable

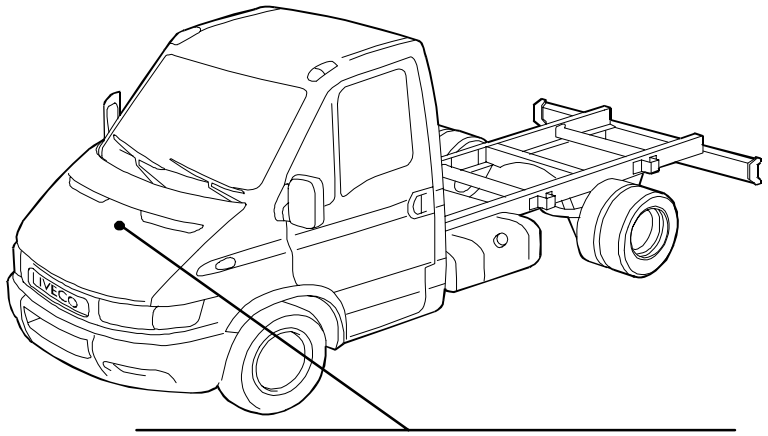

8587

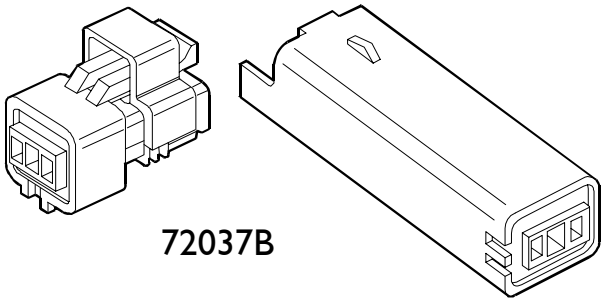

72037B

8612



8613

Ref.	Cable colour code	Function
1	6008	Self-levelling suspension system failure signal
72037B 2	5411	Tachometric signal
3	1363	Positive with vehicle stop signal switch engaged

Connection between cab/bonnet cable and total power takeoff cable

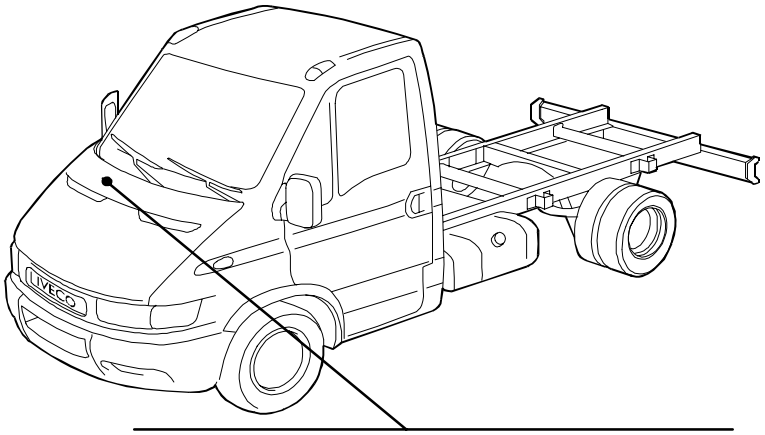

8587

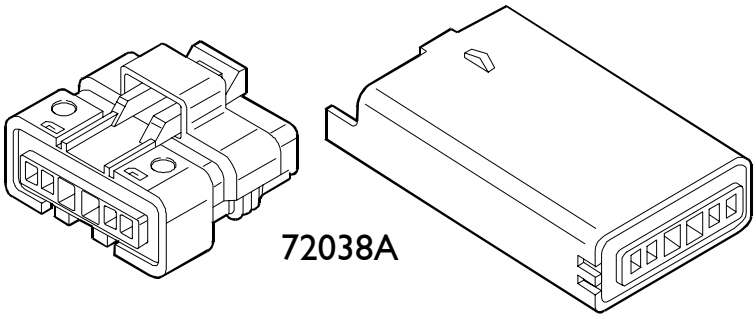

8592



8593

Ref.		Cable colour code	Function
72038A	1	9133	To electronic control unit for switching on total power takeoff (connector P2 cell 3)
	2	9134	To electronic control unit for switching on total power takeoff (connector P2 cell 4)
	3	9135	To electronic control unit for switching on total power takeoff (connector P2 cell 5)
	4	9136	To electronic control unit for switching on total power takeoff (connector P2 cell 6)
	5	0056	To electronic control unit for switching on total power takeoff (connector P2 cell 7)
	6	0057	To electronic control unit for switching on total power takeoff (connector P2 cell 8)

Connection between cab/bonnet cable and total power takeoff cable

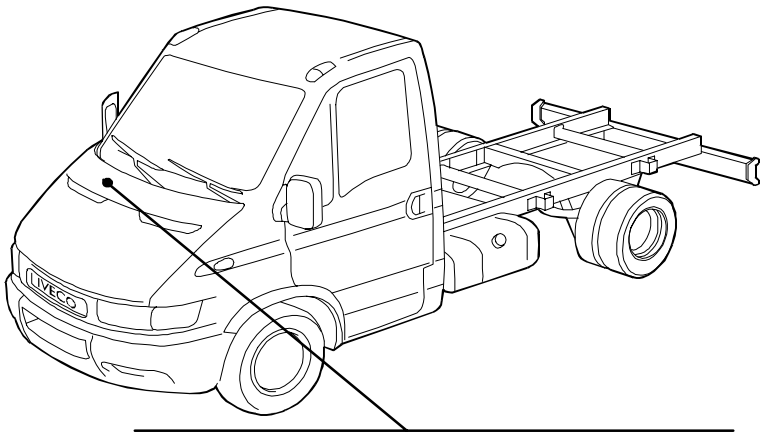

8587

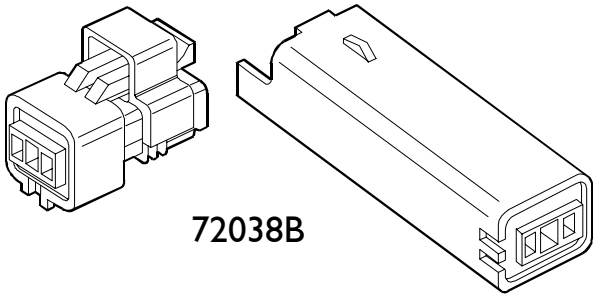

72038B

8612



8613

Ref.	Coble colour code	Function
1	9131	To switch for total power takeoff engaged signal
72038B 2	0000	Earth
3	-	Spare

Connection between cab/bonnet cable and antitheft cable

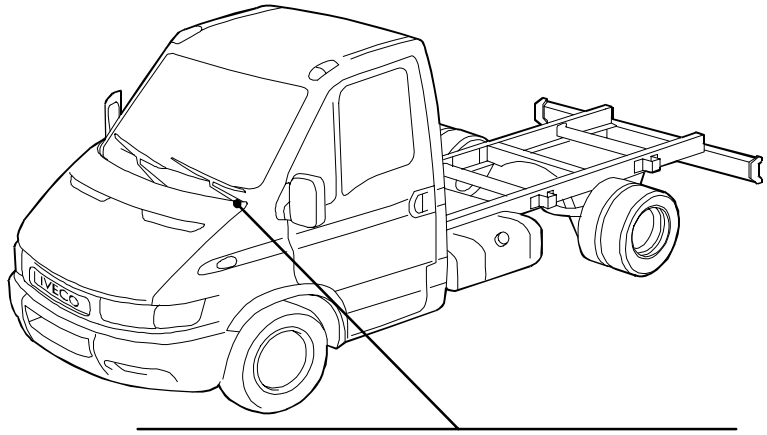

8587

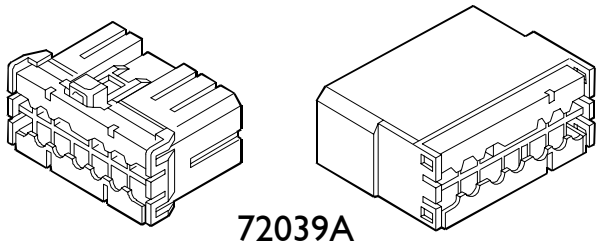

72039A

8608

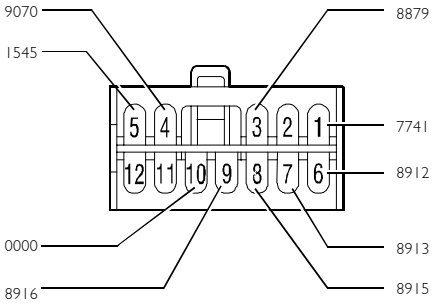

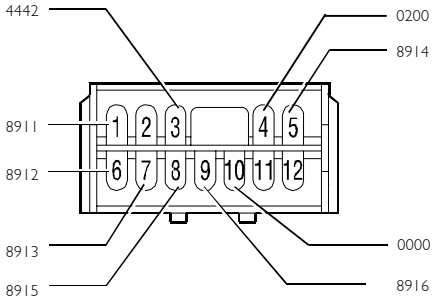

8609

Ref.		Cable colour code	Function
	1	7741-8911	Supply (+30)
	2	-	Spare
	3	8879-4442	Supply (+15)
	4	9070-0200	To switch for locking rear door (van)
	5	1545-8914	To volumetric sensor
72039A	6	8912	To volumetric sensor
	7	8913	To volumetric sensor
	8	8915	To volumetric sensor
	9	8916	To volumetric sensor
	10	0000	Earth
	11	-	Spare
	12	-	Spare

Connection between cab/bonnet cable and antitheft cable with central door locking

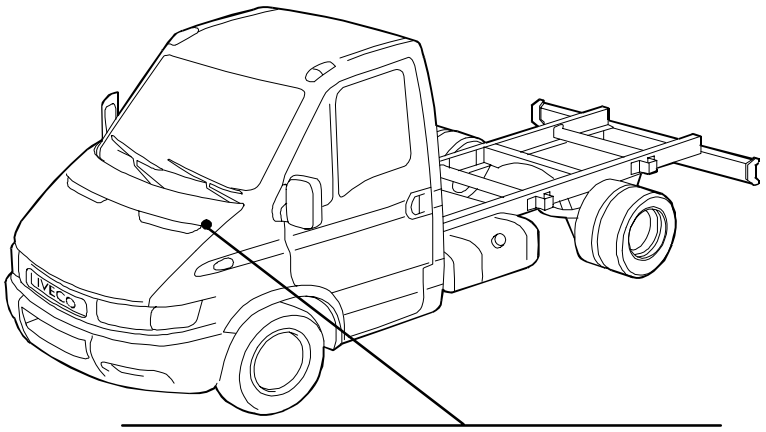

8587

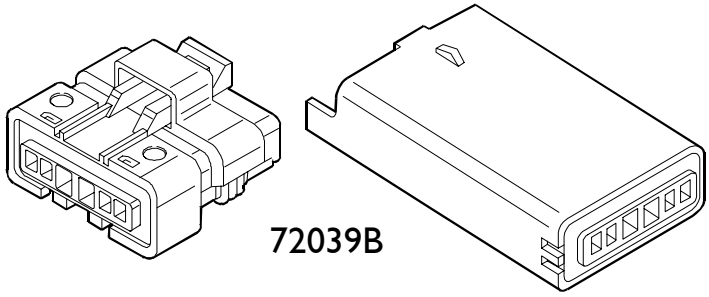

72039B

8592



8593

Ref.		Cable colour code	Function
72039B	1	8909-9140	Supply (+15)
	2	0000	Earth
	3	8910-9141	Supply (+30)
	4	-	Spare
	5	-	Spare
	6	9073-9142	To self-powered siren for alarm

Connection between cab/bonnet cable and right door cable

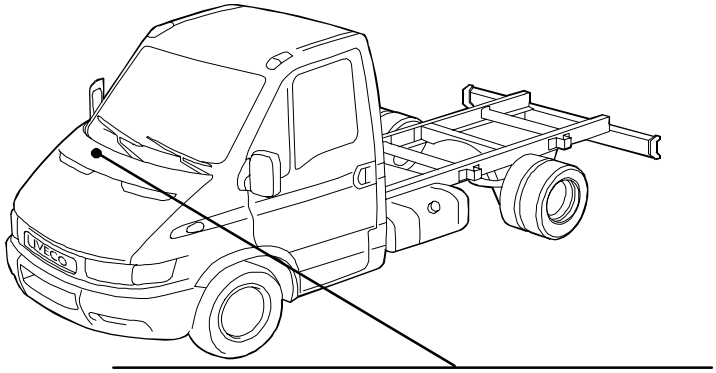

8587

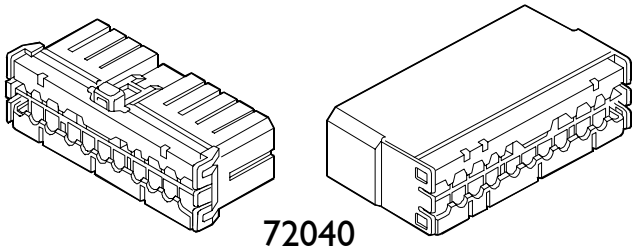

8614

72040

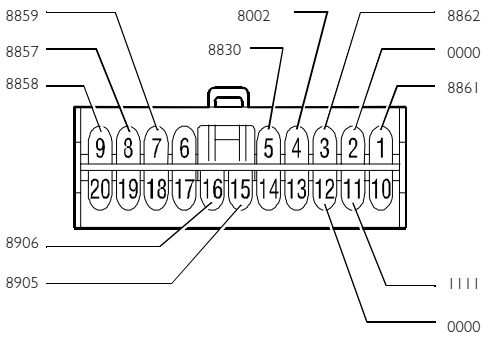

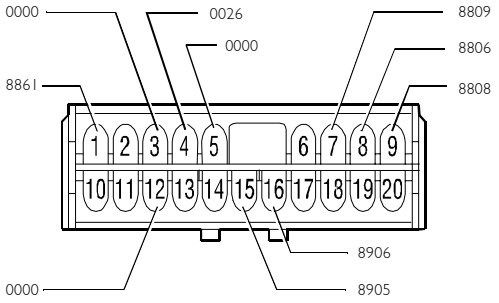

8615

Ref.	Cable colour code	Function
1	**8861**	Supply (+15/A)
2	**0000**	Earth
3	**8862-0000**	Connection between switches for passenger's door power window
4	**8002-0026**	Connection between switches for passenger's door power window
5	**8830**	Heated rear-view mirror
6	-	Spare
7	**8859-8809**	Electrically-operated aimable mirror
8	**8857-8806**	Electrically-operated aimable mirror
9	**8858-8808**	Electrically-operated aimable mirror
72040 10	-	Spare
11	**1111**	To connection between cab/bonnet cable and left door cable
12	**0000**	Earth
13	-	Spare
14	-	Spare
15	**8905**	To door closing control motor
16	**8906**	To door closing control motor
17	-	Spare
18	-	Spare
19	-	Spare
20	-	Spare

Connection between cab/bonnet cable and left door cable

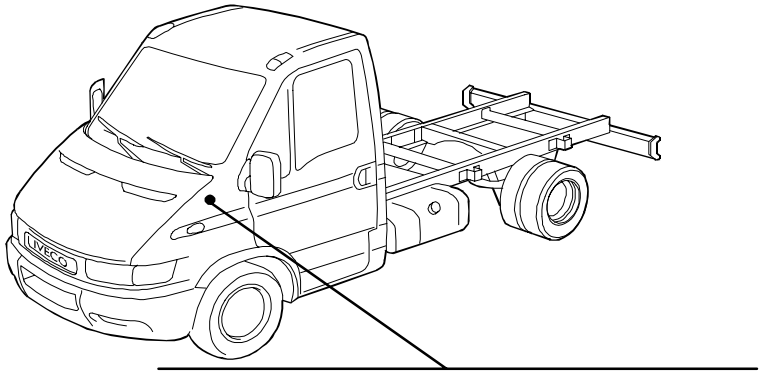

8587

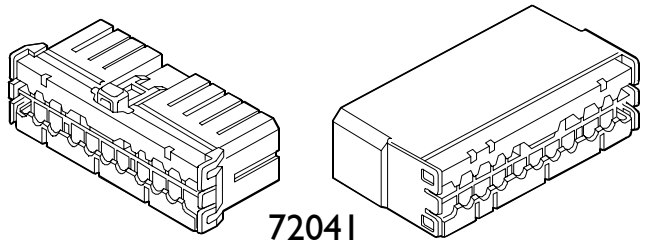

8614

72041

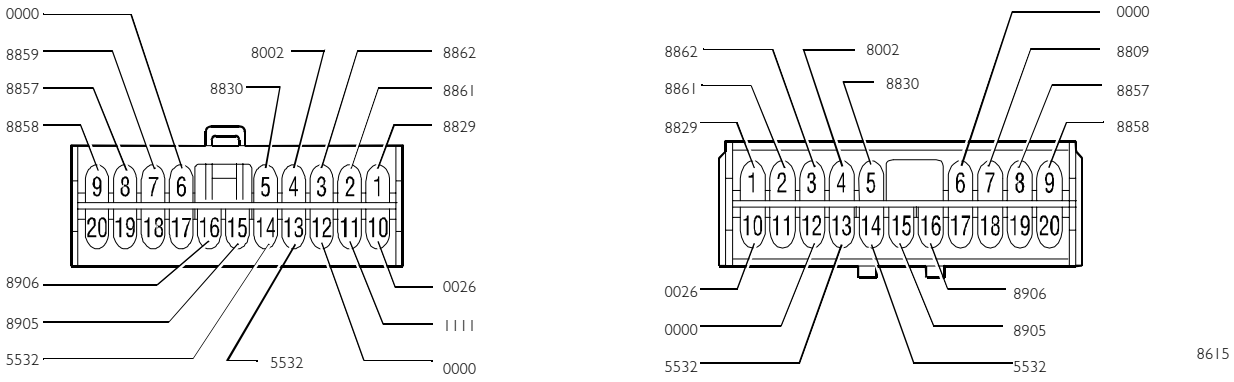

8615

Ref.		Cable colour code	Function
72041	1	8829	Supply (+15)
	2	8861	Supply (+15/A)
	3	8862	Connection between switches for passenger's door power window
	4	8002	Connection between switches for passenger's door power window
	5	8830	Heated rear-view mirror
	6	0000	Earth
	7	8859-8809	Electrically-operated aimable mirror
	8	8857	Electrically-operated aimable mirror
	9	8858	Electrically-operated aimable mirror
	10	0026	Earth
	11	1111	To connection between cab/bonnet cable and left door cable
	12	0000	Earth
	13	5532	To outside temperature sensor
	14	5532	To outside temperature sensor
	15	8905	To door closing control motor
	16	8906	To door closing control motor
	17	-	Spare
	18	-	Spare
	19	-	Spare
	20	-	Spare

Connection between cab roof lamp and left front clearance light cable

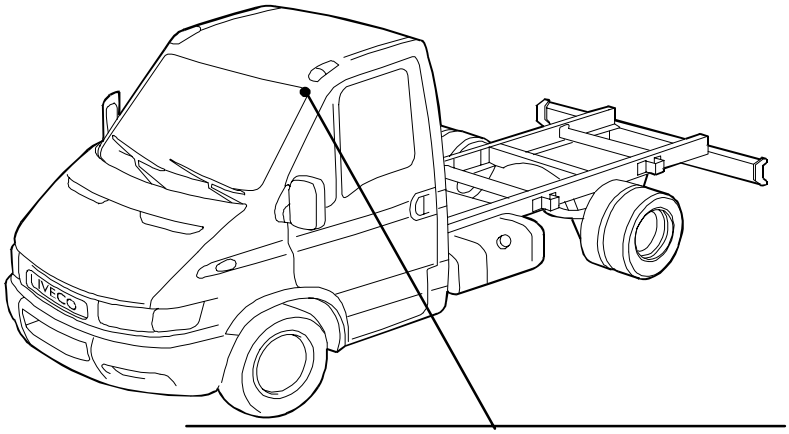

8587

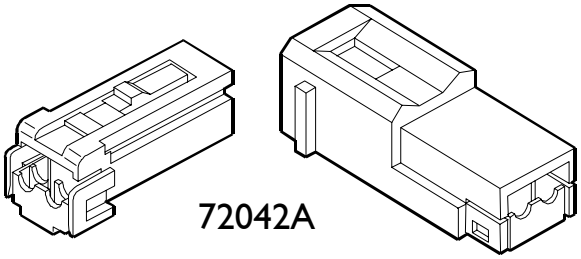

8616



8617

Ref.		Cable colour code	Function
72042A	1	0000	Earth
	2	3330	Front clearance light

Connection between cab roof lamp and right front clearance light cable

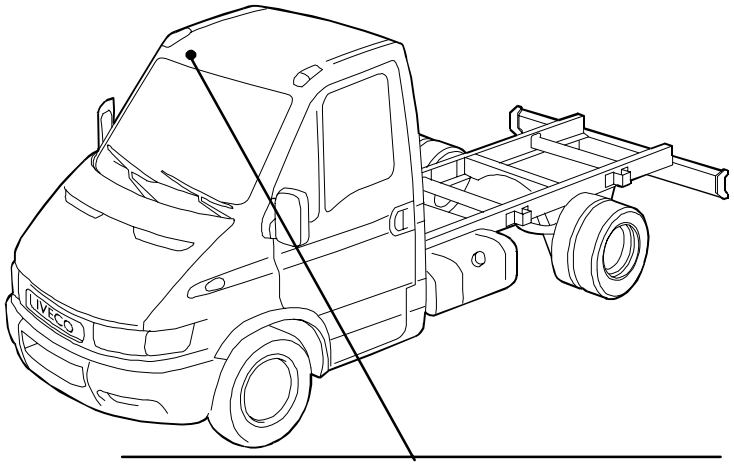

8587

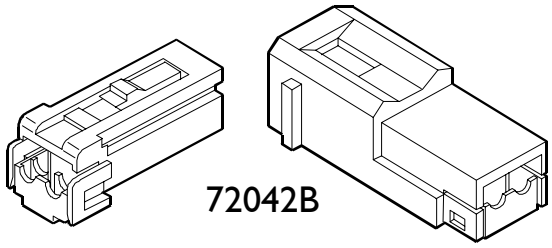

8616



8617

Ref.		Cable colour code	Function
72042B	1	0000	Earth
	2	3330	Front clearance light

Connection between cab/bonnet cable and fog lamp cable

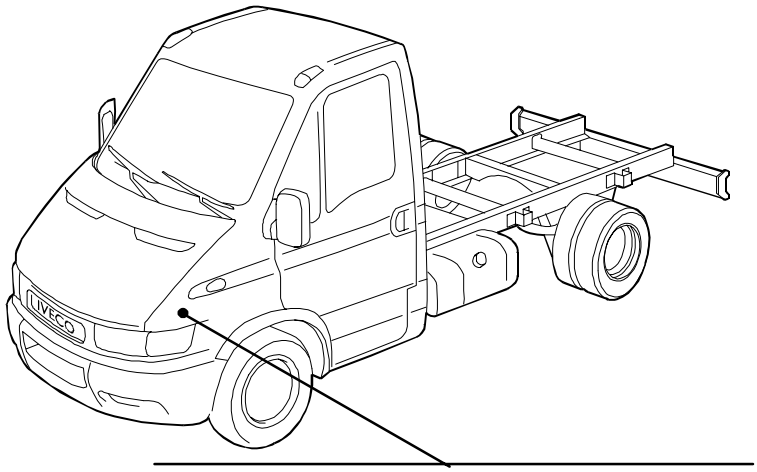

8587

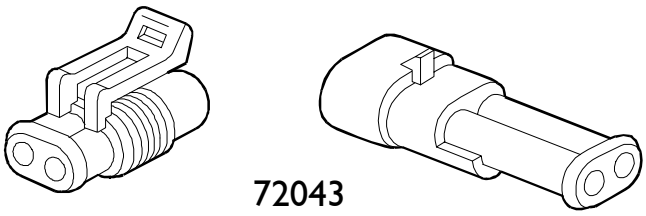

72043

8618



8619

Ref.		Cable colour code	Function
72043	1	0000	Earth
	2	2228	Fog lamps

Connection between right tail light cable and rear roof lamp cable

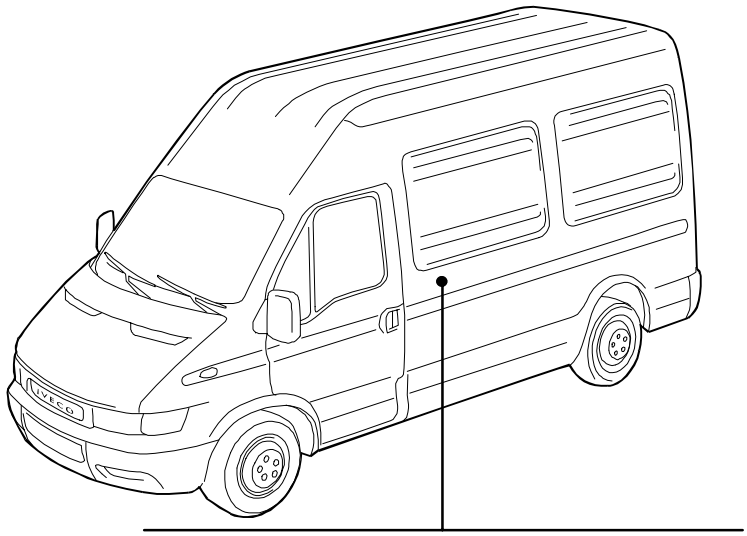

8597

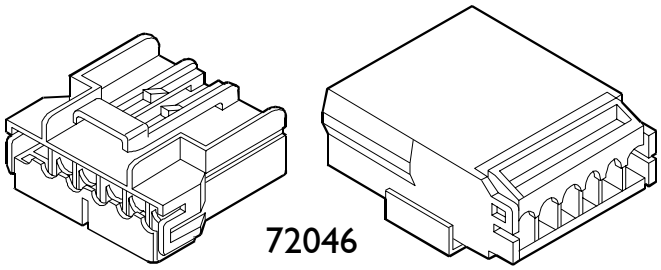

72046

8590



8591

Ref.		Cable colour code	Function
72046	1	0003	Switching on roof lamp
	2	4418	Supply (+30)
	3	0000	Earth
	4	1125	Positive with direction indicators/hazard warning lights on
	5	1172	Additional stop light
	6	0000	Earth

Connection between frame cable and side clearance lights cable

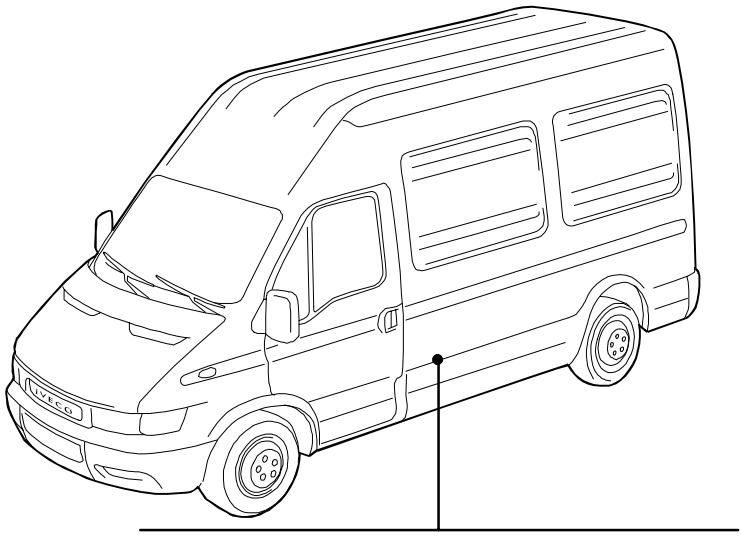

8597

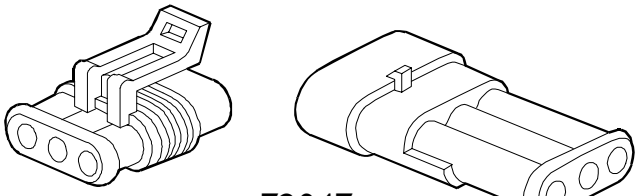

72047

8602



8603

Ref.		Cable colour code	Function
	1	0000	Earth
72047	2	3334	Vehicle right side clearance lights
	3	3335	Vehicle left side clearance lights

Connection between cab/bonnet cable and ABS cable

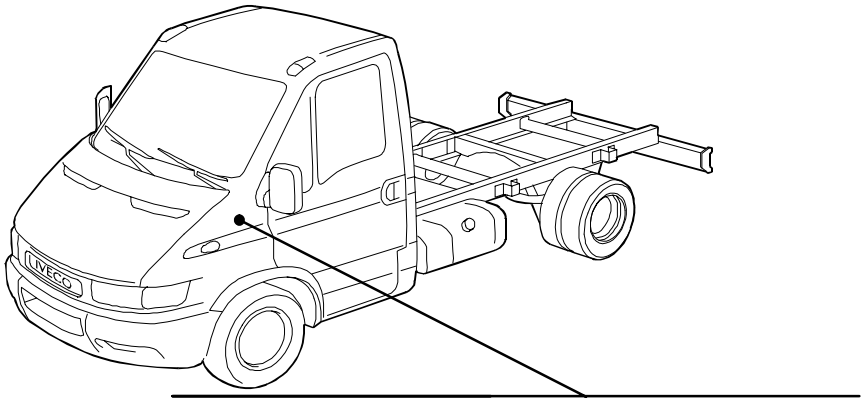

8587

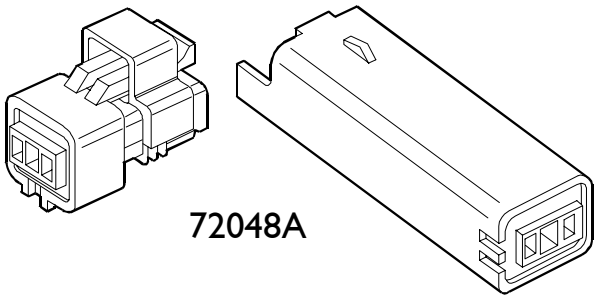

8612



8613

Ref.		Cable colour code	Function
72048A	1	2888-8817	To 38-pin diagnostic connector (cell 4)
	2	-	Spare
	3	1888-8818	To 38-pin diagnostic connector (cell 3)

Connection between cab/bonnet cable and ABS cable

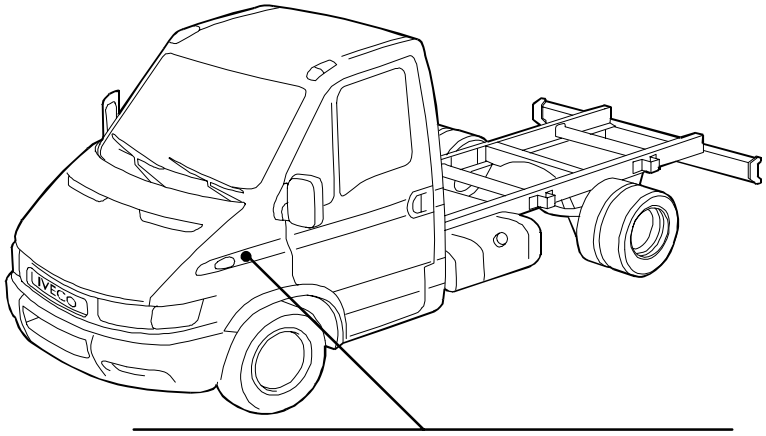

8587

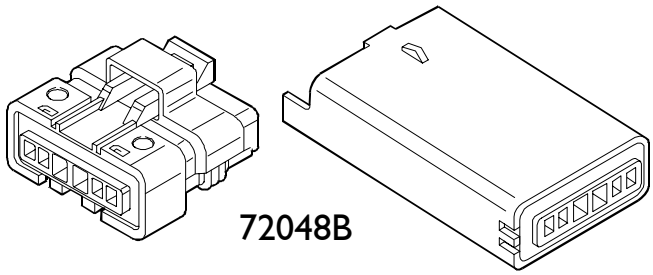

72048B

8592



8593

Ref.		Cable colour code	Function
72048B	1	8847	Supply (+15)
	2	1173	Positive with switch for vehicle stop engaged signal
	3	0315	Switching off retarder
	4	6005-6674	ABD device on signal
	5	6673	EBD device failure signal
	6	6670	ABS device failure signal

Connection between cab/bonnet cable and climate control system cable

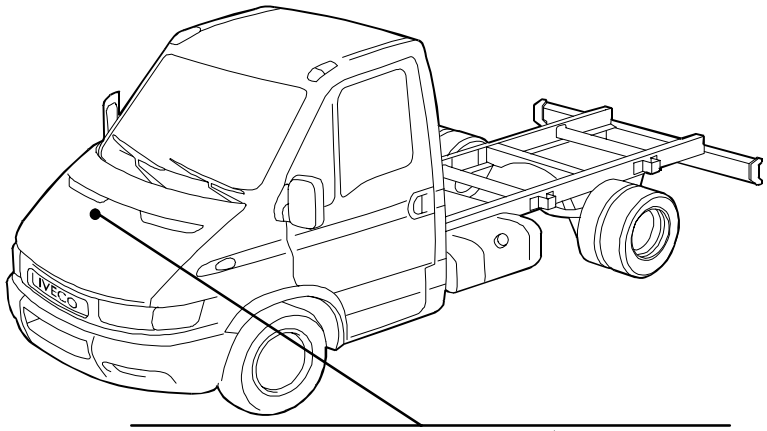

8587

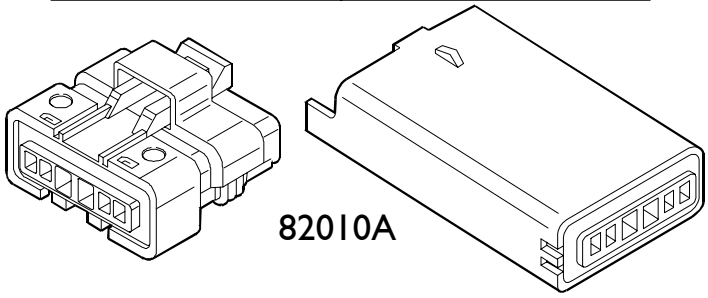

8592

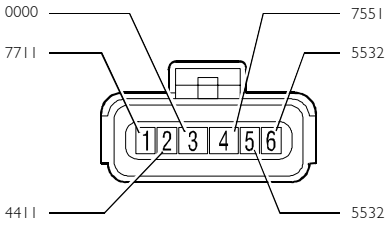

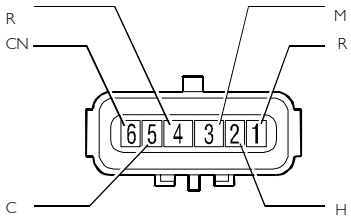

Ref.		Cable colour code	Function
82010A	1	7551-R	Supply (+30)
	2	4411-H	Positive with side lights on
	3	0000-M	Earth
	4	7711-R	Supply (+15/A)
	5	5532-C	Outside temperature detection
	6	5532-CN	Outside temperature detection

Connection between cab/bonnet cable and climate control system cable

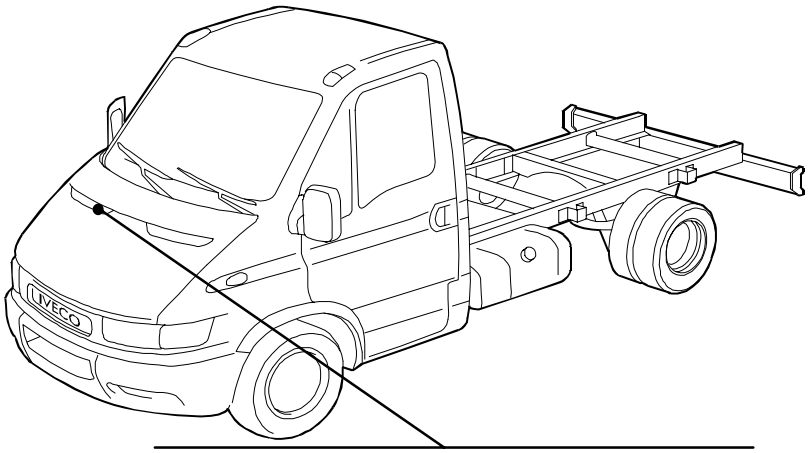

8587

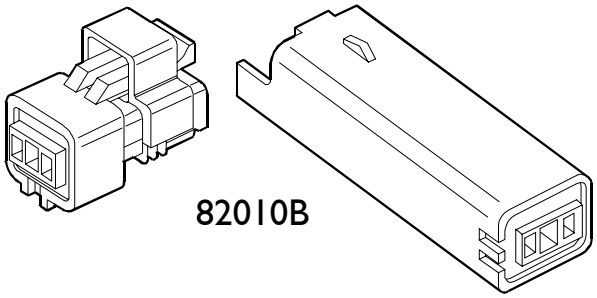

8612



8613

Ref.		Cable colour code	Function
82010B	1	8163-L	To set of 3 switches for coolant fluid pressure signal
	2	-	Spare
	3	5532-G	To instrument cluster with warning lights (connector B pin 11)

Connection between cab/bonnet cable and climate control system cable

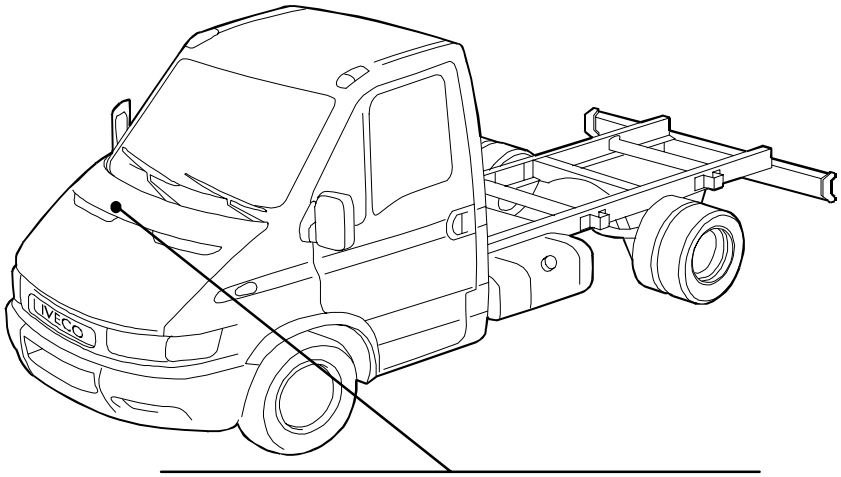

8587

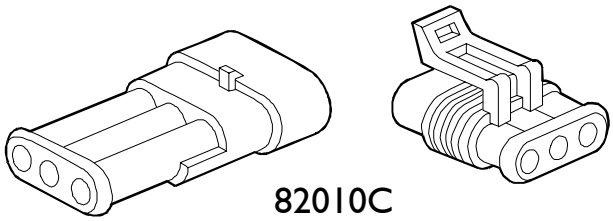

82010C

8604



8605

Ref.		Cable colour code	Function
82010C	1	1196	To 38-pin diagnostic connector (cell 13)
	2	—	Spare
	3	2296	To 38-pin diagnostic connector (cell 14)

VENDOR-DERIVED BUS VERSION

General Information

Within this handbook, school-buses are included in the Bus version. If compared to other vehicles, Buses are provided with different interior lighting harness.

The TGC switch position on dashboard panel is shown in the Push-button location figure II.4 while the main switch is located in the engine compartment near the oil filter (fig. II.5). To turn the TGC off, turn the ignition key-switch to STOP and turn off the general safety switch 52029 fig. II.6 ref. 1, on the left of the steering wheel.

A perspective view of the interior lighting harness is provided in fig. II.7.

Figure II.6 shows the fan control switch.

Chapter IV page 156 shows a section of the rotary translating door.

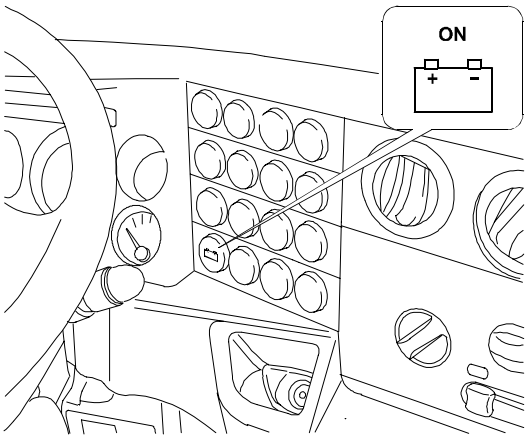

73728

II.4 TGC CONTROL SWITCH

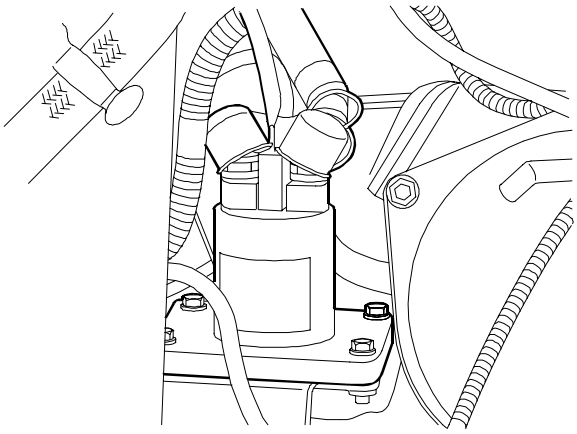

73717

II.5 VOLTAGE MAINS REMOTE SWITCH

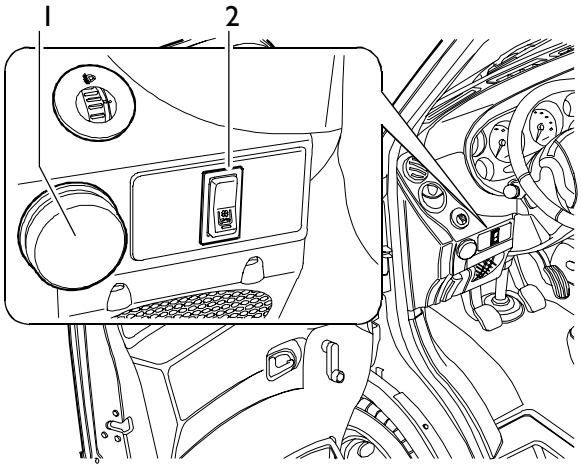

73712

II.6 **1.** GENERAL SAFETY SWITCH – **2.** FAN CONTROL SWITCH

Perspective view of Vendor-derived Bus version interior lighting harness

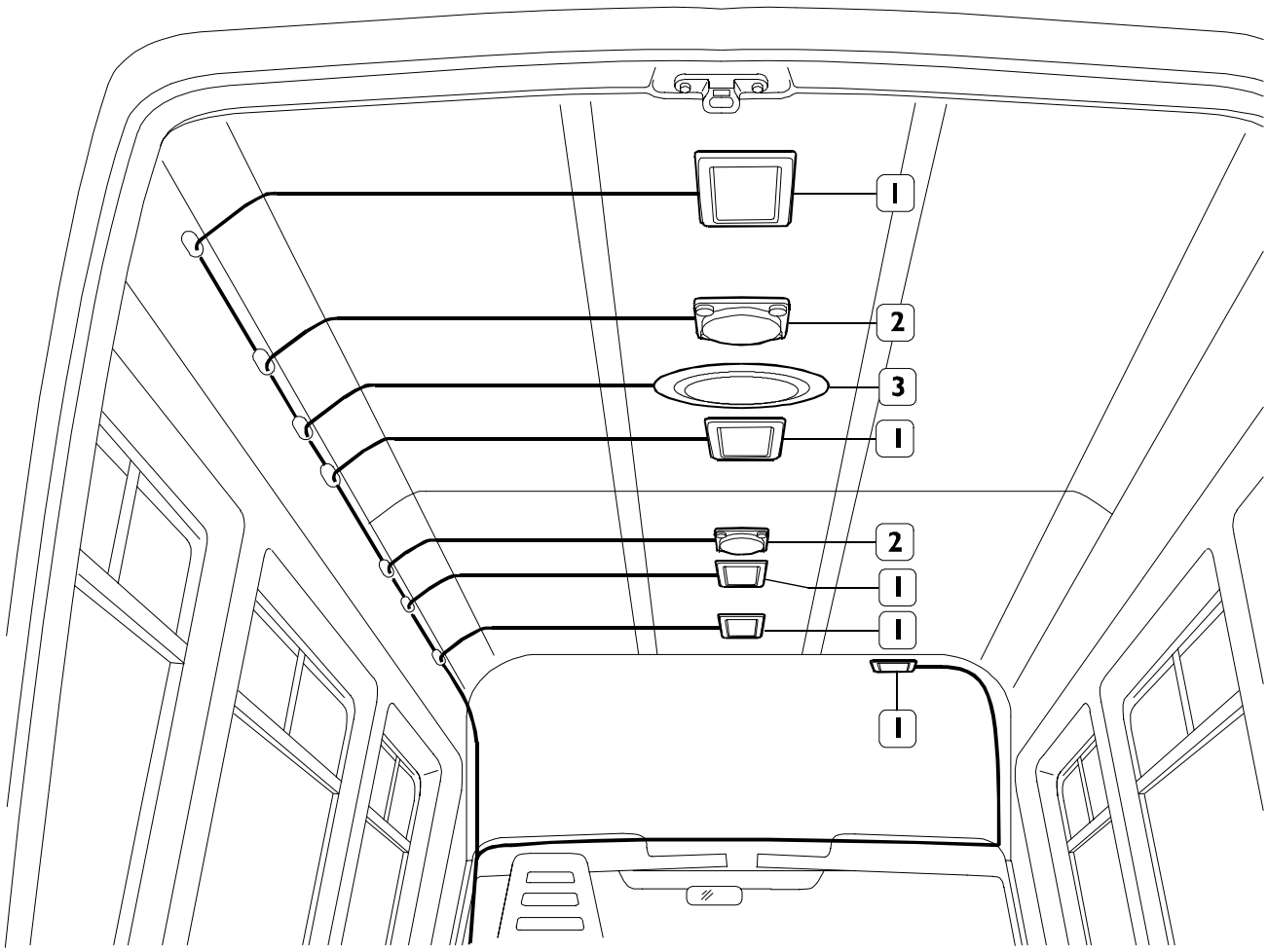

73716

II.7 **1.** INTERIOR LIGHTING - **2.** DRIVER LOUDSPEAKER PROVISIONS - **3.** FAN

DIAGNOSTIC CONNECTOR

Near the positive terminal of the battery there is a diagnostic connector (Fig. II.8). It is fastened by 2 screws to a special bracket fitted on the body and access to it is gained by unscrewing the protective cap; suitably connected to the diagnostic system (IWT, MODUS), it allows quick identification of the cause of faults in the various electronic devices.

The diagnosis connector on F1A engine vehicles is located on the conveyor unit lower party on the passenger side.

The table on the following page shows the correspondence between the various electronic systems and the connector pins referring to them.

NB The connector shown in Fig. II.9 is seen from the pin side.

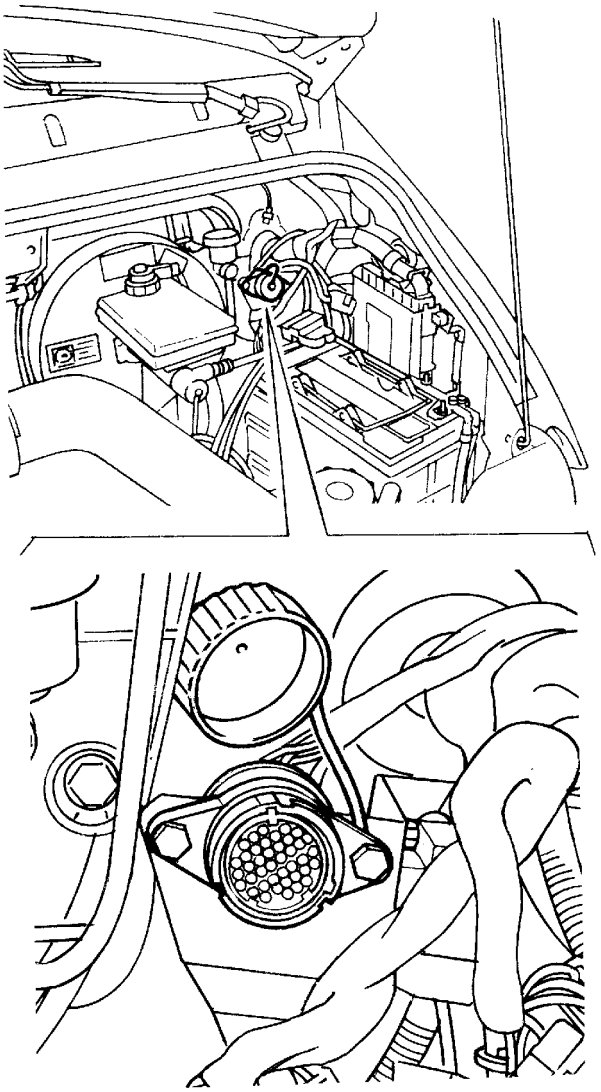

8620

II.8 38-PIN DIAGNOSTIC CONNECTOR

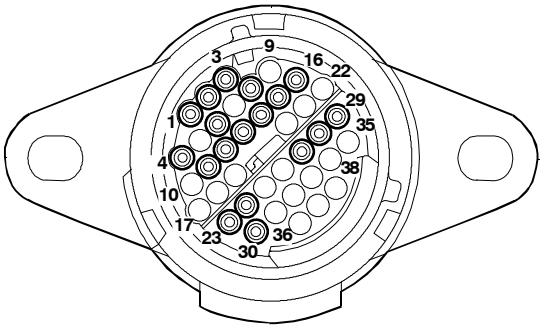

8621

II.9 DENTIFICATION OF THE PINS OF THE 38-PIN DIAGNOSTIC CONNECTOR

Diagnostic connector pin description table

System	Pin	Function
EDC/EGR/Methane	1 2	L K
ABS/EBD/ABD	3 4	L K
Air Bag/Retarder	6	K
Tachometer (connector A cell 2 instrument cluster)	8	K
Supply +15/A services	11	Input
Immobilizer/Central door locking/Alarm	12	K
Climate control system	13 14	L K
Self-levelling suspension	15 16	L K
Engine timing signal (connector B pin 28 EDC control unit) Engine timing earth (battery -)	23 24	- Screening
Supply +30	27	Battery +V
Engine rpm	28	RPM
Vehicle speed	29	-
Earth	30	-

COMMON COMPONENTS

Page

RELAY AND FUSE HOLDER SUPPORT 3
- ❑ Identification of fuses 4
- ❑ Identification of relays/diode holders 5

OPTICAL INDICATORS 6
- ❑ Interface bride with the new tool with 32-way connectors 7

INSTRUMENT CLUSTER 8
- ❑ Warning lights assembly 8
- ❑ Instrument assembly 9
- ❑ Connector assembly (cable input side view) 11

SWITCH ASSEMBLY 15

STALK UNIT 17
- ❑ Functions 19
- ❑ Cruise Control 21

RELAY AND FUSE HOLDER SUPPORT

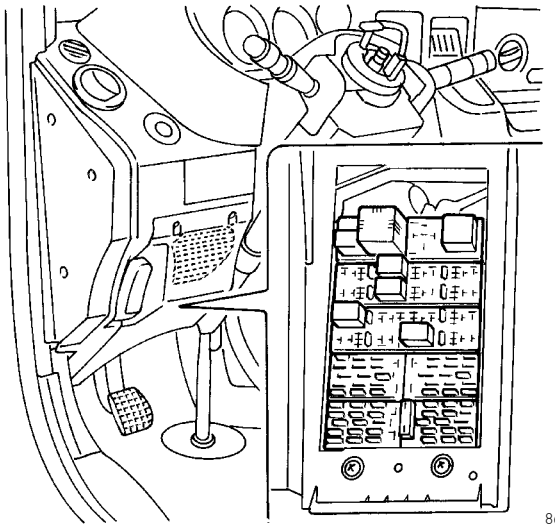

8631

III.1

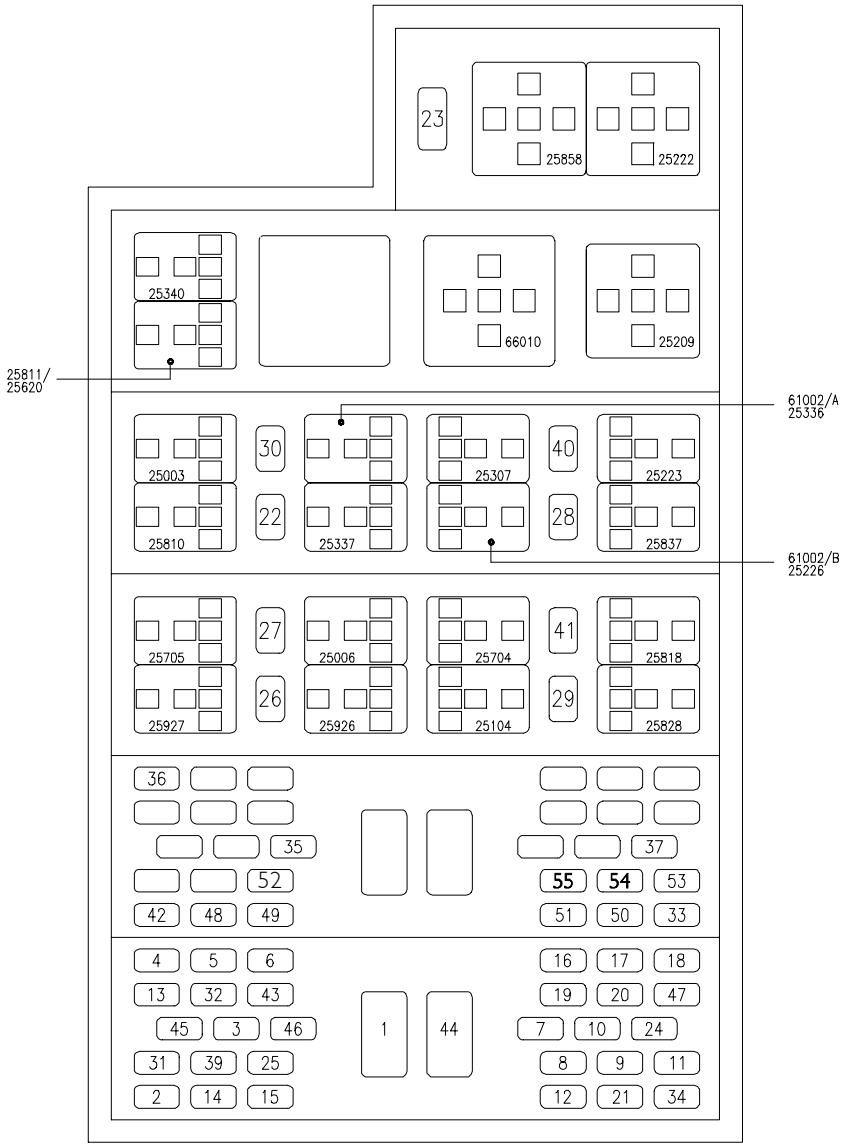

III.2

Identification of fuses

N.	Functions		Engine							
			UNIJET (.13 - .15)		UNIJET FIA (.10 - .12)		ID/TCA (.11)		PC/NA (.9)	
			Std.	Optional	Std.	Optional	Std.	Optional	Std.	Optional
1.	Thermal starter	40	–	–			X		Not foreseen	
1.	Thermal starter	80	X				–		Not foreseen	
1.	Thermal starter, additional heater	30			X		–			
2.	Immobilizer/Warming/EDC	5	X		X		X		X	
3.	DDS device	5	Not foreseen		Not foreseen		X		X	
4.	Instrument cluster (+30)	5	X		X		X		X	
5.	Instrument cluster (+15)	5	X		X		X		X	
6.	Stalk unit (rear fog guard, flasher)	5	X		X		X		X	
7.	Stalk unit (low beams)	10	X		X		X		X	
8.	Stalk unit (high beams)	15	X		X		X		X	
9.	Stalk unit (side lights)	15	X		X		X		X	
10.	Windscreen wiper	15	X		X		X		X	
11.	Stalk unit (direction indicators/hazard warning lights)	15	X		X		X		X	
12.	Stalk unit (horns)	15	X		X		X		X	
13.	Reversing light	5	X		X		X		X	
14.	Side light, clearance, no. plate light	5	X		X		X		X	
15.	Side light cluster lighting	5	X		X		X		X	
16.	Left low beam headlamp	10	X		X		X		X	
17.	Right low beam headlamp	10	X		X		X		X	
18.	Left high beam headlamp	10	X		X		X		X	
19.	Right high beam headlamp/headlamp aming	10	X		X		X		X	
20.	Interior lighting/radio/cigar lighter	10	X		X		X		X	
20.	Interior lighting/radio	10			X					
21.	Electric windscreen defrosting unit	30	X				X		X	
21.	Cigar lighter	15			X		-			
22.	Heated fuel filter	15	X		X			X		X
23.	EDC electronic control unit	25	X		X		Not foreseen		Not foreseen	
24.	EDC	10	X		X		Not foreseen		Not foreseen	
25.	Stop lights	5	X		X		X		X	
26.	13-pin current socket	15		X		X		X		X
27.	13-pin current socket	15		X		X		X		X
28.	13-pin current socket	10		X		X		X		X
29.	38-pin diagnostic connector	5	X		X		X		X	
30.	Fog lamps	10		X	X			X		X
31.	Climate control, additional heater, engine cooling	5	X				X			X
31.	Compressor, timer, engine fan	10			X		-			
32.	Climate control	5		X		X		X		X
33.	Additional heater	20		X		X		X		X
34.	Headlamp washer	20		X		X		X		X
35.	Rear differential lock	5		X		X		X		X
36.	ABS, EBD, ABD failure warning light	5		X		X		X		X
37.	ABS	5		X		X		X		X
39.	Heated mirrors	10		X				X		X
39.	Heated mirrors, heated rear-screen, heated windscreen	10				X	-			
40.	Power windows	30		X				X		X
40.	Power windows (left)	20				X	-			
41.	Heated rear-screen, heated windscreen	10/ 20		X				X		X
42.	Self-levelling suspensions (Wabco)	5		X		X		X		X
43.	Air bag failure warning light	5		X		X		X		X
44.	Self-levelling suspensions (Wabco)	40		X		X		X		X
45.	Air-bag	5		X		X		X		X
46.	Solenoid valve for thermal starter	5	X				Not foreseen		Not foreseen	
46.	Power windows (right)	20				X	-			
47.	Electric fuel pump	10	X		X		Not foreseen		Not foreseen	
48.	Door locking/alarm	30		X		X		X		X
49.	Door locking/alarm	5		X		X		X		X
50.	Rear differential lock	30		X		X		X		X

51.	Total power takeoff	**10**		X		X		X		X
52.	Front differential lock (4x4)	**30**	X		X		X		X	
53.	Self-levelling suspensions Techniek)	**30**		X		X		X		X
54.	Electric hatch (van and 6+1)	**15**		X		X		X		X
55.	Rototranslating door	**15**		X		X		X		X

Identification of relays/diode holders

Code	Function	Engines							
		UNIJET				ID/TCA (.11)		PC/NA (.9)	
		(.13 - .15)		(F1A)					
		Std.	Optional	Std.	Optional	Std.	Optional	Std.	Optional
25035	Switching on external lights	X		X		X		X	
25003	Switching on fog lamps		X		X		X		X
25006	Switching on stop lights	X		X		Not foreseen		Not foreseen	
25704	Total power takeoff engagement control	X		X		Not foreseen		Not foreseen	
25104	Switching off Retarder with ABS on		X		X		X		X
25209	Loads cut-off during starting	X		X		X		X	
25222	Thermal starter engagement enable	X		Not foreseen		Not foreseen		Not foreseen	
25223	Thermal starter fan control	X		Not foreseen		Not foreseen		Not foreseen	
25307	Climate control compressor engagement		X	-	X		X		X
25336	Engine cooling	X		X		Not foreseen		Not foreseen	
25337	Climate control compressor disengagement		X		X	X		X	
25340	Compressor on signal		X		X	Not foreseen		Not foreseen	
25620	Fuel filter clogged signal	X		X		Not foreseen		Not foreseen	
25705	Diagnostics enable	X		X		X		X	
25810	Heated fuel filter circuit control	X		X			X		X
25811	Advance variator control (KSB)	Not foreseen		Not foreseen		X		X	
25818	Heated windscreen switching on		X		X		X		X
25837	Electric fuel pump switching on	X		X		Not foreseen		Not foreseen	
25858	EDC switching on	X		X		Not foreseen		Not foreseen	
25926	Suspension raising enable		X		X		X		X
25927	Suspension lowering enable		X		X		X		X
25928	Rear-screen heating switching on		X		X		X		X
61002A	Anti-return from Trinary	Not foreseen		Not foreseen		X		X	
61002B	Anti-return from TGC (bus)	X		X		X		X	
66010	Timer for headlamp washer		X		X		X		X



Fuse 39 must be replaced with a 10A fuse if the following optionals are present on the vehicle at the same time:

- heated wing mirrors with heated driver's seat;
- heated wing mirrors with heated driver's and passenger's seat;
- heated wing mirrors with electric aiming with heated driver's seat;
- heated wing mirrors with electric aiming with heated driver's and passenger's seat.

Fuse 41(39 for F1A) must be replaced with a 15A fuse if the following optionals are present on the vehicle at the same time:

- heated windscreen with heated rear-screen.

Fuse 55 must be replaced with a 15A fuse if both the seats are heated.

Fuse 70060 (40A) relating to the ABS, device is located in the engine compartment, near the control box.

For the F1A, plug preheat centre 25231is located on the engine compartment to the right of the EDC centre and is powered by 60A fuse 70064.

OPTICAL INDICATORS

The following table shows the 58918 pin out of the previous version (1) and the current one (2).

1	2	1	2	1	2
D6	B5	* B15	A2	B3	B156
C20	A5	B2	A17	B1	A22
B17	A29	B12	A18	B10	A21
B16	A14	C8	A4	C5	B26
B6	A30	* B4	A3	A1	A23
B8	A32	* B14	A19	C4	B24
B9	A16	A2	A6	A3	A7
B20	A15	C18	B14	C13	B27
C19	B13	A8	A11	C3	B25
C10	B15	D3	B29	B11	B2
A4	A8	B19	A13	C14	B1
A10	A9	D9	B30	C9	B23
A9	A10	D12	B9		
A11	A24	B18	A12		
A12	A25	C11	B11		
A5	A26	C15	B22	1	2
D8	B3	C12	B21	* B4	A19
D4	B4	D1	B6	* B14	A2
C1	B12	A6	A27	* B15	A3
D11	B10	D10	B8	* Variant for versions .11/.13/.15.	
B5	A20	D2	B7		
B13	A1	D5	B31		
C6	B18	C2	B32		
C7	B20	A7	A28		
C16	B19	B7	A31		
C17	B17	D7	B28		

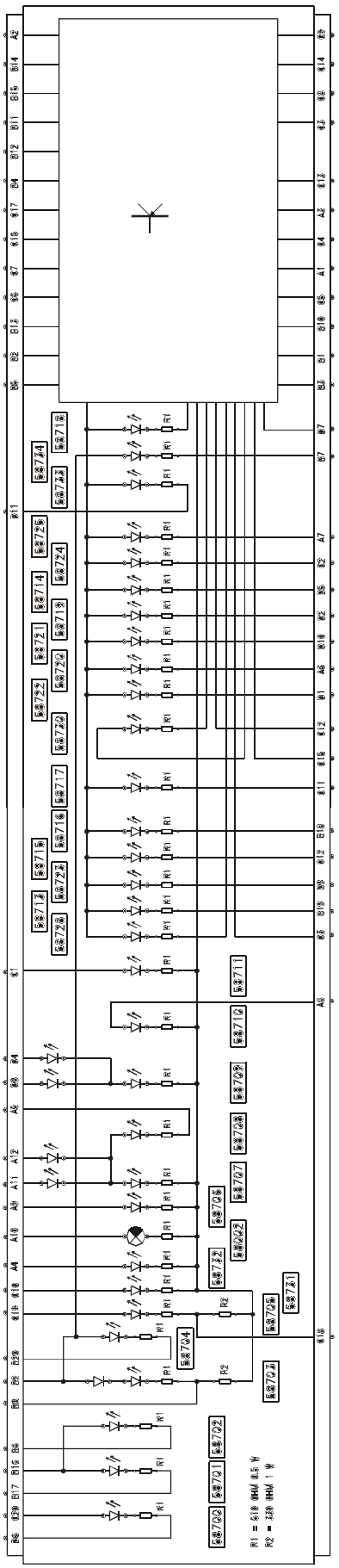

III.3 058918 PIN OUT OF THE PREVIOUS VERSION

Interface bride with the new tool with 32-way connectors

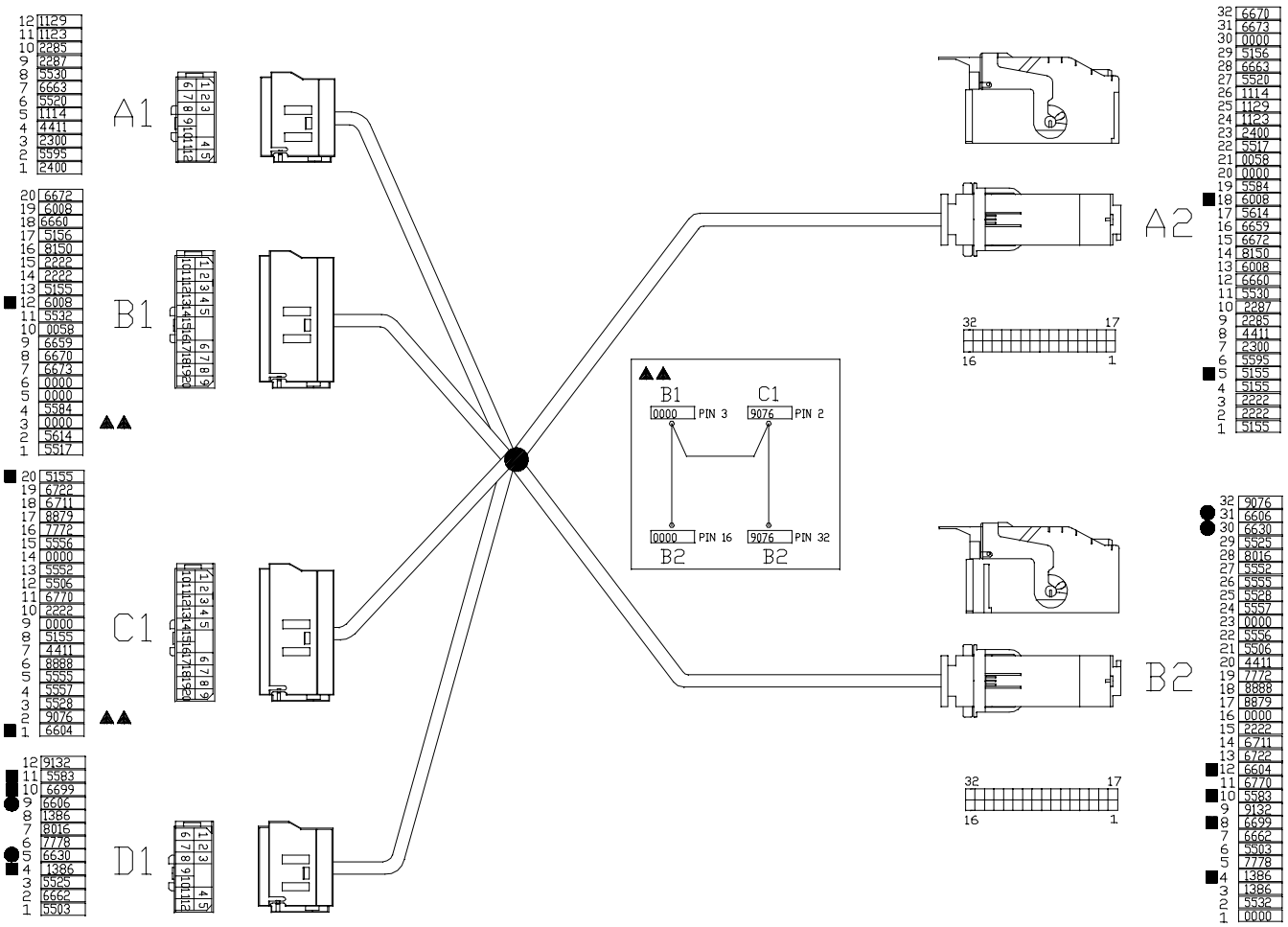

77025

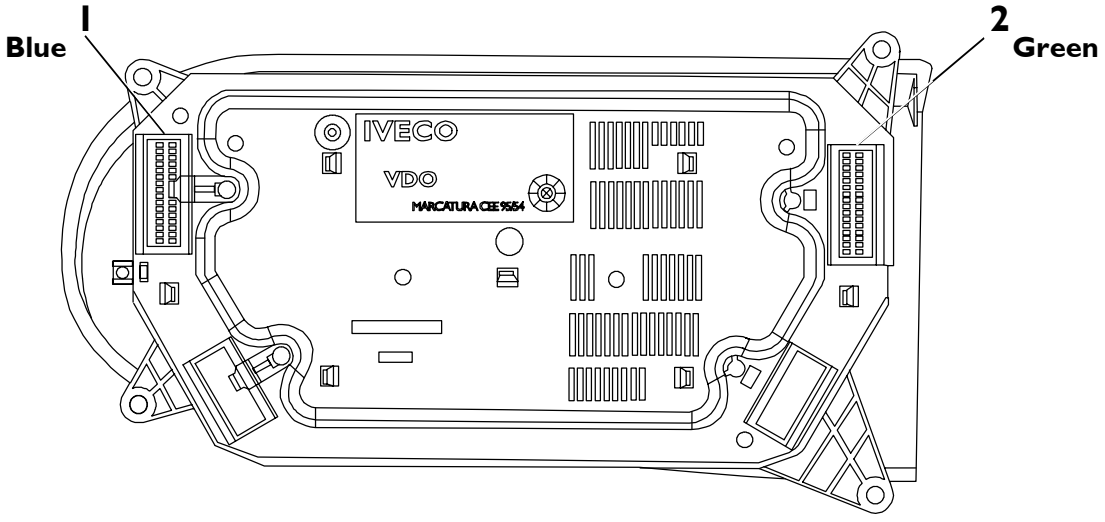

0742528t

III.4 REAR VIEW OF 32-WAY CONNECTOR UNIT
1. BLUE COLOUR 0SEAT "A" FOR 32-WAY FEMALE HOLDER CONNECTOR COMPLETE WITH TERMINALS
2. BLUE COLOUR 0SEAT "B" FOR 32-WAY FEMALE HOLDER CONNECTOR COMPLETE WITH TERMINALS

INSTRUMENT CLUSTER

58918

Warning lights assembly

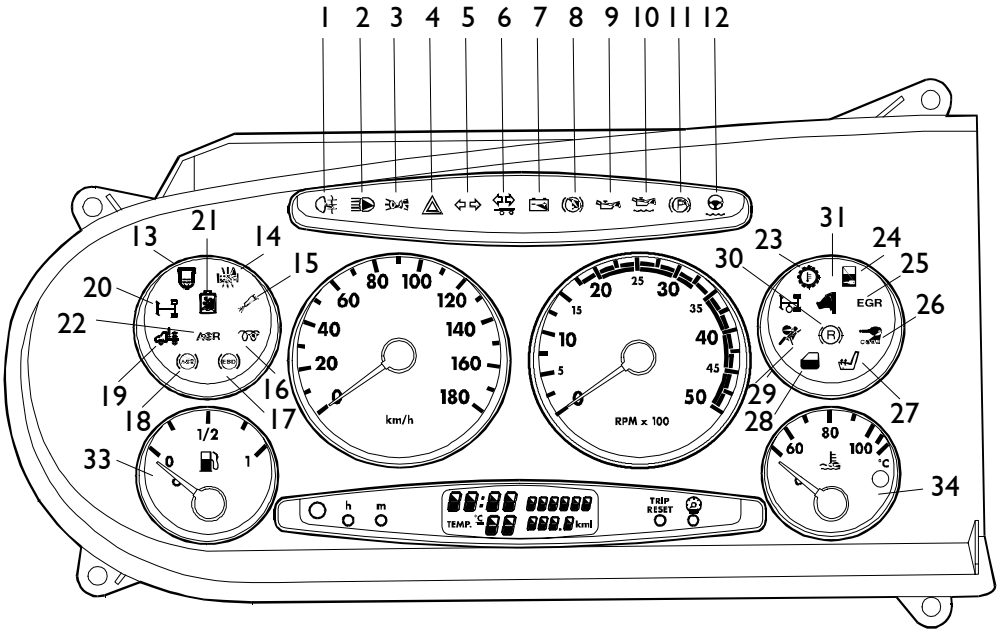

8655

Ref.	Component code	Description
1	58706	Rear fog guard
2	58002	High beam headlamps
3	58732	Side lights
4	58708	Hazard warning lights
5	58707	Tractor direction indicators
6	58709	Trailer direction indicators
7	58700	No battery charge
8	58718	Brake system failure (under TEST)
9	58722	Low engine oil pressure
10	58730	Low engine oil pressure (under TEST)
11	58719	Handbrake on (under TEST)
12	58728	Low power steering fluid level (under TEST)
13	58710	Water in fuel filter (under TEST)
14	58725	Air cleaner clogged (under TEST)
15	58701	EDC failure
16	58702	Engine warming
17	58734	EBD failure
18	58703	ABS failure
19	58713	ECAS failure
20	58735	Rear transversal differential lock
21	58720	Low engine coolant fluid level (under TEST)
22	58704	ABD on
23	58721	High gearbox oil temperature (under TEST)
24	58723	Emergency handle lock (under TEST)
25	58733	EGR failure
26	58717	Immobilizer engaged
27	58731	Seat heating
28	58724	Door open indicator
29	58705	Airbag failure
30	58715	Total power takeoff (PTO) on
31	58714	Emergency handle activated (under TEST)
32	58711	Retarder on
33	44031	Low fuel level (under TEST)
34	47207	High engine coolant fluid temperature (under TEST)

Instrument assembly

Front view

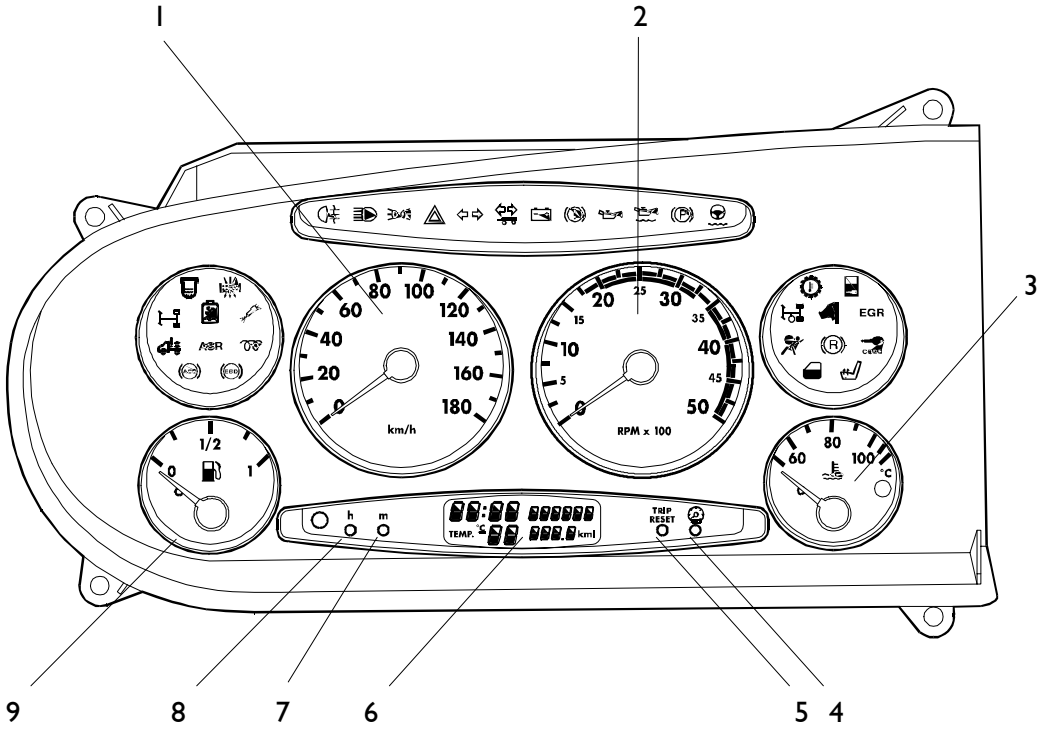

8655

Ref.	Description
1	Electronic tachometer
2	Electronic gyrometer
3	Engine coolant fluid temperature gauge with incorporated warning light
4	Instrument lighting adjustment button
5	Trip meter reset button
6	Display for: clock, outside temperature (only with climate control), total odometer (km), trip meter (km)
7	Clock adjustment button (minutes)
8	Clock adjustment button (hours)
9	Fuel level gauge with reserve warning light

Rear view

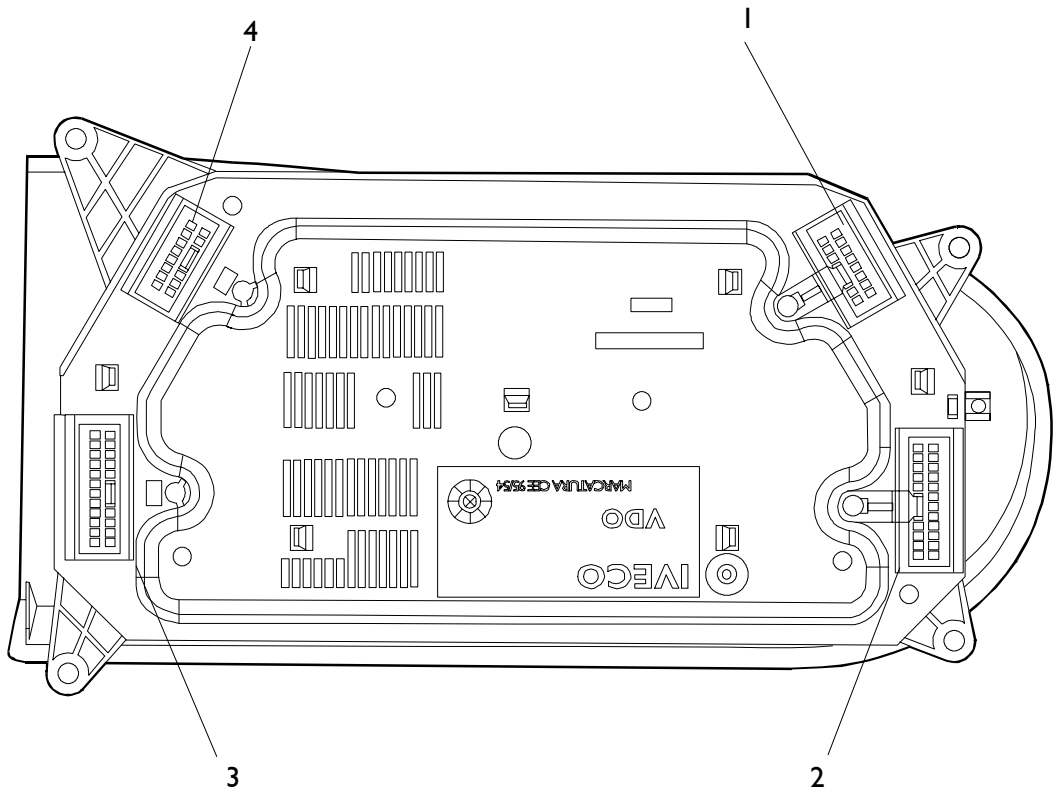

8643

Ref.	Description
1	Seat "A" for 12-way, blue, female holder connector complete with terminal
2	Seat "B" for 20-way, blue, female holder connector complete with terminal
3	Seat "C" for 20-way, black, female holder connector complete with terminal
4	Seat "D" for 12-way, black, female holder connector complete with terminal

Connector assembly (cable input side view)

Connector A

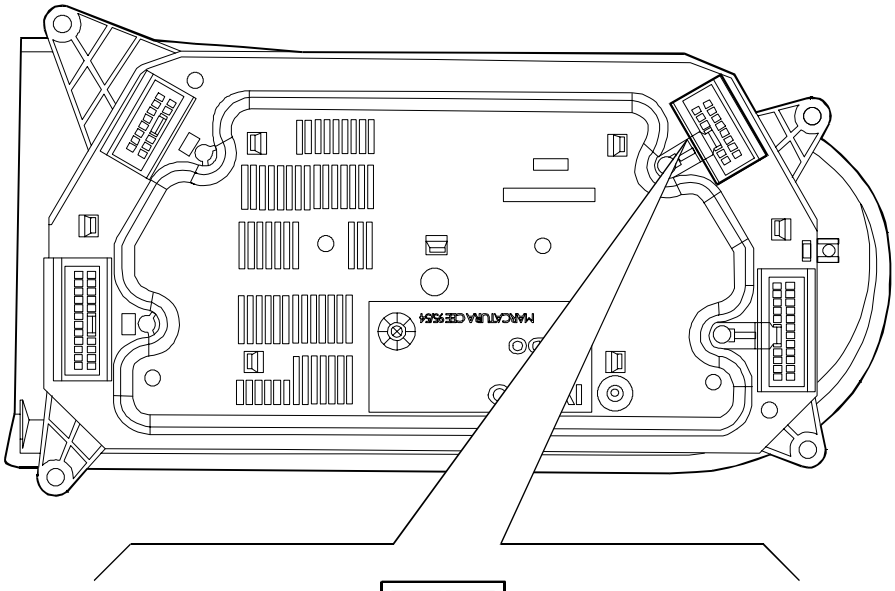

8643

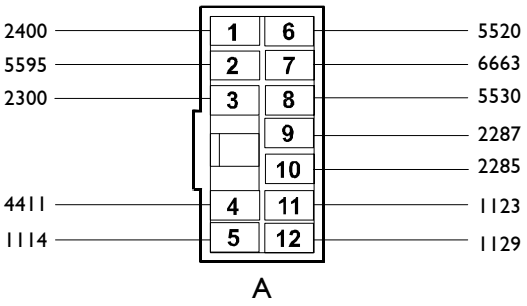

8644

Ref.		Cable colour code	Function
A	1	2400	Tachograph failure warning light
	2	5595	To cell 8 of diagnostic connector (serial line K)
	3	2300	Speed indication from tachograph
	4	4411	Side lights on warning light
	5	1114	Hazard warning lights on warning light
	6	5520	Low engine coolant fluid level warning light
	7	6663	Air cleaner clogged warning light
	8	5530	Water in fuel oil filter warning light
	9	2287	Rear fog guard on warning light
	10	2285	High beam headlamps on warning light
	11	1123	Direction indicators on warning light
	12	1129	Direction indicators on warning light

Connector B

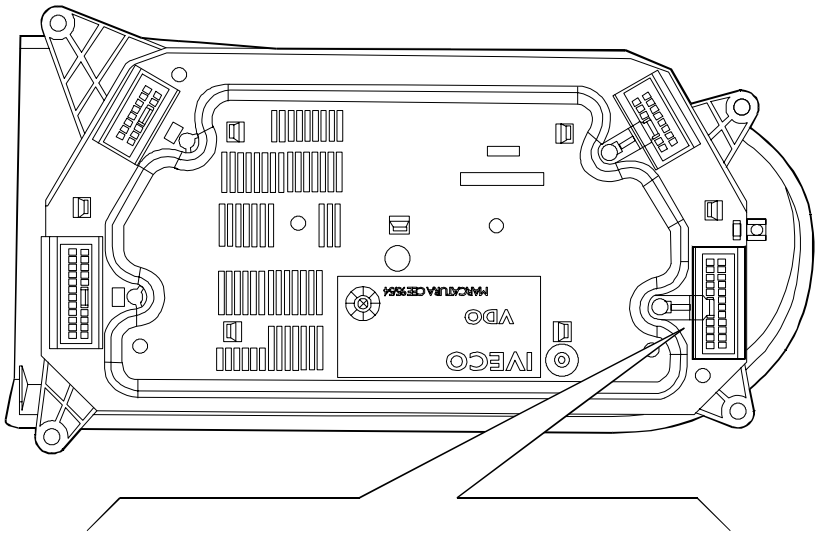

8643

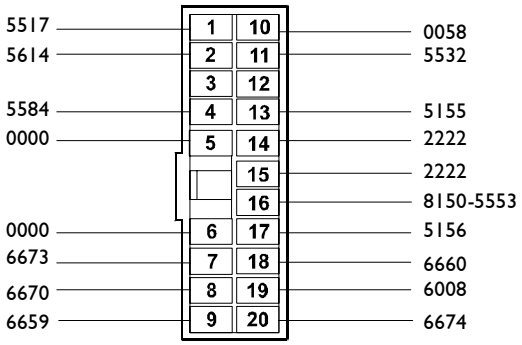

8645

B

Ref.		Cable colour code	Function
	1	5517	Tachometric signal
	2	5614	Rev counter signal
	3	-	-
	4	5584	To cell 28 of diagnostic connector (engine rpm repeater)
	5	0000	To pin 14 of connector B of electronic control unit for EDC
	6	0000	Earth for warming on warning light
	7	6673	EBD Failure warning light
	8	6670	ABS failure warning light
	9	6659	Supply (+15) for ABD, ABS and EBD failure warning lights
	10	0058	To electronic tachometer transmitter
B	11	5532	To pin 2 of connector B of air conditioning system electronic control unit
	12	-	-
	13	5155	To pin 4 of connector B of EDC electronic control unit (tachometric signal repeaer)
	14	2222	Tachometric signal repeater for rear differential lock
	15	2222	Tachometric signal repeater
	16	8150	Positive for EDC failure and warming on warning lights (Unijet)
		5553	Positive for warming on warning light
	17	5156	EDC failure warning light
	18	6660	Rear differential lock warning light
	19	6008	Self-levelling suspension system failure warning light
	20	6674	A.S.R. pilot lamp

Connector C

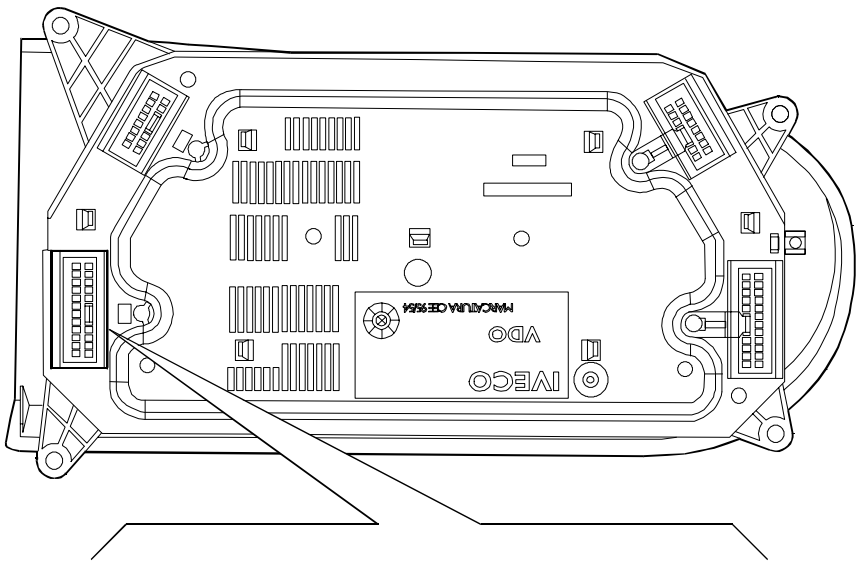

8643

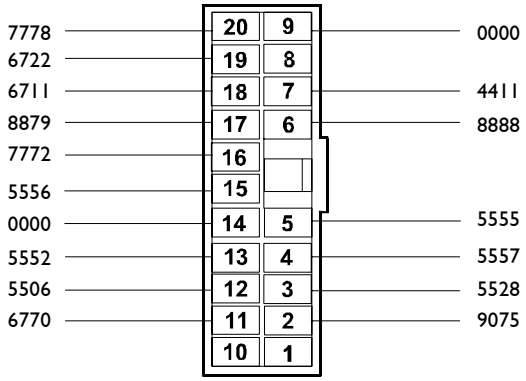

8646

C

Ref.		Cable colour code	Function
C	1	-	Retarder on warning light (bus)
	2	9075	Door open warning light
	3	5528	Engine coolant fluid temperature gauge
	4	5557	Fuel level gauge
	5	5555	Fuel reserve warning light
	6	8888	Supply (+50)
	7	4411	Positive with exterior light switch on
	8	-	To pin A1 of radio receiver set
	9	0000	Connection to signal earth ms7
	10	-	Fog lamp pilot lamp
	11	6770	Sensor for immobilizer on signal
	12	5506	Low engine oil level sensor
	13	5552	Engine coolant fluid high temperature warning light
	14	0000	Earth
	15	5556	Low engine oil level sensor
	16	7772	Supply (+30)
	17	8879	Supply (+15)
	18	6711	Air bag failure warning light
	19	6722	Supply (+15) for air bag failure signal
	20	7778	Supply (+15) for battery charge failure warning light

Connector D

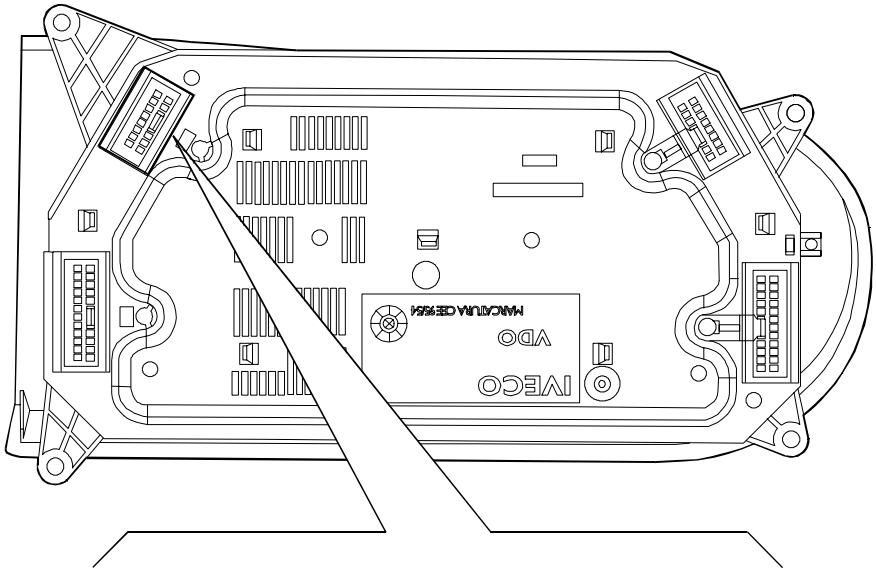

8643

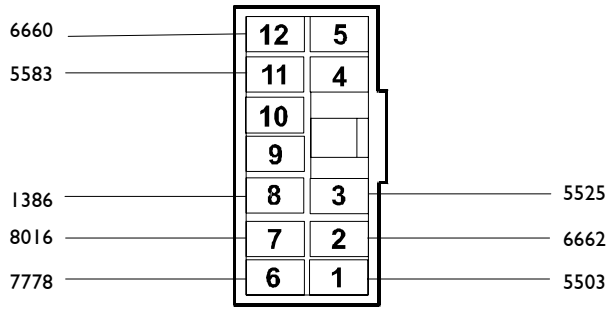

8647

D

Ref.		Cable colour code	Function
D	1	5503	Low engine oil pressure warning light
	2	6662	Handbrake engaged warning light
	3	5525	Low power steering fluid level warning light
	4	-	-
	5	-	Rotary translating door failure warning lamp (bus)
	6	7778	Battery charge failure warning light
	7	8016	Brake failure warning light
	8	1386	Trailer direction indicators on warning light
	9	-	Handle lock pilot lamp
	10	-	-
	11	5583	EGR failure warning light
	12	6660	Total power takeoff (PTO) on warning light

SWITCH ASSEMBLY

All the switches and push buttons of this module incorporate a warning led.

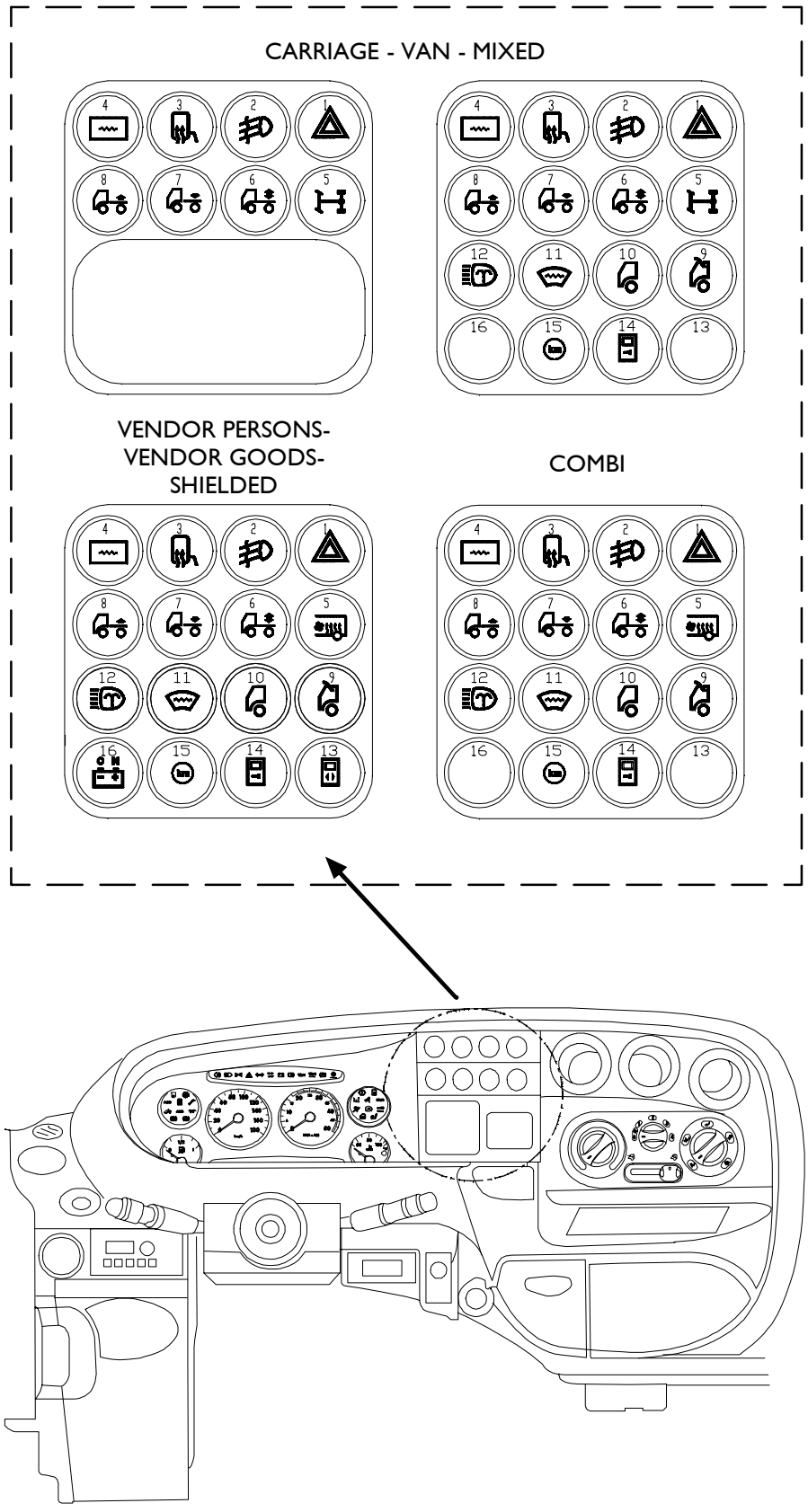

Legend

Position	Function	Vehicles	
		CARRIAGE - VAN - MIXED	
		Standard	Optional
1	Emergency lights	X	
2	Fog lights		X
3	Heated rearview mirrors		X
4	Rear glass		X
5	Rear differential lock		X
6	Level compressed air suspension		X
7	Lower compressed air suspension		X
8	Lift compressed air suspension		X
9	Electrical manhole opens		X
10	Electrical manhole closes		X
11	Heated windshield		X
12	Light washer		X
13	Cap		
14	Rear door lock		X
15	Speed limiter adjustment		X
16	Cap		
		VENDOR PERSONS-VENDOR GOODS-SHIELDED	
1	Emergency lights	X	
2	Fog lights		X
3	Heated rearview mirrors		X
4	Rear glass		X
5	Air heating		X
6	Level compressed air suspension		X
7	Lower compressed air suspension		X
8	Lift compressed air suspension		X
9	Electrical manhole opens		X
10	Electrical manhole closes		X
11	Heated windshield		X
12	Light washer		X
13	Rotary travel holder	X	
14	Rear door lock		X
15	Speed limiter adjustment		X
16	Battery sectioner reset	X	
		COMBI	
1	Emergency lights	X	
2	Fog lights		X
3	Heated rearview mirrors		X
4	Rear glass		X
5	Air heating		X
6	Level compressed air suspension		X
7	Lower compressed air suspension		X
8	Lift compressed air suspension		X
9	Electrical manhole opens		X
10	Electrical manhole closes		X
11	Heated windshield		X
12	Light washer		X
13	Cap		
14	Rear door lock		X
15	Speed limiter adjustment		X
16	Cap		

STALK UNIT

54032

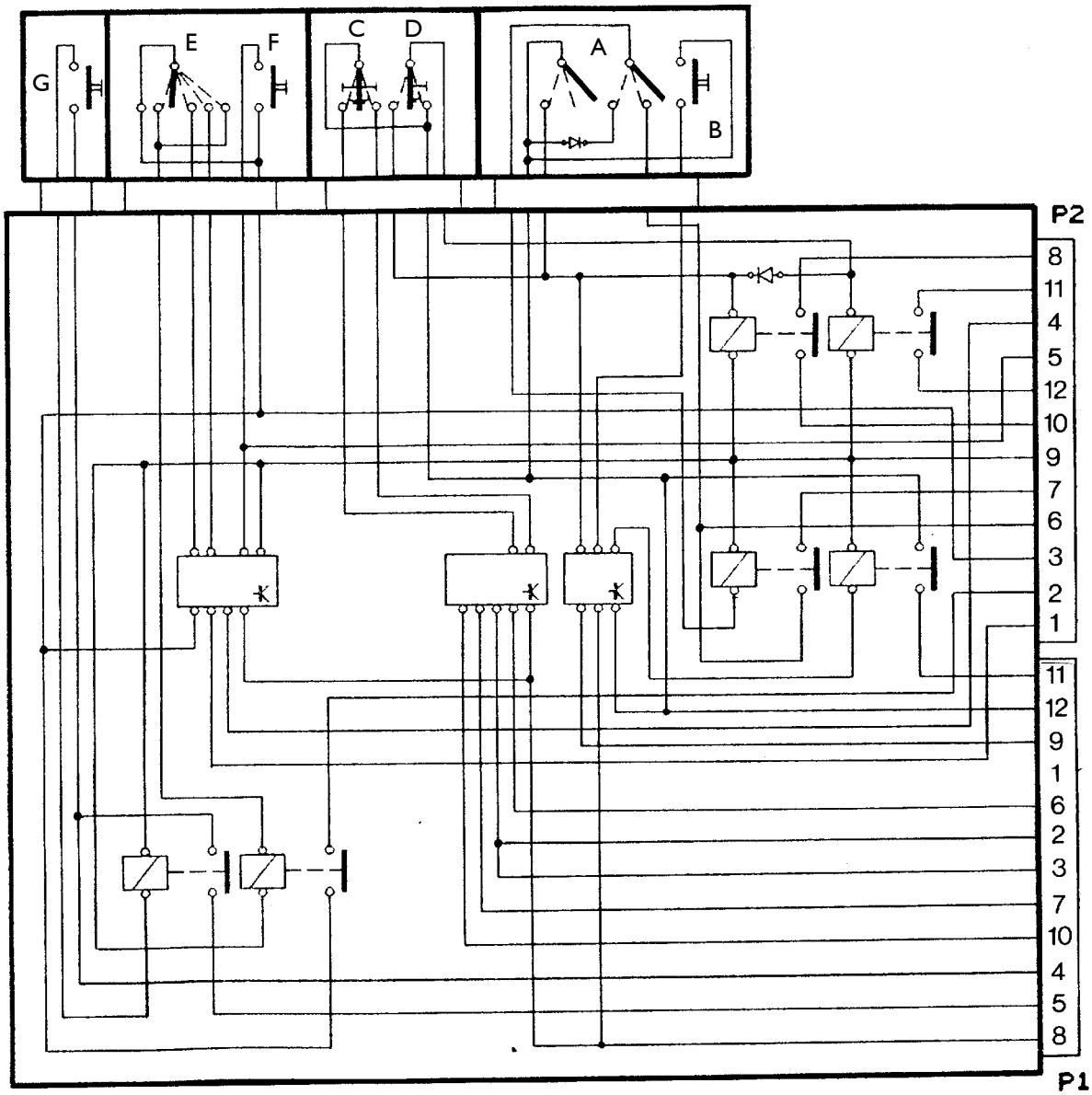

8651

III.5 WIRING DIAGRAM

A. Exterior light switch
B. Rear fog guard button
C. Direction indicator switch
D. High beam headlamp/flasher switch
E. Windscreen wiper switch
F. Windscreen washer pump button
G. Horn button

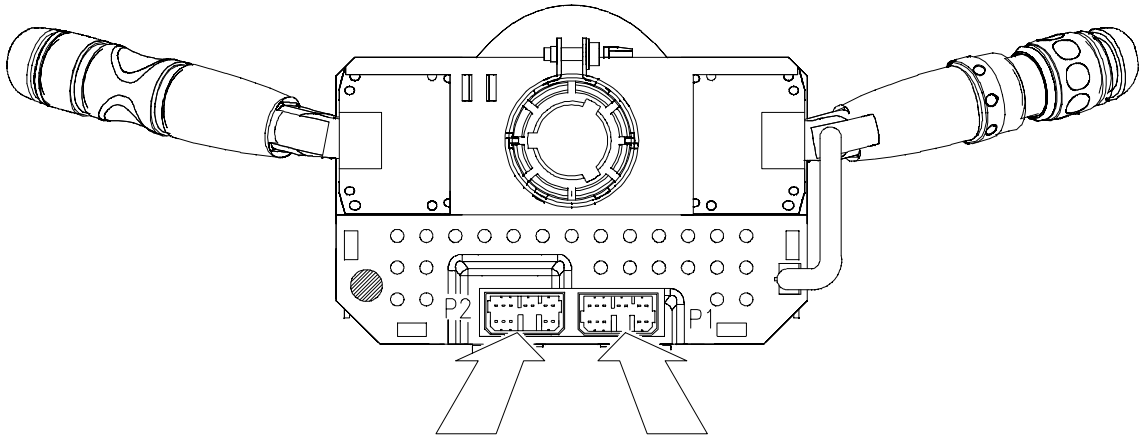

8640

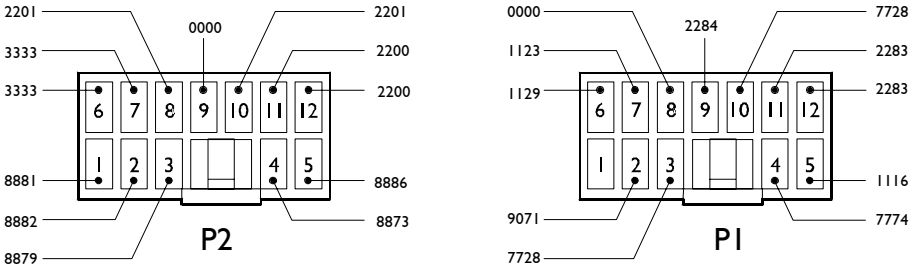

TECHNICAL VIEW OF COMPONENT AND CONNECTORS OF CAB/BONNET CABLE TO BE CONNECTED TO STALK UNIT 8641

Ref.		Function	Cable colour code
P1 (Black)	1	-	-
	2	Input from alarm	9071
	3	Input from hazard warning lights	7728
	4	Supply (+30) for horn button	7774
	5	Horns	1116
	6	Left-hand direction indicator	1129
	7	Right-hand direction indicator	1123
	8	Signal earth	0000
	9	Positive with fog lights on	2284
	10	Supply (+30) for direction indicators and hazard warning lights	7728
	11	Rear fog guard and rear fog guard on warning	2283
	12	Supply (+15)	2283
P2 (Blue)	1	Windscreen wiper first speed	8881
	2	Windscreen wiper second speed	8882
	3	Supply (+15/A) for windscreen wiper	8879
	4	Windscreen wiper reset input	8873
	5	Electric pump for windscreen washer	8886
	6	Supply (+30) for side lights switch	3333
	7	Side lights	3333
	8	Supply (+15/A) for switching on low beam headlamps	2201
	9	Power earth	0000
	10	Low beam headlamps	2201
	11	Supply (+15/A) for switching on high beam headlamps	2200
	12	High beam headlamps	2200

Functions

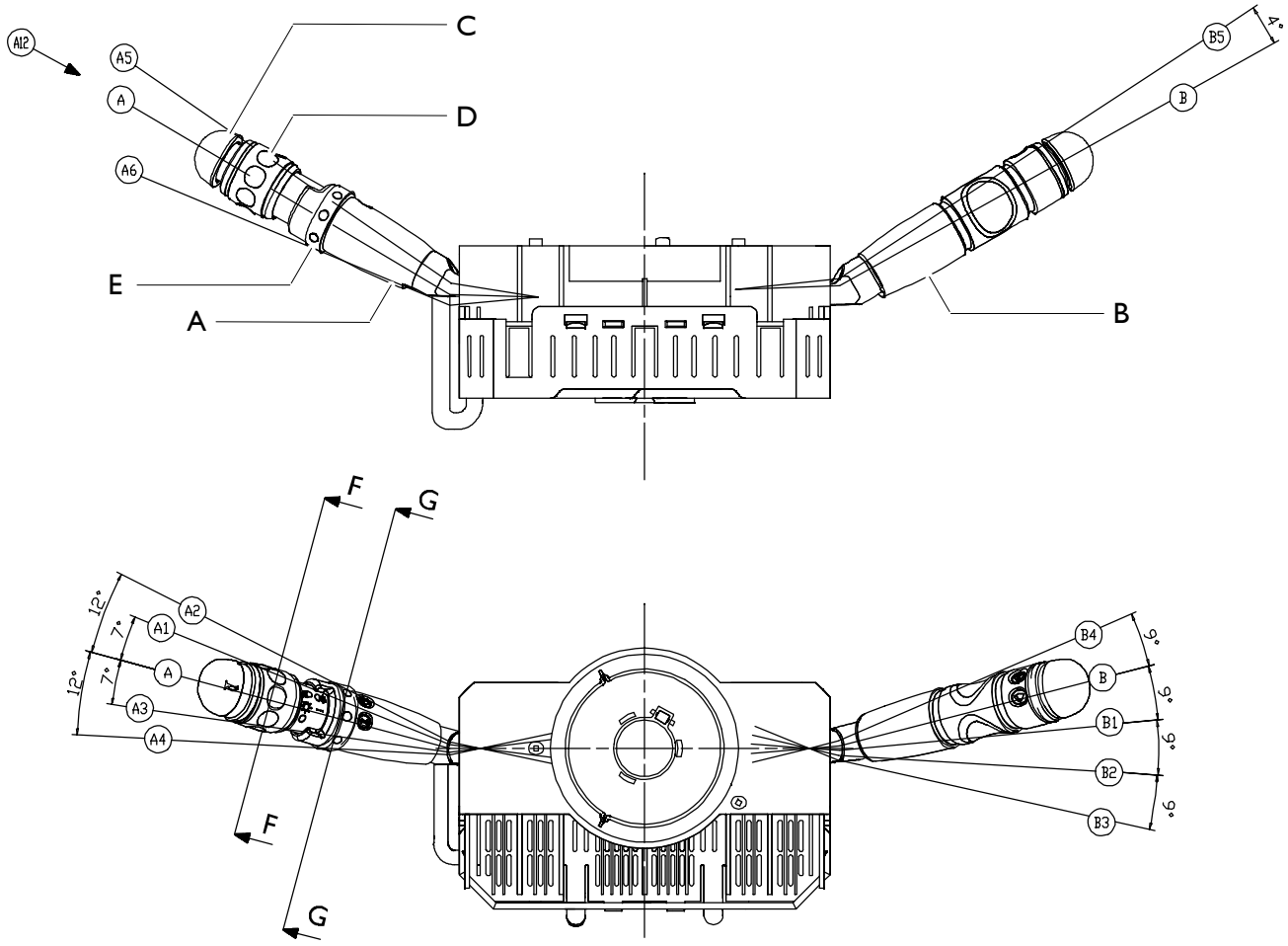

7409

EXTERIOR LIGHTING KNURLED RING ROTATION
SECTION **F-F**

REAR FOG GUARD KNURLED RING ROTATION
SECTION **G-G**

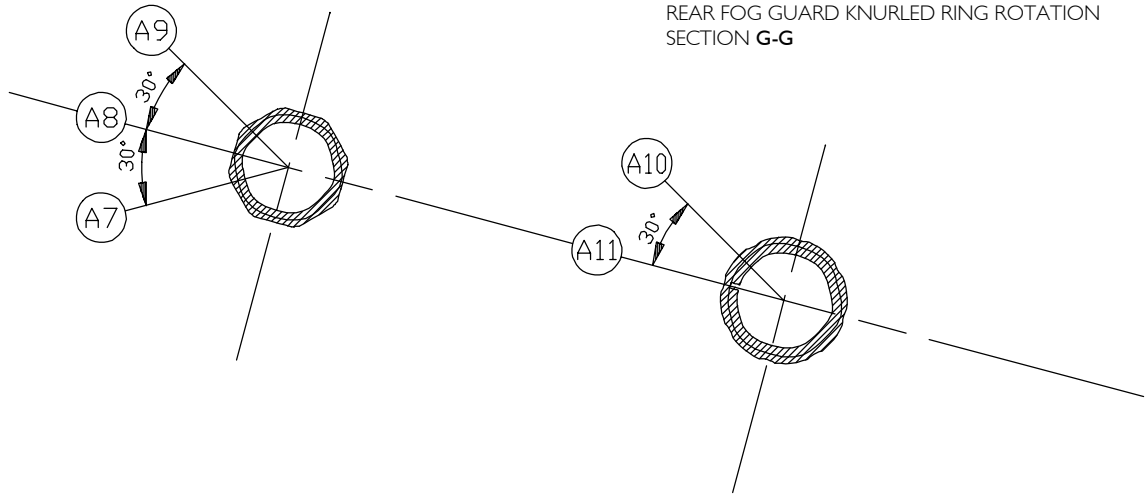

7433

III.6 **A.-B.** POSITIONS OF STALKS **- C.** HORN CONTROL **- D.** EXTERIOR LIGHTS KNURLED RING **- E.** REAR FOG GUARD KNURLED RING

Technical view	Position	Electrical function
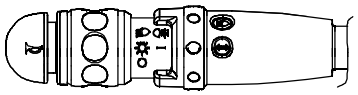 7410	A	Position "0"
	A1	Right lane change (unstable)
	A2	Right direction
	A3	Left lane change (unstable)
	A4	Left direction
	A5	Light flashing
	A6	High beam headlamps
	A7	Side light switch position "0"
	A8	Side lights
	A9	Low beam headlamps plus high beam and fog guard enable
	A10	Rear fog guard stable position (on or off)
	A11	Rear fog guard unstable position off Rear fog guard unstable position on only with light switch at position A9 of rear fog guards on
	A12	Horn
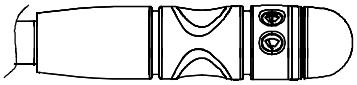 7411	B	Windscreen wiper reset
	B1	Intermittent device
	B2	First Speed
	B3	Second speed
	B4	Second speed unstable
	B5	Windscreen washer

Cruise Control

The cruise control is operated by push-buttons (fig. III.7) installed on the windscreen wiper control lever with following functions:

- adjust engine idle speed;
- read and adjust drive rpm;
- set and store travel speed.

Cruise control is deactivated by pressing the clutch pedal, the brake pedal and keeping the accelerator pedal pressed for over 10 seconds or by turning the switch to "OFF".

Cf. the Use and Maintenance Handbook on board the vehicle for further information on use.

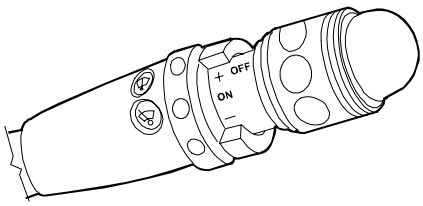

000245t

III.7 CRUISE CONTROL

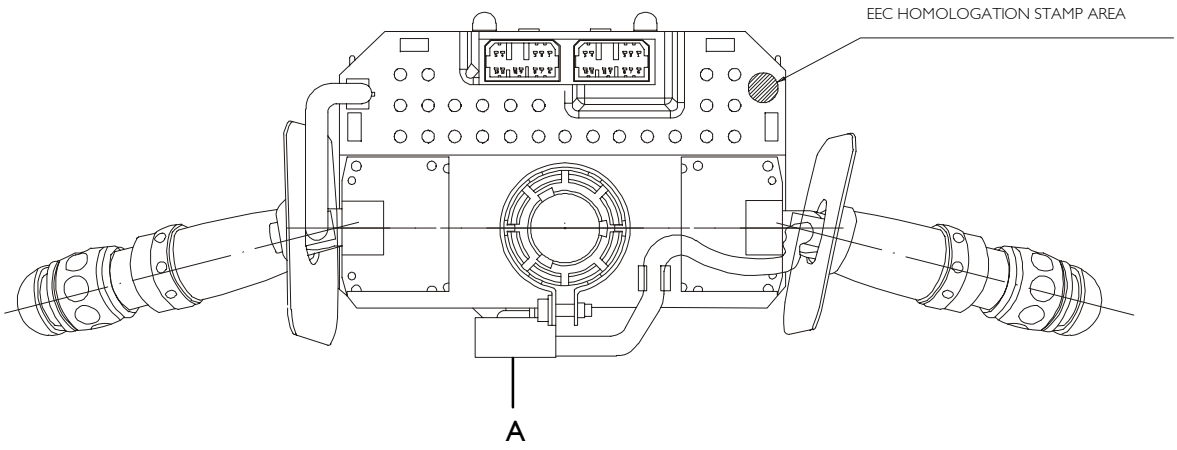

III.8 TECHNICAL VIEW OF THE COMPONENT
A. CONNECTOR (CRUISE CONTROL)

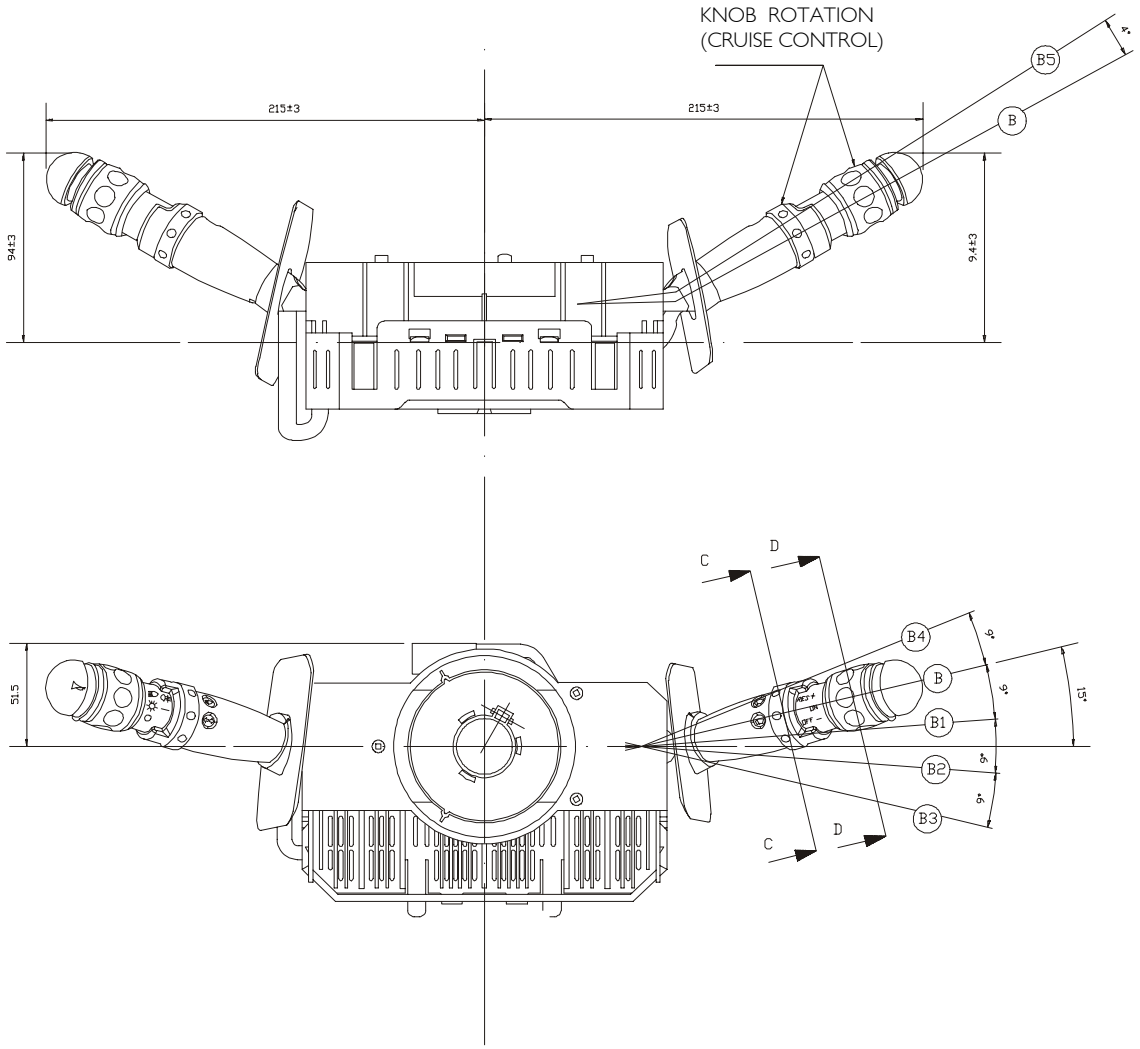

III.9 TECHNICAL VIEW OF THE COMPONENT

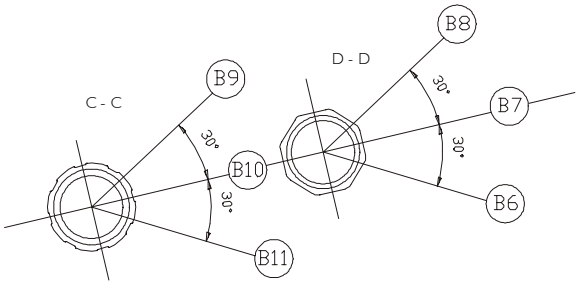

III.10 KNOB ROTATION (CRUISE CONTROL)

Position	Function
B6	SET -
B7	ON
B8	SET +
B9	RESET
B10	HOME
B11	OFF
B - B5	WINDSCREEN WIPER

ELECTRONIC SYSTEMS

	Page
IMMOBILIZER	3
❑ General description	3
❑ System components	4
❑ Key teaching procedure	7
❑ System self-diagnostics	8
❑ Diagnostics through the Blink Code	8
ABS/EBD/ABD	12
❑ General	12
SYSTEM WITH 4 CROSSED CHANNELS (X)	16
❑ Location of components	17
❑ Sensor on phonic wheel	18
❑ Electrohydraulic control unit/modulator	19
❑ Electrohydraulic modulator	20
SYSTEM WITH 4 PARALLEL CHANNELS (11)	25
❑ Location of components	26
❑ Electrohydraulic control unit/modulator	27
❑ Electrohydraulic modulator	28
EGR (8140.63)	35
❑ General	35
❑ Operating principle	36
❑ EGR system for Combi vehicle 8140.43B ÷ 8140.43S engines	37
❑ EGR system for F1A engines	38
SYSTEM COMPONENTS	39
❑ E.G.R. air valve	39
❑ Modulating solenoid valve	39
❑ Engine coolant temperature sensor	40
❑ Engine rpm sensor	40
❑ Vacuum sensor	40
❑ Potentiometer on injection pump lever	41
❑ Absolute pressure sensor	41
❑ EGR Electronic control unit	42
❑ Oxidising catalyst	45
COMMON RAIL (8140.43S)	46
❑ General	46
COMMON RAIL (F1A)	48
❑ Hydraulic system (Common Rail - F1A)	49
SYSTEM COMPONENTS	50
❑ Camshaft pulley and timing sensor	50
❑ Flywheel and rpm sensor	51
❑ Flywheel and camshaft sensor specifications	52
❑ Pre-filter	53
❑ Electric pump	53
❑ Fuel filter	54
❑ High pressure pump	55
❑ High-pressure pump (F1A engine)	56
❑ Pressure regulator	57

Print 603.43.371/A

Base - 4th Ed. - May 2002
Revi - May 2003

	Page
❑ Pressure regulator (F1A)	58
❑ Rail (pressure accumulator)	59
❑ Rail (pressure accumulator - F1A)	60
❑ Flow limiters	61
❑ Pressure limiter	61
❑ Fuel pressure sensor	61
❑ Injectors	62
❑ Fuel outlets unit	63
❑ Air flow meter	64
❑ Atmospheric pressure sensor	66
❑ Engine coolant temperature sensor	66
❑ Fuel temperature sensor	66
❑ Brake pedal switches	68
❑ Clutch pedal switch	68
❑ Electromagnetic junction fan	69
❑ Preheat plug electronic centre (F1A engine)	70
❑ Preheat plugs	70
EDC MS6.3/EDC16	71
❑ Electronic injection control	71
SYSTEM OPERATION	71
❑ Self-diagnosis	71
BOSCH MS6.3 EDC CONTROL UNIT	75
❑ Control unit connection to the injection cable on engine side (housing A)	76
❑ Control unit connection to cab-bonnet cable (housing B)	77
❑ EDC system components	78
BLINK CODE	80
❑ Common Rail 8140.43B - 8140.43S – 8140.43N – EDC MS6.3	80
❑ Common Rail F1A	81
EDC16	81/1
BOSCH EDC16 CONTROL UNIT	81/2
ACCELERATOR PEDAL SENSOR	81/7
SENSOR ON DISTRIBUTING SHAFT	81/8
INJECTION CABLE – F1A .10, .12 (WITH/WITHOUT THE EGR)	81/9
❑ Connectors between cables	81/10
DIAGNOSTIC CONNECTOR	81/11
❑ Diagnostic connector pin description table	81/12
❑ High-pressure pump (F1A engine)	81/13
CLIMATE CONTROL	82
❑ General	82
❑ Operating logic	83
SYSTEM COMPONENTS	88
❑ Electronic control unit	88
❑ Outside air temperature sensor	89
❑ Inside temperature sensor	90
❑ Blown air temperature sensor	91
❑ Evaporator temperature sensor	91
❑ Required temperature potentiometer	91
❑ Ventilation control potentiometer	92
❑ Electronic fan control module	93
❑ Air mixing gear motor	94
❑ Re-circulation gear motor	95
❑ Compressor	96
❑ Safety pressure switches	96

	Page
SYSTEM SELF-DIAGNOSTICS	97
❑ Diagnostics through blink code	97
❑ Blink codes	98
AIR BAG	100
❑ General	100
❑ Operation	101
❑ Preliminary rules	102
❑ Painting work	103
❑ Health hazards	103
❑ Effects of over-exposure	103
❑ Operations after an accident	103
❑ Air bag module scrapping	104
❑ Rules of safety in handling air bag modules	104
❑ Scrapping pretensioners	105
❑ Rules of safety in handling pretensioners	105
❑ Removing or scrapping an air bag module that has not been deployed from a reparable vehicle	106
❑ Operations on system components	106
❑ Removing and scrapping an activated air bag module and pretensioner from a vehicle	106
❑ Deployment of an air bag	107
❑ Deployment of air bag modules and electronic pretensioners still on board of irreparable vehicles	108
SYSTEM COMPONENTS	109
❑ Electronic control unit	109
❑ One-connector electronic control unit pin-out	110
❑ ECU pin-out to the two connectors	113
❑ Drivers air bag module	114
❑ Clock spring	115
❑ Passenger's air bag module	117
❑ Pretensioners	118
❑ Driver's/passenger's pretensioner	119
❑ Centre passenger's pretensioner	120
SYSTEM DIAGNOSTICS	121
ELECTRONIC TACHOGRAPH INSTALLATION	122
❑ Removing the lower dashboard cover	122
❑ Electronic tachograph control unit housing assembly	122
❑ Assembling the tachograph control unit support on the dashboard	123
❑ Removing the instrument cluster module	124
❑ Operations on gearbox	126
❑ Operation in bonnet	127
DOOR-BLOCKER WITH ANTI-THEFT PROTECTION	128
❑ General	128
❑ System components	129
❑ Operation	130
❑ Arrangement of components	131
MAIN COMPONENTS OF THE SYSTEM	132
❑ Remote-control key	132
❑ Electronic central control unit (ECU)	134
❑ Arrangement of the switches	136
❑ Electronic volumetric-detection module	139
❑ Siren	140
❑ Error codes	142
❑ Error code table	143

	Page
AIR SUSPENSIONS ECAS	144
❑ WABCO electronically controlled air suspensions (ECAS)	145
LOCATION OF THE COMPONENTS ON THE VEHICLE	147
❑ Vehicles with braking system without ABS	147
❑ Vehicles with ABS system	148
SYSTEM COMPONENTS	149
❑ Electronic Control Unit	149
❑ Level sensor	151
❑ Pneumatic supply unit	152
❑ Brake action compensator	153
DESCRIPTION AND OPERATION	155
❑ Chassis lifting	155
❑ Chassis lowering	156
❑ Chassis leveling	157
VB TECHNIEK ELECTRONIC CONTROL AIR SUSPENSIONS	158
LOCATION OF MAIN COMPONENTS ON THE VEHICLE	160
❑ Vehicles with braking system not equipped with ABS system	160
❑ Vehicles equipped with ABS system	161
SYSTEM COMPONENTS	162
❑ Electronic Control Unit (35C - 40C - 45C - 50C)	162
❑ Electronic control unit (60C - 65C)	163
❑ Level sensor	164
❑ Brake action compensator	165
SYSTEM FUNCTIONALITY	166
❑ Chassis leveling	166
❑ Chassis lifting	166
❑ Chassis lowering	168
ROTATING SLIDING DOOR	170
❑ Description	170
SYSTEM COMPONENTS	171
❑ Electronic center	171
❑ Optical and sound warnings	173
❑ Sound device	173
DESCRIPTION AND OPERATION	174
❑ Emergency operation	175
❑ Diagnosis	175
❑ Description of opening/closing cycle	176
❑ Description of opening/closing cycle	177
❑ Operating diagram	178
TELMA ELECTRICAL RETARDER	179
❑ General	179
❑ Operation	179
VARIABLE GEOMETRY TURBO COMPRESSOR VGT	182
❑ Description	182

IMMOBILIZER

General description

In order to increase protection against attempted theft, the vehicles have been fitted with an electronic engine block system called "Immobilizer" which is activated automatically removing the ignition key. In fact, the keys are fitted with an electronic "Transponder" that sends a code signal to a special electronic control unit "ICU" which, only allows the engine to be started if it recognises the code sent. del motore.

NB The "ACT" actuator, may be the "EDC" control unit or a device called "DDS" (Diesel Anti-Theft Device) depending on the engine.

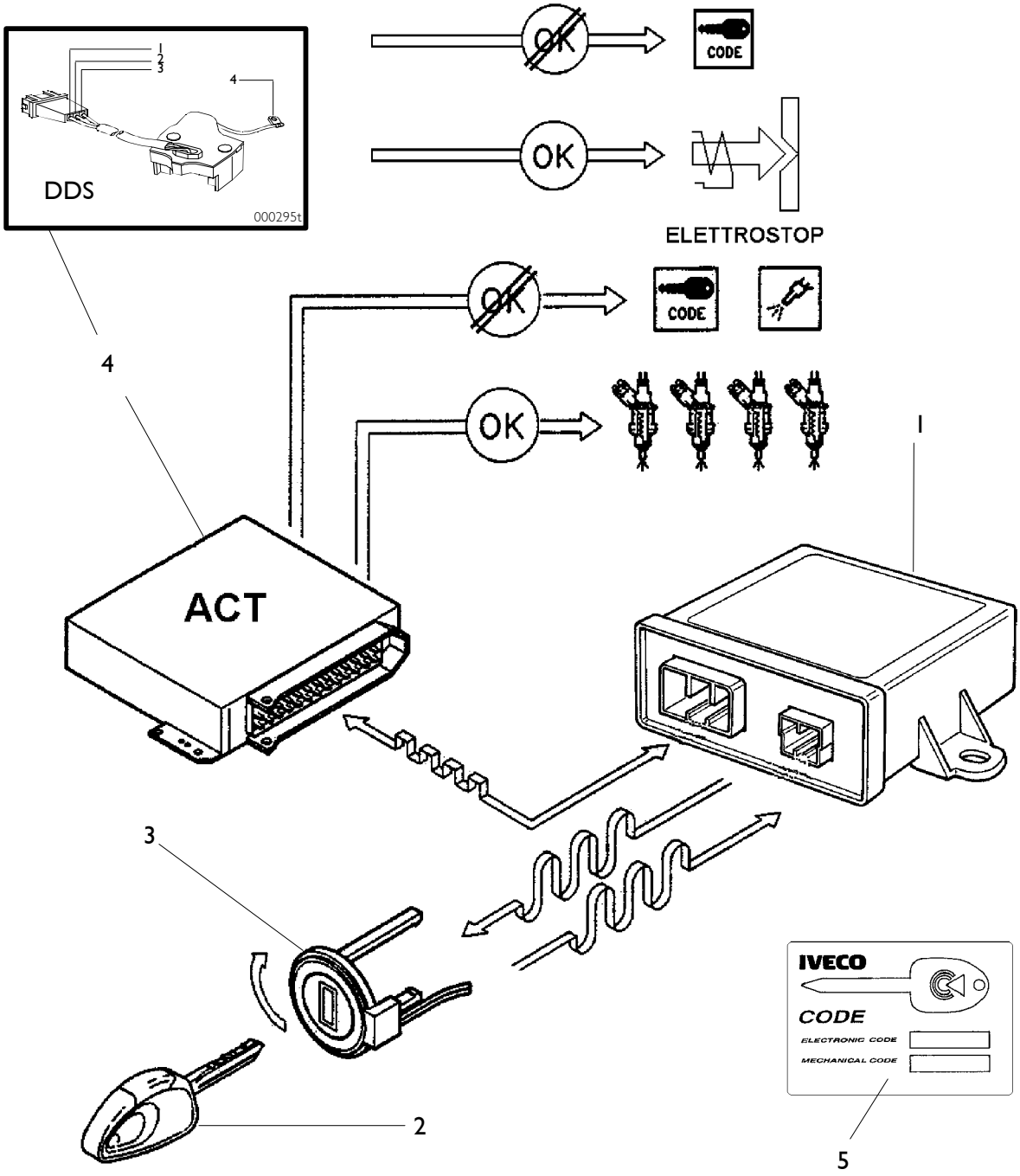

IV.1 WARNING LIGHT MAIN SYSTEM COMPONENTS
1. MMOBILIZER ELECTRONIC CONTROL UNIT "ICU" - **2.** ELECTRONIC KEY CONTAINING THE TRANSPONDER - **3.** AERIAL USED FOR SENDING/READING THE KEY CODE - **4.** "ACT" ACTUATOR THAT SENDS OR BLOCKS THE FLOW OF FUEL - **5.** CODE CARD CONTAINING THE CODE FOR EMERGENCY STARTING

System components

"ICU" Electronic control unit

This is located behind the steering wheel column.

It is capable of conversing with the "EDC" control unit in .13 vehicles via the "CAN line" or with the "DDS" device in .9 - .11 vehicles via "line W".

The main functions of the control unit are:

- recognising insertion and rotation of the key in the ignition switch,
- activating and reading the secret code emitted by the Transponder,
- managing control and processing the codes,
- communicating with the "EDC" control unit or the "DDS" device,
- memorising any faults,
- system diagnostics.

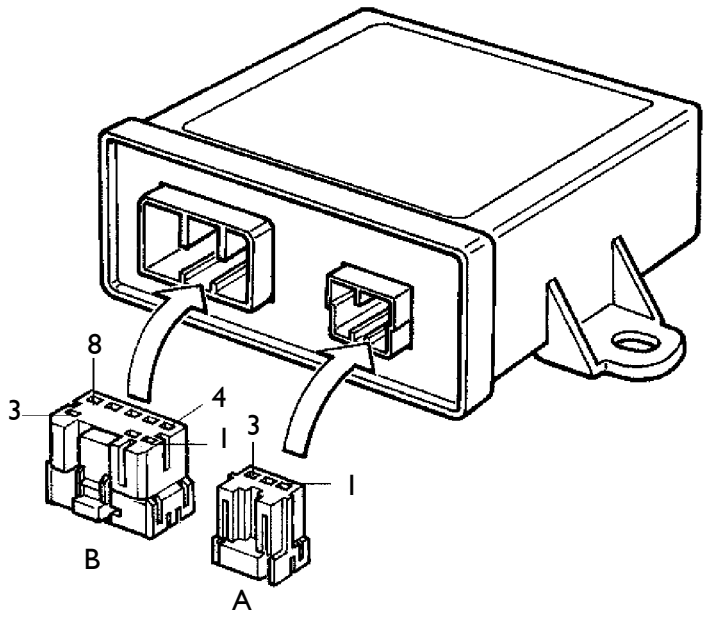

00290t

Pin	Function
A1	Aerial
A2	Aerial
A3	—
B1	CAN line L for EDC control unit pin 39
B2	Line K for 38-pin diagnostic connector pin 12
B3	Negative for Immobilizer failure warning lamp (pin C11 instrument cluster)
B4	CAN H line for EDC control unit pin 8
B5	Line W for DDS device pin 3
B6	Earth
B7	Key-operated positive supply
B8	—

Electronic keys

An electronic device called "Transponder" is fitted in the key grip which is not supplied by any battery, it is not removable and contains and transmits the secret code.

Inserting the key, the "Transponder" is activated, then, when it receives the radio waves emitted by the aerial (fitted on the ignition switch block), it automatically answers transmitting the secret code.

If the two codes correspond, the control unit enables starting, otherwise it shuts off the flow of fuel thereby preventing the engine from starting.

The keys provided are two. Each key contains a "Transponder" with the corresponding secret code. It is highly important to carry out the correct key teaching procedure.

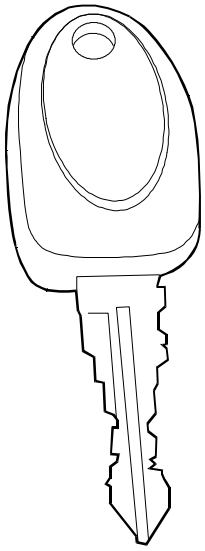

000291t

IV.2 ELECTRONIC KEYS

Aerial

This is fitted coaxially with the ignition switch and it has the task of:

– supplying the energy to the "Transponder" for sending the secret code
– receiving the signal from the Transponder and sending it to the control unit.

It is connected to the control unit on pins A1/A2.

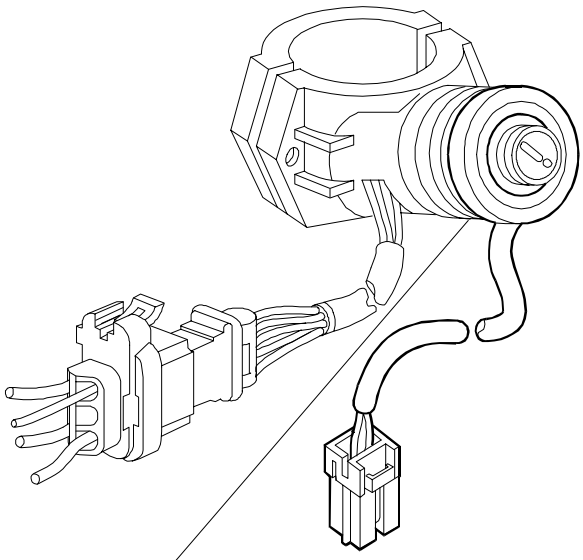

8659

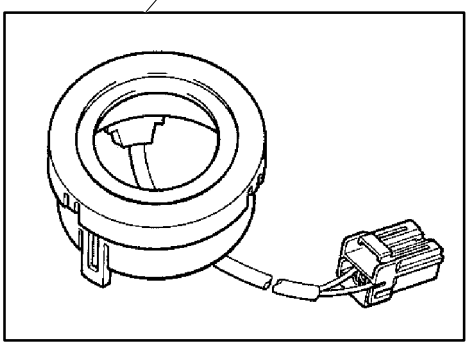

000292t

IV.3 AERIAL

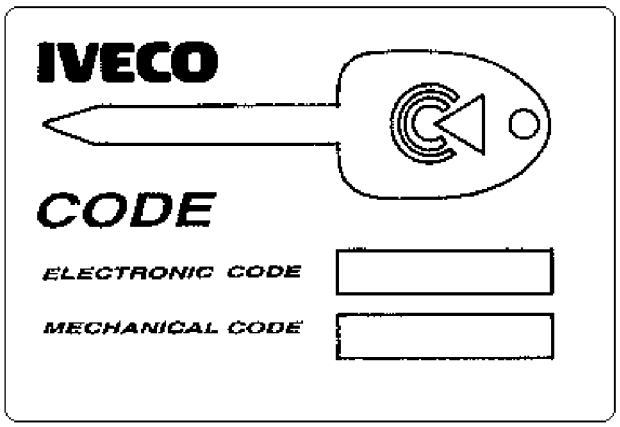

000293t

IV.4 CODE CARD

Code card

Card containing the Electronic code and the Mechanical code.

– Electronic code or PIN code

Code absolutely necessary for the starting procedure in the event of an emergency

– Mechanical code

Code needed for request to duplicate the mechanical part of the key

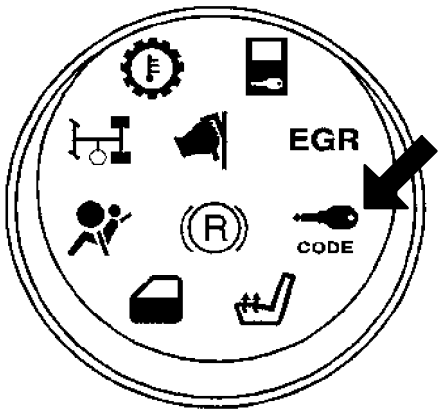

000294t

IV.5 WARNING LIGHT

Warning light

This is located on the instrument cluster and informs the driver whether the system is working properly or of any possible faults.

Moving the ignition key to drive the control unit tests the system turning on the warning light for about "4 seconds".

If it goes out after this time, this means that the key has been recognised and the system is working, if it does not it indicates the possible system faults.

Key teaching procedure

In the event of loss or replacement of the keys it will be absolutely necessary to follow a precise procedure solely through the diagnostic tools.

Key teaching

- Connect the diagnostic tool.
- Engage the first key and turn it to drive.
- Wait for the "code" warning light on the cluster to go out and turn the key to stop.
- Engage the new key and turn it to drive, repeat the operations described previously.

If the code warning light does not go out during the teaching procedure, this means that the operation has not been carried out correctly.

Possible causes:

- The same key has been engaged twice.
- The key has not been turned to stop in useful time.
- An attempt has been made to teach more than three keys.
- Keys already used with another control unit have been used.
- Aerial reception problems.

NB After following this procedure the control unit memorises the keys and will no longer make this operation possible without entering the PIN code. The keys enabled for starting will never be more than three.

A previously memorised key but not included in the last teaching process is no longer able to start the vehicle.

"DDS" device

This is present only on .9 - .11 vehicles and it is fitted directly on the injection pump.

It is an electronic device which on receiving the command from the control unit on terminal "3" is able to control the opening of the electrostop, through terminal "4", to prevent the engine from starting when the system is activated.

When needing to replace this device it is necessary to remove the injection pump.

Emergency procedure

If the vehicle will not start due to a key that has not been recognised, immobilizer control unit fault, etc...., it is necessary to carry out a specific starting procedure which differs according to the type of "ACT" actuator.

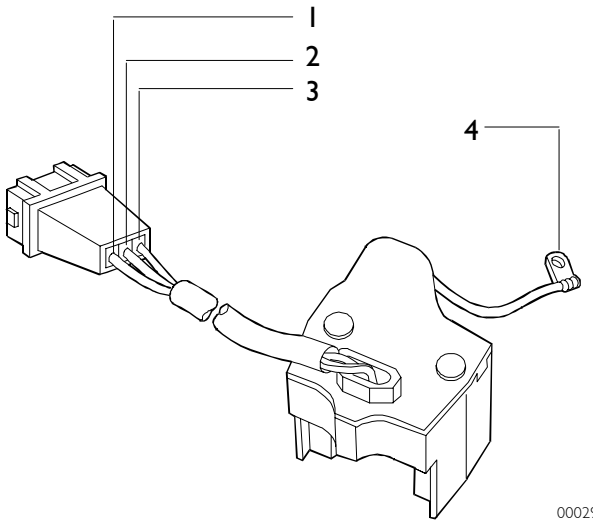

IV.6 DDS DEVICE
1. EARTH **- 2.** KEY-OPERATED SUPPLY **- 3.** LINE W FROM CONTROL UNIT PIN B5 **- 4.** COMMAND FOR ELECTROSTOP

Vehicles with "DDS" device

It is absolutely necessary to enter the "PIN code" given on the "Code Card", only through the special diagnostic tools available and following the information provided by them.

Vehicles with "EDC" device

It is absolutely necessary to enter the "PIN code" given on the "Code Card", only using the accelerator pedal as described below:

- Move the ignition key to Drive.
- After about ~ 2 seconds the EDC warning light starts to flash quickly
- Press the accelerator pedal and keep it pressed for about ~ 15 seconds.
- The EDC warning lamp starts flashing slowly.
- When the number of flashes corresponds to the first digit of the PIN code press the accelerator completely and then release it again. (During this press the EDC warning light stays off).
- Continue with the reading and corresponding pressing on the accelerator pedal for the remaining four numbers of the "PIN code".
- At the end of the sequence if the code entered is correct and there are no system faults, the EDC warning light stops flashing. The operation has been concluded correctly.
- Start the vehicle.

System self-diagnostics

After the initial test, depending on the behaviour of the "code" warning light, the system is capable of informing the operator of possible system faults, as follows:

- Warning light "flashing continuously" with a frequency of "0.3 sec. ON" and "3 sec. OFF" means that there is an error or that the emergency starting procedure has not been carried out correctly.
- Warning light "flashing continuously" with a frequency of "0.3 sec. ON" and " 0.3 sec. OFF", means that no key teaching procedure has been carried out.
- Warning light "always on" means that the key teaching procedure has not been carried out correctly.

For preliminary information, it is possible to display any fault codes on the warning light module of the instrument cluster activating the Blink code.

For complete, more thorough diagnosis it is however indispensable to use the tools available to the service network, such as MODUS,

Diagnostics through the Blink Code

To activate the Blink code it is necessary to earth line K for at least 2 seconds with the ignition key at drive to display the first error.

Repeat this operation (line K at earth) to display any other faults.

The table below shows the various error codes that may appear during diagnostics.

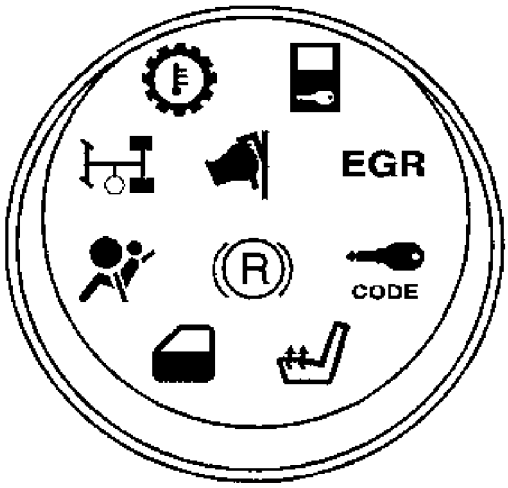

000294t

Number of blinks	Type of fault
1	"ACT" actuator not connected or not configured
2	"ACT" actuator does not release fuel "ACT" actuator does not communicate during installation
3	"ACT" actuator not installed
4	Short circuit on communication line between control unit and "DDS" device Short circuit/disturbance on communication line between control unit and "EDC"
5	Key with unknown code
6	Key with code not detected
7	Aerial not connected
8	Internal control unit fault
9	Short circuit on alarm disable line
—	"Code" warning light short circuit
—	"Code" warning light open circuit

<u>If after accurate diagnosis</u> it is necessary to replace one or more components, proceed as described below

ALL ENGINES		
PART TO BE REPLACED	**PARTS TO BE ORDERED**	**OPERATIONS AND NOTES**
One or two keys (with one still available) Addition of a key	• Parts Keys	⇒ Cut the keys according to the mechanical code. ⇒ Perform "Key memorising" in Immobilizer diagnostics (*). **NB.** In this procedure also enter the remaining working keys otherwise the will NO LONGER be enabled for starting.
Steering lock and/or ratchets ALL the keys	• KEYS KIT with: 2 cut Parts keysSteering lock + Ratchets	⇒ Change the steering lock and ratchets. ⇒ Perform "Key memorising" in Immobilizer diagnostics (*). ⇒ State the **new** mechanical code on the Code Card.
Ratchets (excluding steering lock)	• KIT with: 2 traditional keys + ratchets	⇒ Change the ratchets. **NB.** Traditional keys means keys without Transponder.
Code card (due to loss)	• Code Card	⇒ Complete the "Code Card Duplicate Request Form" printing it from MODUS and send it as mentioned in the ORDER MANAGEMENT form of the IVECO SPARES warehouse concerned.
Aerial	• Aerial	⇒ Replace.

PC/NA - ID/TCA ENGINES		
PART TO BE REPLACED	**PARTS TO BE ORDERED**	**OPERATIONS AND NOTES**
ECU Immobilizer	• KIT ECU Including: Immobilizer ECU - 2 keys to be cut New Code Card • DDS actuator (To be ordered separately)	⇒ Cut the keys according to the mechanical code. ⇒ Perform "Key memorising" in Immobilizer diagnostics (*). **NB.** At the end of this operation, check that the electronic code shown on the screen corresponds to the one printed on the Code Card, if it is different, put the one on the screen on the Code Card. ⇒ Replace the DDS actuator. ⇒ Put the old mechanical code on the new Code Card. ⇒ Scrap the old keys as it will be NO LONGER possible to use them. ⇒ Complete the "New Immobilizer Installation Form" printing it from MODUS and send it as mentioned in the ORDER MANAGEMENT form of the IVECO SPARES warehouse concerned.
DDS actuator Electrostop	• DDS actuator	⇒ In Immobilizer diagnostics perform "Actuator Reset".

UNIJET ENGINE		
PART TO BE REPLACED	**PARTS TO BE ORDERED**	**OPERATIONS AND NOTES**
ECU Immobilizer	• KIT ECU Including: Immobilizer ECU - 2 keys to be cut New Code Card	⇒ Cut the keys according to the mechanical code. ⇒ Perform "Key memorising" in Immobilizer diagnostics (*). **NB.** At the end of this operation, check that the electronic code shown on the screen corresponds to the one printed on the Code Card, if it is different, put the one on the screen on the Code Card. ⇒ In EDC diagnostics perform "new key recognition". ⇒ Put the old mechanical code on the new Code Card. ⇒ Scrap the old keys as it will be NO LONGER possible to use them. ⇒ Complete the "New Immobilizer Installation Form" printing it from MODUS and send it as mentioned in the ORDER MANAGEMENT form of the IVECO SPARES warehouse concerned.
EDC control unit	• EDC control unit	⇒ The system recognises the new actuator automatically the first time the ignition key is moved to Drive. **NB.** To order the EDC Control Unit complete the specific form printing it from Modus and sending it to the Market Technical help Desk.

(*) With MODUS 2.0 (Windows), 1.6C (DOS) or IWT 1.4 release before performing "New key memorising", it is absolutely necessary to disconnect the DDS or EDC actuator. Once the operation has been completed, clear the fault memory to prevent the error from staying memorised on the actuator.

⇒ For subsequent releases keep to any new instructions given on the screen.

Diagnostics through Modus

Use adapter 99331043 (A).

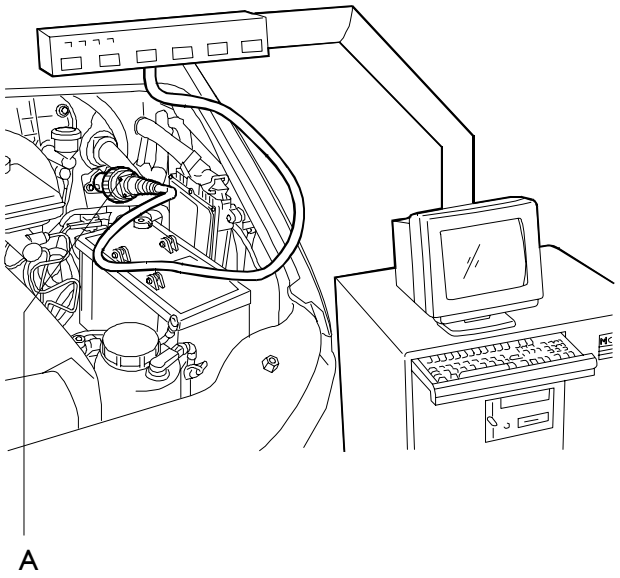

IV.7 DIAGNOSTICS THROUGH MODUS

Diagnostics through IWT

Use adapter 99331043 (A).

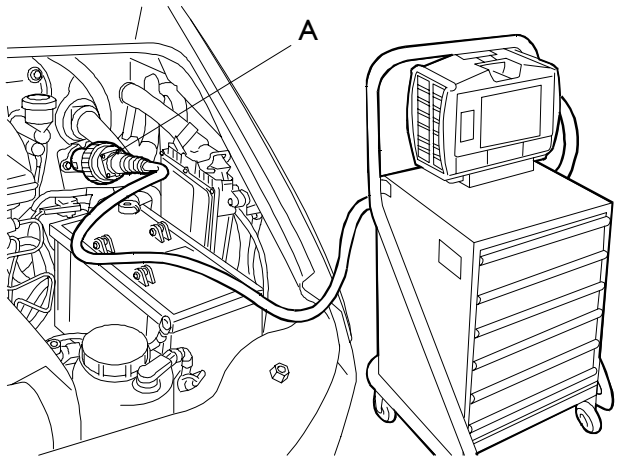

IV.8 DIAGNOSTICS THROUGH IWT

ABS/EBD/ABD

General

The braking of a vehicle in motion and the consequent deceleration and stopping space mainly depend on the grip between the tyre surface and the type of road surface.

With a perfectly efficient braking system, further improvement of braking can be obtained only acting on the tyre friction characteristics or on the quality of the road surface.

Even in these optimum conditions, absolute braking safety is not however guaranteed when needing to cope with particular critical situations, such as low grip due to the conditions of the wet or icy road surface: this compels the driver to moderate the braking action to prevent one or more wheels from partially locking, with the possibility of dangerous skidding.

The friction between the tyre and the road surface does not correspond to the friction between rigid bodies but to the skidding (or slipping) between the tyre and the road in the contact area.

Fig. IV.9 shows the indicative trend of the longitudinal "μl" and transversal "μt" rip coefficients in relation to the percentage of slipping "S".

The diagram reveals that the maximum value of the longitudinal grip coefficient is not when the wheel is locked, but for a much lower slipping value.

Therefore, the road-tyre grip can be exploited to optimise longitudinal or transversal control of the vehicle. Namely, it is possible to utilise the grip trying to make the braking distance as short as possible or to ensure the best possible handling.

An excellent compromise is obtained using slip rates near the point S* in which there is a high μl value which ensures optimum braking and a μt value that offers good lateral roadholding.

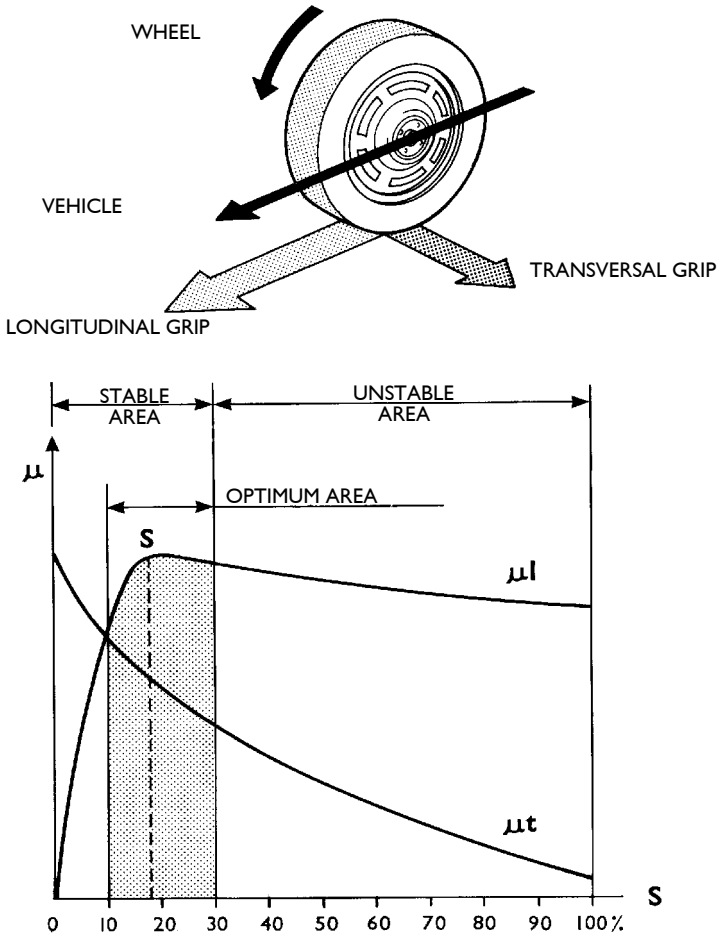

IV.9 TREND OF WHEEL LONGITUDINAL AND TRANSVERSAL GRIP IN RELATION TO SLIPPING

In order to better understand the logic of the system and the parameters that govern it a few basic concepts should be briefly examined.

Due to the effect of the braking action the tyre, that before was rolling freely, undergoes a deformation, called "braking" deformation, in its area of contact with the road and slows down rotation reducing its peripheral speed, to a higher extent than the linear speed of the vehicle.

At the limit, with the wheels completely locked under the braking action, and thus with a wheel peripheral speed of zero, there is the maximum deviation between the wheel rotation speed and the linear speed of the vehicle.

Slipping varies its values within the limits set by the two extreme conditions in which the wheel and vehicle speed may be in.

When the wheel is free, not braked, thus turning at the same speed as the vehicle, the slipping coefficient is 0%.

When the braked wheel is completely locked and the vehicle continues moving forwards due to inertia, the skidding coefficient amounts to 100%.

Experimentation has made it possible to establish that the most effective braking condition is obtained for optimum slipping values contained between about ~ 5% and 20%.

The need to contain the slipping values within precise limits is imposed by the behaviour of the tyres under the braking action, during which the braking friction coefficient comes into play.

The higher this coefficient, the more braking is effective.

If the relation between slipping S and the friction coefficient U is represented on Cartesian axes μ, (Fig. IV.10) we see how there are the highest friction coefficient values for slipping values between an average of 5% and 20%.

As the friction coefficient is directly proportionate with the applicable braking force, the result is that the "ABS" device acts in such a way as to apply the maximum braking force exactly in correspondence with the best friction coefficient, and this system tends to bring any type of vehicle within this sector.

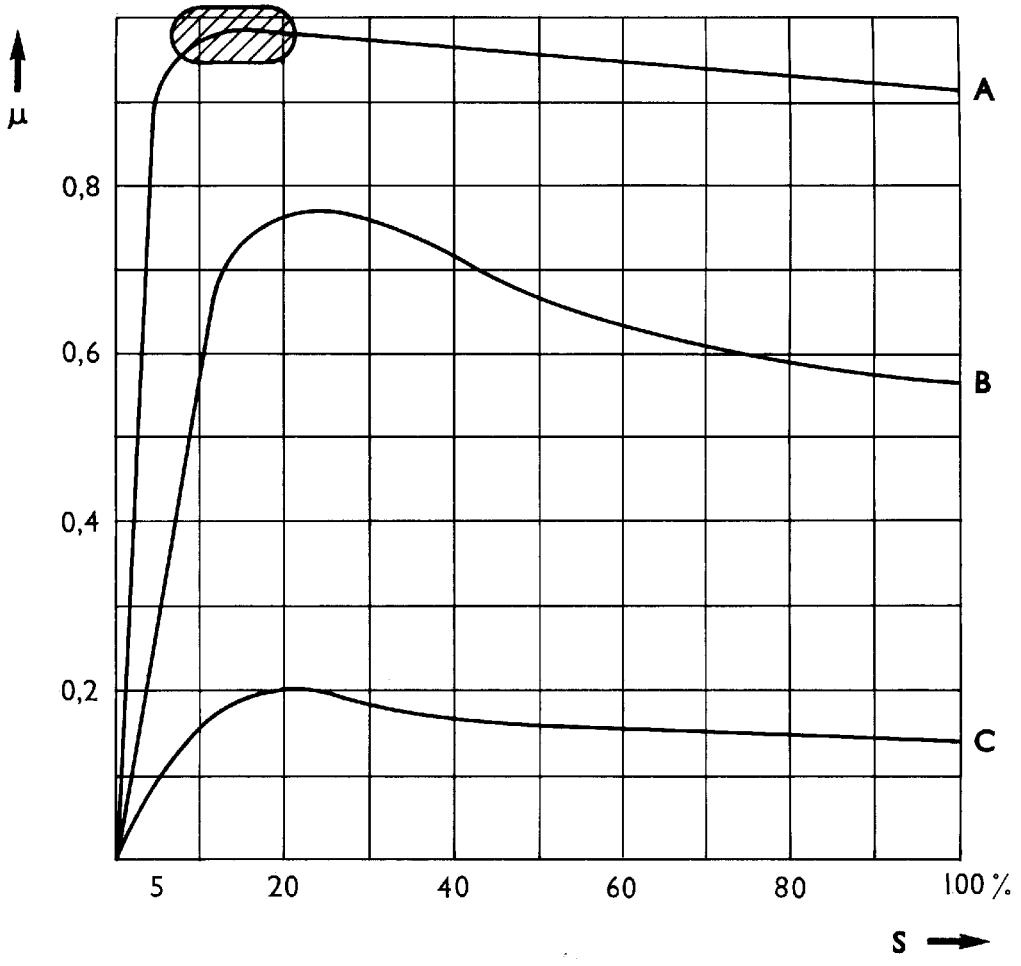

IV.10 FRICTION COEFFICIENT - **S.** SLIPPING **%** - **A.** DRY ASPHALT - **B.** WET ASPHALT - **C.** ICE

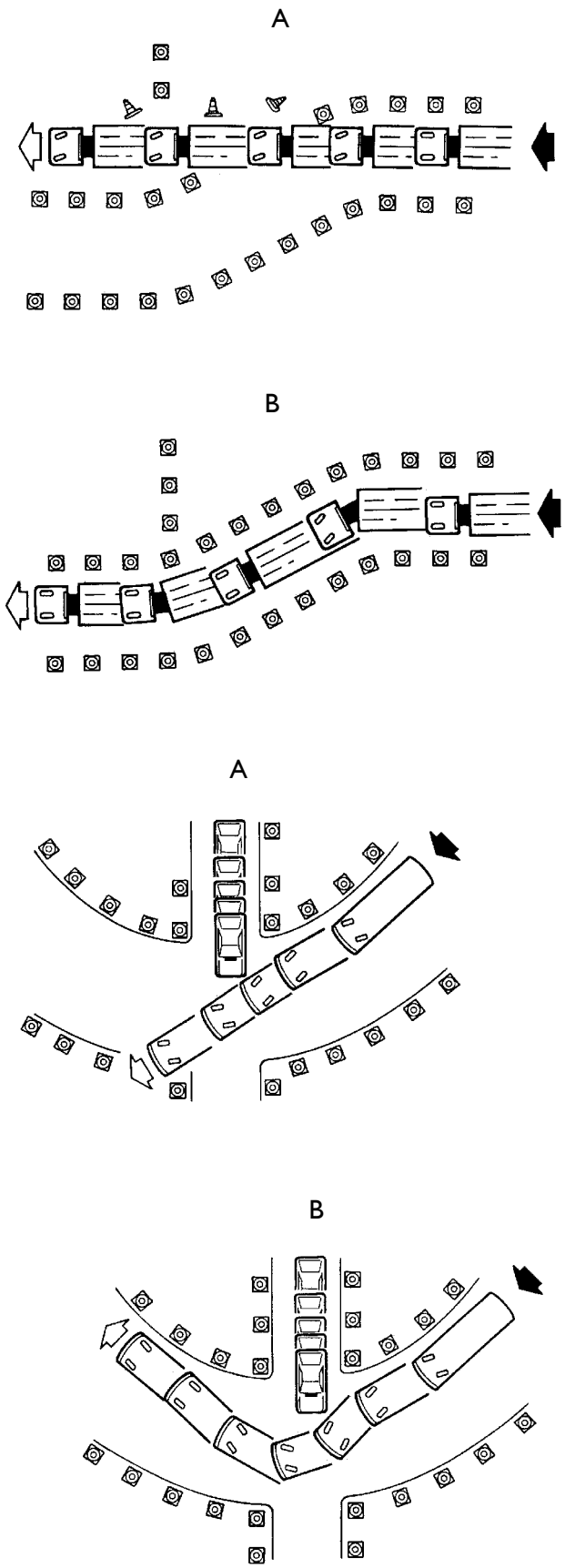

IV.11 VEHICLE BRAKING TREND WITHOUT AND WITH ABS
A. VEHICLE WITHOUT ABS
B. VEHICLE WITH ABS

The locking of one or more wheels, due to excessive pressure on the brake pedal, (anyway higher than allowed by the grip) can cause loss of steering control of the vehicle if both front wheels lock, skidding, resulting in about-facing, if both rear wheels lock.

The need for abrupt braking on a bend, compels the driver to immediate action to avoid losing control of the vehicle, resulting in skidding.

Lastly, the so-called panic braking (caused by a sudden obstacle), compels the driver to press the brake pedal as forcibly as possible in the desperate attempt to stop in time..

So what is the solution even for the most expert drivers?

Being able to avail of a braking system capable of fully exploiting all the grip available without locking the wheels, except at a minimum pre-established speed.

The ABS Antibrake Locking System has been developed exactly to obtain this.

A device inserted in the braking system, with the task of preventing wheel locking when the brake operating pressure is too high in relation to the grip of the tyre on the ground.

Therefore, the purpose of the "ABS" device is to ensure vehicle stability (under all braking conditions) preventing locking of the wheels regardless of the conditions of the road surface, thereby ensuring total use of the grip available.

Also in the vent of emergency braking, the system makes it possible to maintain "steerability" of the vehicle, i.e. acting on the steering to avoid obstacles, without the danger of skidding.

Keeping the rotation and grip of the wheels within the optimum parameters, the system makes it possible to obtain those braking distances that only an expert driver would be able to approach; this way even the less expert driver is able to act like one of the best.

The diagram opposite shows some examples of braking without ABS and with ABS.

In order to be able to intervene effectively the system must not only be precise in response, but also very quick.

This is now possible thanks to electronic information which warrants reliability, precision and rapidity, with a minimal number of components and lower system cost.

In addition to the ABS, the system in question also incorporates the EBD and ABD functions.

EBD - Electronic Brake Force distribution

This device replaces and optimises the function of the present hydraulic braking action proportioning valve, better controlling the braking force on the rear wheels.

It is obtained by adding specific software to the ABS and it acts in a determinate interval before the cutting in of the ABS.

It ensures control on any locking of the rear wheels in relation to the front ones, optimising the braking force in the different load, driving and conditions of use of the vehicle.

ABD - Automatic Brake Differential

This device comes into action automatically braking the driving wheel that has less grip when moving off or travelling and tends to skid transferring the torque through the differential to the wheel with higher grip. It cuts in up to a speed of about 40 km/h and does not interfere with the normal braking system.

It cuts in up to a speed of about 40 km/h and does not interfere with the normal braking system.

The driver is informed when this system is engaged by the flashing of th yellow warning light on the dashboard.

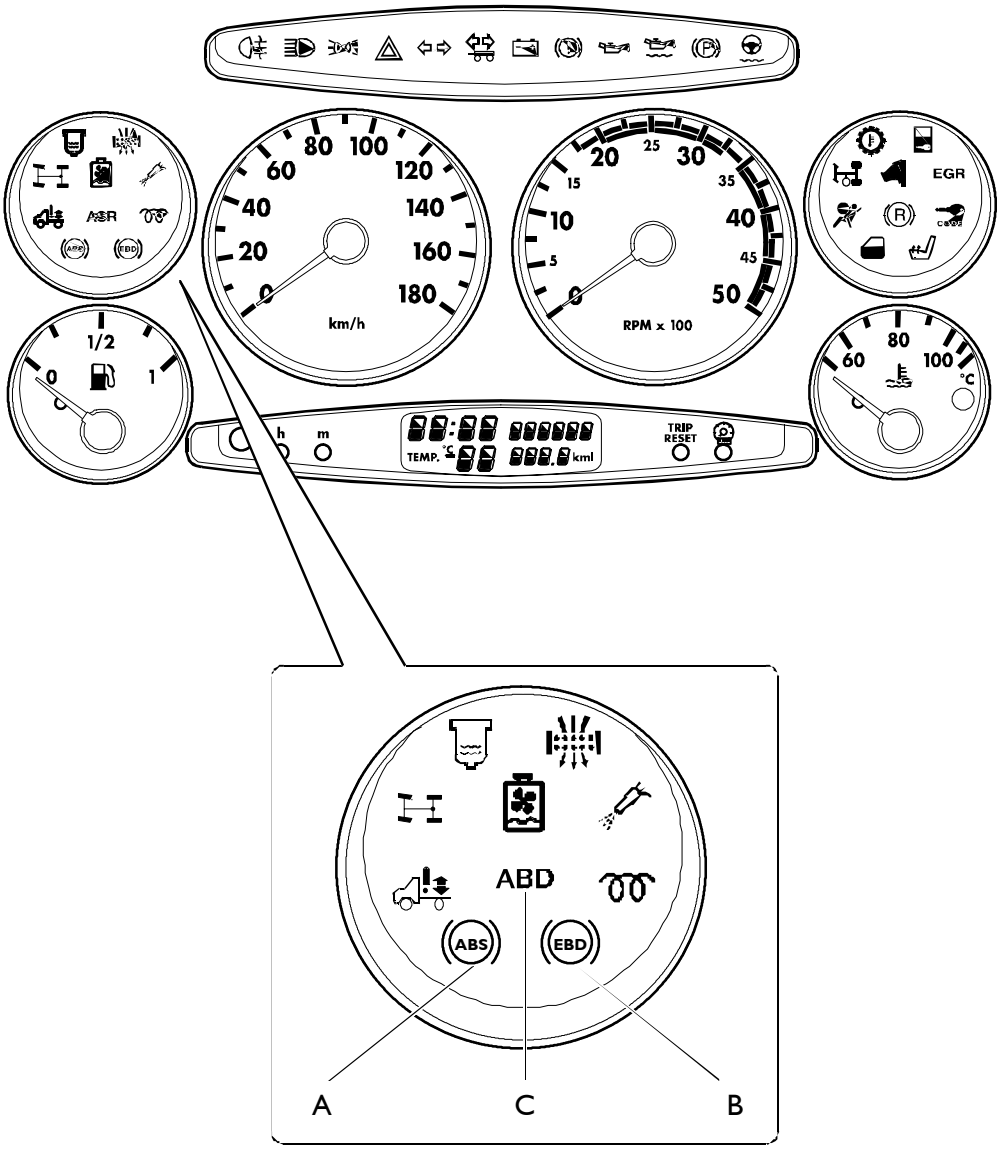

IV.12 SYSTEM WARNINGS ON DASHBOARD
A BS FAILURE WARNING LIGHT 58703 - **B.** EBD FAILURE WARNING LIGHT 58734 - **C.** ABD FAILURE WARNING LIGHT 58704

SYSTEM WITH 4 CROSSED CHANNELS (X)

The system shown in Fig. IV.13 is used on the following vehicles: 29 L - 35 S

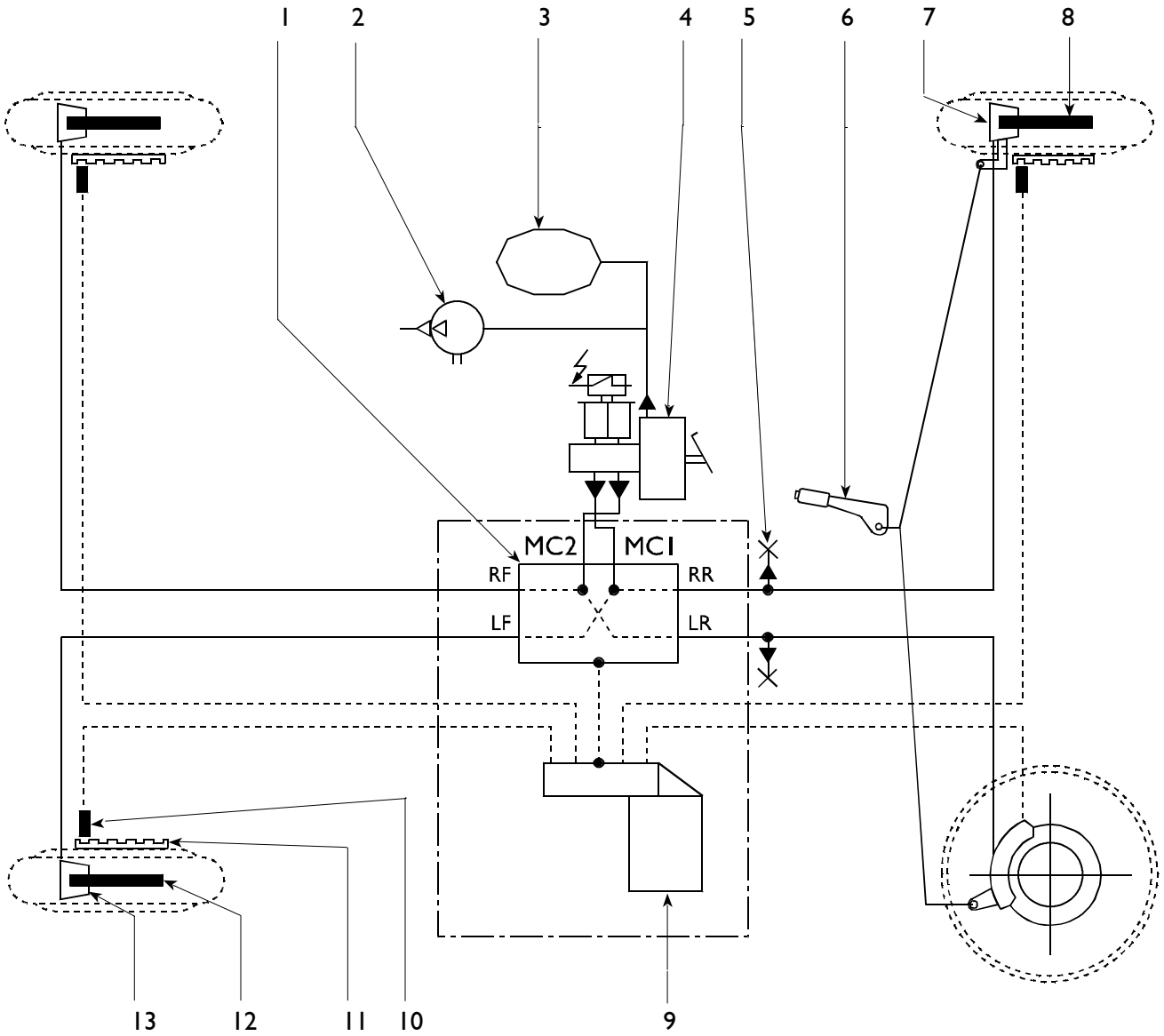

IV.13 **1.** ELECTROHYDRAULIC MODULATOR **- 2.** VACUUM PUMP **- 3.** VACUUM TANK **- 4.** VACUUM SERVOBRAKE **- 5.** HYDRAULIC CONTROL SOCKETS **- 6.** PARKING BRAKE LEVER **- 7.** REAR BRAKE CALIPER **- 8.** REAR DISK BRAKE **- 9.** ELECTRONIC CONTROL UNIT **- 10.** SENSOR **- 11.** PHONIC WHEEL **- 12.** FRONT BRAKE DISK - **13.** FRONT BRAKE CALIPER

Location of components

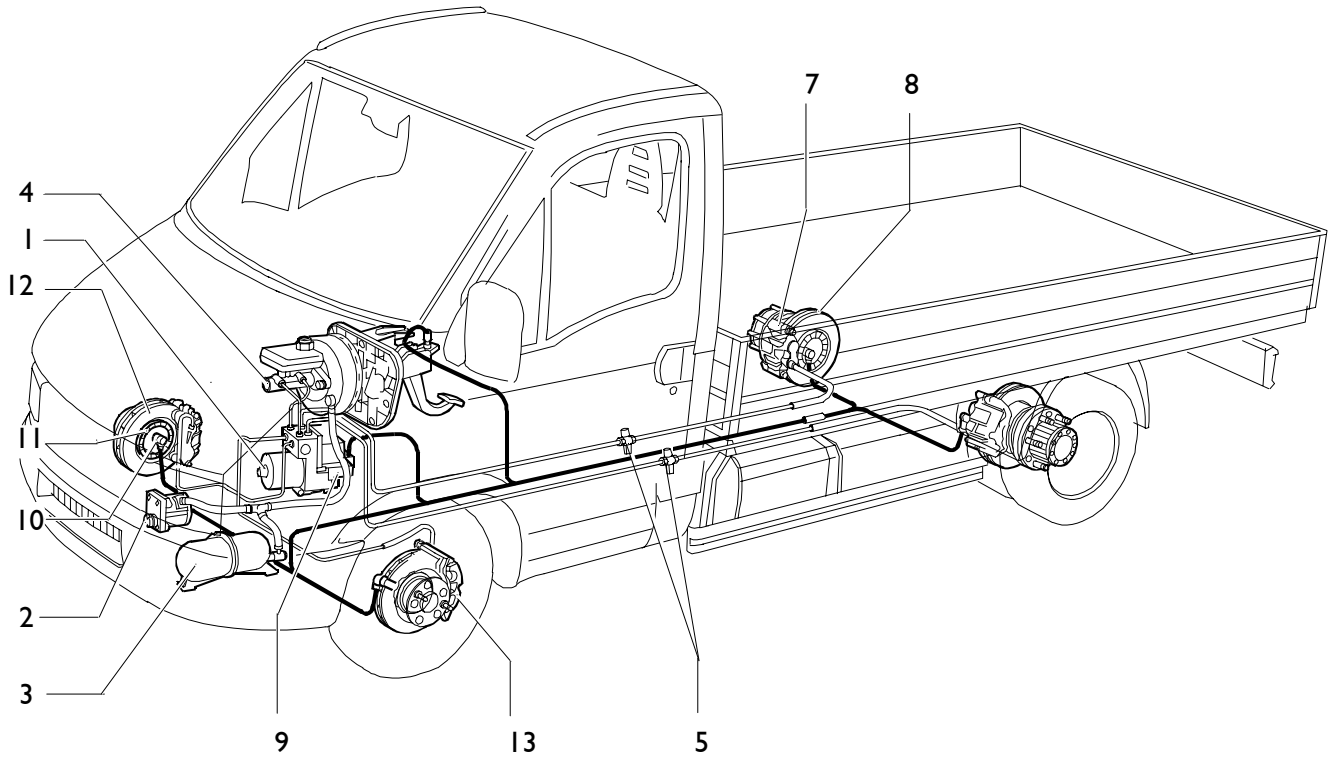

IV.14 **1.** ELECTROHYDRAULIC MODULATOR **- 2.** VACUUM PUMP **- 3.** VACUUM TANK **- 4.** VACUUM SERVOBRAKE **- 5.** HYDRAULIC CONTROL SOCKETS **- 7.** REAR BRAKE CALIPER **- 8.** REAR DISK BRAKE **- 9.** ELECTRONIC CONTROL UNIT 88000 **- 10.** SENSOR 88001 **- 11.** PHONIC WHEEL **- 12.** FRONT BRAKE DISK **- 13.** FRONT BRAKE CALIPER

Sensor on phonic wheel

The sensors supply the electronic control unit all the useful information, with the necessary continuity, for it to be able to control the solenoid valves.

The signals are obtained by magnetic flux lines which are closed through the teeth of an iron toothed wheel facing the sensor and turned with the wheel (Fig. IV.15).

The passage from solid to hollow, due to the presence or absence of the tooth determines a change of the magnetic flux which is enough to create an electromotive force induced at the terminals of the sensor and thus an alternate electric signal, which is sent to the electronic control unit.

The distance between the sensor and the wheel, called gap, must clearly have a pre-established value so that correct signals are supplied (0,8 to ÷ 1,6 mm).

The resistance rating of each single sensor detected at the ends of the connector is between 1÷ 2 kΩ.

The toothed wheel is called phonic wheel because the signal it generates has the frequency of a sound wave.

The frequency of this signal serves to define the wheel rotation speed.

The changes of the frequency, i.e. the rapidity with which the signals follow one another serve to define the acceleration and deceleration values.

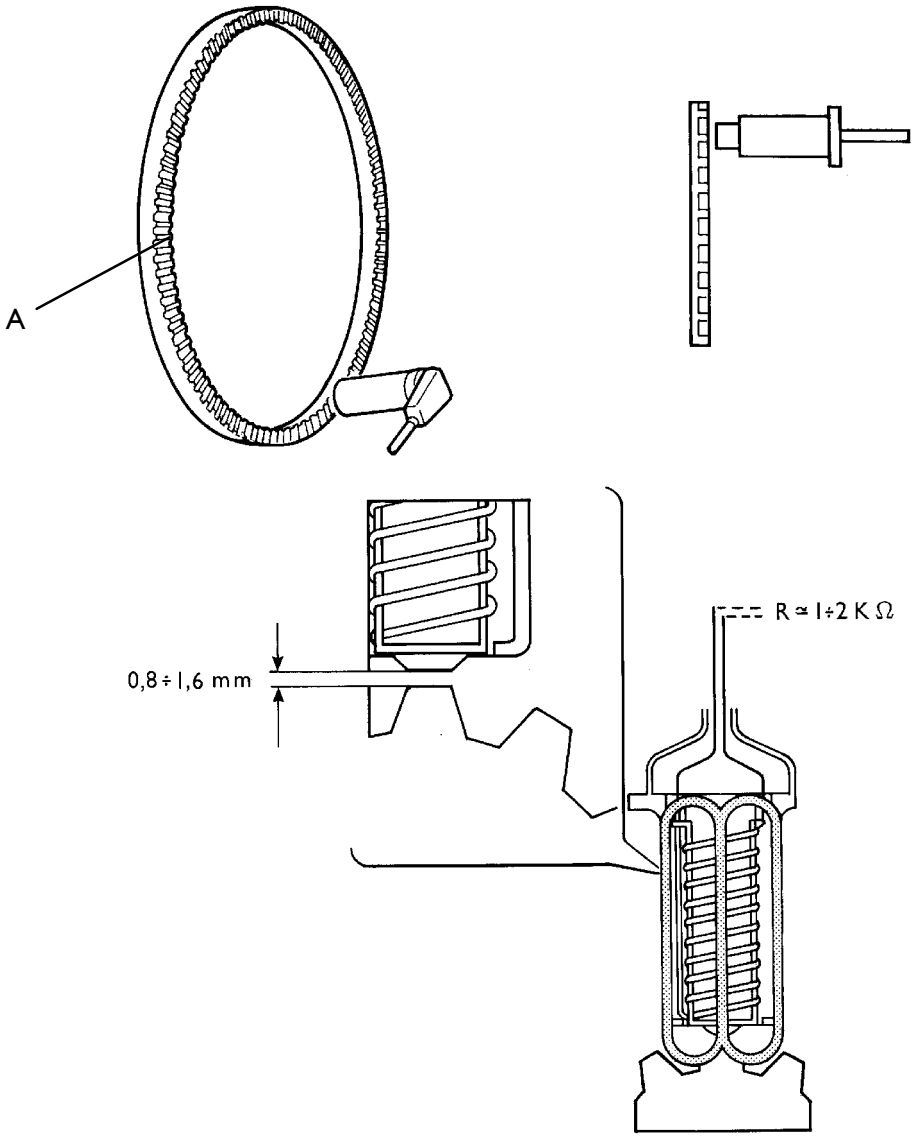

IV.15 SENSOR ON PHONIC WHEEL
A. PHONIC WHEEL

Electrohydraulic control unit/modulator

The component integrates both the electronic part and the hydraulic modulator for system management.

It comprises the following:

A - Electronic control unit

B - Electrohydraulic modulator

C - Accumulator

It is connected to the hydraulic system by the following connections:

MC1 - Diagonal supply LF/RR

MC2 - Diagonal supply RF/LR

LF - Left front axle output

RR - Right rear axle output

RF - Right front axle output

LR - Left rear axle output

It is connected to the electric system through a 31-pin connector.

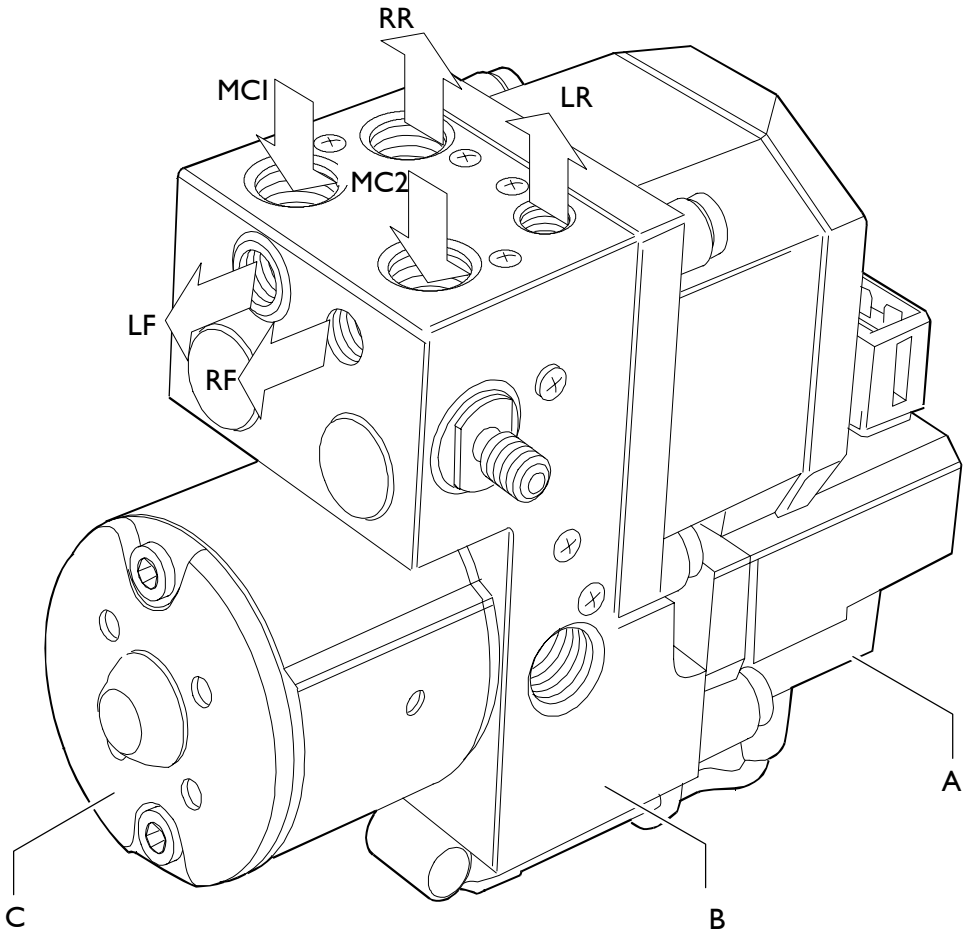

IV.16 CONTROL UNIT/ELECTROHYDRAULIC MODULATOR

Electrohydraulic modulator

Fig. IV.17 schematically shows the connection of the modulator and its internal components.

Pressure increase

Operating the brake pedal, the pressurised oil can reach the brake calipers as both the drive solenoid valves "6" and the supply solenoid valve "11" are open.

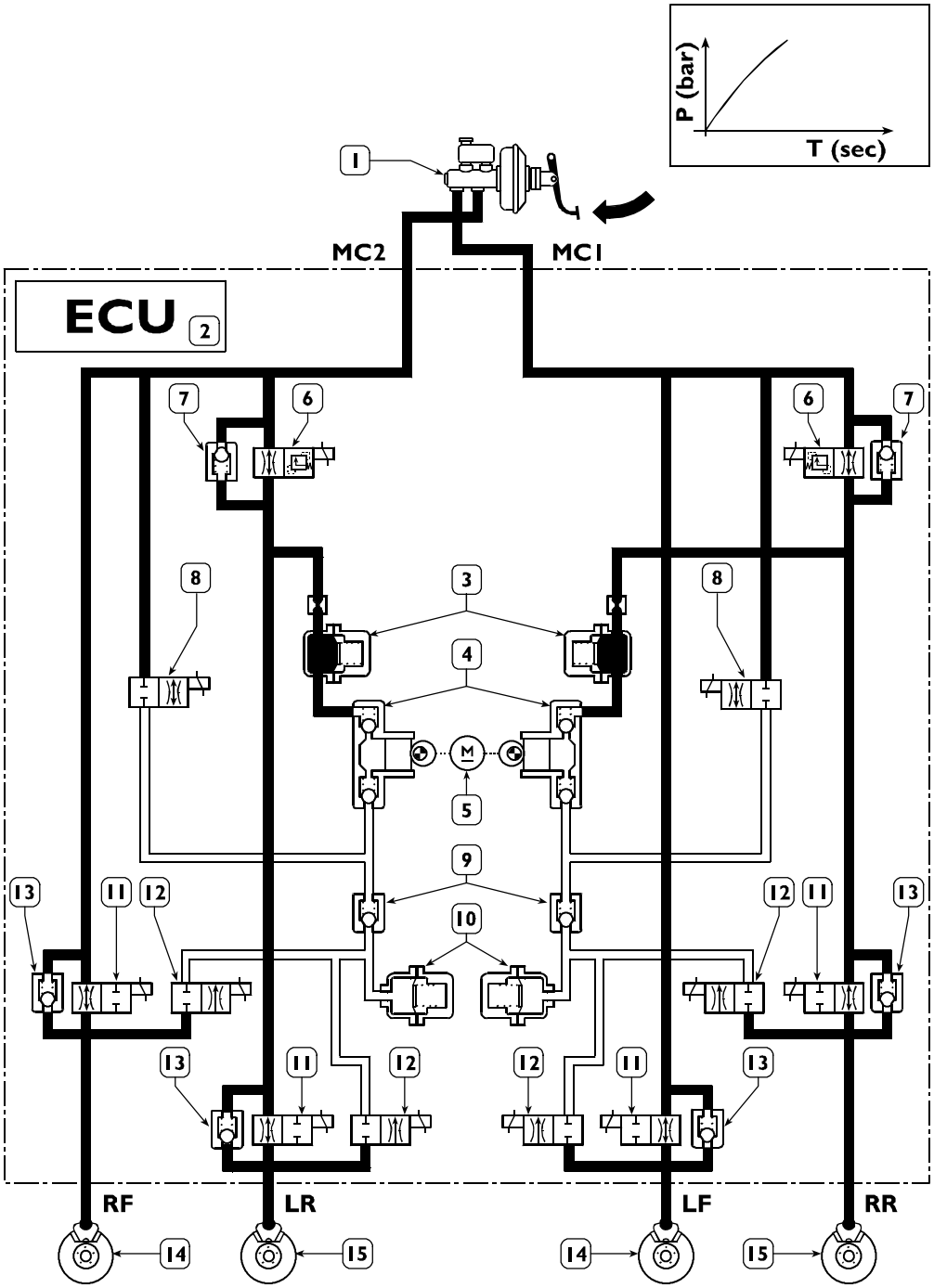

IV.17 **1.** VACUUM SERVOBRAKE - **2.** ELECTRONIC CONTROL UNIT - **3.** HIGH PRESSURE ACCUMULATOR - **4.** RECOVERY PUMPS - **5.** RECOVERY PUMP DRIVE MOTOR - **6.** ABD CONTROL SOLENOID VALVES (SETTING 90 BAR) - **7.** ONE-WAY SAFETY VALVES - **8.** ABD INTAKE SOLENOID VALVES - **9.** ABD ONE-WAY VALVES - **10.** LOW PRESSURE ACCUMULATOR - **11.** SUPPLY SOLENOID VALVES - **12.** DISCHARGE SOLENOID VALVES - **13.** ONE-WAY QUICK PRESSURE REDUCTION VALVES - **14.** FONT AXLE DISK BRAKES - **15.** REAR AXLE DISK BRAKES

Pressure lowering

If the sensors detect the tendency of a wheel or wheels to lock, they inform the control unit which reduces the braking force activating the supply solenoid valves "11" and the discharge solenoid valves "12".

At the same time, supplying the motor "5" that drives the pumps "4" it will be possible to recover the excess oil volume in the high pressure accumulators "3".

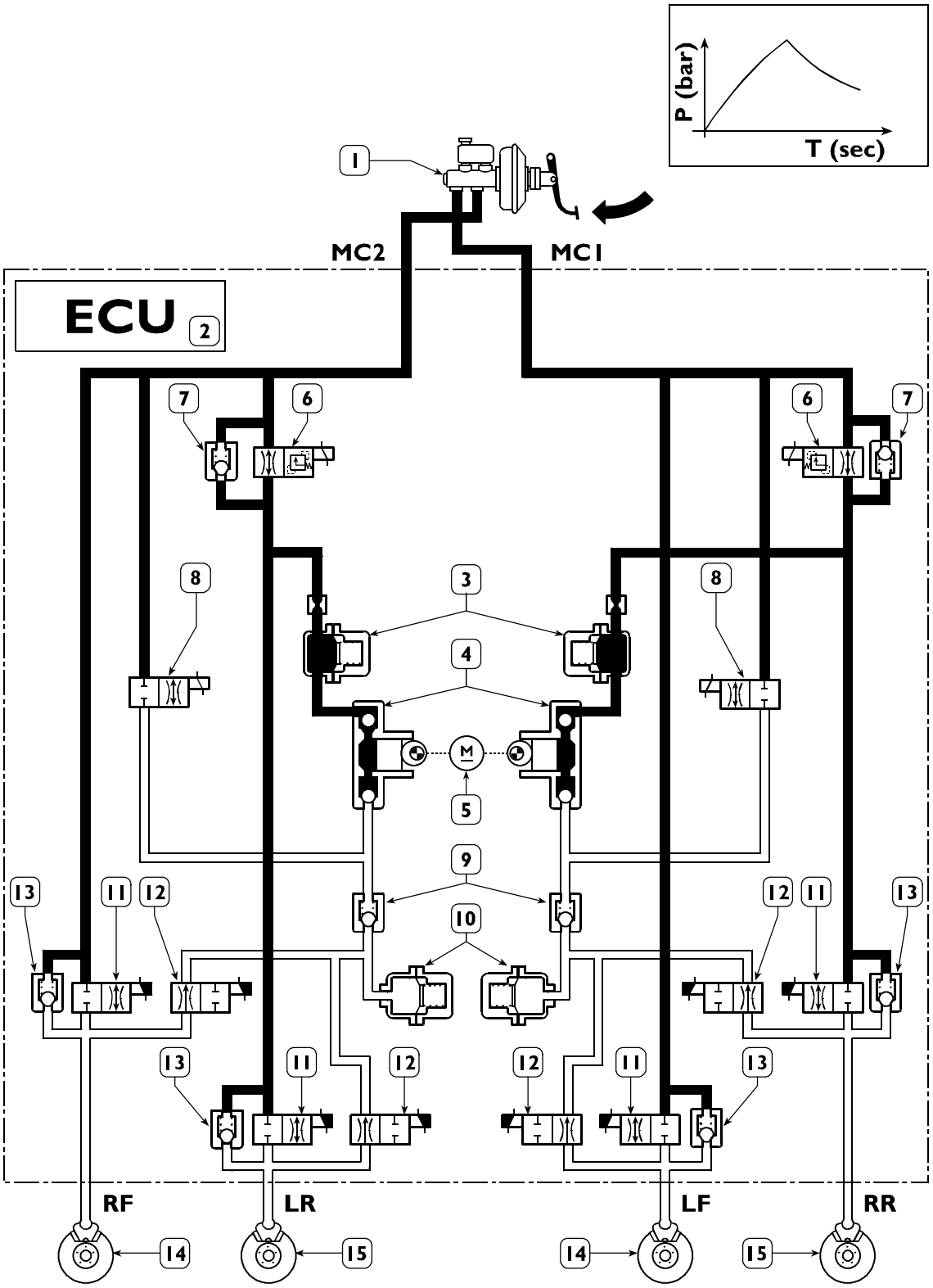

IV.18 SYSTEM OPERATING LAYOUT SHOWING THE PRESSURE MAINTENANCE PHASE

Pressure maintenance

Once the optimum braking force has been reached, the control unit can keep it constant, no longer energising the discharge solenoid valves "12", the motor "5" and the associated recovery pumps "4", while the supply solenoid valves "11" continue being supplied.

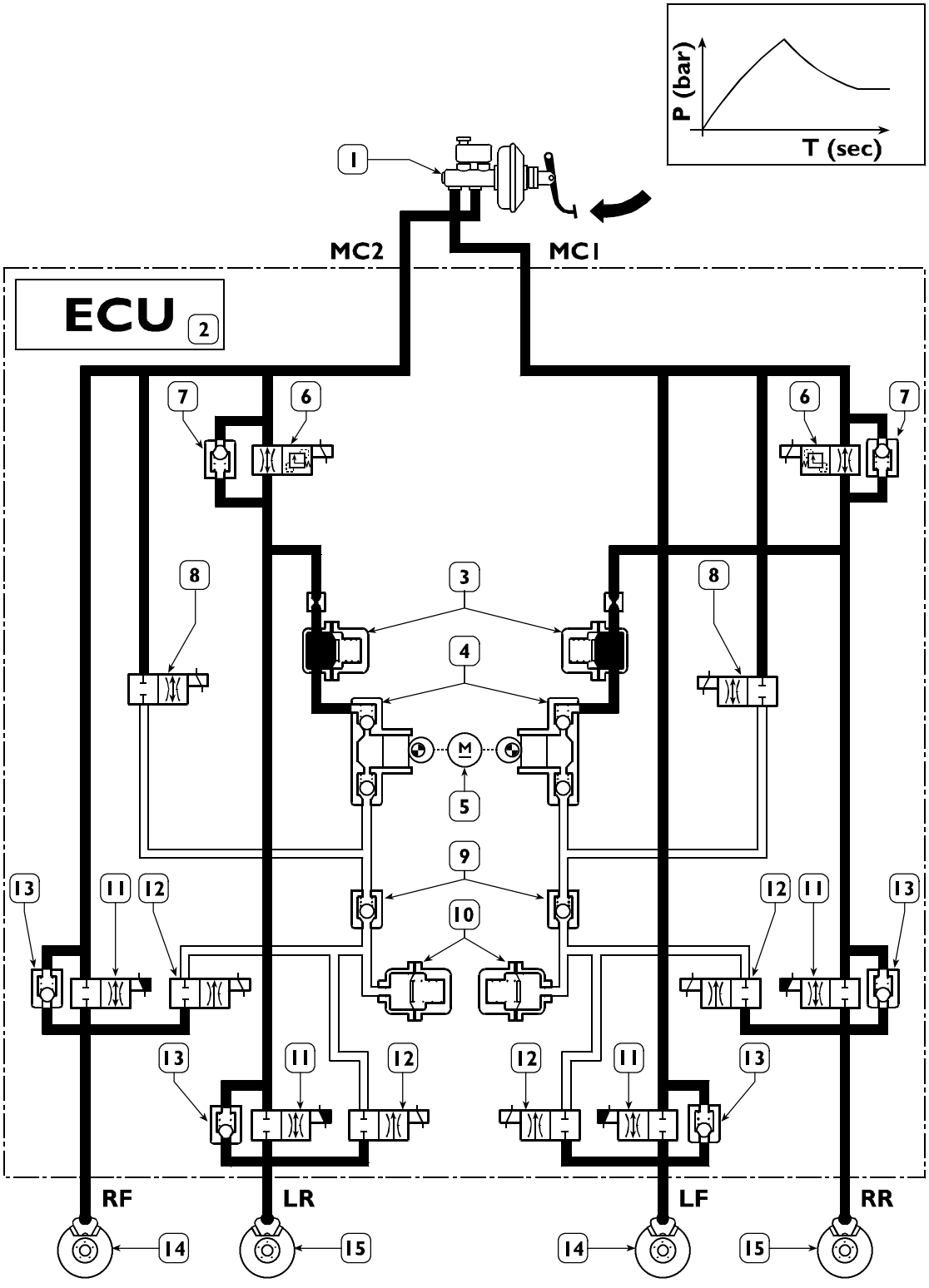

IV.19 SYSTEM OPERATING LAYOUT SHOWING THE PRESSURE MAINTENANCE PHASE

Cutting in of EBD device

If the sensors detect that one or both wheels tend to lock in relation to the front wheels, they inform the control unit which suitably supplies the supply solenoid valves "11" of the rear axle to optimise the braking force.

A fault on certain system components causes the ABS system to be cut off (displayed by turning on the special warning light), still leaving the EBD system operational.

If both failure warning lights turn on (ABS and EBD) this means an EBD system failure.

Under these conditions the braking force will not be distributed between the axles, therefore rear wheel locking may occur with the possibility of skidding.

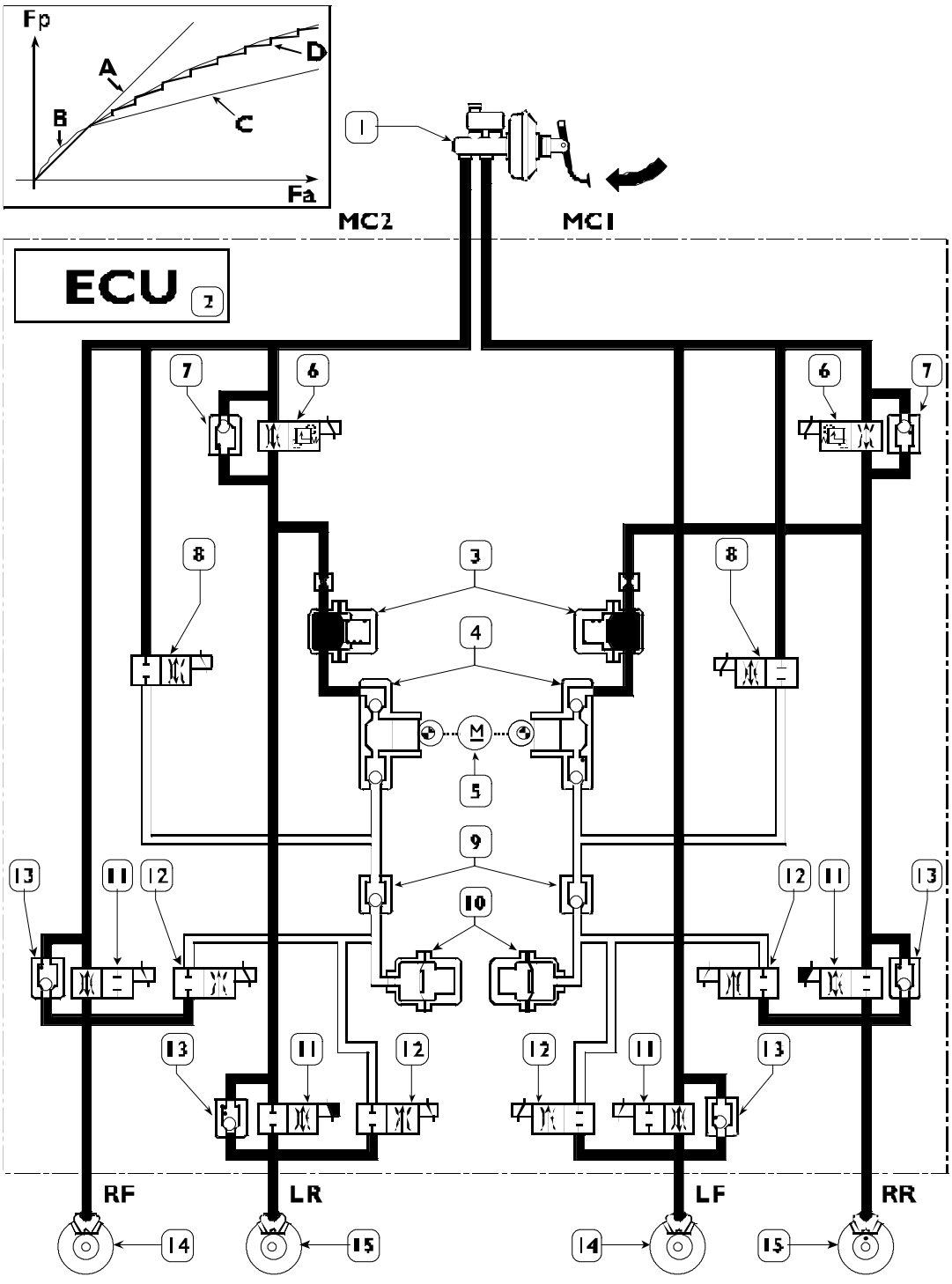

IV.20 **FP.** REAR AXLE BRAKING FORCE - **FA.** FRONT AXLE BRAKING FORCE - **A.** SERVOBRAKE DISTRIBUTION CURVE - **B.** IDEAL DISTRIBUTION - **C.** CURVE - DISTRIBUTION CURVE OF ANY PORPORTIONING VALVE - **D.** EBD SYSTEM DISTRIBUTION CURVE

Cutting in of ABD device

If the sensors detect that one or both rear axle wheels tend to skid, they inform the control unit which supplies the intake solenoid valves "8" and the drive valves "6".

At the same time, supplying the motor "5" which drives the pumps "4" it will be possible to generate the pressure to be sent to the brake calipers concerned.

The braking force generated in this manner is modulated by solenoid valves "11" and "12".

During this phase the maximum pressure is limited by the drive solenoid valves "6" and cannot exceed 90 bar.

The driver is informed of the cutting in of this system by the flashing of the corresponding warning light on the dashboard.

If the warning light turns on and glows steadily, there is an ABD system failure.

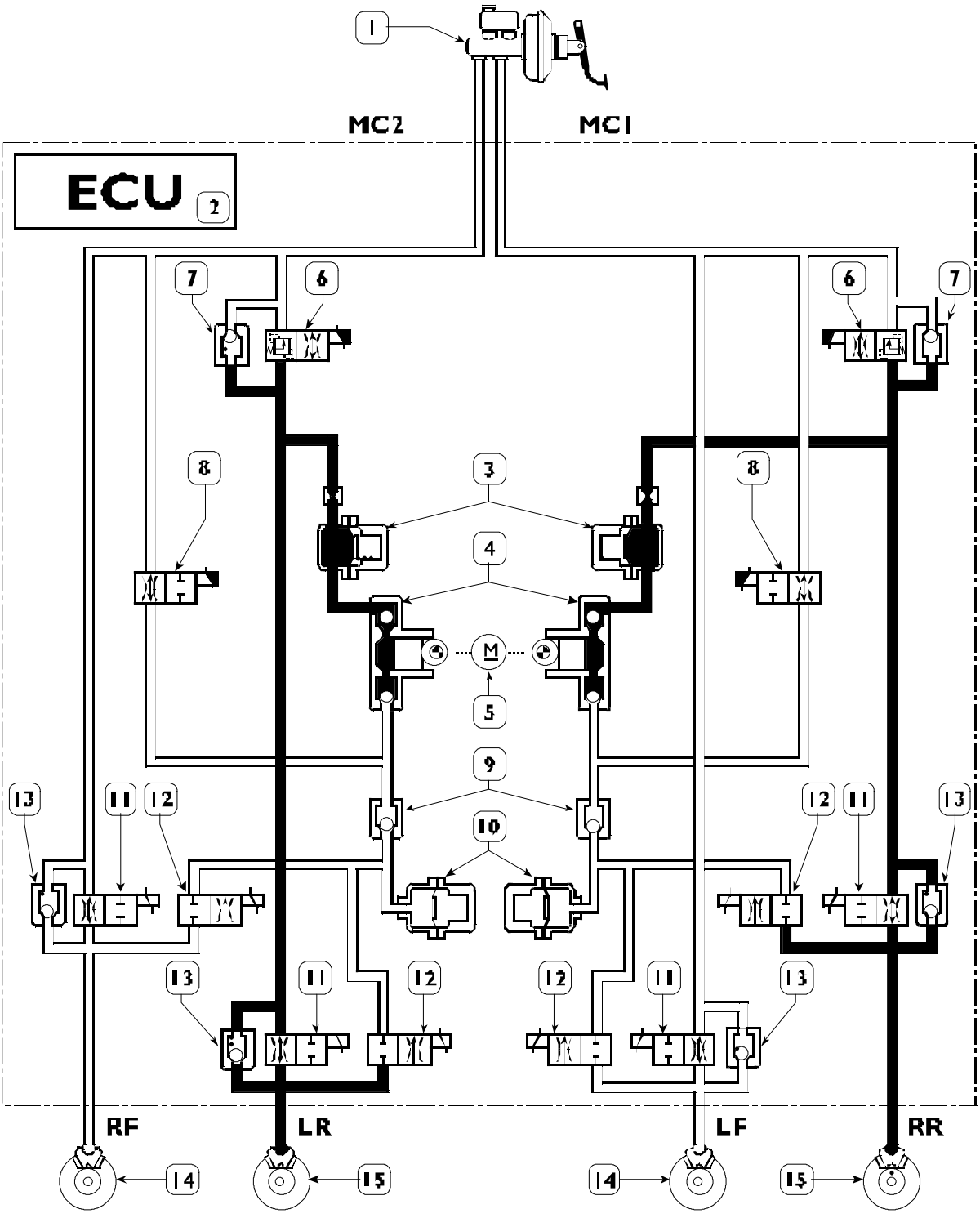

IV.21 ABD DEVICE OPERATING LAYOUT

SYSTEM WITH 4 PARALLEL CHANNELS (11)

The system shown in Fig. IV.22 is used on the following vehicles: 35 C - 40 C - 45 C - 50 C.

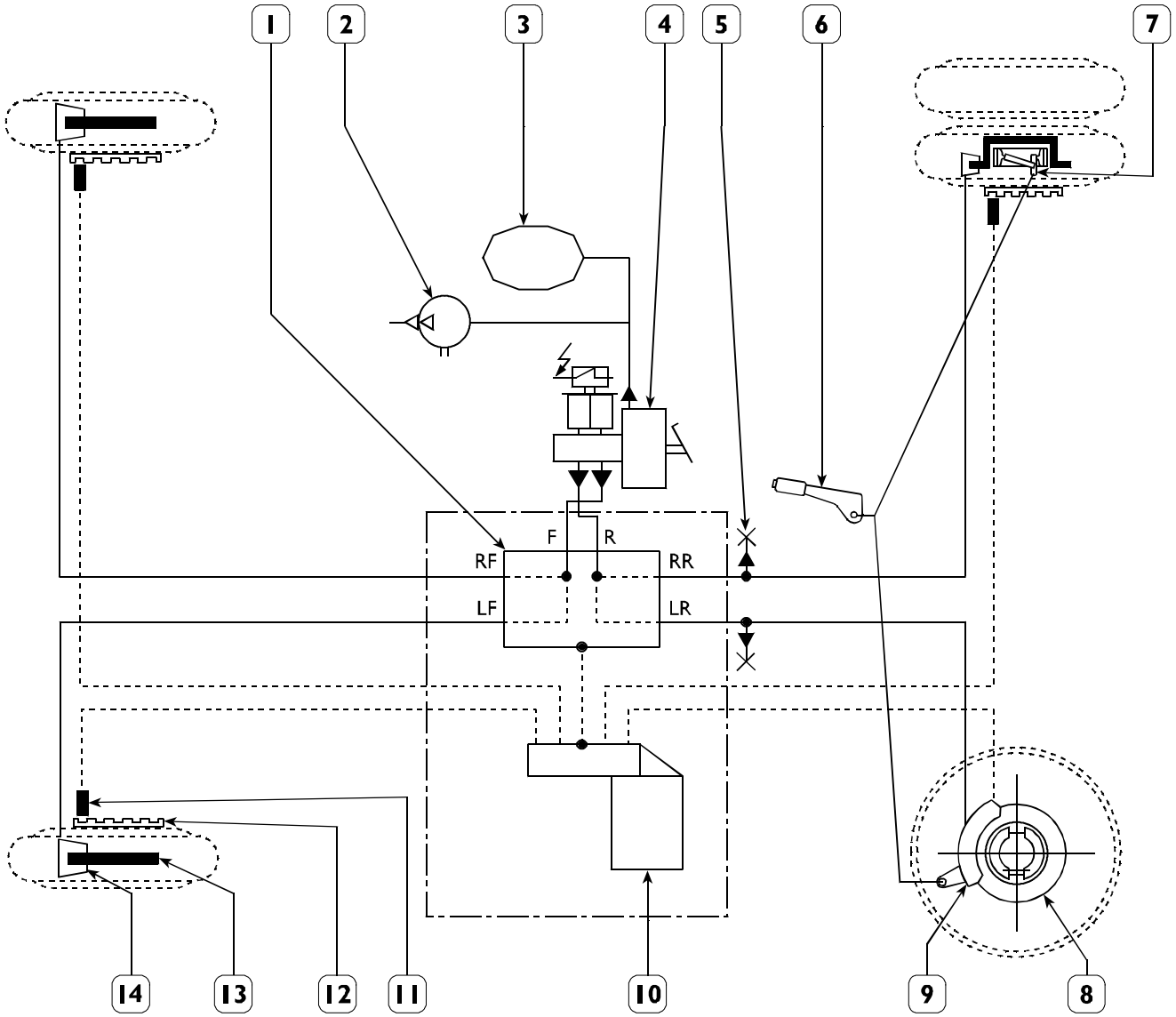

IV.22 **1.** ELECTROHYDRAULIC MODULATOR - **2.** VACUUM PUMP - **3.** VACUUM TANK - **4.** VACUUM SERVOBRAKE - **5.** HYDRAULIC CONTROL SOCKETS - **6.** PARKING BRAKE LEVER - **7.** PARKING DRUM BRAKE - **8.** REAR BRAKE DISK - **9.** REAR BRAKE CALIPER - **10.** ELECTRONIC CONTROL UNIT - **11.** SENSOR - **12.** PHONIC WHEEL - **13.** FRONT BRAKE DISK - **14.** FRONT BRAKE CALIPER

Location of components

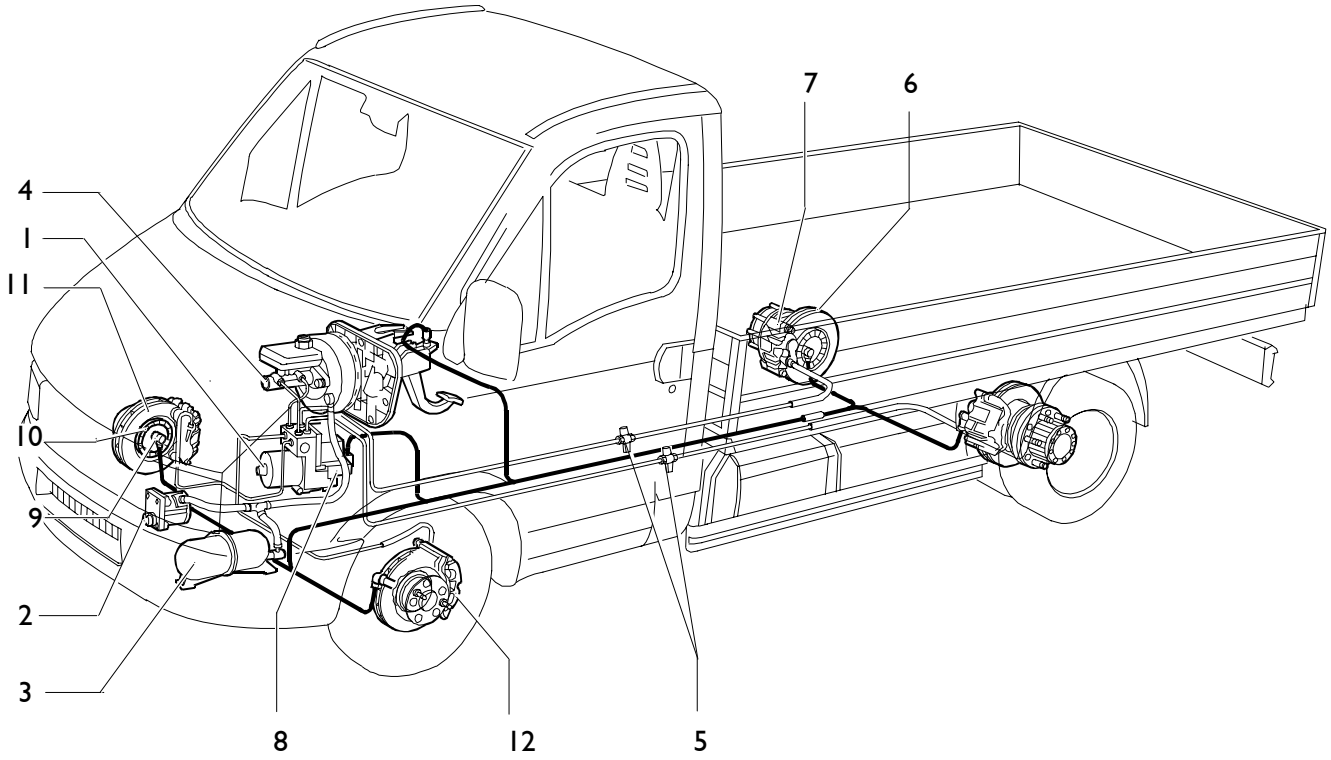

IV.23 **1.** ELECTROHYDRAULIC MODULATOR - **2.** VACUUM PUMP - **3.** VACUUM TANK - **4.** VACUUM SERVOBRAKE - **5.** HYDRAULIC CONTROL SOCKETS - **6.** REAR BRAKE DISK - **7.** REAR BRAKE CALIPER - **8.** HYDRAULIC CONTROL UNIT 88000 - **9.** SENSOR 88001 - **10.** PHONIC WHEEL - **11.** FRONT BRAKE DISK - **12.** FRONT BRAKE CALIPER

Electrohydraulic control unit/modulator

This component integrates both the electronic part and the electrohydraulic system control modulator.

It comprises the following:

A - Electronic control unit
B - Electrohydraulic modulator
C - Accumulator

It is connected to the hydraulic system by the following connections:

F - Front axle supply
R - Rear axle supply
LF - Left front axle output
RF - Right front axle output
LR - Left rear axle output
RR - Right rear axle output

It is connected to the electric system through a 31-pin connector.

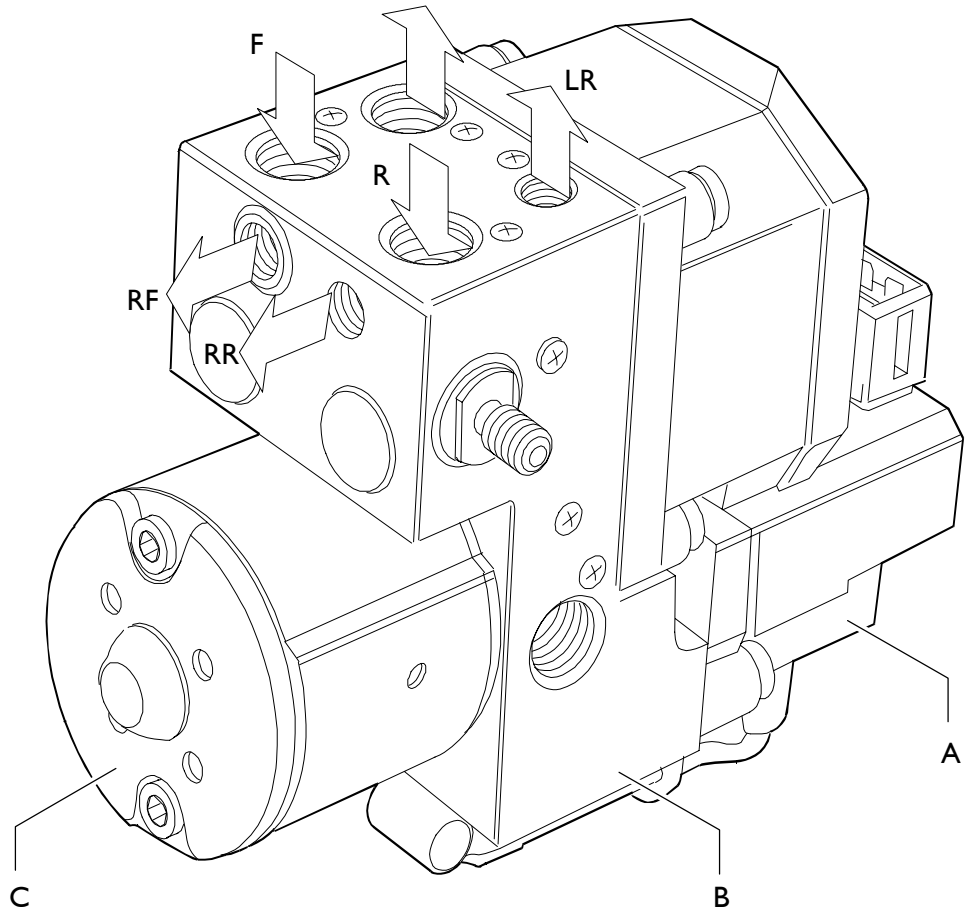

IV.24 CONTROL UNIT/ELECTROHYDRAULIC MODULATOR

Electrohydraulic modulator

Fig. IV.25 shows the layout of the connection of the modulator and its internal components.

Pressure increase

Operating the brake pedal, the pressurised oil can reach the brake calipers as both the drive solenoid valve "7" and the supply solenoid valves "12" are open.

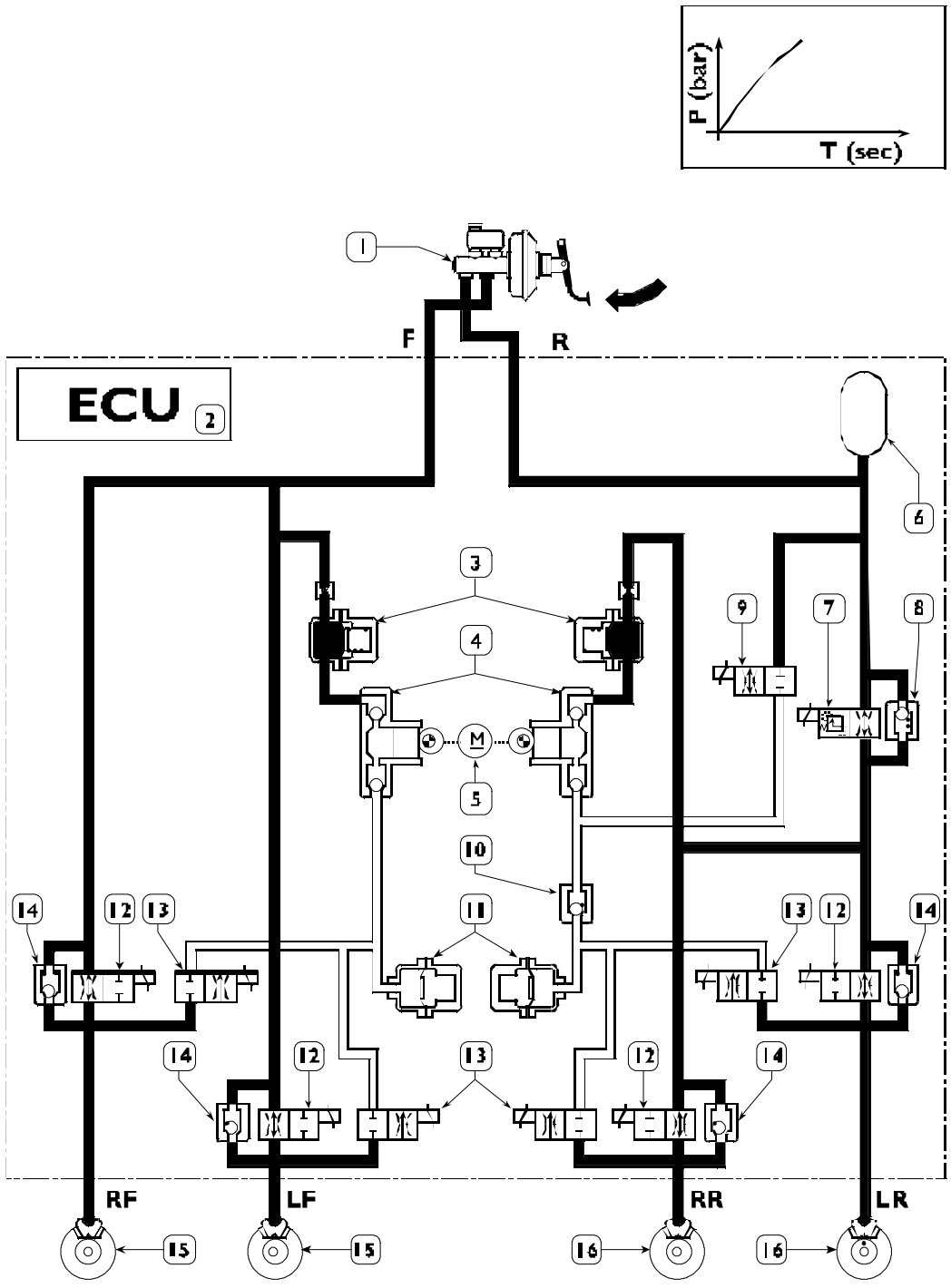

IV.25 **1.** VACUUM SERVOBRAKE - **2.** ELECTRONIC CONTROL UNIT - **3.** HIGH PRESSURE ACCUMULATORS - **4.** RECOVERY PUMPS - **5.** RECOVER PUMP DRIVE MOTOR - **6.** ACCUMULATOR FOR REAR AXLE SYSTEM - **7.** ABD DRIVE SOLENOID VALVE (90 BAR SETTING) - **8.** ONE-WAY ABD VALVE - **9.** INTAKE ABD SOLENOID VALVE - **10.** ABD ONE-WAY VALVE - **11.** LOW PRESSURE ACCUMULATORS - **12.** SUPPLY SOLENOID VALVES - **13.** DISCHARGE SOLENOID VALVE - **14.** ONE-WAY QUIDK PRESSURE RELIEF VALVES - **15.** FRONT AXLE DISK BRAKE - 16. REAR AXLE DISK BRAKES

Pressure reduction

If the sensors detect that a wheel or wheels tend to lock, they inform the control unit which reduces the braking force activating the supply solenoid valves "12" and the discharge solenoid valves "13".

At the same time, supplying the motor "5" which drives the pumps "4", it will be possible to recover the excess oil in the high pressure accumulators "3".

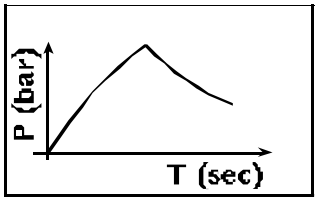

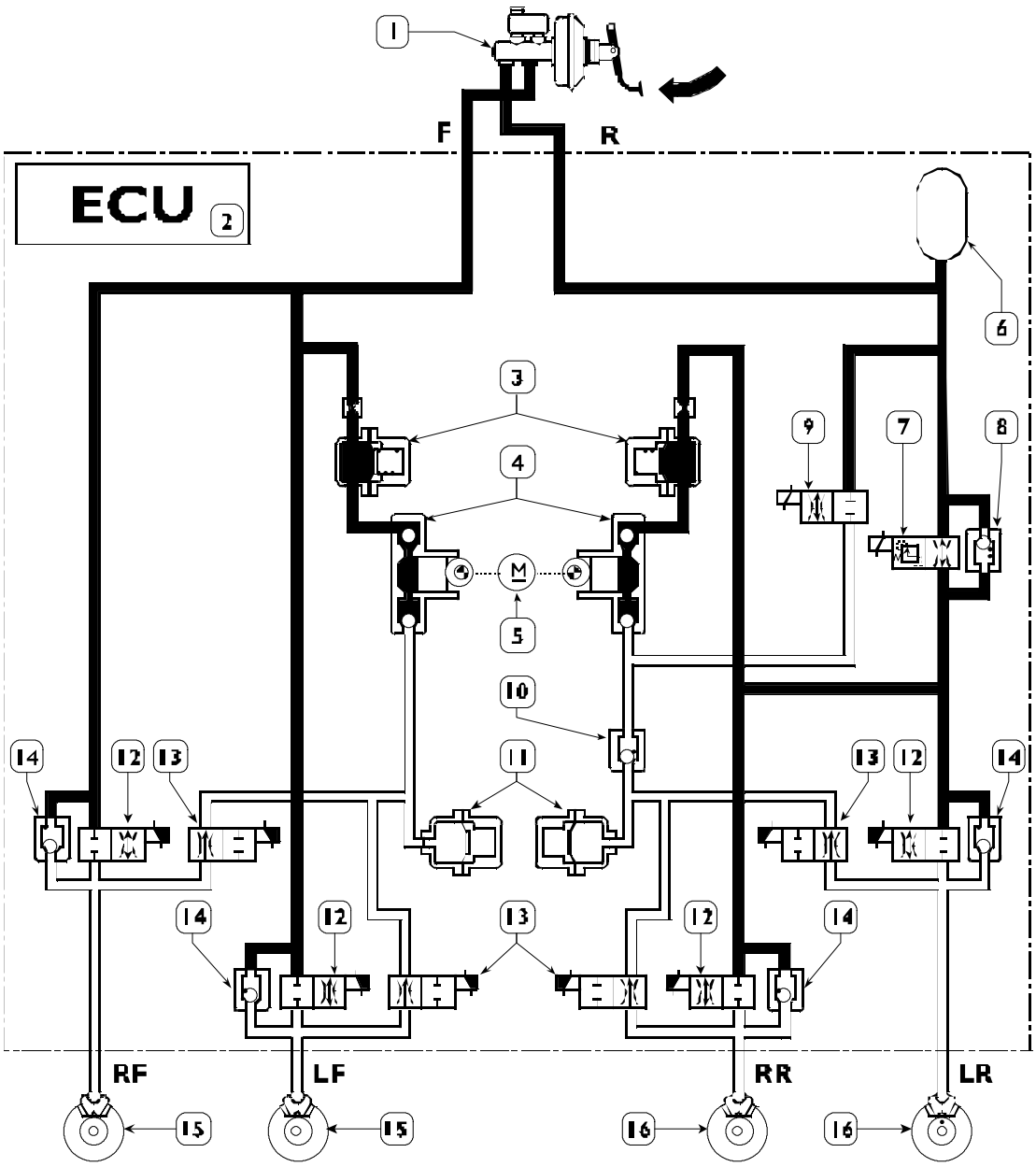

IV.26 OPERATING LAYOUT OF THE SYSTEM SHOWING THE PRESSURE REDUCTION PHASE.

Pressure maintenance

Once the optimum braking force has been reached, the control unit is able to keep it constant by no longer energising the discharge solenoid valves "13", the motor "5" and the corresponding recovery pumps "4"; while the supply solenoid valves "12" continue being energised.

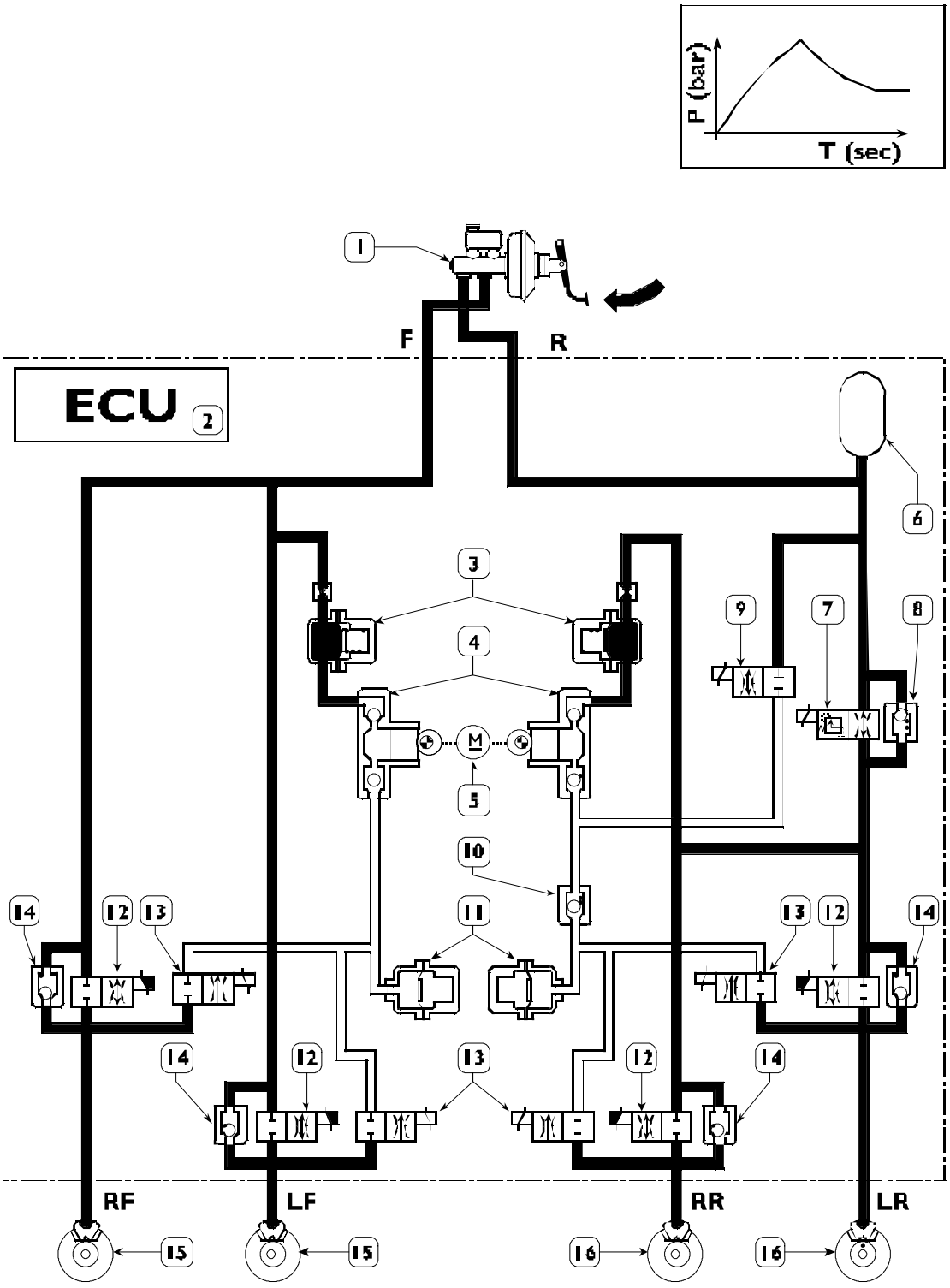

IV.27 OPERATING LAYOUT OF THE SYSTEM SHOWING THE PRESSURE MAINTENANCE PHASE

Cutting in of the EBD device

If the sensors detect that one or both rear wheels tend to lock in relation to the front wheels, they inform the control unit which appropriately supplies the supply solenoid valves "12" of the rear axle, in order to optimise the braking force.

A fault on certain system components causes the ABS system to be cut off (displayed by turning on the special warning light), still leaving the EBD system operational.

If both failure warning lights turn on (ABS and EBD) this means an EBD system failure.

Under these conditions the braking force will not be distributed between the axles, therefore rear wheel locking may occur with the possibility of skidding.

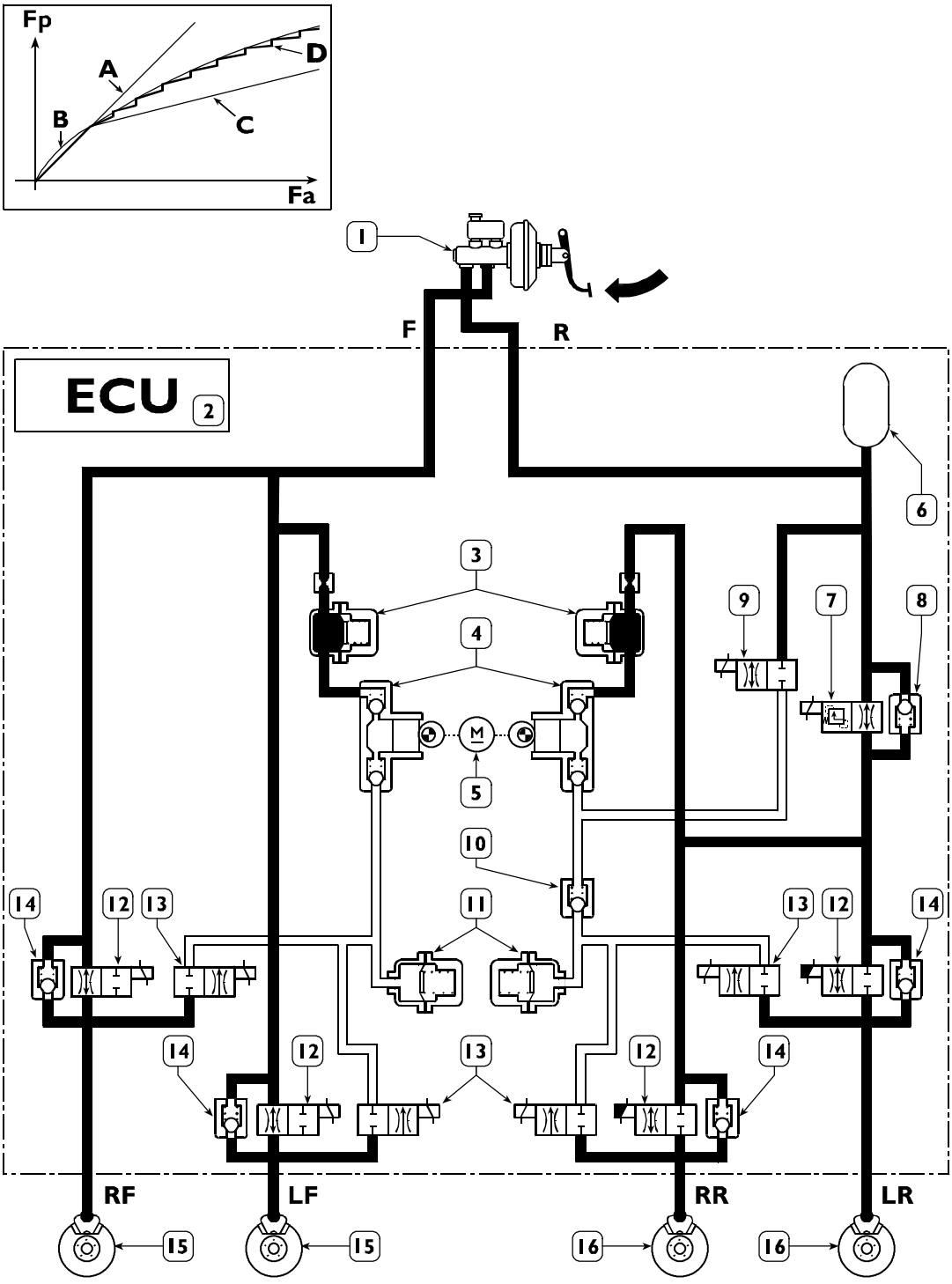

IV.28 **FP.** REAR AXLE BRAKING FORCE - **FA.** FRONT AXLE BRAKING FORCE - **A.** SERVOBRAKE DISTRIBUTION CURVE - **B.** IDEAL DISTRIBUTION CURVE - **C.** ANY PROPORTIONING VALVE DISTRIBUTION CURVE - **D.** EBD SYSTEM DISTRIBUTION CURVE

Cutting in of the ABD device

If the sensors detect that one or both rear axle wheels tend to skid, they inform control unit which supplies the intake solenoid valves "9" drive valves "7".

At the same time, supplying the motor "5" which drives the pumps "4" it will be possible to generate the pressure to be sent to the brake calipers concerned.

The braking force generated in this manner is modulated by solenoid valves "12" and "13".

During this phase the maximum pressure is limited by the drive solenoid valves "6" and cannot exceed 90 bar.

The driver is informed of the cutting in of this system by the flashing of the corresponding warning light on the dashboard.

If the warning light turns on and glows steadily, there is an ABD system failure.

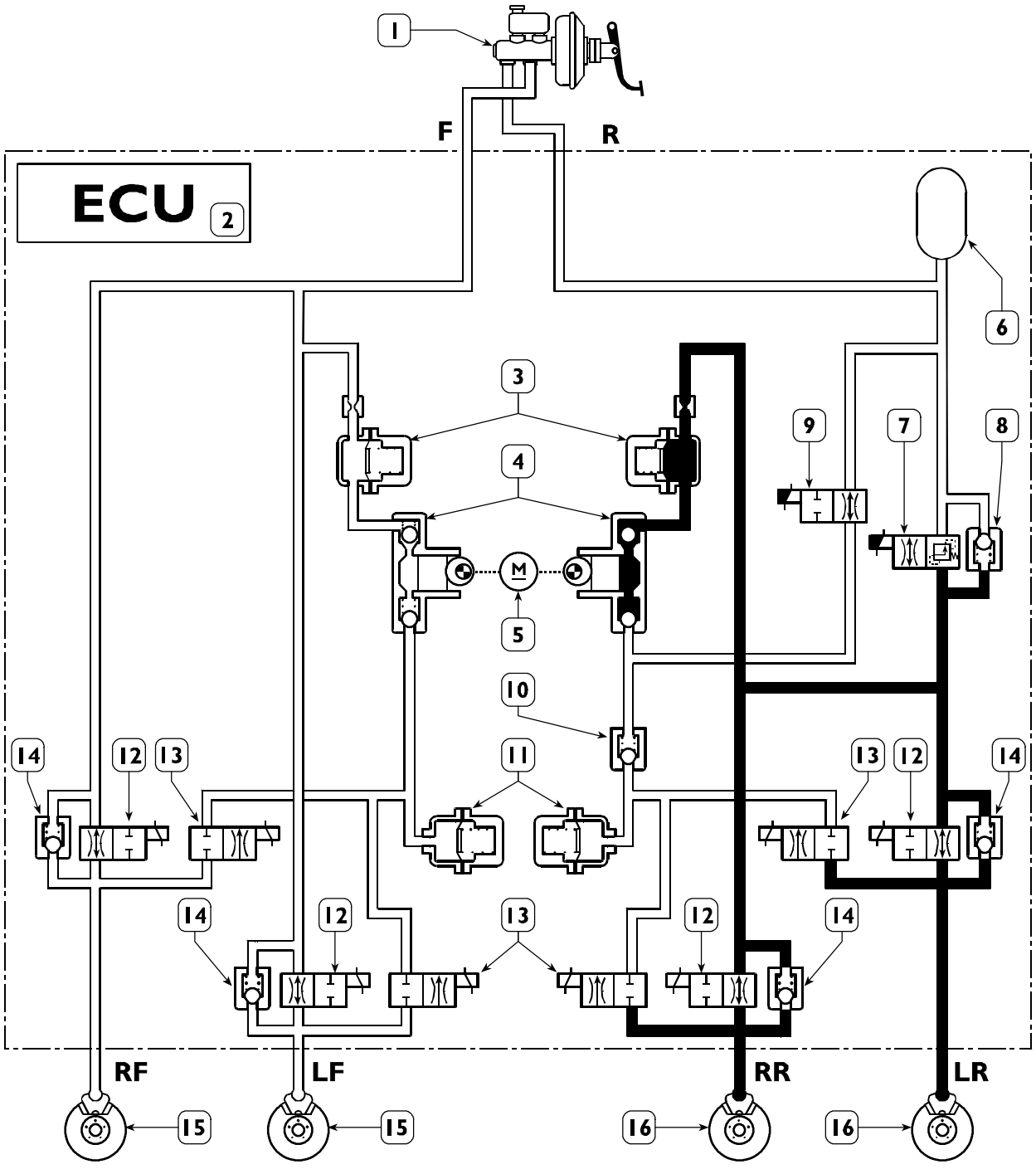

IV.29 ABD DEVICE OPERATING LAYOUT

Electronic control unit

The following table shows the pin out of the control units in question.

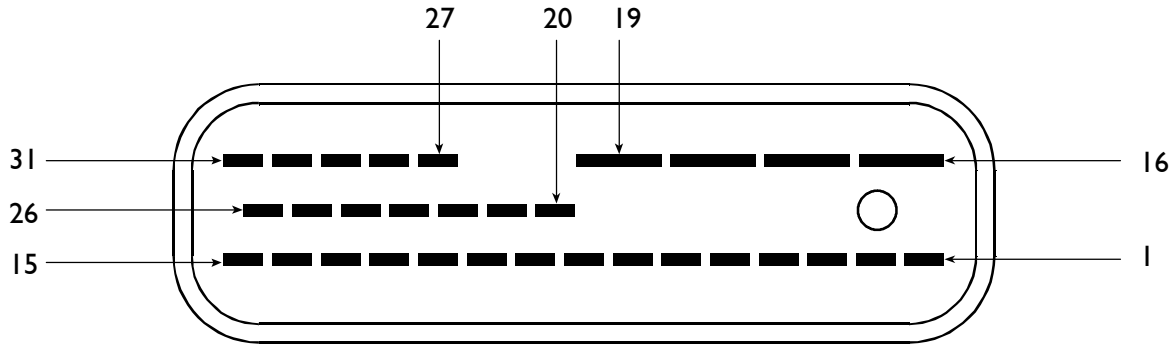

Pin	Function	Cable colour code
1	Right rear sensor	—
2	Right rear sensor	—
3	Right front sensor (only for 35 C - 40 C - 45 C - 50 C vehicles)	—
4	Right front sensor	—
5	Right front sensor (only for 29 L - 35 S vehicles)	—
6	Left front sensor	—
7	Left front sensor	—
8	Left rear sensor	—
9	Left rear sensor	—
10	—	—
11	Line K to pin 4 38-pin connector for diagnostics	8817
12	Line L to pin 3 38-pin connector for diagnostics	8818
13	Negative for third brake relay	0315
14	Positive from stop light switch	1173
15	Key-operated positive	8847
16	Earth	0000
17	Direct positive	7772
18	Direct positive	7772
19	Earth	0000
20	Negative for ABS failure warning light	6670
21	Negative for EBD failure warning light	6673
22	—	—
23	—	—
24	Negative for ABD operating warning light	6674
25	—	—
26	—	—
27	—	—
28	—	—
29	—	—
30	—	—
31	—	—

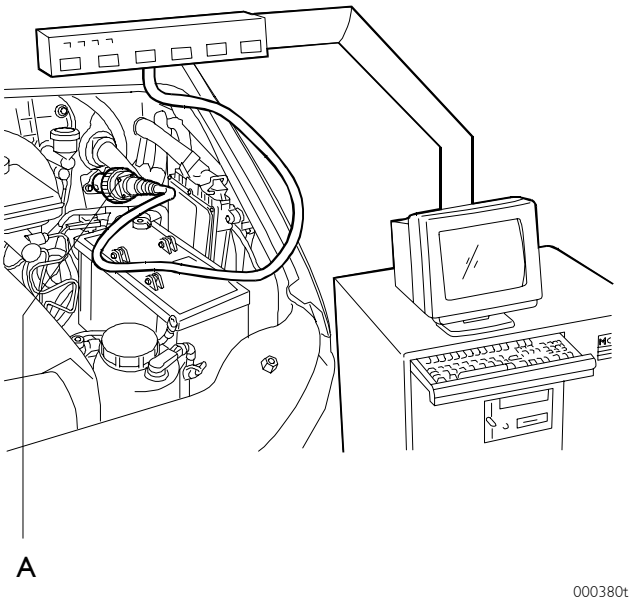

IV.30 DIAGNOSTICS THROUGH MODUS

Diagnostics through Modus

Use adapter no. 99331043 (A).

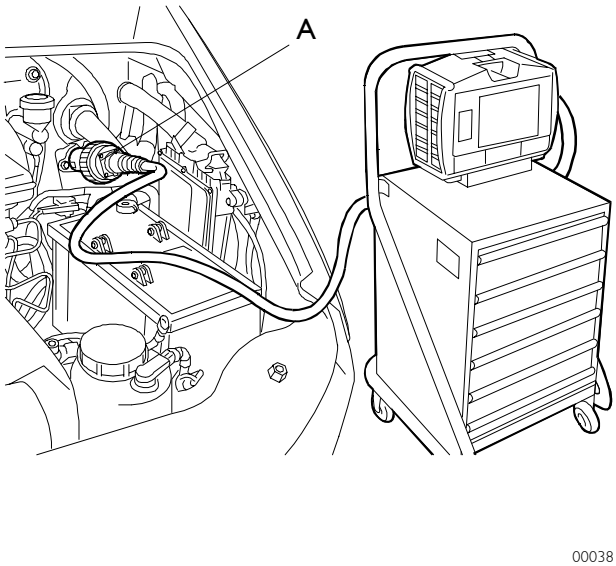

IV.31 DIAGNOSTICS THROUGH IWT

Diagnostics through IWT

Use adapter no. 99331043 (A).

EGR (8140.63)

E.G.R. Exhaust gas re-circulation system

General

This system re-circulates part (max. 30%) of the combustion gas from the

engine exhaust manifold to the intake manifold according to appropriate parameters permanently recorded in the system electronic control unit.

Re-circulation of the gas to the intake is allowed only at low loads where the air/fuel ratio is decidedly high.

Exhaust gas re-circulation is applied only to enable the engine/vehicle to meet the nitrice oxide (NO_x) gas emission limits.

Exhaust gas re-circulation makes it possible to reduce the amount of nitric oxide released by the engine by about 40% while the increases of hydrocarbons and particulates are almost negligible.

This is due to a slowing down effect of the combustion reaction due to the presence of inert gas instead of oxygen, thus lowering the maximum temperature of the gas cycle on which the formation of nitric oxides closely depends.

In addition to the different course of combustion, there is the further effect of the reduction of the flow rate of the gas at the vehicle exhaust from which the re-circulated gas is subtracted.

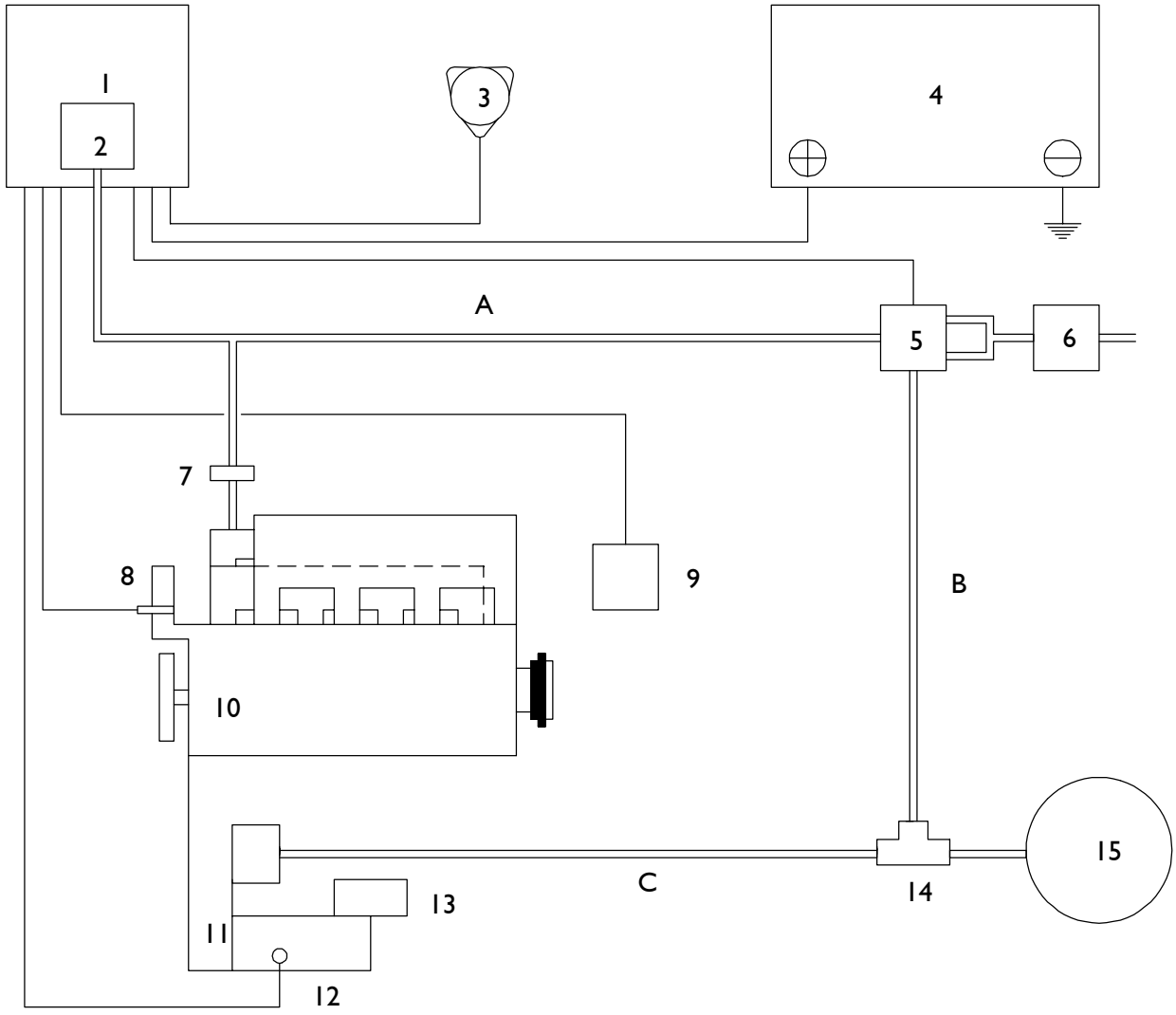

IV.32 **1.** ELECTRONIC CONTROL UNIT - **2.** VACUUM SENSOR - **3.** ABSOLUTE PRESSURE SENSOR - **4.** BATTERY - **5.** MODULATING SOLENOID VALVE - **6.** AIR CLEANER - **7.** EGR AIR VALVE - **8.** COOLANT FLUID TEMPERATURE SENSOR - **9.** ENGINE RPM SENSOR - **10.** ENGINE - **11.** VACUUM PUMP - **12.** POTENTIOMETER ON INJECTION PUMP LEVER - **13.** KSB - **14.** UNION WITH CALIBRATED SECTION - **15.** SERVOBRAKE - **A.** ACTUATING VACUUM DUCT - **B.** VACUUM TAKEOFF DUCT - **C.** SERVOBRAKE VACUUM DUCT

Operating principle

The electronic control unit (1), (EGR for mechanical pump supply system engines and EDC for Unijet engines), drives the modulating solenoid valve (2) according to suitable procedures programmed in its memory.

The solenoid valve (2) puts the EGR valve (3) into communication with the vacuum in the circuit of the vacuum pump (4) - servobrake (5).

This vacuum, modulated by the solenoid valve (2) according to the commands issued by the control unit (1) acts on the EGR valve (3), the opening of which puts the exhaust manifold into communication with the intake manifold.

When the engine is running under conditions that do not require exhaust gas re-circulation (engine cold, idle speed, full load), the modulating solenoid valve (2) closes the connection with the vacuum circuit and puts the section of pipe upstream of the EGR valve (3), into communication with the atmosphere. The EGR valve closes, separating the two manifolds again.

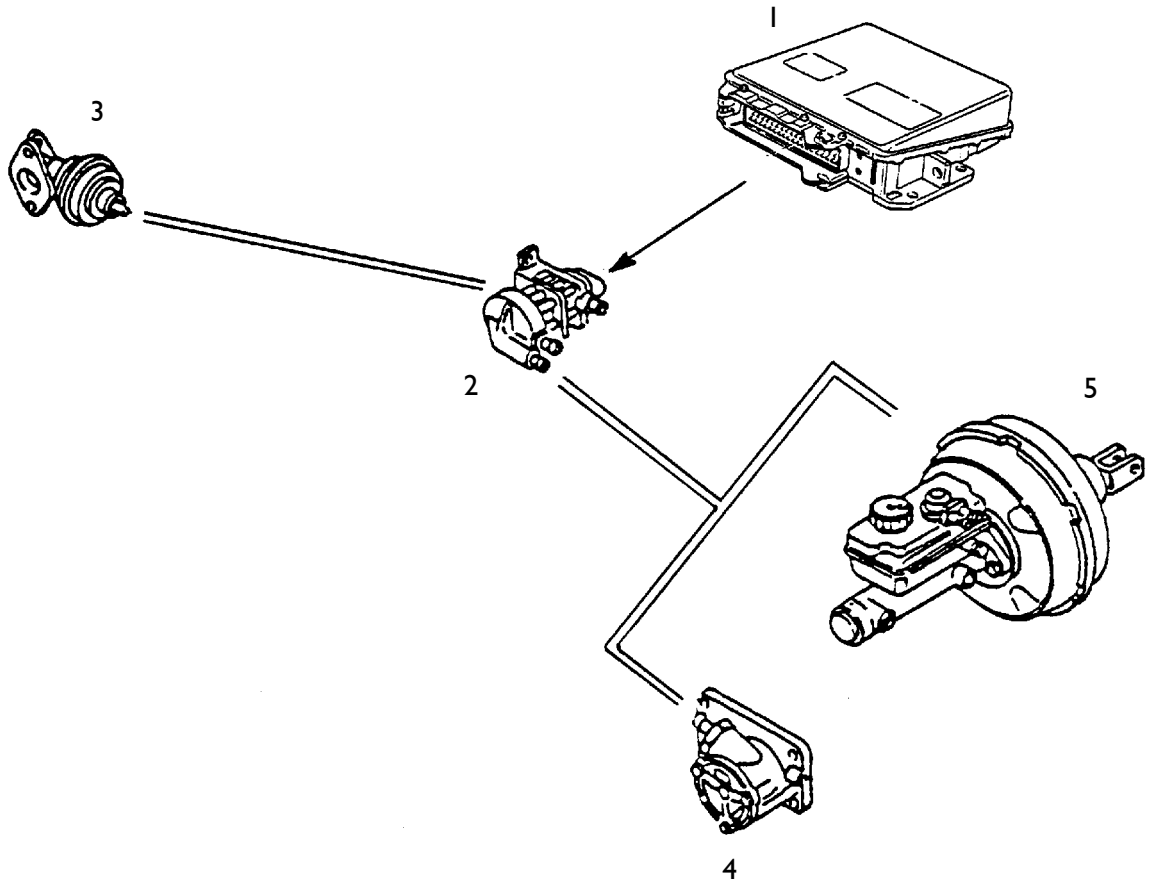

IV.33 E.G.R. SYSTEM COMPONENTS
1.ELECTRONIC CONTROL UNIT - **2.** MODULATING SOLENOID VALVE - **3.** EGR VALVE - **4.** SERVOBRAKE VACUUM PUMP - **5.** SERVOBRAKE

EGR system for Combi vehicle 8140.43B ÷ 8140.43S engines

The EGR system on 8140.43B and 8140.43S engine is similar to the one on the 8140.63 engine.

It differs from the present version on 8140.63 engine for management by EDC center MS6.3 and different EGR compresses air and modulating electro valve settings.

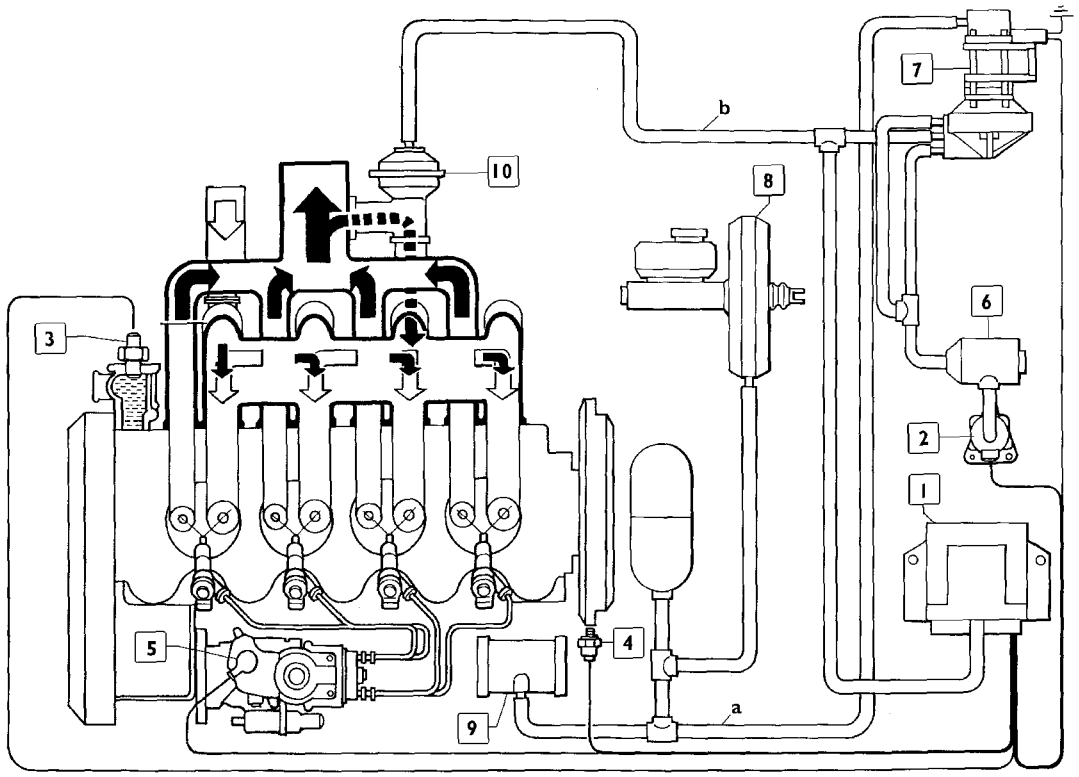

IV.34 EGR SYSTEM FOR THE 8140.63 ENGINE.
A. SERVO BRAKE DEPRESSION CIRCUIT - B. EGR MODULATED DEPRESSION CIRCUIT
1. BITRON ELECTRONIC CENTER - 2. ATMOSPHERIC PRESSURE SENSOR - 3. WATER TEMPERATURE SENSOR - 4. ENGINE RPM SENSOR - **5.** POTENTIOMETER ON INJECTION PUMP COMTROL LEVER - **6.** AIR FILTER - **7.** MODULATING ELECTRO VALVE - **8.** SERVO BRAKE - **9.** DEPRESSION - **10.** EGR COMPRESSED AIR VALVE

EGR system for F1A engines

The EGR system on F1A engines is similar to that on 8140.63, 8140.43B and 8140.43S engines.

It differs from the version on 8140.63B engines 8140.63S in exhaust gas heat exchanger application.

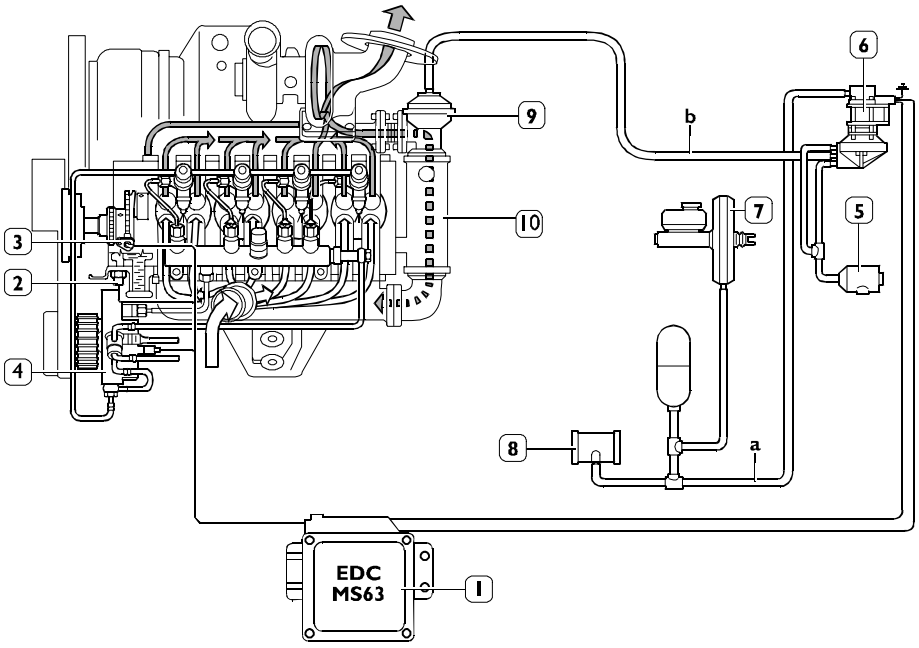

003339t

IV.35 EGR SYSTEM FOR F1A ENGINE

A. SERVO BRAKE DEPRESSION CIRCUIT - **B.** EGR MODULATED DEPRESSION CIRCUIT
1. ELECTRONIC CENTRE - **2.** WATER TEMPERATURE SENSOR - **3.** ENGINE RPM SENSOR - **4.** HIGH PRESSURE PUMP - **5.** AIR FILTER - **6.** MODULATING ELCTRO VALVE - **7.** DEPRESSION SERVOBRAKE - **8.** DEPRESSOR - **9.** EGR COMPRESSED AIR VALVE - **10.** EXHAUST GAS HEAT EXCHANGER

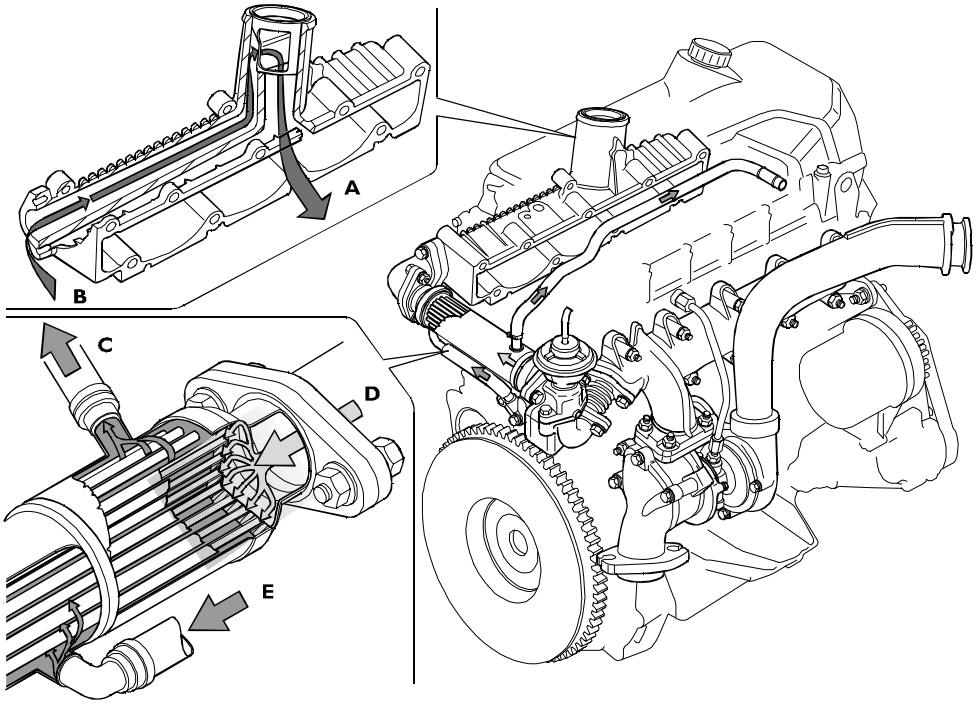

75537

IV.36 EXHAUST GAS HEAT EXCHANGER

A. ASPORATION EXHAUST GAS - **B.** COOLING EXHAUST GAS - **C.** COOLAND TO HEATER - **D.** GAS FROM EGR VALVE - **E.** COOLANT FROM CYLINDER HEAD

SYSTEM COMPONENTS

E.G.R. air valve

Adjustment of the amount of re-circulated gas takes place through a mushroom valve controlled pneumatically in the vacuum withdrawn, through a union with calibrated section, from the pipe that connects the vacuum pump to the servobrake.

The control vacuum modulated by the solenoid valve will reach the duct (1) and overcoming the force of the spring it will raise diaphragm (2) connected to the shutter (3) which will move upwards and allow re-circulation of combustion gas towards intake manifold.

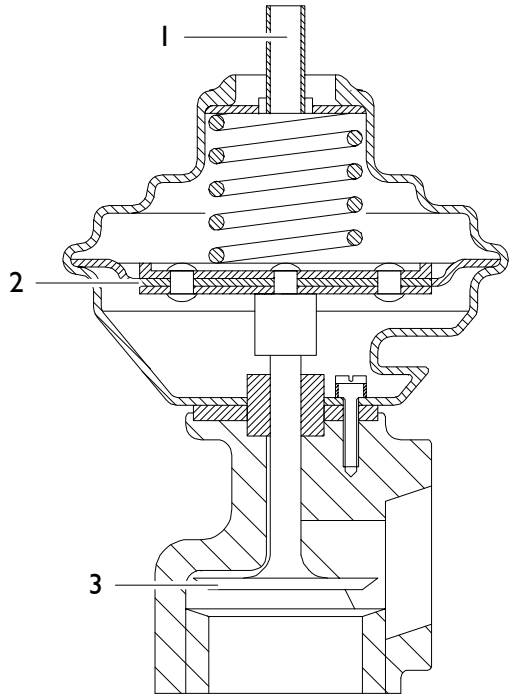

IV.37 AIR VALVE
1.DUCT - **2.** DIAPHRAGM - **3.** SHUTTER

Modulating solenoid valve

This is a proportional solenoid valve connected on one side to servobrake vacuum circuit (typical ratings 600 mm Hg) and on other it makes it possible to modulate a vacuum variable between 30 and 3.000 mm Hg depending on the command signal generated by electronic control unit.

Connected to EGR centre on pin 19 and to EDC centre on pin A25for Unijet engines.

It is supplied with a 0 ÷ 12 V signal at a fixed frequency of 140 Hz (duty-cycle). Duty cycle means the ratio between the time the signal is "ON" and the total period of the cycle (1/140 Hz). The vacuum modulated by the solenoid valve depends only on the duty cycle.

Supplying the solenoid (1), the core (2) attracts the mobile plate (3) towards it which obstructs the passage of atmospheric pressure (A) to the chamber (B).

Vacuum is created in chamber (B) the mobile, equipment (4) rises allowing connection between the vacuum source (F) and the outgoing vacuum (E).

When the solenoid valve is not supplied, there will only be atmospheric pressure at the outlet as the mobile pressure (3) falls, atmospheric pressure reaches chamber (B), mobile equipment (4) moves down, valve (5) blocks the inlet of the vacuum source (F) and atmospheric pressure (C) and control pressure (B) communicate with the outlet vacuum (E) through hole (D).

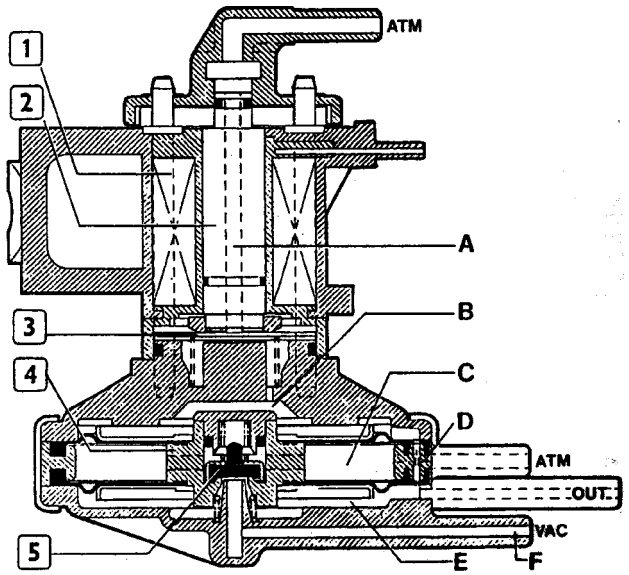

IV.38 MODULATING SOLENOID VALVE

Engine coolant temperature sensor

This an NTC sensor located in a boss of the thermostat body.

It detects the temperature of the water in the head and makes it possible to reduce E.G.R. below a temperature of 40 °C until shutting it off completely because when the engine is cold it would cause high smoke and difficulty in starting.

Connected to EGR centre on pins 2 - 11 and to EDC centre on pins 1 – 3 for Unijet engines.

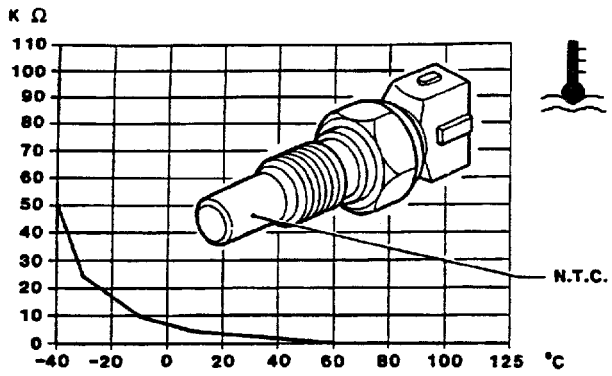

IV.39 ENGINE COOLANT FLUID TEMPERATURE SENSOR

Engine rpm sensor

This is an inductive sensor located on the engine flywheel.

It generates signals obtained by the magnetic flux lines which close through the four holes machined on the flywheel.

The electronic control unit uses this signal to detect the different engine speeds.

This signal is also sent to the instrument cluster on pin B2 to drive the electronic rev counter.

Connected to EGR centre on pins 8 – 17 and to EDC centre on pins 29 – 37 for Unijet engines.

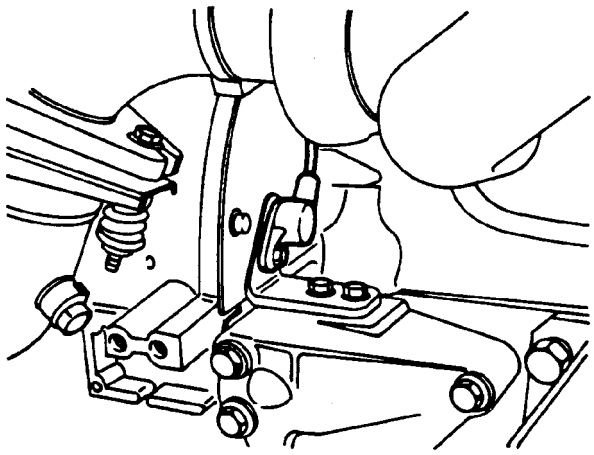

IV.40 ENGINE RPM SENSOR

Vacuum sensor

Connected inside the centre (mechanical pump for EGR engines - EDC for Unijet engines), it corrects any component error/maladjustment to ensure proper depression as required by the system.

It also makes it possible to detect any malfunctioning of the E.G.R. system due to blowby or pneumatic failure of the modulating solenoid valve.

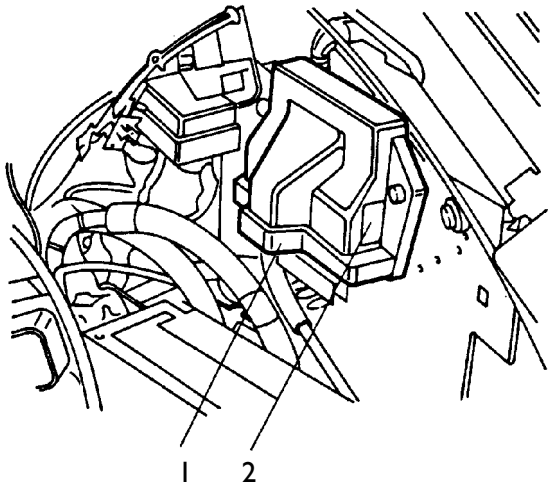

IV.41 DEPRESSION SENSOR
1. SENSOR – 2. EGR ELECTRONIC CENTRE

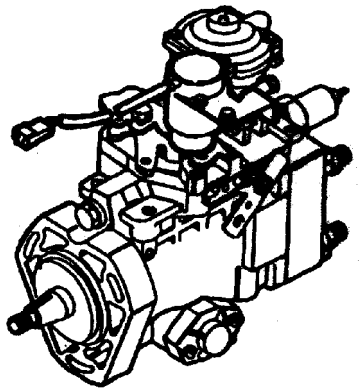

IV.42 POTENTIOMETER ON INJECTION PUMP LEVER

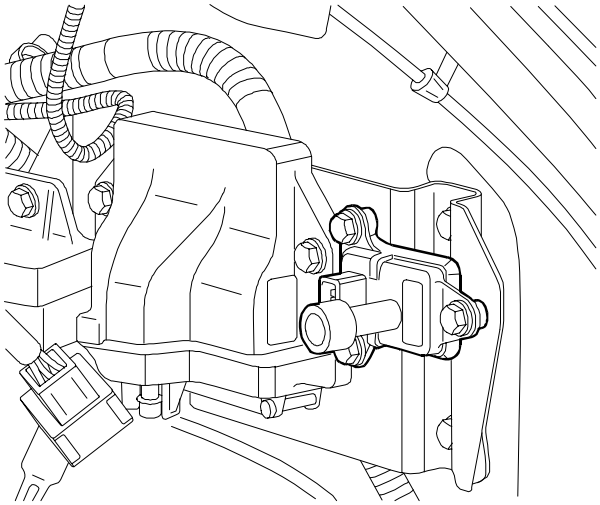

8661

IV.43 ABSOLUTE PRESSURE SENSOR

Components only on the EGR system (8140.63)

Potentiometer on injection pump lever

This is located on the injection pump lever. Being unable to exactly measure the load acting instantaneously on the engine, the control unit measures the position of the injection pump lever which is a sign of the inlet of fuel, thus of the consequent load.

It is supplied with a voltage of 5 V.

It is connected to the control unit on pins 3 - 9 - 11.

Absolute pressure sensor

It is positioned in the right-hand side of the engine compartment and detects the environment pressure rating. It makes it possible to reduce E.G.R. above 1.500 mt. of altitude, as the lowering of the oxygen due to the lower air density enhances smoke with the E.G.R. on.

It is supplied at 5 V.

It is connected to the control unit on pins 9 - 10 - 11.

It supplies the control unit a signal of between 0 ÷ 5V depending on the environment pressure.

It supplies the control unit a signal between 0 ÷ 5 V depending on the angle of rotation of the injection pump lever.

EGR Electronic control unit

This is located in the right-hand side of the engine compartment and it is connected to the wiring by a 25-pin connector,

It incorporates the vacuum sensor.

In addition to the E.G.R. it is capable of controlling the before-after heating function, the engine cooling fan electromagnetic joint, the KSB device and, where applicable, it is connected to the climate control unit.

E.G.R. operating logic.

Depending on the position of the injection pump lever, engine rpm, coolant fluid temperature and environment pressure, the control unit decided the re-circulation percentage to be activated and drives the modulating solenoid valve.

Through the vacuum sensor it reads the "actual" vacuum modulated by the modulating solenoid valve, compares it with the theoretical one, and if the two values differ within determinate parameters, it makes the necessary corrections to control the modulating solenoid valve until reaching the required "actual" vacuum rating, otherwise, it does not take account of it and controls the solenoid valve without the reference signal.

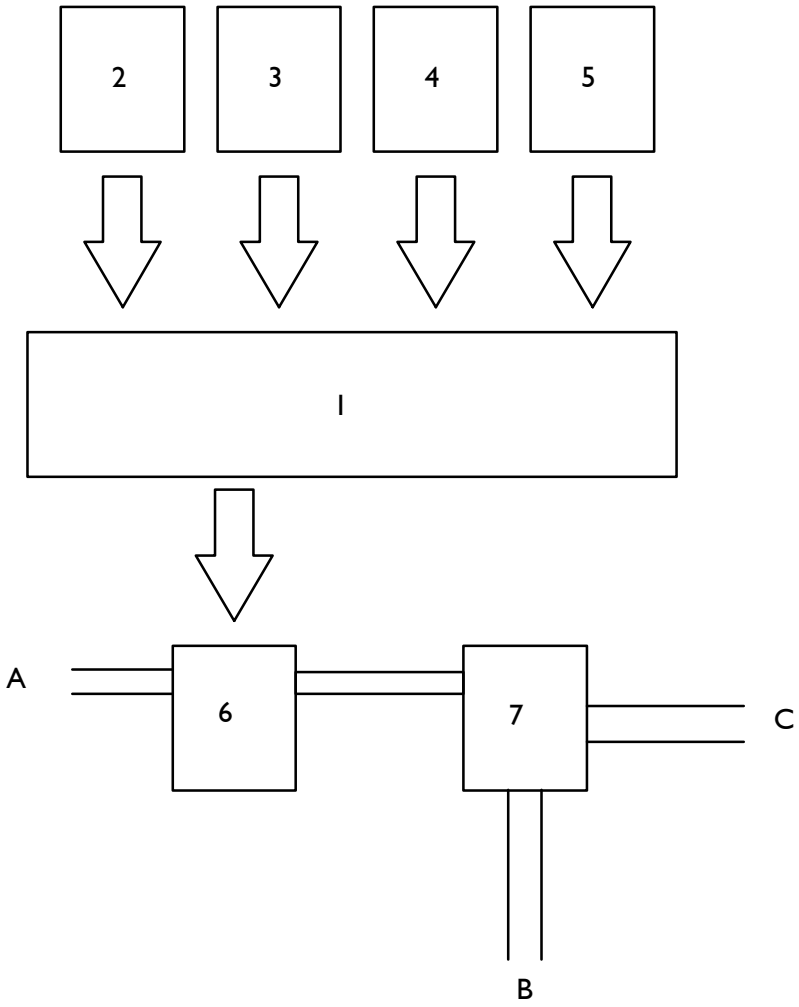

IV.44 **1.** EGR ELECTRONIC CONTROL UNIT - **2.** INJECTION PUMP LEVER POTENTIOMETER - **3.** ENGINE RPM SENSOR - **4.** COOLANT FLUID TEMPERATURE SENSOR - **5.** ABSOLUTE PRESSURE SENSOR - **6.** MODULATING SOLENOID VALVE - **A.** SERVOBRAKE VACUUM SENSOR - **B.** FROM EXHAUST MANIFOLD - **C.** TO INTAKE MANIFOLD

Air-conditioner Interface Operating Logic

The EGR control unit turns on/off the remote control switch which activates the air conditioning system compressor (load) and, therefore, activates/de-activates the compressor itself, upon start-up, depending on the engine cooling fluid temperature and the number of revolutions of the internal-combustion engine, during acceleration.

NOTE When the load is on, the compressor is disconnected.
When the load is off, the compressor is connected.

Start-up: upon start-up the EGR electronic control unit activates the remote control switch (NC) to start the compressor. This load will be disconnected 6 + 1 seconds after the 700 ± 25 rpm value of the I.C. engine is exceeded, allowing, if required, the compressor to start. Although the rpm value of the engine falls below the threshold values, the load will not be connected again until the engine is restarted.

Engine cooling fluid temperature: the load is connected at ~107°C and disconnected at ~101°C. The resistance values for the engine cooling fluid temperature sensor for EGR are equal to ~160Ω at 107°C and ~195Ω at 101°C.

Number of revolutions of the engine: the load is disconnected at .4000 rpm and is connected at 34100 rpm.

Pre-Post Heating Operating Logic

The control unit monitors pre-post heating as a function of the engine compartment temperature measured by a sensor located inside the control unit itself.

It activates the remote control switch controlling the plugs (this switch is positioned on the right side of the engine compartment) for a variable time as a function of the above temperature.

Engine Cooling Fan Operating Logic

The control unit can connect/disconnect the electromagnetic coupling of the fan depending on the cooling fluid temperature.

It connects it when ~94°C are reached and disconnects it at ~76°C. (The temperature sensor resistance at these values is equal to ~245Ω at 94°C and ~420Ω at 76°C).

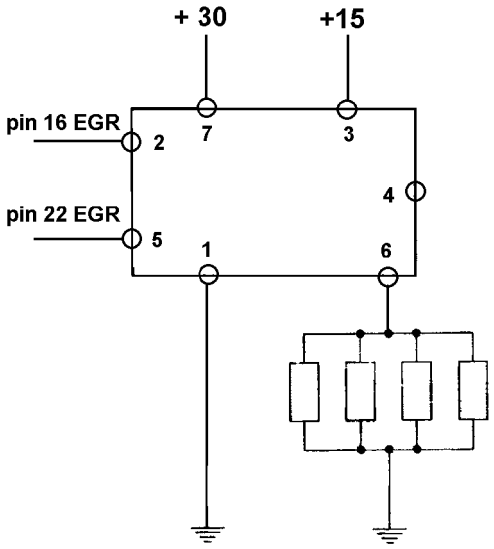

IV.45 CONNECTIONS OF GLOW PLUG CONTROL RELAY

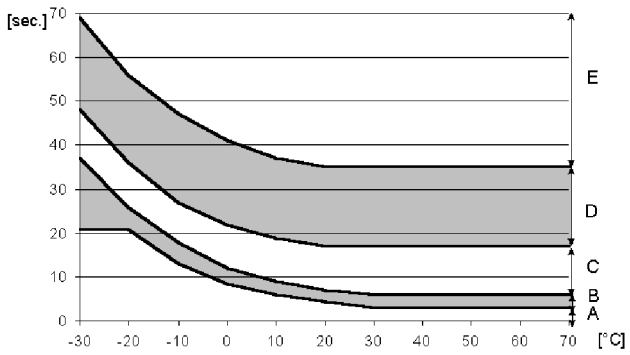

IV.46 BEFORE-AFTER WARMING DEVICE OPERATING GRAPH **A.**WARMING ON AND WARNING LIGHT ON **- B.** WARMING TIME ON WITH WARNING LIGHT ON **- C.** DISTRACTION TIME **- D.** AFTER WARMING TIME **- E.** AFTER WARMING OFF AND WARNING LIGHT OFF

KSB Operating Logic

At approximately 1000 m, the EGR electronic control unit turns on, by activating the relevant remote control switch, the KSB advance variator when the engine cooling fluid temperature is equal to ~25°C and turns it off at ~20°C.

The relevant resistance values of the engine cooling fluid temperature sensor are: 3KΩ + 100Ω at 25°C and 3.8KΩ + 100Ω at 20°C.

Instead, at an altitude of approximately 1100 m, the variator is activated at ~55°C and disconnected at ~50°C. In this case the resistance values of the sensor are, respectively, 900 +20Ω and 1.08KΩ + 20Ω.

Control unit pin out

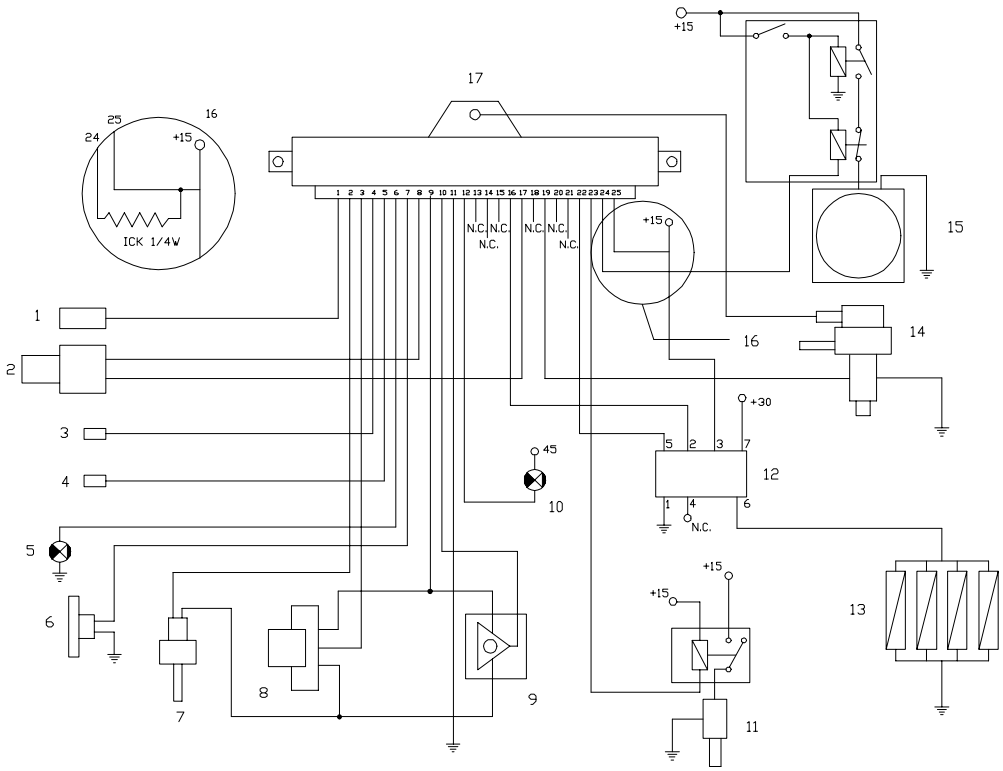

IV.47 **1.** LINE K FOR DIAGNOSTICS - **2.** ENGINE RPM SENSOR - **3.** ENGINE RPM SIGNAL REPETITION - **4.** INJECTION PUMP POTENTIOMETER SIGNAL REPETITION - **5.** BEFORE-AFTER WARMING WARNING LIGHT - **6.** FAN CONTROL ELECTROMAGNETIC CLUTCH - **7.** ENGINE COOLANT FLUID TEMPERATURE SENSOR - **8.** INJECTION PUMP POTENTIOMETER - **9.** ABSOLUTE PRESSURE SENSOR - **10.** EGR SYSTEM FAILURE WARNING LIGHT - **11.** KBS ACTUATOR - **12.** GLOW PLUG CONTROL RELAY - **13.** GLOW PLUGS - **14.** EGR MODULATING SOLENOID VALVE - **15.** COMPRESSOR ELECTROMAGNETIC CLUTCH - **16.** VARIANT FOR VEHICLES WITHOUT CLIMATE CONTROL - **17.** EGR ELECTRONIC CONTROL UNIT

Pin ECU	Function
1	Line K for 38-pin diagnostic connector (pin 2)
2	Signal from engine coolant fluid temperature sensor
3	Signal from potentiometer on injection pump lever
4	Rpm signal repetition for instrument cluster
5	Potentiometer signal on injection pump repetition
6	Supply for before-after warming on warning light
7	Supply for fan control electromagnetic joint
8	Engine rpm sensor (.11)
9	5 Volt supply for potentiometer and absolute pressure sensor
10	Signal from absolute pressure sensor
11	Shared negative for sensors and potentiometer
12	Negative for EGR failure warning light
13	—
14	—
15	—
16	Signal for switching on before-after warming control
17	Engine rpm sensor (.11)
18	—
19	Supply for EGR modulating solenoid valve
20	—
21	—
22	Return signal from before-after warming control relay
23	Control negative for KSB actuator
24	Control negative for disengaging climate control compressor

Oxidising catalyst

This is a one-piece ceramic honeycomb the cells of which are impregnated with platinum, a substance that catalyses oxidising reactions.

The chemical reaction is effective with temperatures above 200 °C.

In the catalyst NO_x - CO - HC, are oxidised and converted into nitrogen N2 - carbon dioxide CO_2 - water vapour H_2O.

The reduction of the nitric oxides is negligible, that is why it was decided to intervene on the engine parameters in order to reduce the formation of them at the very origin.

The catalyst also treats the hydrocarbons forming the particulate, but it cannot neutralise the carbon core.

The reduction efficiency of the single pollutants is subdivided as follows:

- 50% of CO
- 50% of HC
- 35% of particulate

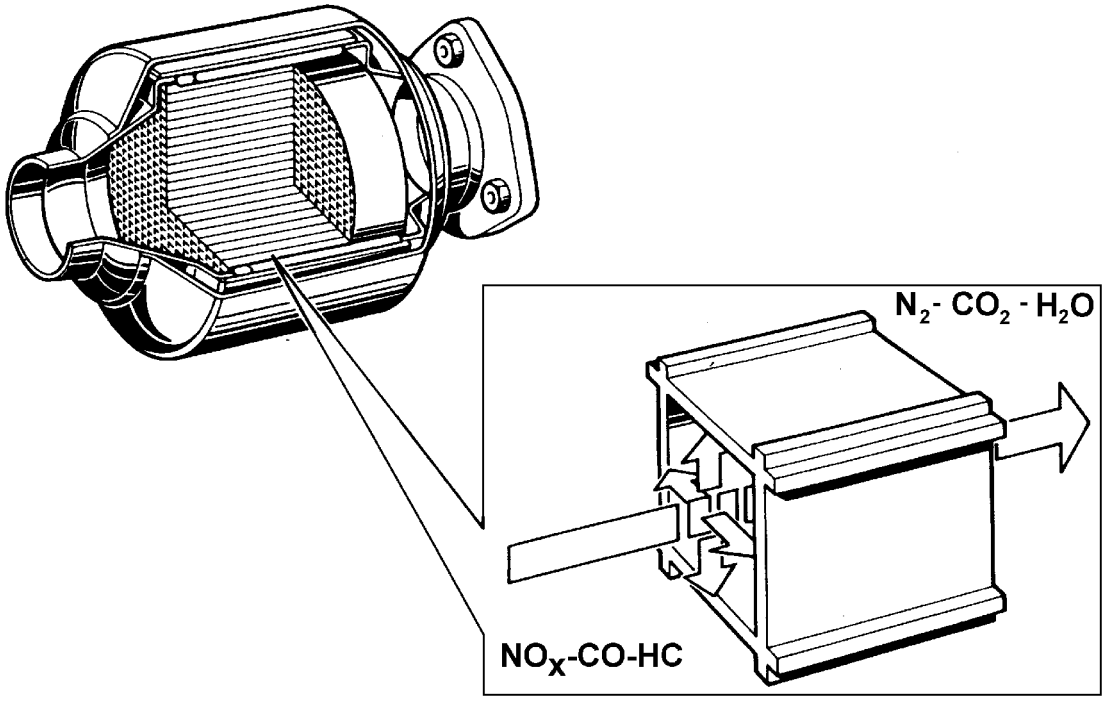

IV.48 OXIDISING CATALYST

COMMON RAIL (8140.43S)

General

In order to reduce the emission of particulate, particularly high injection pressures are required.

The system on the new Daily makes it possible to inject the fuel at pressures reaching 1350 bar, while the pressure obtained with electronic system management optimises the work of the engine limiting emissions and consumption.

In other diesel systems the high pressure is generated only at the moment of injection for each single cylinder (injection pump or injector-pump).

In the common rail a special pump continuously keeps the fuel at high pressure, regardless of the stroke and of the cylinder that is to receive injection, and accumulates it in a common duct for all the injectors.

Therefore, fuel already at the injection pressure is always present at the inlet of the injectors.

When the solenoid valve of an injector is energised by the electronic control unit, injection takes place in the corresponding cylinder.

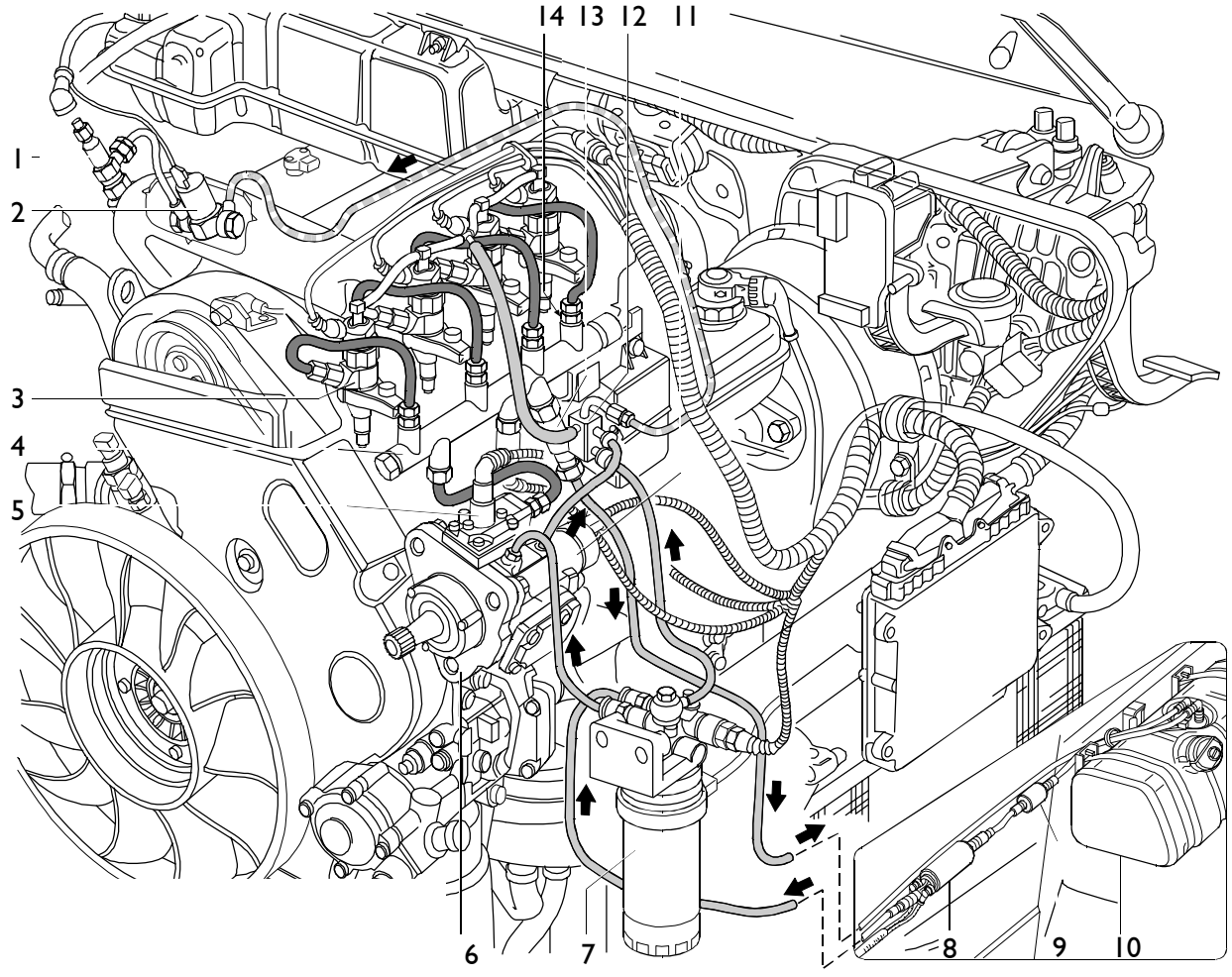

IV.49 FUEL FEED AND RECIRCULATION DIAGRAM
1. HEAT STARTER PLUG - **2.** HEAT STARTER ELECTRO VALVE - **3.** ELECTRICAL INJECTOR - **4.** RAIL HYDRAULIC ACCUMULATOR - **5.** 3RD PUMP CUTOUT ELECTRO VALVE - **6.** HIGH-PRESSURE PUMP - **7.** FUEL FILTER - **8.** ELECTRICALLY DRIVER PUMP - **9.** PREFILTER - **10.** RESERVOIR - **11.** PRESSURE REGULATOR VALVE - **12.** CONNECTION - **13.** PRESSURE LIMITER VALVE - **14.** FLOW LIMITER.

In reality the system is much more complex, as the various control and adjustment components have to be integrated.

The MS6.3 electronic control centre monitors the entire system: it receives data from sensors and activates the actuators as required based on input signal processing.

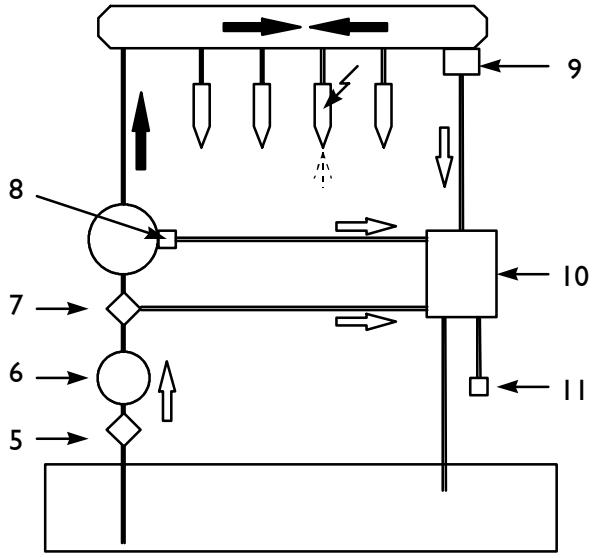

IV.50 HYDRAULIC LAYOUT
5. PRE-FILTER - **6.** ELECTRIC PUMP - **7.** FILTER WITH OVERPRESSURE VALVE - **8.** PRESSURE REGULATOR - **9.** PRESSURE LIMITER - **10.** FUEL OUTLETS UNIT - **11.** THERMAL STARTER

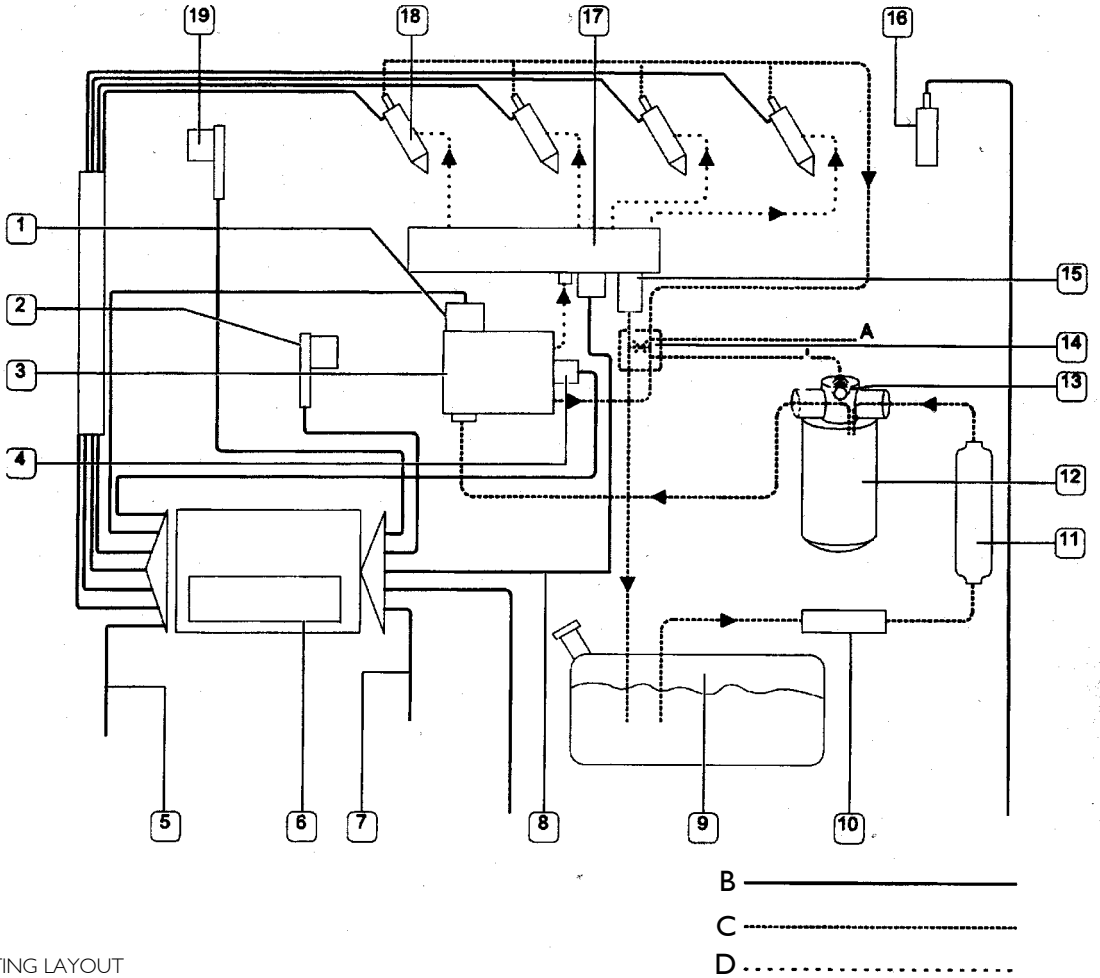

IV.51 OPERATING LAYOUT
1. 3RD IMPELLER CUT-OFF DEVICE - **2.** FLYWHEEL RPM SENSOR - **3.** HIGH PRESSURE PUMP - **4.** PRESSURE REGULATOR - **5.** OTHER ACTUATORS (THERMAL STARTER, HEATED FILTER, FAN CONTROL, AC CONTROL) - **6.** ELECTRONIC CONTROL UNIT WITH BUILT-IN ATMOSPHERIC PRESSURE SENSOR - **7.** OTHER SENSORS (ACCELERATOR, BRAKE, CLUTCH, VEHICLE SPEED, WATER TEMPERATURE, AIR TEMPERATURE) - **8.** FROM RAIL PRESSURE SENSOR - **9.** FUEL TANK - **10.** PRE-FILTER - **11.** ELECTRIC PUMP - **12.** FUEL FILTER - **13.** FILTER OVERPRESSURE VALVE - **14.** OUTLETS UNIT WITH CALIBRATED HOLE - **15.** RAIL PRESSURE LIMITER - **16.** AIR FLOW METER - **17.** COMMON RAIL - **18.** INJECTORS - **19.** TIMING SENSOR ON CAMSHAFT - **A.** TO THERMAL STARTER - **B.** ELECTRIC CIRCUIT - **C.** LOW PRESSURE FUEL - **D.** HIGH PRESSURE FUEL

COMMON RAIL (F1A)

It differs from the Common rail system on previous engines in that injected fuel pressure is 1600 instead of 1350 bars.

Preheat plugs are provided for cold starts.

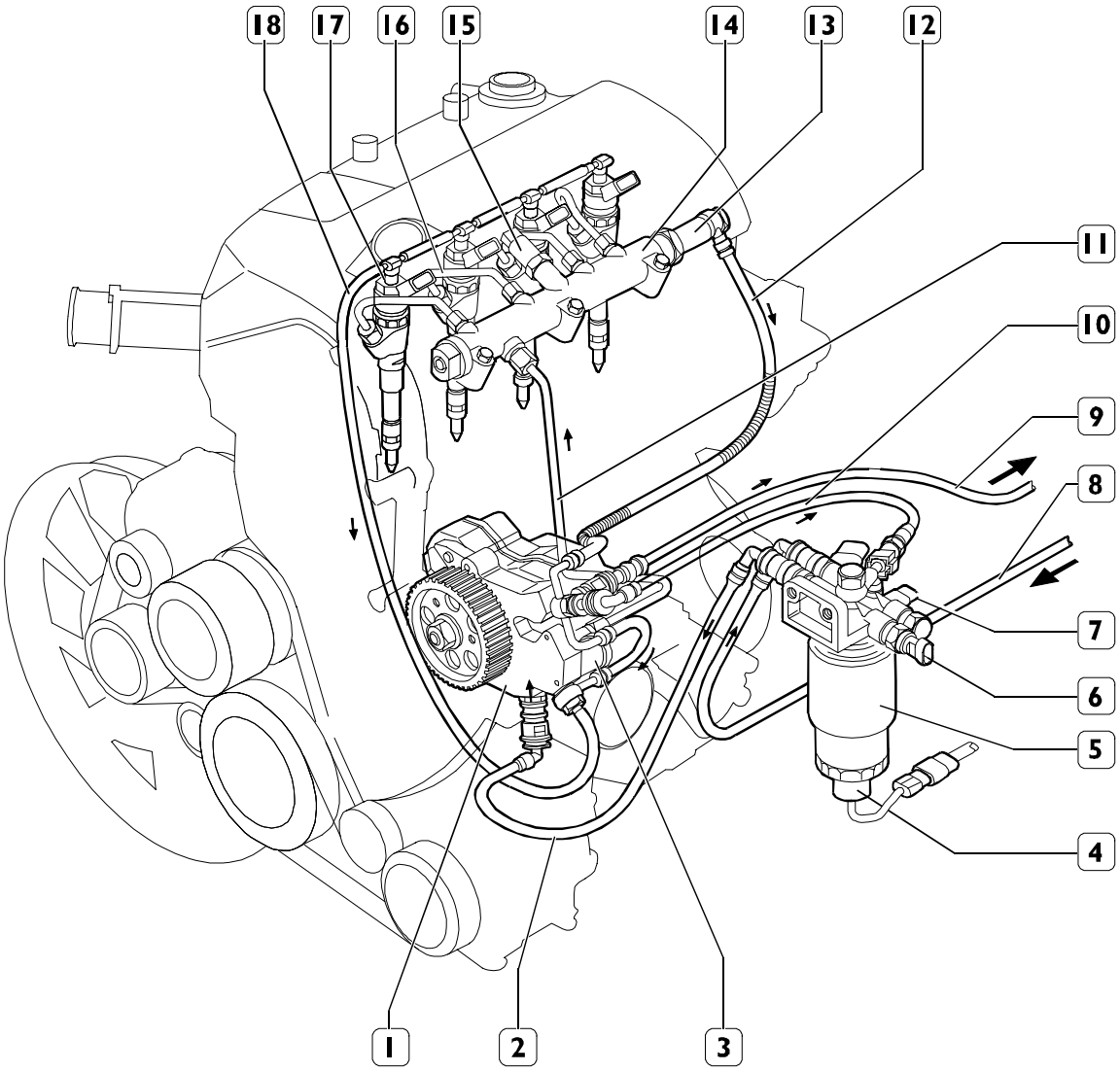

0003343t

IV.52 **1.** HIGH PRESSURE PUMP - **2.** PIPING - **3.** PRESSURE REGULATOR - **4.** WATER IN FILTER SENSOR - **5.** FUEL FILTER WITH WATER SEPARATOR - **6.** FULE FILTER CLOGGING SENSOR - **7.** FUEL SEMPERATURE SENSOR - **8.** FUEL PRESSURE LINE TO FILTER - **9.** FUEL RETURN LINE TO TANK - **10.** FUEL RETURN LINE TO FILTER - **11.** HIGH PRESSURE PIPING TO COMMON RAIL - **12.** LOW PRESSURE RETURN LINE FROM RAIL - **13.** OVER PRESSURE VALVE - **14.** COMMON RAIL - **15.** FUEL PRESSURE SENSOR - **16.** HIGH PRESSURE LINE BETWEEN0 RAIL AND ELECTRO INJECTORS - **17.** ELECTRO INJECTORS - **18.** RETURN LINE FROM ELECTRO INJECTORS

Hydraulic system (Common Rail - F1A)

The hydraulic system consists of a low and high-pressure circuit, the former consisting of the following piping:

- connecting high-pressure output to the Rail;
- Common Rail;
- connecting the Rail and supplying electro injectors.

The low-pressure circuit consists of the following piping:

- fuel aspiration from tank to prefilter;
- supplying the pump and prefilter;
- supplying the high-pressure pump via the fuel filter.

The Rail exhaust circuit and the electro injectors complete the supply circuit.

The following are mandatory for safety reasons because of high-pressure levels inside this hydraulic system:

- avoid improper connection of high pressure piping junctions;
- avoid connecting high pressure piping with the engine running (useless and hazardous attempts at purging must be avoided!)

Low-pressure circuit integrity is essential to proper system operation, so mishandling and modifications must be avoided, with immediate action required in case of leaks.

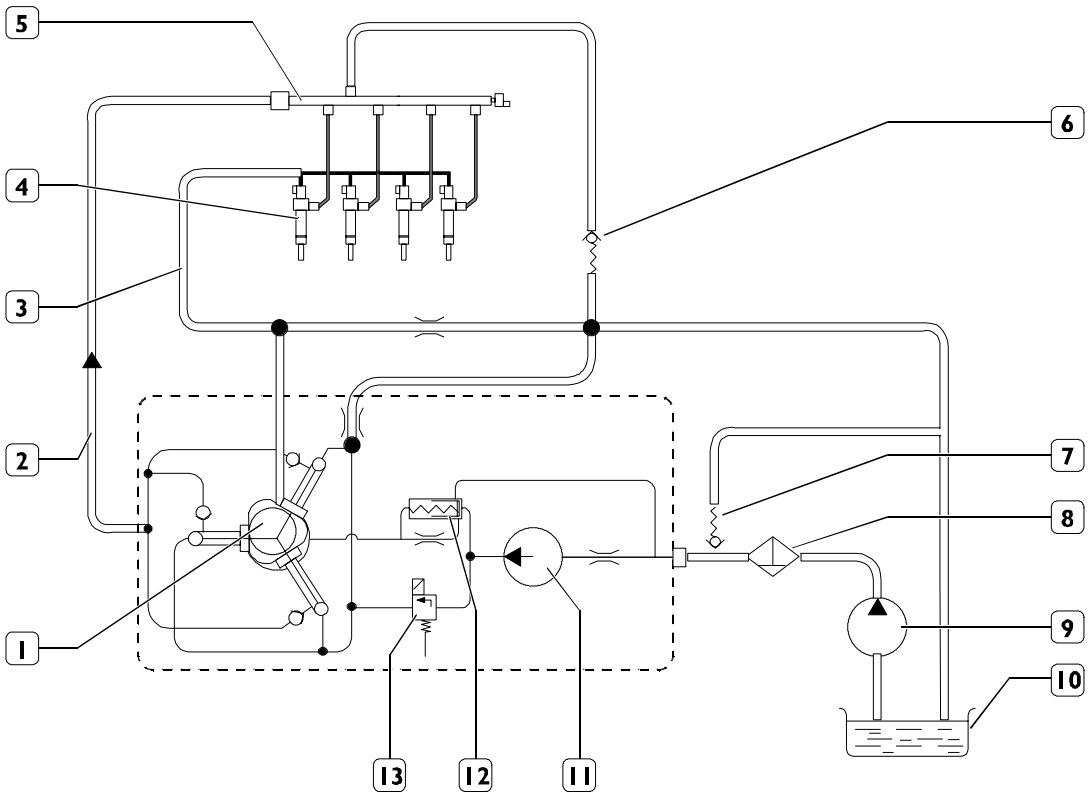

0003340t

IV.53 **1.** HIGH PRESSURE PUMP — **2 .** HIGH PRESSURE LINE — **3.** ELECTRO INJECTOR RECRICULATION LINE — **4.** ELECTRO INJECTORS — **5.** COMMON RAIL — **6.** OVER PRESSURE VALVE — **7.** BYPASS VALVE — **8.** FILTER — **9.** PRIMING PUMP — **10.** TANK — **11.** MECHANICAL SUPPLY PUMP — **12.** HGH PRESSURE PUMP LIMITER VALVE — **13.** PRESSURE0 REGULATOR

Motor 8040

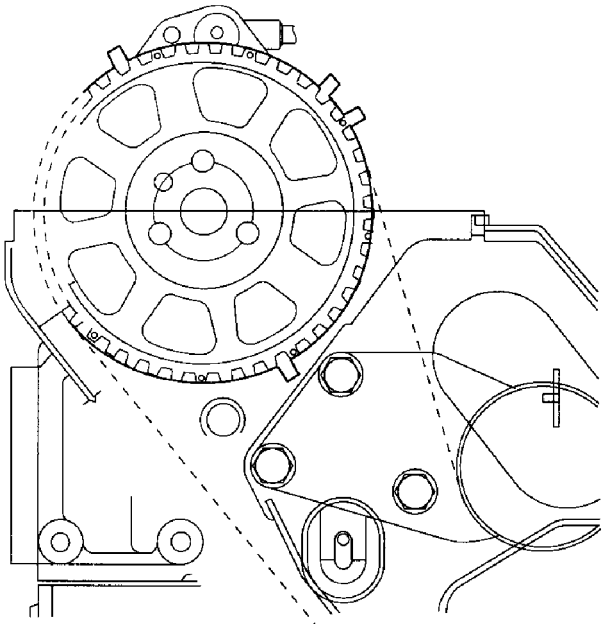

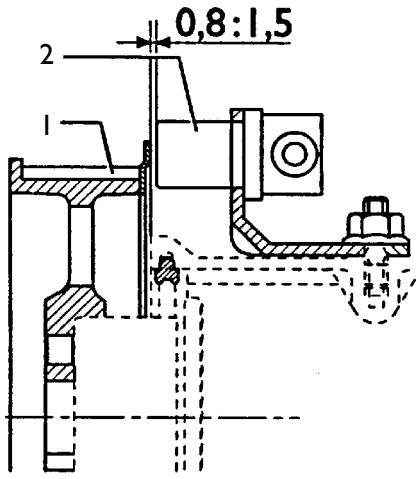

IV.54 TECHNICAL VIEWS OF PULLEY AND SENSOR
1. CAMSHAFT PULLEY **- 2.** SENSOR

SYSTEM COMPONENTS

Camshaft pulley and timing sensor

5 teeth (4 + 1 for timing detection) are machined on the pulley opposite an inductive sensor equal to the one on the flywheel.

5 holes (4 + 1 timing recognition hole) are provided on the F1A engine pulley.

The sensor is of the inductive type and is used by the electronic control unit to detect the engine stroke during synchronisation (when starting).

When assembling the sensor:

ensure the dimension illustrated working on the slots of the bracket and measuring with a thickness gauge

– make sure that the sensor is perpendicular in relation to the wheel tightening the nuts.

Motor F1A

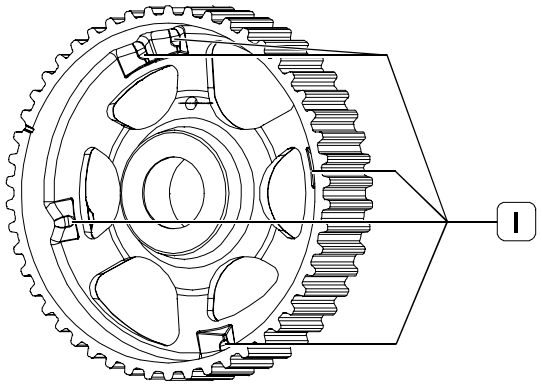

0003320t

IV.55 TIMING RECOGNITION HOLES

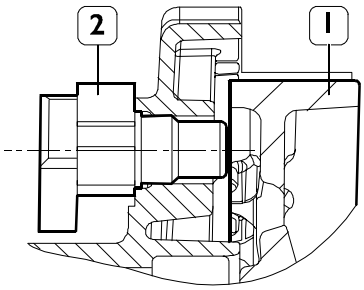

000332 1t

IV.56 **1.** CAMSHAFT PULLEY **- 2.** SENSOR

Flywheel and rpm sensor

The flywheel has a set of 58 holes (60 - 2), as illustrated, for generating the signal for the inductive sensor.

It is the same as the one on the camshaft and is positioned on the crankcase and detects the passage of the 58 holes on the flywheel.

The change in the signal caused by the lack of 2 holes (synchronism gap) which takes place at each rotation of the crankshaft is the reference signal that allows the control unit to recognise the advance in relation to the TDC of piston pair 1-4.

This signal is also used by the control unit to detect the engine rotation speed, the duration of injection and to control the rev counter.

When assembling the sensor:

– ensure the dimension illustrated working on the slots of the bracket and measuring with a thickness gauge.
– make sure that the sensor is perpendicular in relation to the wheel tightening the nuts.

The F1A engine crankshaft sensor features a slatted sound wheel on the crankshaft front.

This features 58 (60-2) teeth and the sensor detects their passage.

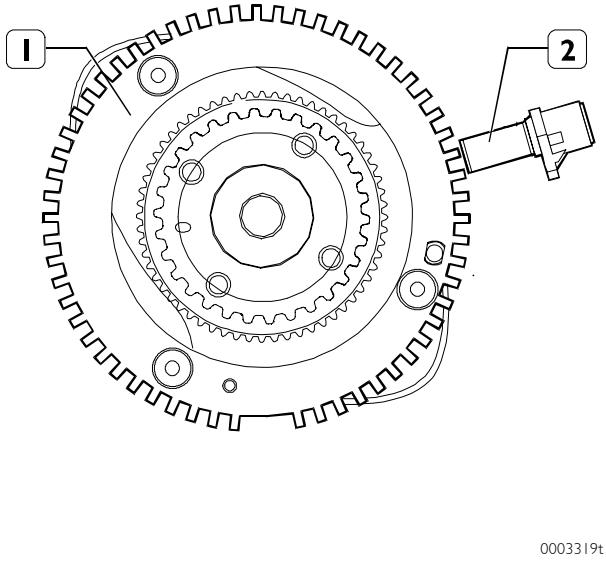

IV.60 TECHNICAL VIEW OF THE SOUND WHEEL AND SENSOR
1. SOUND WHEEL – **2.** CRANKSHAFT SENSOR

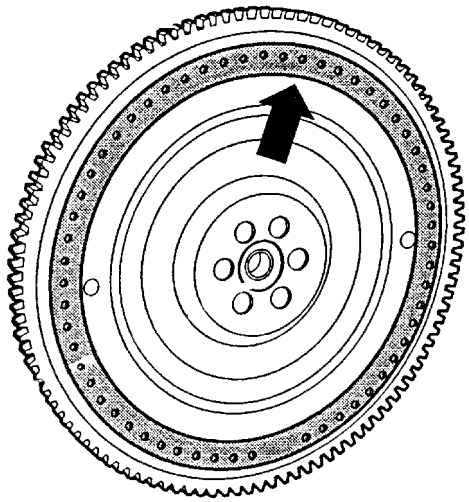

IV.57 HOLES FOR GENERATING SIGNALS ON THE FLYWHEEL

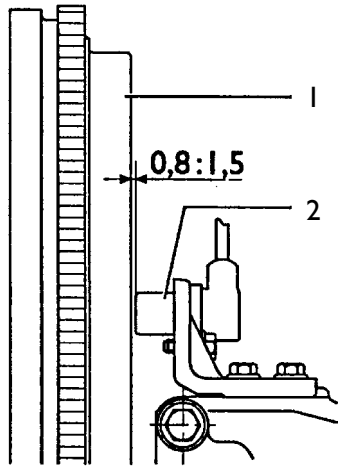

IV.58 TECHNICAL VIEW OF FLYWHEEL AND SENSOR
1.FLYWHEEL **- 2.** SENSOR

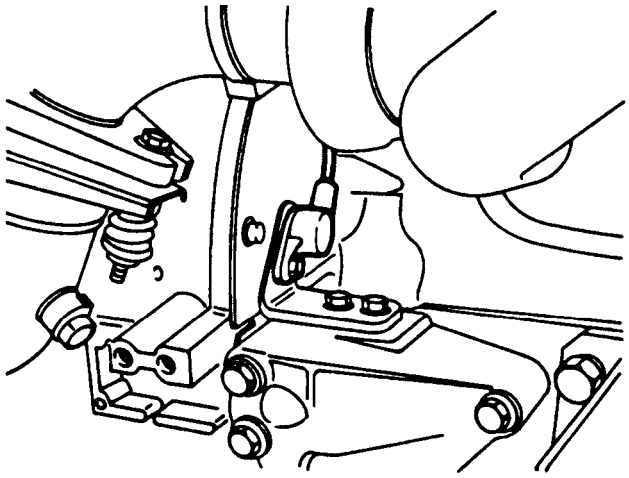

IV.59 RPM SENSOR ON CRANKCASE



IV.61 SENSOR AND CONNECTION CABLE

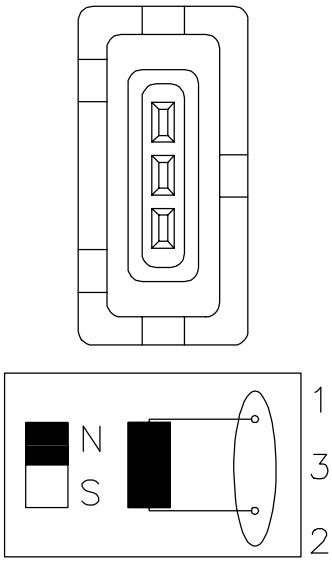

IV.62 SENSOR CONNECTOR AND WIRING DIRAGRAM

Flywheel and camshaft sensor specifications

These are inductive sensors.

The flywheel sensor (48035) is connected at pins 29 and 37 of connector A of the control unit.

It is also used to control the electronic rev counter on the instrument cluster.

The timing sensor (48042) is connected at pins 4 and 31 of connector A of the control unit.

The resistance at 20 °C is approx. ~ 860 Ohm.

Pre-filter

This is a simple transparent filter like the one in petrol supply systems.

Replace it only when a sight check reveals traces of impurity.

Electric pump

Rotary volumetric pump with integrated by pass (Fig. IV.63) located outside the fuel tank.

It is on the left-hand side of the frame in an accessible area.

There is no need to bleed the fuel supply system.

The pipes are fitted with quick couplings.

It is connected to pins 7 and 8 of connector A of the control unit.

Specifications

Delivery pressure:	2,5 bar
Flow rate:	> 155 litres/h
Supply:	13,5 V - < 5 A
Coil resistance at 20 °C:	28.5 Ohm

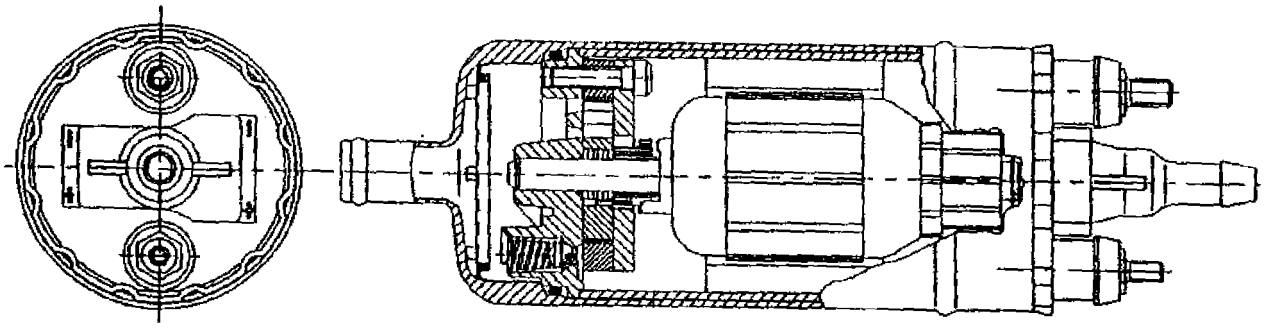

IV.63 TECHNICAL VIEW AND CROSS SECTION OF ELECTRIC FUEL PUMP

Fuel filter

Cartridge degree of filtering: 5 micron

Differential operating pressure (obstruction indicator): 0.6 bar

The fuel temperature sent by the sensor to the electronic injection control unit allows very accurate calculation of the flow rate of the fuel to be injected in the cylinders.

It is located in a fairly accessible position in the left front part of the engine compartment.

1. Actuated by ECU via relay with fuel temperature below 3°C.
2. Filtering element
3. Shows presence of water through a warning lamp on instrument panel.
4. Differential pressure sensor calibrated at 0,6 bar : any clogging is shown by warning lamp
5. It is a NTC sensor connected to EDC for fuel temperature reading enabling electronic control to calculate the amount of diesel oil to be injected into the cylinders.
6. Installed on filter support for excess fuel return to tank.

Engine 8040

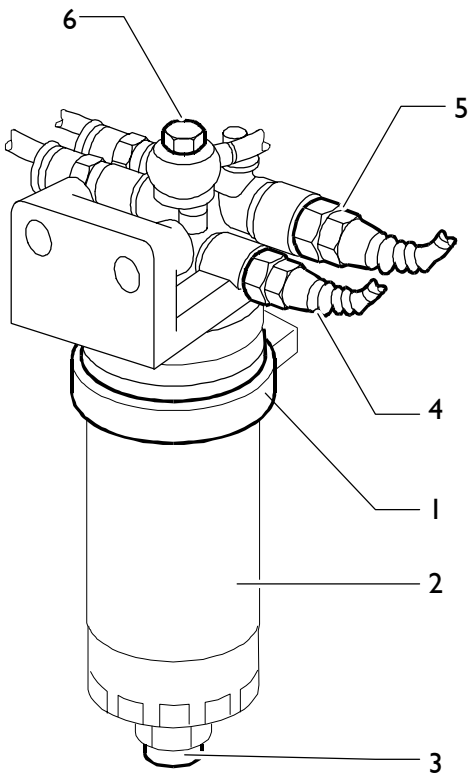

IV.64 FUEL FILTER
1.HEATER **- 2.** FILTERING ELEMENT **- 3.** CONDENSATION INDICATOR **- 4.** OBSTRUCTION INDICATOR **- 5.** FUEL TEMPERATURE SENSOR - **6.** DISCHARGE

Engine F1A

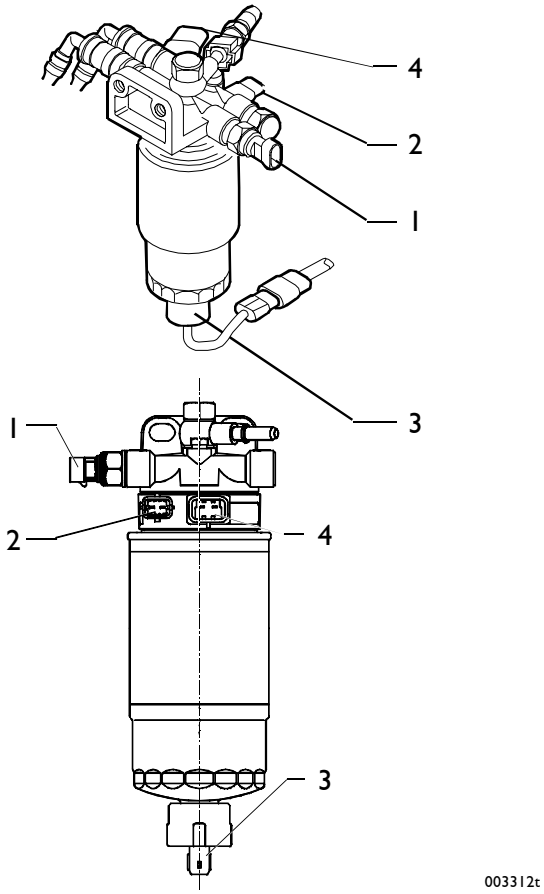

IV.65 **1.** CLOGGED FILTER SENSOR – **2.** FUEL TEMPERATURE SENSOR – **3.** WATER SENSOR – **4.** HEATER

High pressure pump

This pump has three radial pistons (total displacement 0,7 cc) controlled by the timing gear belt, with no need for calibration.

Each impeller unit comprises:

- a piston (5) operated by a cam (2) integral with the pump shaft (6)
- a plate inlet valve (3)
- a ball delivery valve (4)

The delivery pressure to the rail is modulated between 250 and 1350 bar by the electronic control unit, acting on the pressure regulator solenoid valve.

The pump is lubricated and cooled by the fuel itself.

The 3rd impeller cut-off solenoid valve (78015) serves to increase the part of fuel oil that lubricates the radialjet pump, it is used above 4200 rpm (when power is no longer needed) and keeps the intake valve open also when the cylinder is compressing. It sends one third of the capacity of the high pressure pump back to low pressure.

The on-off time is considerably lower than conventional injection pumps.

The control solenoid valve is connected to pins 20 and 21 of connector A of the control unit.

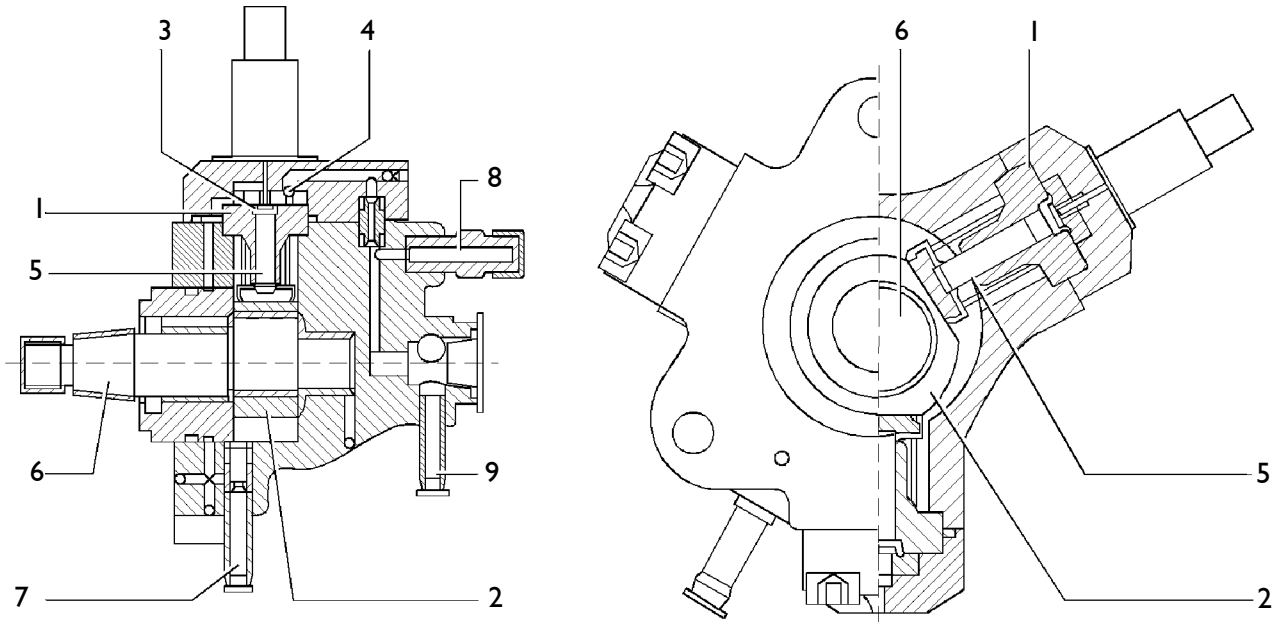

IV.66 TECHNICAL VIEW AND CROSS SECTION OF HIGH PRESSURE PUMP
1.CYLINDER - **2.** CAM - **3.** PLATE INLET VALVE - **4.** BALL DELIVERY VALVE - **5.** PISTON - **6.** PUMP SHAFT - **7.** LOW PRESSURE FUEL INLET - **8.** HIGH PRESSURE FUEL DELIVERY - **9.** FUEL BACKFLOW

High-pressure pump (F1A engine)

This pump is similar to the 8140 engine one.

It differs in Rail line pressure, modulated at between 250 and 1600 bars by the electronic centre by acting on the pressure regulator electro valve and is not provided with a 3rd pump cutout electro valve (78015).

Pump (3) is oriented on the pump shaft cam.

During aspiration the pump is powered via supply conduit (5).

The amount of fuel to be sent to the pump is set by pressure regulator (7).

The pressure regulator stops fuel inflow to the pump based on PWM input from the centre.

During pump compression, fuel reaches a pressure level sufficient to open the pressure valve to common rail (2), and supplies it via output (1).

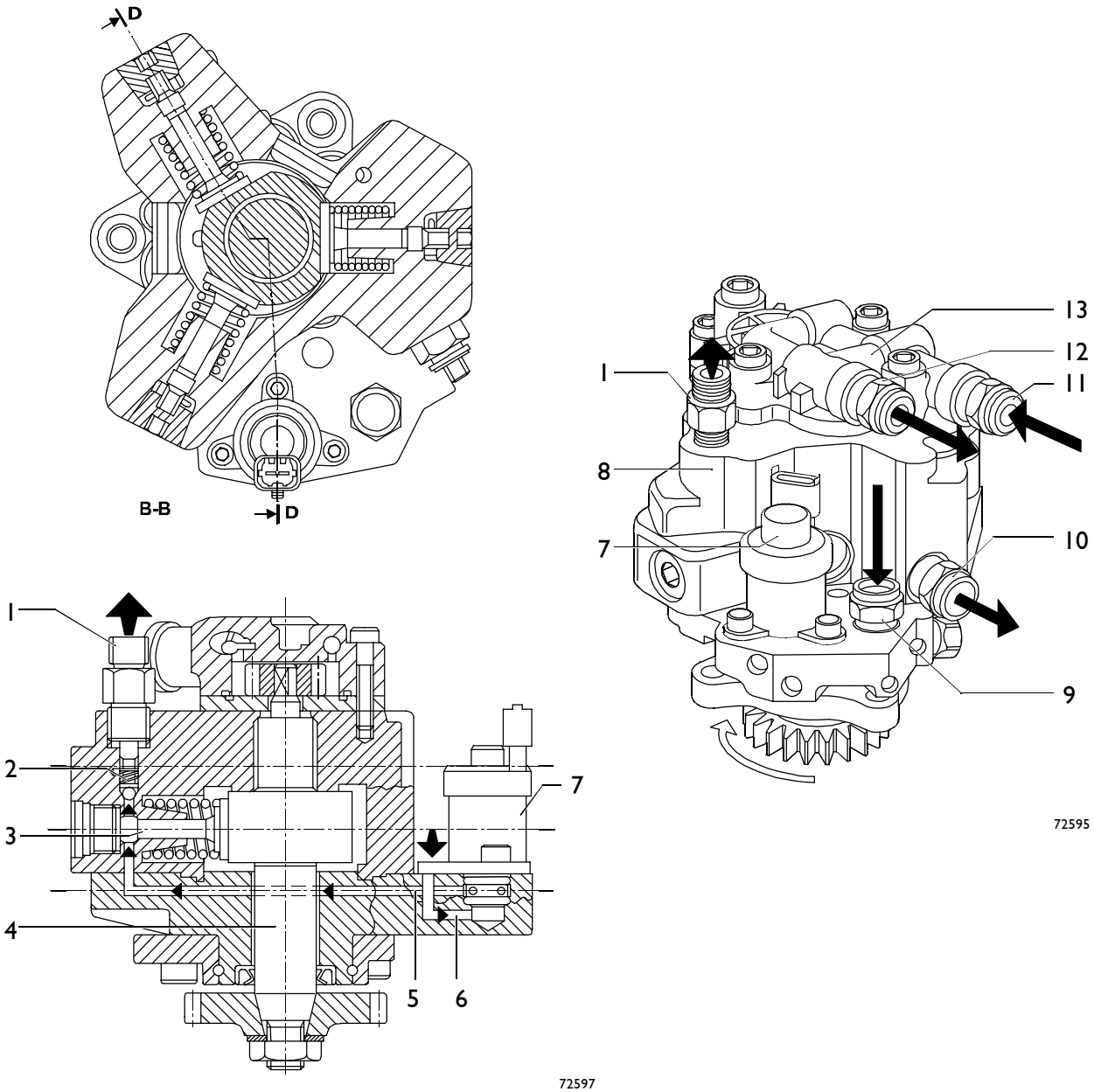

IV.67 **1.** OUTPUT FOR RAIL PRESSURE – **2.** RAIL PRESSURE VALVE – **3.** PUMP – **4.** PUMP SHAFT – **5.** PUMP SUPPLY CONDUIT – **6.** PRESSURE REGULATOR SUPPLY CONDUIT – **7.** PRESSURE REGULATOR – **8.** HIGH PRESSURE PUMP – **9.** FUEL INPUT CONNECTION FROM FILTER - **10.** FUEL OUTPUT CONNECTION TO FILTER SUPPORT - **11.** FUEL INPUT CONNECTION FROM CENTRE HEAT EXCHANGER - **12.** FUEL OUTPUT CONNECTION FROM MECHANICAL PUMP TO FILTER - **13.** SUPPLY MEHANICAL PUMP

Pressure regulator

This is located on the high pressure pump and modulates the fuel pressure to the rail (and thus to the injectors) on the basis of the commands received from the electronic control unit.

It mainly comprises:

- a ball shutter (1)
- a valve (3) control pin (2)
- a preloading spring (4)
- a coil (5)

When the solenoid is not energised, the delivery pressure depends only on the spring preload.

When, after processing the various engine operating parameters, the electronic control unit determines the need for a different injection pressure, it modulates a command signal in PWM to the regulator solenoid valve which discharges the excess pressure in the pump backflow duct.

The modulated pressure is checked through the pressure sensor on the rail by the control unit, which, if necessary, suitably modifies the intensity of the command signal to reach the required result.

The control solenoid valve (78013) is connected to pins 9 and 20 of connector A of the control unit.

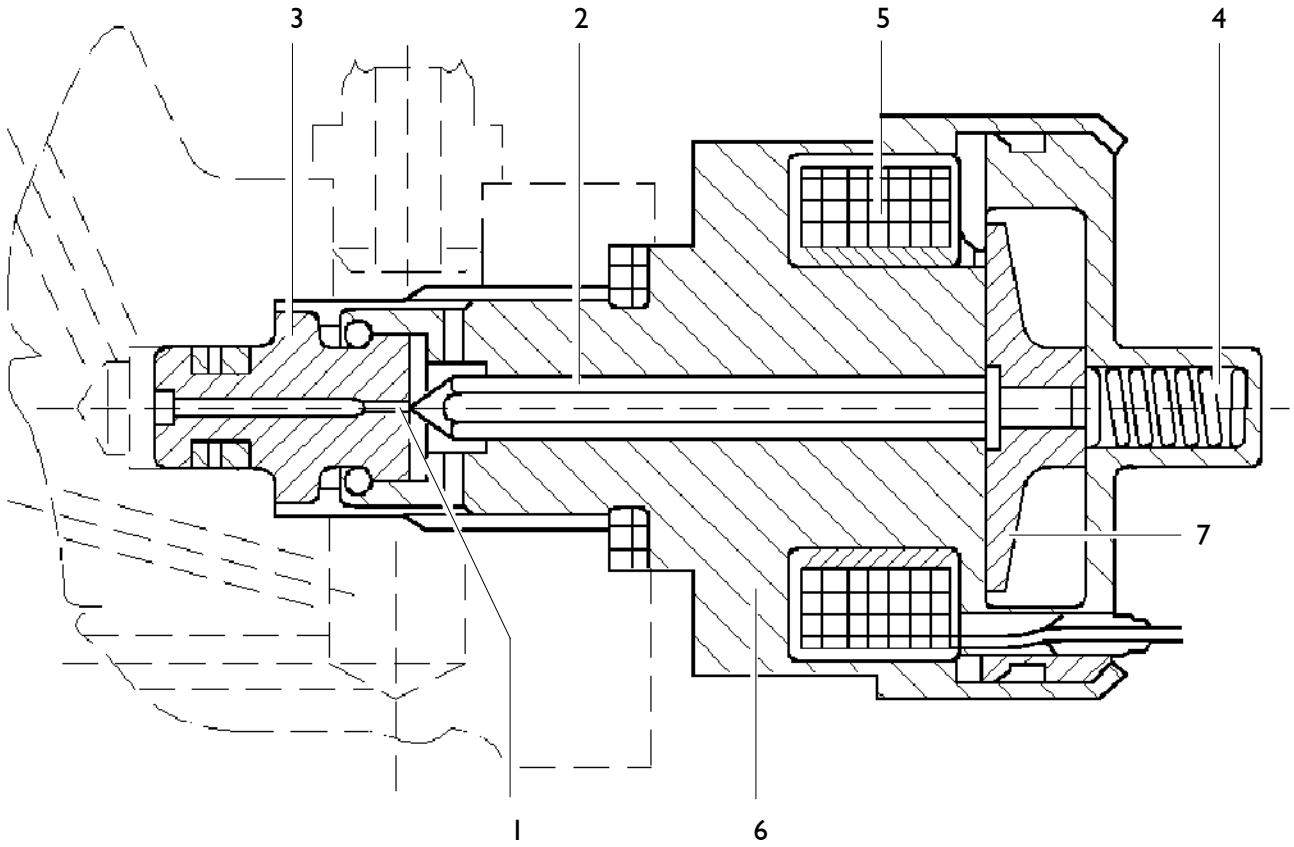

IV.68 PRESSURE REGULATOR CROSS SECTION
1.BALL SHUTTER - **2.** PIN - **3.** VALVE - **4.** PRELOADING SPRING - **5.** COIL - **6.** BODY - **7.** ANCHOR

Pressure regulator (F1A)

Similar to the one installed on the 8140 engine and mounted on the CP3 pump low-pressure circuit.

When the engine control centre pilots the pressure regulator via the PWM signal, solenoid (1) is activated, which in its turn generates movement of magnetic core (2).

Core movement causes cylinder (3) axial displacement by fuel delivery partialization.

When solenoid (1) is not activated, the magnetic core is moved to its rest position by preload spring (6).

In these conditions, cylinder (3) is in a position to offer maximum fuel passage cross-section.

Control electro valve 78013 is connected to centre connector A pins 9 and 20.

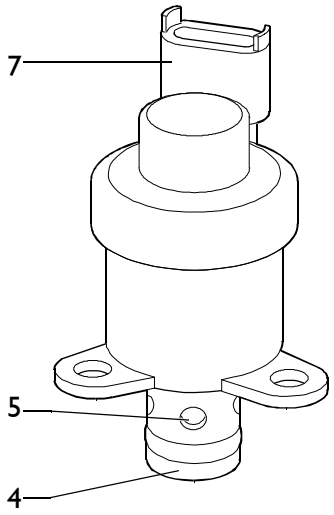

003386t

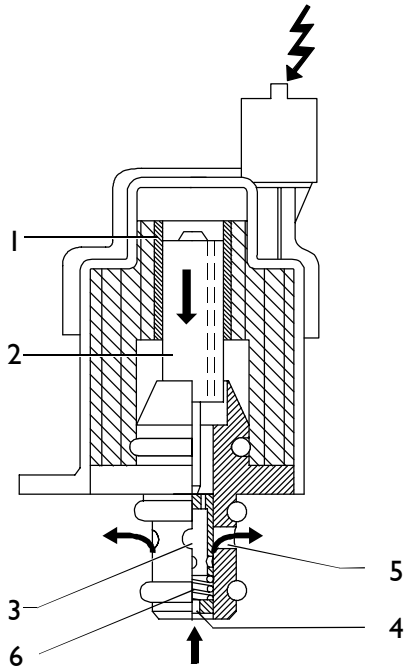

75574

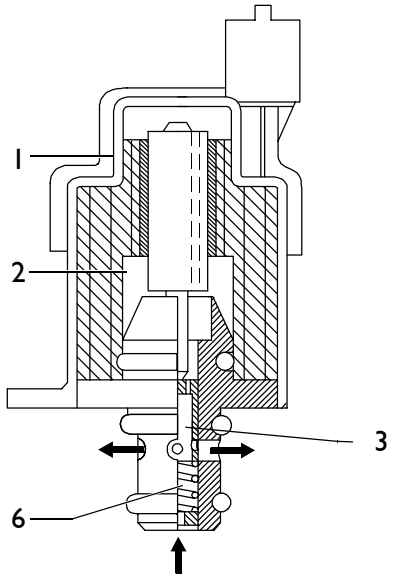

75575

IV.69 **1**. SOLENOID – **2**. MAGNETIC CORE – **3**. CYLINDER – **4**. FUEL INPUT – **5**. FUEL OUTPUT – **6**. PRELOIAD SPRING – **7**. CONNECTOR

Rail (pressure accumulator)

The volume of the rail is small in size (29 cc) to allow quick pressurising when starting, at idle speed and in the event of high loads.

It has however sufficient volume to minimise the plenum effect caused by opening and closing of the injectors and operation of the high pressure pump.

Screwed onto the rail there is a fuel pressure sensor. The signal sent by this sensor to the electronic control unit is feedback information on the basis of which correct actuation of the rail pressure is checked.

Common Rail for engines with serial numbers over 3089322

Temporary solution with simulated flow limiters and over pressure valve connected to the fuel discharge unit.

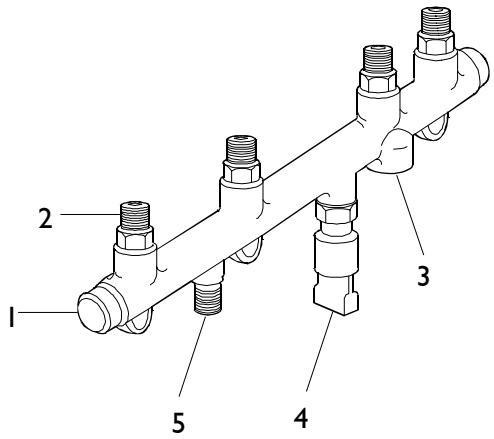

IV.70 **1.** COMMON RAIL - **2.** SIMULATED FLOW LIMITER - **3.** SIMULATED OVER PRESSURE VALVE SEAT - **4.** PRESSURE SENSOR - **5.** FUEL INPUT FROM HIGH-PRESSURE PUMP

Common Rail for engines produced since end-October 2000

Final Common Rail solution without flow limiters and over pressure valve. The new Common Rail features different pressure sensor layout and discharge unit connection predisposition.

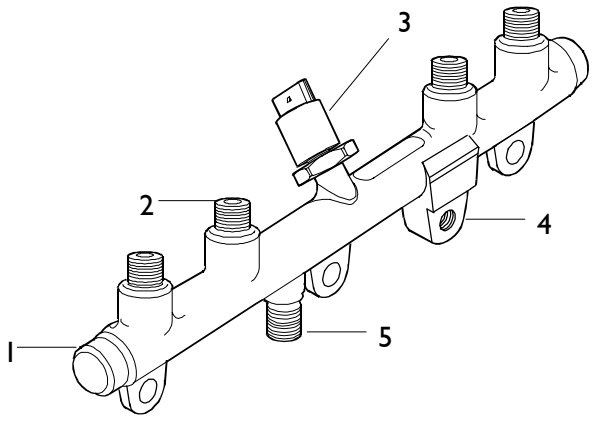

IV.71 **1.** COMMON RAIL - **2.** TO ELECTRICAL INJECTORS - **3.** PRESSURE SENSOR - **4.** FUEL DISCHARGE UNIT ATTACHMENT - **5.** FUEL INPUT FROM HIGH-PRESSURE PUMP

Rail (pressure accumulator - F1A)

The hydraulic accumulator is mounted in the cylinder head on the side opposite aspiration.

Its some 22-cm3 volume dampens fuel pressure oscillations due to:

– high-pressure pump operation
– electro injector opening.

The fuel sensor and overpressure valve are positioned on the hydraulic accumulator.

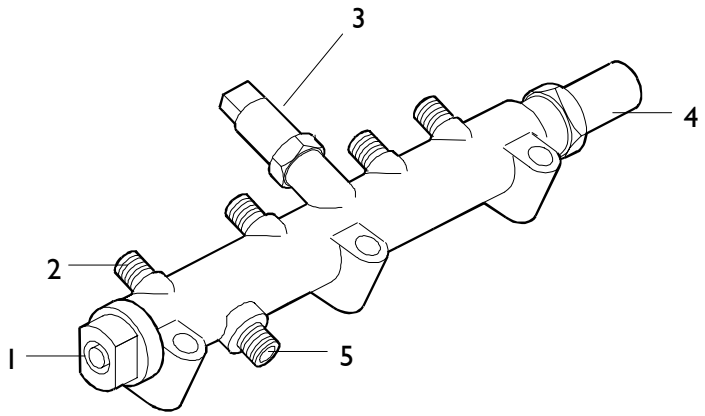

75576

IV.72 **1.** COMMON RAIL - **2.** TO ELECTRO INJECTORS - **3.** FUEL PRESSURE SENSOR - **4.** OVERPRESSURE VALVE - **5.** FUEL INPUT FROM HIGH PRESSURE PUMP

Over pressure valve

The over pressure valve protects system components in the event that fuel pressure exceeds rated 1750 bars.

A The piston's conical end normally keeps discharge to tank open.

B In the event of fuel pressure being over 1750 bars in the rail, the piston is relocated and excess pressure is discharged into the tank.

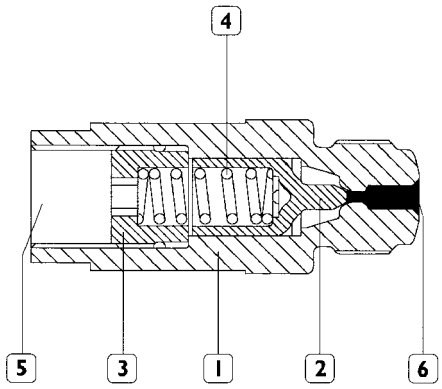

70500

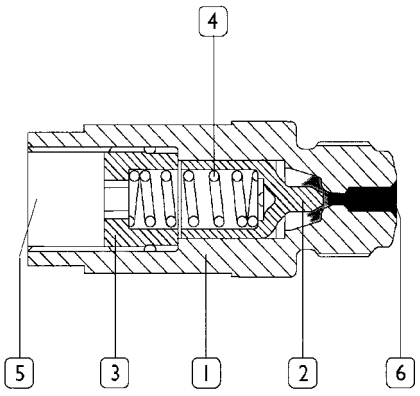

70502

IV.73 IVER PRESSURE VALVE
1. BODY - **2.** PISTON - **3.** STOP - **4.** SPRING - **5.** DIRECT DISCHARGE TO TANK - **6.** SEAT ON THE RAIL

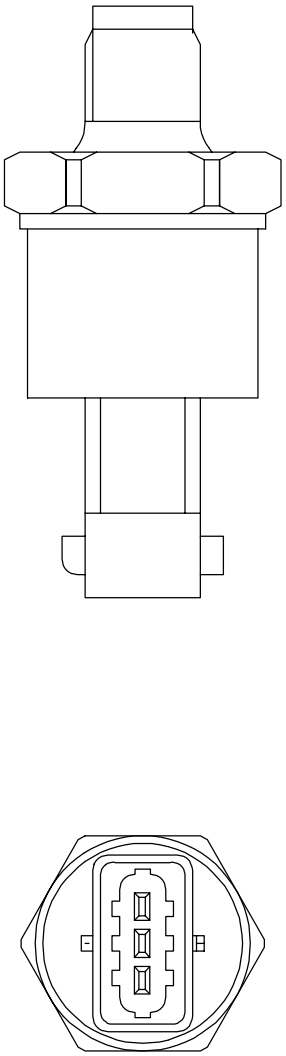

IV.74 TECHNICAL VIEW OF COMPONENT AND LIMITER CONNECTOR

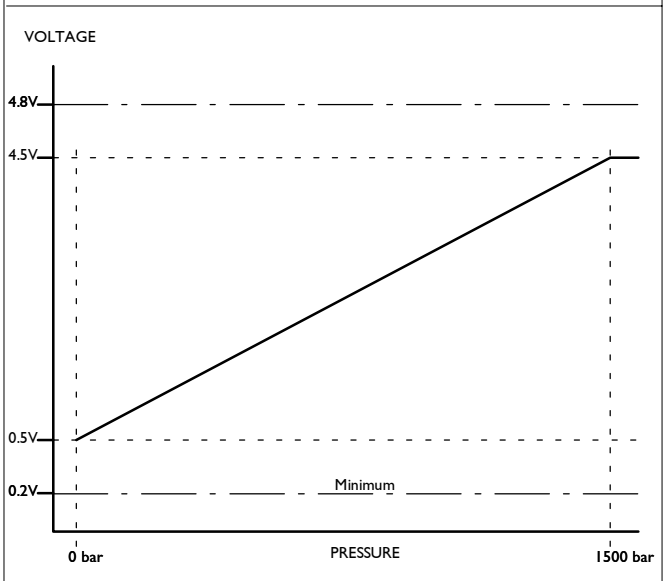

IV.75 PRESSURE LIMITER OPERATING GRAPH

Flow limiters

These are located on the rail fuel outlet and their function is to protect the engine or vehicle in the event of internal leaks (for example, atomiser blocked open) and external leaks (example: high pressure pipe damaged).

Under these circumstances they also allow, within certain limits, the system to work through the components that are still intact.

The passage of fuel from the rail to the injectors takes place through the holes machined on the small diameter of the piston.

Under normal conditions, the fuel pressure is exerted on both sides of the piston, held n the open position by the spring.

In the event of a heavy loss of pressure downstream of the limiter, the inlet pressure becomes preponderant and moves the piston from the opposite side, obstructing the fuel outlet.

Pressure limiter

The pressure limiter (1500 bar) screwed in the rail, serves to protect the system components in the event of a failure to the pressure regulator on the pump.

If the pressure of the fuel in the rail exceeds 1500 bar the piston is raised and the excess pressure is eliminated.

Fuel pressure sensor

This is fitted at the centre of the rail and measures the existing fuel pressure in order to determine the injection pressure.

The injection pressure value is used as feedback for closed loop pressure control and to determine the duration of the electric command for injection.

It is connected to pins 6, 13 and 33 of connector A of the control unit.

It is supplied at 5 Volt.

Injectors

The solenoid valve controls the lift of the atomiser needle.

On the fuel inlet union a filter protects the injector for impurities. The injector is constructively the same as conventional ones, except that there is no needle return spring.

Access to the injectors is gained by releasing the side soundproof cover from the cylinder head. The fuel recovery pipe has a quick coupling.

The injector comprises two parts:

– actuator - atomiser composed of pressure rod (1), pin (2) and nozzle (3)
– control solenoid valve comprising a coil (4) and drive valve (5).

1st phase: rest position

The coil (4) is not activated and the shutter (6) is in the closed position.

The same fuel pressure acts in both the control area (7) and in the pressure chamber (8), but as the shutter (6) is closed, the needle (2) cannot be raised.

2nd phase: start of injection

The coil (4) is energised and causes the shutter (6) to move upwards.

The fuel of the control volume (9) flows towards the backflow duct (10) causing a drop in the pressure in the control area (7).

At the same time, the pressure of the fuel in the pressure chamber (8) causes the needle (2) to rise, resulting in fuel injection to the cylinder.

3rd phase: end of injection

The coil (4) is not activated and makes the shutter (6) return to the closed position, which re-creates a balance of forces that makes the needle (2) return to the closed position and consequently end injection.

Injectors (78247)

The solenoid valve is of the N.C. type.

The injectors are connected individually to the control unit at the following pins:

– A12 / A40 cylinder 1 injector
– A10 / A43 cylinder 2 injector
– A23 / A42 cylinder 3 injector
– A24 / A41 cylinder 4 injector

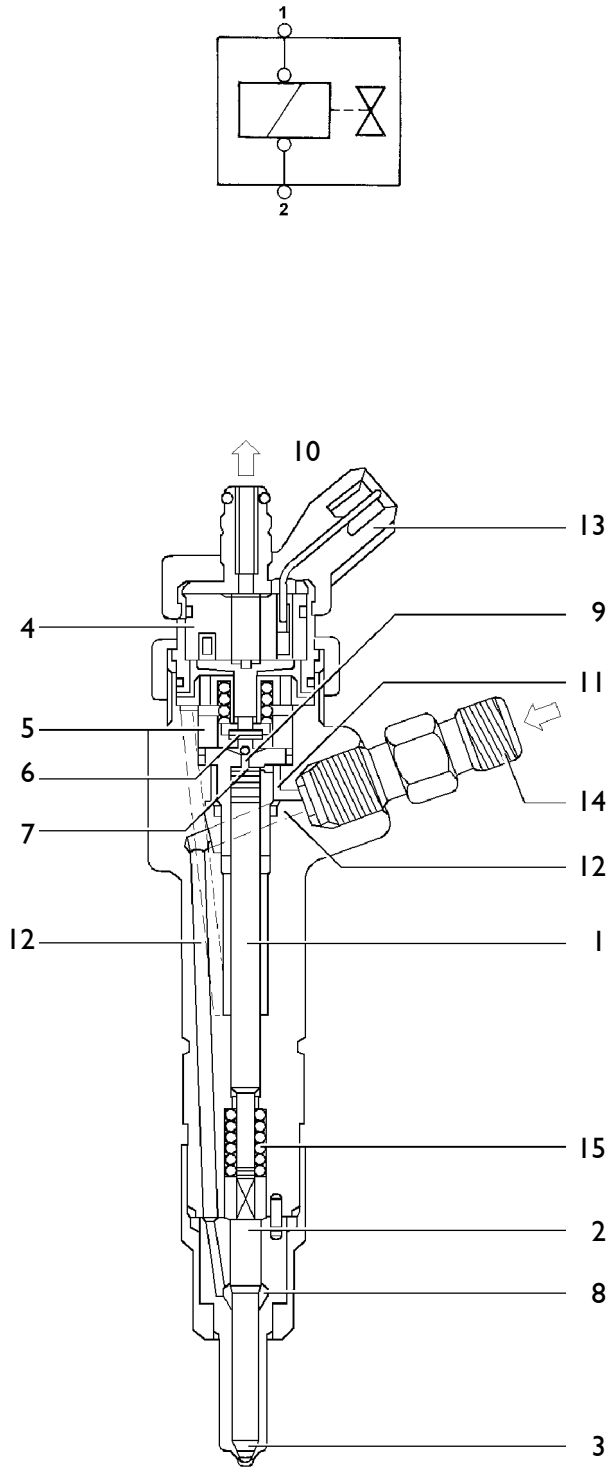

IV.76 INJECTOR WIRING DIAGRAM AND CROSS SECTION
1. PRESSURE ROD **- 2.** NEEDLE **- 3.** NOZZLE **- 4.** COIL **- 5.** PILOT VALVE **- 6.** BALL SHUTTER **- 7.** CONTROL AREA **- 8.** PRESSURE CHAMBER **- 9.** CONTROL VOLUME **- 10.** BACKFLOW DUCT **- 11.** CONTROL DUCT **- 12.** SUPPLY DUCT **- 13.** ELECTRICAL CONNECTION **- 14.** HIGH PRESSURE FUEL INLET **- 15.** SPRING

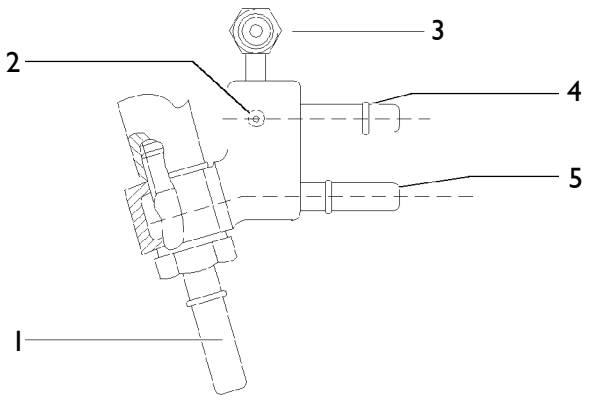

IV.77 FUEL OUTLET UNIT
1. FUEL OUTLET TO TANK - 2. RETURN FROM INJECTORS - 3. DELIVERY TO THERMAL STARTER - 4. LEADING FROM HIGH PRESSURE PUMP- 5. ARRIVAL FROM FILTER

Fuel outlets unit

All the outlets, overpressure and backflows of the various hydraulic components converge in this unit.

Part of them is made available to the thermal starter, while the rest returns to the fuel tank.

In the unit there is a 2,3 mm diameter drain hole.

This hole regulates the whole outlet system to maintain a constant counter pressure of 0,5 bar, which is indispensable for correctly supplying the thermal starter and it ensures flow rates which prevent overheating of the fuel.

The calibrated hole is made in a union similar to the other unions. In the event of work on the system, take care not to fit another different union in its place as this would cause serious operating failures.

Air flow meter

This component incorporates a temperature sensor and a pressure sensor.

It is fitted on the engine intake manifold (Fig. IV.79) and measures the maximum flow rate of the intake air which is used to accurately calculate the amount of fuel to be injected at each cycle.

It is connected to the control unit on pins A2 / A3 / A19 / A34.

Pin 1 sensor - Pin A19 ECU - earth -

Pin 2 sensor - Pin A2 ECU - temperature signal

Pin 3 sensor - Pin A3 ECU - 5V - supply

Pin 4 sensor - Pin A34 ECU - 0 ÷ 5V pressure signal -

Course of sensor in relation to the temperature

Temperature	Resistance
- 40 °C	48.50 kOhm
- 20 °C	15.67 kOhm
0 °C	5.86 kOhm
20 °C	2.50 kOhm
40 °C	1.17 kOhm
60 °C	0.59 kOhm
80 °C	0.32 kOhm
100 °C	0.18 kOhm
120 °C	0.11 kOhm

Course of sensor in relation to the pressure:

See graph opposite.

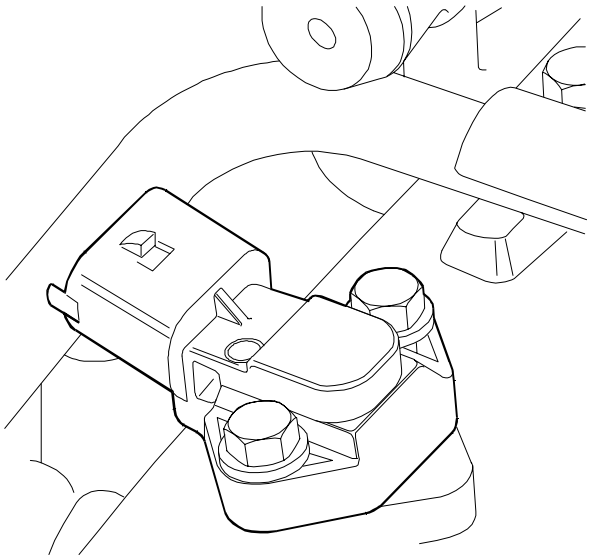

8660

IV.78 AIR FLOW METER

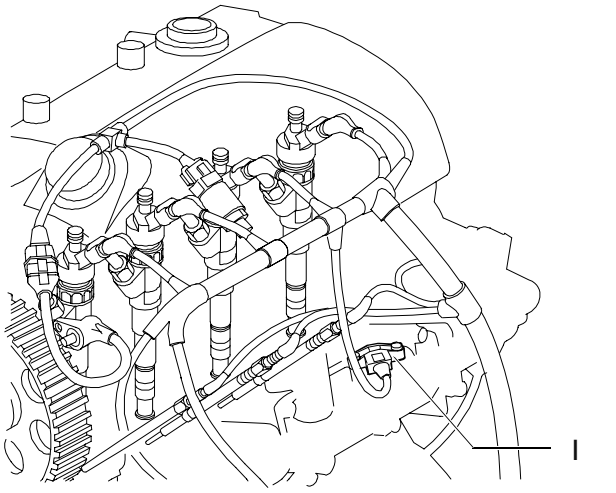

003323t

IV.79 1. AIR FLOW METER LOCATION

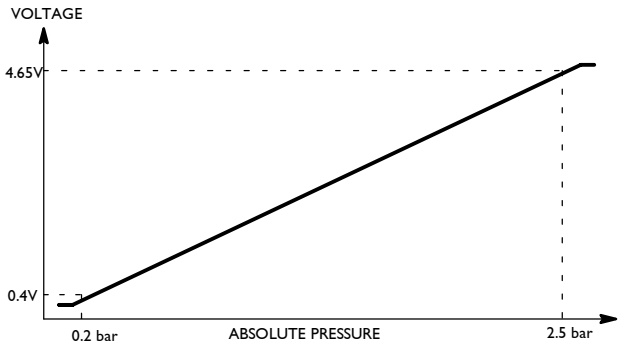

IV.81 AIR FLOW METER OPERATING GRAPH

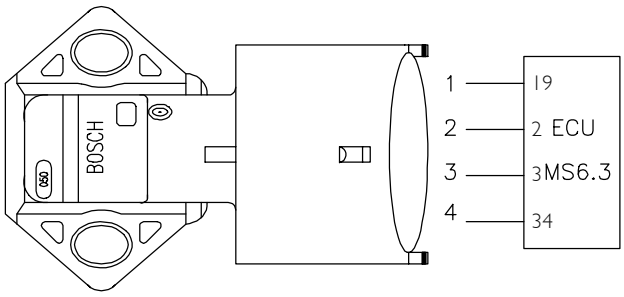

IV.80 AIR FLOW METER CONNECTION

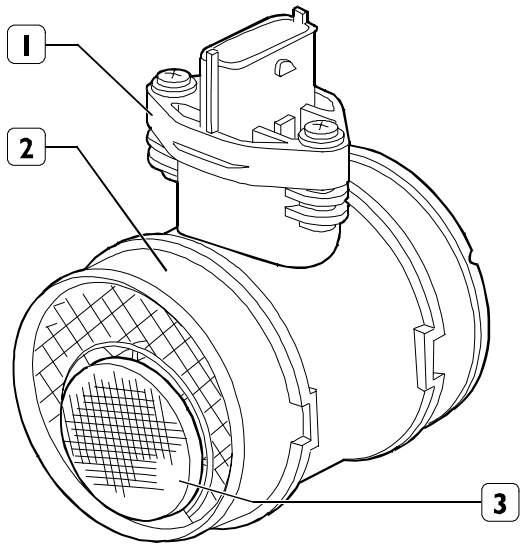

003333t

IV.82 **1.** CONNECTOR - **2.** GAUGE BODY - **3.** AIR INPUT GRID

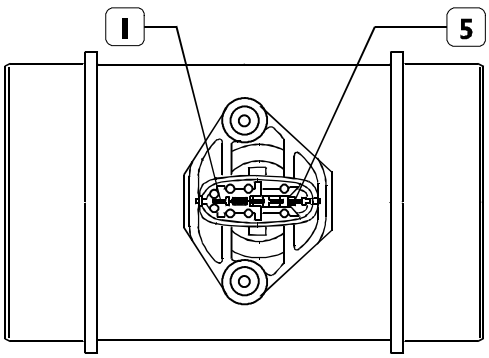

003334t

IV.83 TECHNICAL VIEW OF GAUGE CONNECTOR

Air delivery gauge

Used in the EGR version to replace the one mounted on the engine aspiration manifold.

The gauge is of the heated film type and is located o their aspiration conduit between the turbine and the air filter.

The gauge contains the aspired air temperature sensor.

It is connected to the centre on pins **A5 / A17 / A18 / A26 / A28.**

Pin 1 sensor - Pin A5 ECU - temperature signal
Pin 2 sensor - Pin A17 ECU - 5V power supply
Pin 3 sensor - Pin A18 ECU - mass
Pin 4 sensor - Pin A26 ECU - reference voltage
Pin 5 sensor - Pin A28 ECU - pressure signal

The operating principle is based on a heated membrane inserted in a measurement canal through which air to the engine flows.

The hot film membrane is kept at a constant temperature some 120 °C above incoming air level by the heating resistor.

The air mass traversing the measurement canal tends to subtract heat from the membrane so current must cross the resistor to maintain constant film temperature.

Current absorbed is proportional to the air mass flowing to the engine and is measured with a Wheatstone bridge and the signal is forwarded to the electronic centre.

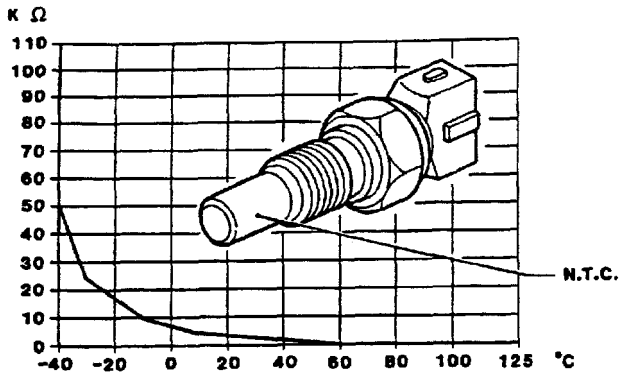

IV.84 COURSE OF SENSOR RESISTANCE IN RELATION TO TEMPERATURE

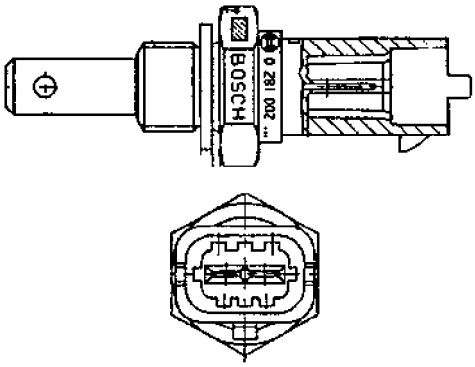

IV.85 TECHNICAL VIEW OF ENGINE COOLANT TEMPERATURE SENSOR

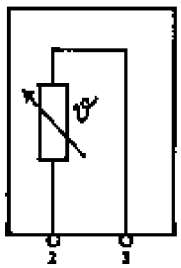

NTC

IV.86 WIRING DIAGRAM

Atmospheric pressure sensor

This is integrated inside the control unit.

It measures the atmospheric pressure to correct the flow rate in relation to the altitude.

Engine coolant temperature sensor

This is an NTC sensor located on the thermostat box.

It detects the temperature of the coolant fluid to give the control unit information about the engine temperature conditions.

It is connected to pins 1 and 30 of connector A of the control unit.

Course of the sensor in relation to the temperature:

Temperature	Resistance
- 40°C	48.30 kOhm
- 20°C	15.46 kOhm
0°C	5.89 kOhm
20°C	2.50 kOhm
40°C	1.17 kOhm
60°C	0.59 kOhm
80°C	0.32 kOhm
100°C	0.19 kOhm
120°C	0.11 kOhm

Fuel temperature sensor

This is an NTC sensor located on the fuel filter.

It detects the temperature of the fuel to give the control unit information about the fuel oil temperature conditions.

It is connected to pins 15 and 30 of connector A of the control unit.

It is exactly the same as the engine coolant temperature sensor.

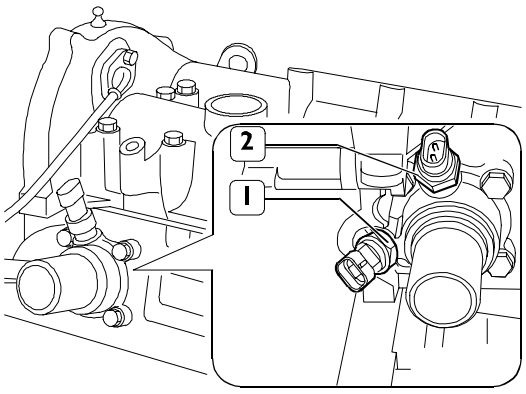

003324t

IV.87 LOCATION OF F1A ENGINE COOLANT TEMPERATURE SENSOR
1. EDC
2 SIGNAL INSTRUMENT PANEL SIGNAL

The accelerator pedal position sensor is of the potentiometric type with incorporated N.O. minimum switch.

It gives the electronic control unit a value proportionate with the operating angle of the pedal itself determining fuel delivery.

It is supplied at 5 Volt.

The potentiometer resistance is approx. ~ 1 kOhm.

It is connected at pins 2, 13, 27, 29 and 35 of connector B of the control unit.

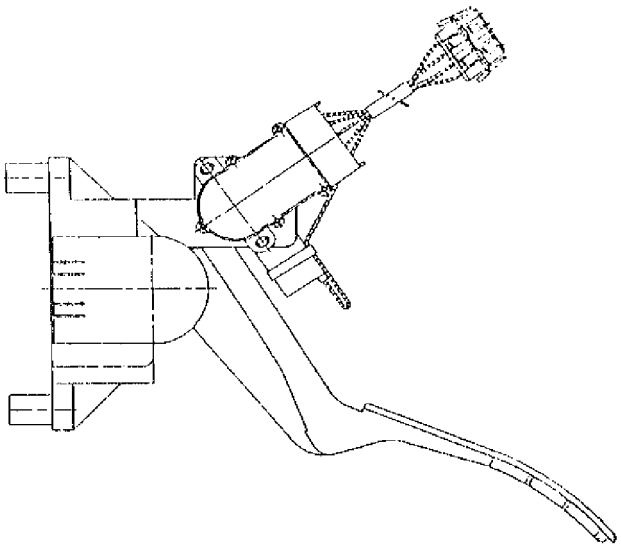

IV.88 LOCATION OF SENSOR ON ACCELERATOR PEDAL

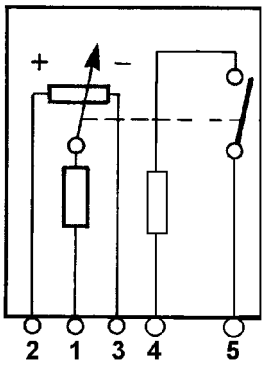

IV.89 SENSOR WIRING DIAGRAM

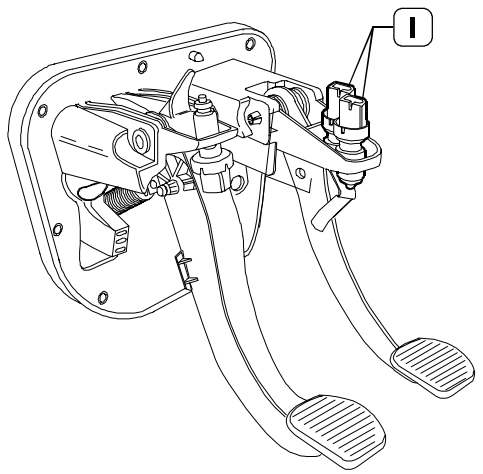

IV.90 **1.** BRAKE PEDAL SWITCHES

Brake pedal switches

Two switches are located on the brake pedal; N.C. 53565 si connected directly to electronic centre pin B31 and 53501 is connected to the centre via remote switch 25006 for stop light actuation and to generate a redundant signal on the centre increasing system reliability degree.

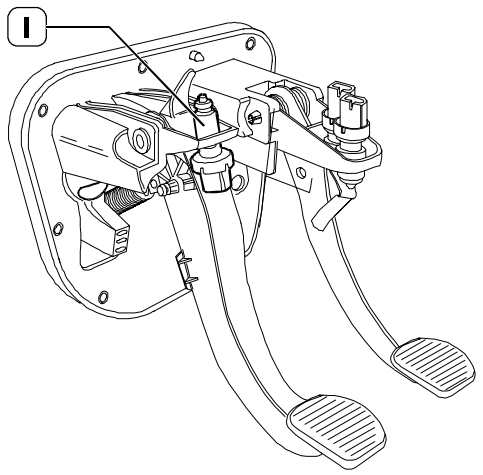

IV.91 **1.** CLUTCH PEDAL SWITCH

Clutch pedal switch

An N.C. switch connected to electronic centre pin B38 is mounted on the clutch pedal.

The "clutch pedal actuated signal" is used by the centre to identify gear condition selected and gear shifts.

In absence of the pedal pressed switch signal, the centre disenables the Cruise Control function.

Electromagnetic junction fan

The fan is provided with an electromagnetic junction monitored by the electronic centre pin A39 that activated the junction remote control switch, to optimise water cooling.

The electrical fan remote control switch is activated or deactivated by the centre according to the temperature of:

- the coolant
- over supply air
- the fuel

Engine coolant temperature

Activated at over 96 °C and deactivated at under 84 °C

Over supply air temperature

Activated at over 75 °C and deactivated at under 65 °C

Fuel temperature

Activated at over 20 °C and deactivated at under 10 °C

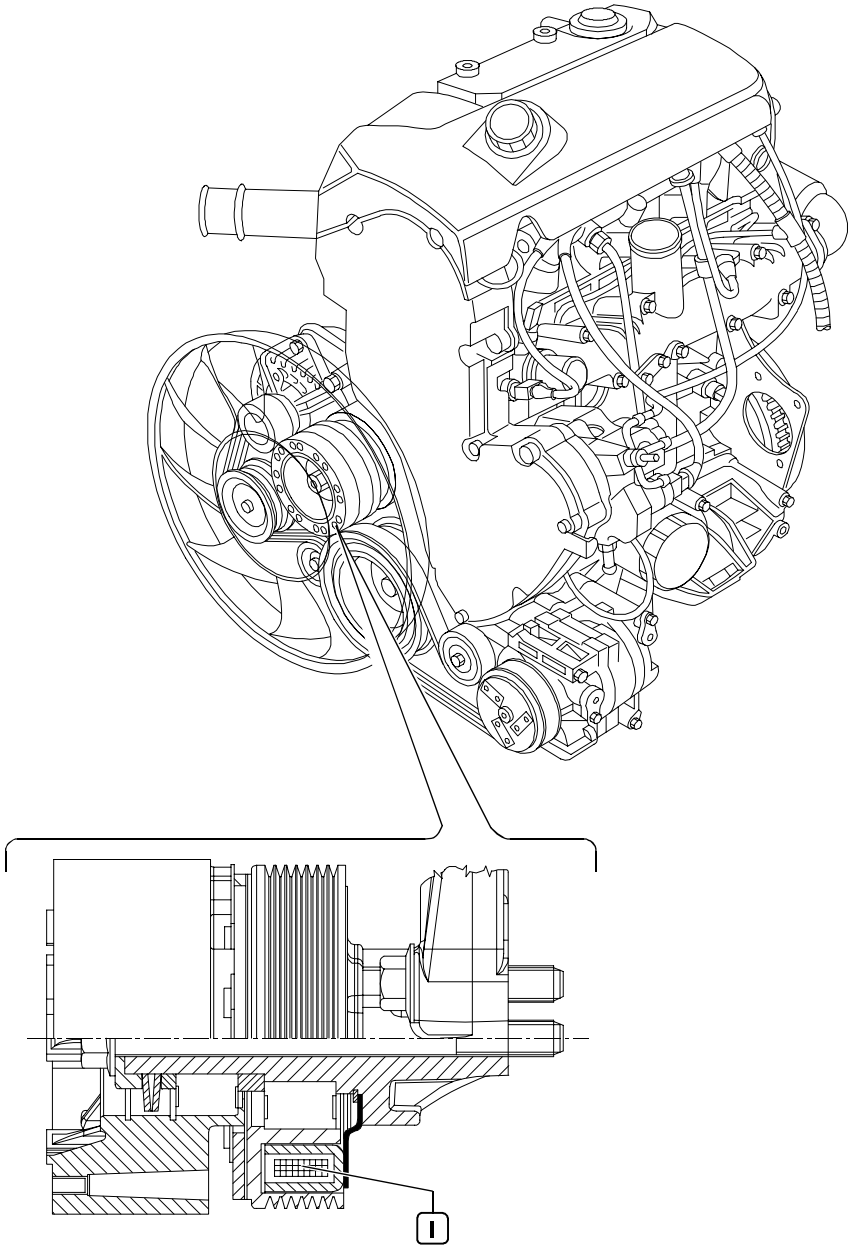

003328t

IV.92 ELECTROMAGNETIC JUNCTION TECHNICAL VIEW0 (F1A)
1. COIL

Preheat plug electronic centre (F1A engine)

The preheat centre contains an "intelligent" remote control switch that sends a feed-back to the control centre for information on any preheat centre defect or plug earth shirt circuit.

Preheat centre pin-out

31 - Mass
86 - Start switch (+15)
ST - EDC electronic centre (pin B42)
DI - EDC electronic centre (pin B37)
30 - Battery positive (+30)
G1 - Preheat plugs
G2 - Preheat plugs
G3 - Preheat plugs
G4 - Preheat plugs

Preheat plugs

CONTROL VALUES

With constant di 11V power supply:

– maximum current absorbed	18 A
– in 5"	11 ± 1,5 A
– in 30"	6 ± 0.9 A
– temperature after 7"	850°C
– torque	8-10 Nm

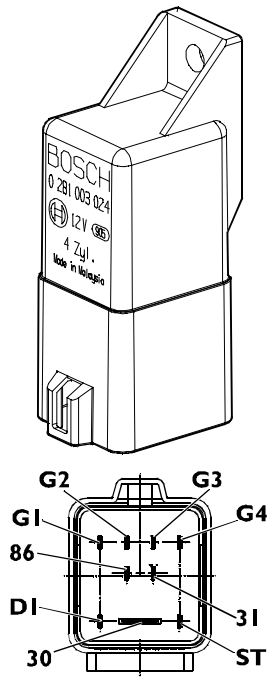

003332t

IV.93 PREHEAT CENTRE

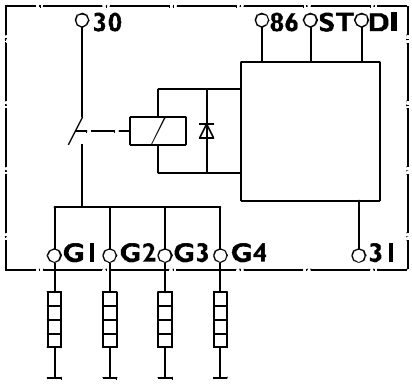

003331t

IV.94 ELECTRICAL DIAGRM

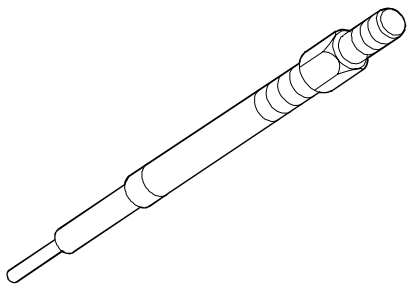

75579

IV.95 PREHEAT PLUS

EDC MS6.3 / EDC16
Electronic injection control

The system calculates injection on the basis of the processing of the following parameters:

– Engine rpm
– Engine coolant fluid temperature
– Intake air capacity
– Battery voltage
– Fuel pressure
– Accelerator pedal position

Fuel pressure ranges from 400 to 1350 bars (1600 for F1A engines), according to engine rpm and load operating conditions.

The lower pressure is compensated by longer injection times and vice versa, always taking account of the loads required.

Up to 2800 rpm pre-injection is also carried out in order to reduce the typical noise of direct injection.

Pre-injection advance angles, the distance between pre-injection and main injection and advance angles of main injection vary according to the instantaneous engine operating conditions.

SYSTEM OPERATION
Self-diagnosis

System diagnosis is performed by means of diagnostic instruments (no Blink Code is used).

Immobilizer recognition

When the control unit receives the signal of the key on "MAR" it communicates with the immobilizer control unit to enable starting.

Checking fuel temperature

With the fuel temperature greater than 75°C, detected by the sensor on the fuel filter, the control unit operates the pressure regulator to decrease the line pressure (injection times are not changed). If the temperature exceeds 90°C, the power is reduced to 60%.

Checking engine coolant temperature

The control unit, depending on the temperature:

- of the engine coolant, turbocharging air and fuel, operates the electromagnetic fan (Baruffaldi) and switches on the coolant temperature warning light.

Checking quantity of fuel injected

According to the signals from the sensors and the mapped values, the control unit:

- operates the pressure regulator;
- varies the "pilot" injection time to 2200 rpm;
- varies the "main" injection time.

Checking idling adjustment

The control unit processes the signals from the various sensors and regulates the amount of fuel injected:

- it operates the pressure regulator;
- it varies the injection times of the electro-injectors.

Within certain thresholds the speed takes account of the battery voltage.

Fuel cut-off in release phase

In the phase of releasing the throttle pedal the control unit actuates the following logic elements:

- it cuts off supply to the electro-injectors;
- it partially reactivates supply to the electro-injectors before reaching idling speed;
- it operates the fuel pressure regulator.

Checking cylinder balancing on idling

According to the signals received from the sensors, the control unit controls the regularity of the torque at idling speed:

- it varies the amount of fuel injected into the single electro-injectors (injection time).

Checking regular engine rotation (anti-sawing)

It ensures regular engine rotation at a constant rate while increasing revs.
The control unit processes the signals received from the sensors and determines the amount of fuel to be injected via:

- the pressure regulator;
- the electro-injector opening time.

Checking smokiness at exhaust on acceleration

With heavy acceleration, on the basis of the signals received from the air introduction meter and engine speed sensor, the control unit determines the optimum amount of fuel to inject:

- it operates the pressure regulator;
- it varies the electro-injector injection time.

Checking exhaust gas recirculation (E.G.R. if present)

Depending on the engine load and the signal from the accelerator pedal sensor, the control unit limits the amount of air taken in, actuating partial suction of the exhaust gases.

Checking top speed limit

Depending on the number of revs, the control unit actuates two action strategies:

- at 4250 rpm it cuts off the fuel, decreasing the electro-injector opening time Over 5000 rpm it deactivates the electro-injectors.

Checking regular rotation on acceleration

Regular progression is assured in all conditions by the control of the pressure regulator and the electro-injector opening time.

Heater starter control (8140 Engine)
Preheat plug centre control (F1A Engine)

During:

- the start step
- the after start step

the injection centre times the heater starter (or preheat plugs for the F1A Engine) according to engine temperature.

Checking activation of air-conditioning system

The control unit operates the air-conditioning compressor:

- switching it on/off when the relative switch is pressed;
- momentarily turning it off (approximately 6 sec.) if the engine coolant reaches the set temperature.

Checking fuel pump

Irrespective of the speed, the control unit:

- supplies the auxiliary fuel pump with the key on MAR;
- cuts off auxiliary pump supply if the engine is not started up within a few seconds.

Checking diesel warming

It times operation of diesel warming in relation to ambient temperature.

Checking cylinder position

During each turn of the engine, the control unit recognizes which cylinder is in the power stroke and operates the injection sequence for the appropriate cylinder.

Checking pilot and main injection timing

According to the signals from the various sensors, including the absolute pressure sensor built into the control unit, the control unit determines the optimum point of injection according to internal mapping.

Checking injection pressure closed cycle

Depending on the engine load, determined by processing the signals from the various sensors, the control unit operates the regulator to obtain optimum line pressure.

Fuel supply

The fuel supply is calculated in relation to:

- accelerator pedal position
- engine speed
- quantity of air introduced.

The outcome may be corrected in relation to:

- the water temperature.

Or to avoid:

- noise
- smoke
- overloading
- overheating
- turbine over-revving.

The delivery can be modified in the case of:

- action of external devices (ABS), ABD, EDB
- serious trouble decreasing the load or stopping the engine.

After determining the mass of air introduced by measuring its volume and temperature, the control unit calculates the corresponding mass of fuel to inject into the relevant cylinder (mg per delivery) also taking into account the temperature of the diesel.
The mass of fuel calculated in this way is first converted into volume (mm^3 per delivery) and then into degrees of throw, or duration of injection.

Correcting flow rate according to water temperature

A cold engine meets with greater resistance during operation: friction is high, the oil is still very viscous, and the various clearances are not yet optimized.
In addition, the injected fuel tends to condense on the metal surfaces that are still cold.
The fuel supply for a cold engine is therefore greater than for a warm one.

Correcting flow rate to avoid noise, smoke or overloading

The behaviour that could lead to this kind of trouble is well known.
The designer has therefore included special instructions in the control unit to avoid it.

De-rating

In the event of the engine overheating, injection is modified, decreasing the delivery to a varying degree, in proportion to the temperature reached by the coolant.

Turbine rpm setting (for the variable geometry turbo-compressor, where present, 8140.43N Engine)

By changing its geometry, adjusted turbine speed is monitored by the electronic centre via an electrical signal feeding the compressed air actuator electro valve. Based on signals from the accelerator pedal position and suction manifold air temperature/pressure engine rpm sensors, the electronic centre processes the field-back signal to properly modulate turbine actuator pilot electro valve opening.

Injection timing electronic test

The advance (start of delivery, expressed in degrees) may be different from one injection to the next, also differentiated from one cylinder to another. It is calculated, similarly to the delivery, in relation to the engine load (accelerator position, engine speed and air introduced).
The advance is appropriately corrected:

- in phases of acceleration;
- according to the water temperature.

And also to obtain:

- lower emissions, noise and overloading;
- better vehicle acceleration.

An extremely high advance is set on starting, depending on the water temperature.
Feedback from the start of delivery is supplied by the change in impedance of the injector solenoid valve.

Speed governor

The electronic speed governor has both features of governors:

- idling and top speed
- all speeds

It is stable in ranges where conventional, mechanical governors are imprecise.

Engine starting

During the first few turns of the engine, the timing and cylinder no. 1 recognition signals (flywheel sensor and camshaft sensor) are synchronized.
The accelerator pedal signal is ignored on starting. Starting delivery is set only according to water temperature, by a special map.
When the control unit detects such speed and acceleration of the flywheel as to be able to consider the engine started up and no longer driven by the starter motor, it re-enables the accelerator pedal.

Cold starting

If even just one of the three temperature sensors (water, air or diesel) records a temperature lower than 10°C, pre-post heating is activated.
When the key makes contact the pre-heating indicator light comes on and stays on for a length of time that varies in relation to the temperature (while the glow plugs in the cylinder head heat the air), then flashes. It is now possible to start up the engine.
When the motor is running this indicator light goes out, while the glow plugs continue to be powered for a certain length of time (variable) for post-heating.
If, with the indicator light flashing, the engine is not started up within 20-25 seconds (inattention time), the operation is cancelled so as not to run down the batteries pointlessly.
The pre-heating curve is also variable in relation to the battery voltage.

Warm starting

If the reference temperatures all exceed 10°C, when the key makes contact the indicator light comes on for approximately 2 sec., for a short test, and then goes out. It is now possible to start up the engine.

Run up

When the key makes contact, the control unit transfers the information stored in memory when the engine was last stopped into the main memory (see After Run) and makes a diagnosis of the system.

After run

Whenever the engine is switched off with the key, the control unit stays powered for a few seconds by the main relay.
This makes it possible for the microprocessor to transfer some data from the main memory (volatile) to a non-volatile memory, which can be erased and written over (EEPROM), so as to make it available at the next start up (see Run Up).

These data basically consist of:

- various settings (engine idling adjustment, etc.);
- settings of some components;
- fault memory.

The process lasts a few seconds, typically from 2 to 7 (depending on the amount of data to save), after which the ECU sends a command to the main relay and makes it disconnect from the battery.



It is extremely important for this procedure not to be broken off, for example by switching off the engine with the battery cut-out, or by disconnecting the battery cut-out before 10 seconds have passed since switching off the engine.
If this happens, the functioning of the system is ensured, but repeated interruptions may damage the control unit.

Cut - off

This function cuts off fuel delivery when the vehicle is decelerating (accelerator pedal released).

Cylider balancing

Individual cylinder balancing contributes to increasing comfort and handling.
This function permits individual, customized control over the delivery of fuel and the start of delivery for each cylinder, even differently from one cylinder to another, to compensate for the hydraulic tolerances of the injector.

The differences in flow (delivery specifications) between the various injectors cannot be evaluated directly by the control unit. This information is supplied by Modus reading the bar code of each injector at the time of assembly.

Synchronisation search

If there is no signal from the camshaft sensor, the control unit is anyhow able to recognize the cylinders into which the fuel is to be injected.
If this occurs when the engine is already running, the combustion sequence has already been acquired, so the control unit continues with the sequence on which it has already been synchronized.
If this occurs when the machine is at a standstill, the control unit energizes a single solenoid valve. Within at most 2 turns of the crankshaft, injection will take place in that cylinder, so the control unit just needs to get synchronized on the firing sequence and to start up the engine.

BOSCH MS6.3 EDC CONTROL UNIT

85150

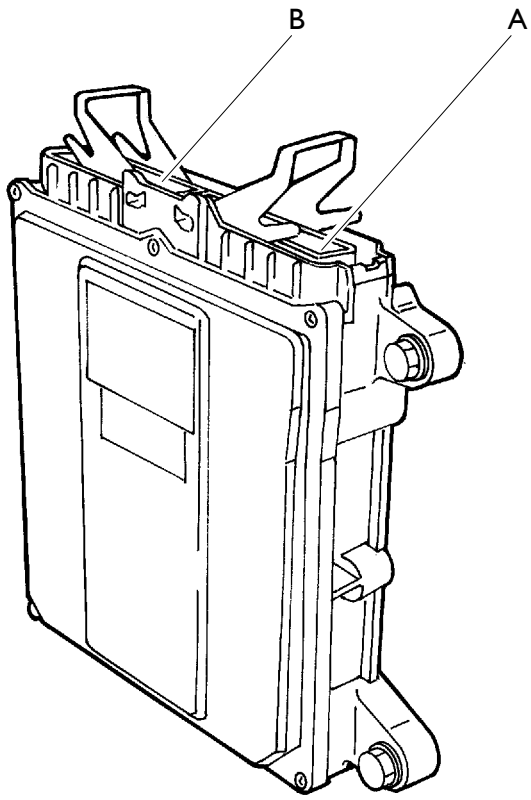

7420

IV.96 PERSPECTIVE VIEW
A. HOUSING FOR INJECTION CABLE CONNECTOR - **B.** HOUSING FOR CAB-BONNET CABLE CONNECTOR (UNIJET ENGINE)

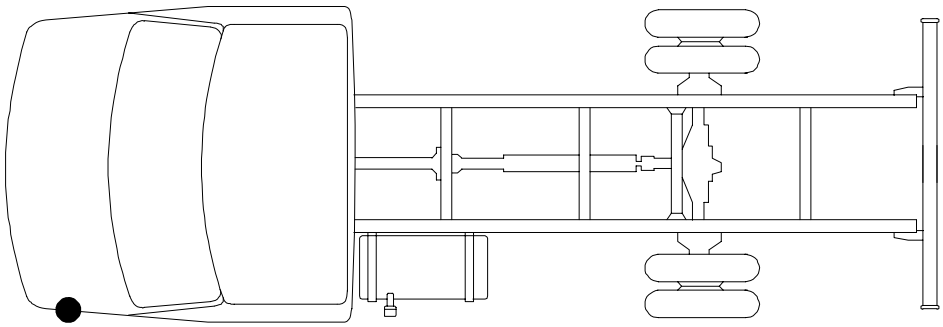

7406

LOCATION ON THE VEHICLE

Control unit connection to the injection cable on engine side (housing A)

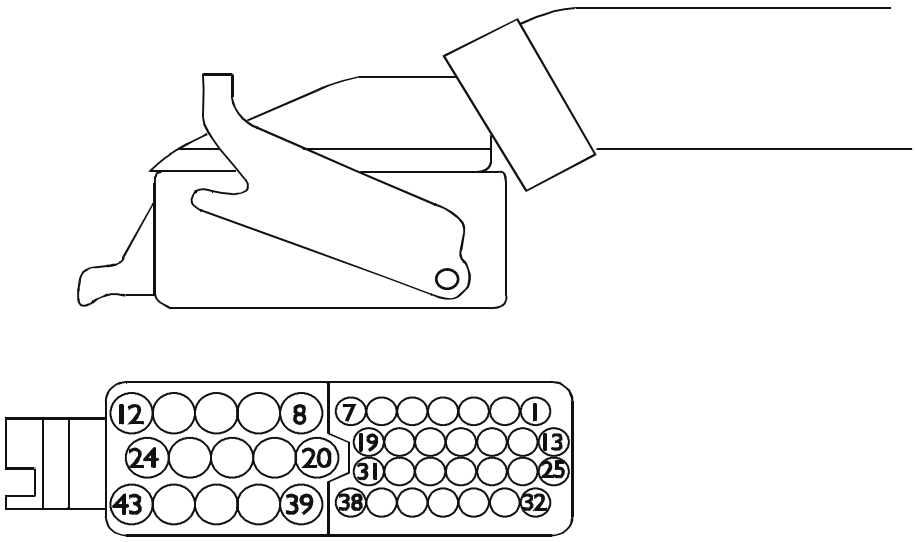

7421

IV.97 VIEW OF BOSCH 43-WAY CONNECTOR FROM CABLE INPUT SIDE

Pin	Function	Cable colour code
1	To engine coolant temperature sensor	5154
2	To turbo-blower air pressure and temperature sensor for EDC (without EGR)	5151
3	To turbo-blower air pressure and temperature sensor for EDC (without EGR)	5153
4	To engine rpm sensor on camshaft (cams)	White
5	To temperature sensor and ambient air pressure for EDC (with EGR)	5151
6	Fuel pressure adjustment sensor earth	0000
7	Control to relay for switching on fuel pump	8150
8	Common EDC centre mass – Centre monitored remote control switches - EGR electro valve	0000
9	To solenoid valve for pressure adjustment	9925
10	To solenoid valve for electronic injection (injector 2 - cylinder 3)	—
11	Spare	—
12	To solenoid valve for electronic injection (injector 1 - cylinder 1)	—
13	To solenoid valve for pressure adjustment	5590
14	Spare	—
15	Sensor (fuel temperature) for switching on fuel warming	5592
16	Spare	—
17	To ambient air temperature and pressure sensor for EDC (with EGR)	8150
18	To ambient air temperature and pressure sensor for EDC (with EGR)	8151
19	Air temperature and pressure sensor earth (without EGR)	0165
20	Earth shared by control unit and radialjet and pressure solenoid valves (no radialjet for F1A)	0000
21	To solenoid valve for radialjet pump control (not for F1A)	9917
22	Spare	—
23	To solenoid valve for electronic injection (injector 3 - cylinder 4)	—
24	To solenoid valve for electronic injection (injector 4 - cylinder 2)	—
25	To solenoid valve controlling anti-pollution system (EGR.) (.13 - F1A)	5577
26	To ambient air temperature and pressure sensor for EDC (with EGR)	8152
27	To speed limiter adjustment sensor	8847
28	To ambient air temperature and pressure sensor for EDC (with EGR)	8153
29	To sensor for engine rpm	White
30	Earth shared by control unit and temperature sensors	0150
31	To engine rpm sensor on camshaft (cams)	Black
32	Control to relay for heated fuel oil filter	8159
33	To sensor for fuel pressure adjustment	5591
34	To turbo-blower air pressure and temperature sensor for EDC (without EGR)	5152
35	Control to relay for engaging conditioner compressor	9990
36	To solenoid valve actuator for VGT (.15) or to WASTE GATE solenoid valve (.13)	5000
37	To engine rpm sensor (.13 - .15 - F1A)	Black
38	Spare	-
39	Control to relay for engine cooling joint	7740
40	To solenoid valve for electronic injection (injector 1 - cylinder 1)	—
41	To solenoid valve for electronic injection (injector 4 - cylinder 2)	—
42	To solenoid valve for electronic injection (injector 3 - cylinder 4)	—
43	To solenoid valve for electronic injection (injector 2 - cylinder 3)	—

Control unit connection to cab-bonnet cable (housing B)

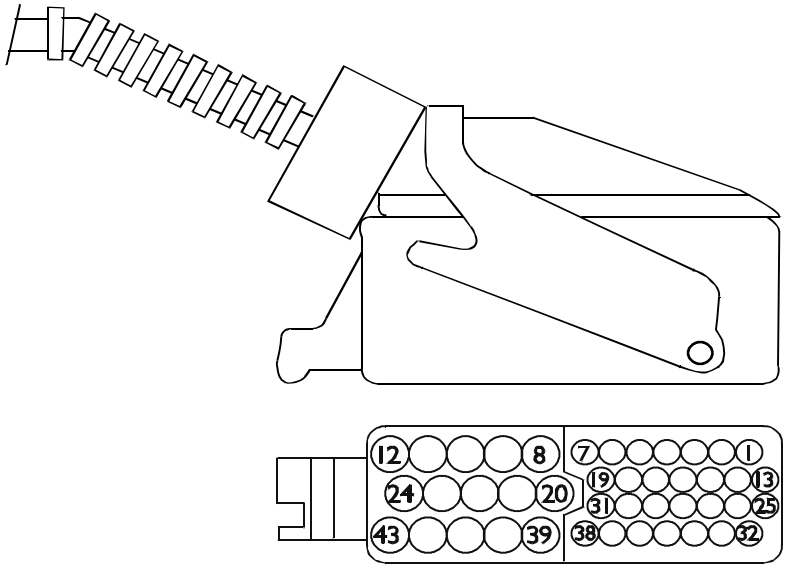

7422

IV.98 VIEW OF BOSCH 43-WAY CONNECTOR FROM CABLE INPUT SIDE

Pin	Function	Cable colour code
1	To cruise Control	8156
2	To load sensor on accelerator for EDC	5157
3	Spare	—
4	To instrument panel module A1 rpm indicator repeater	5155
5	Spare	—
6	Compressor engaged signal to EDC	8162
7	To diagnostic socket	2299
8	To alarm control unit	Green
9	EDC control unit supply	8150
10	EDC control unit supply	8150
11	Control to relay for connection with fuel tank for thermal starter (not for F1A)	0000
12	To earth signal (battery negative)	0000
13	To load sensor on accelerator for EDC	5156
14	Instrument panel module A20 rpm indicator repeater mass	0000
15	Spare	—
16	To instrument panel module A17 rpm signal	5614
17	Spare	—
18	Spare	—
19	To diagnostic socket	1199
20	To key-operated fuse 2	8051
21	To instrument panel module AI A30 engine preheat warning leds	0000
22	EDC control unit supply	8150
23	To instrument panel module AI EDC A29 defect warning leds	5156
24	To earth signal (battery negative)	0000
25	To Cruise Control	8155
26	Supply with stop lights on	8153
27	To load sensor on accelerator for EDC	0150
28	To diagnostic socket	9932
29	To load sensor on accelerator for EDC	0159
30	Spare	—
31	Supply when brake pedal is pressed	8158
32	To cruise Control	8154
33	To cruise Control	8157
34	Spare	—
35	To load sensor on accelerator for EDC	5158
36	Spare	—
37	F1A preheat centre control	1310
38	To clutch pressed signal relay for EDC	0160
39	To alarm control unit	White
40	Control to relay for EDC engagement	8150
41	EDC control unit supply	8150
42	Heater starter insertion remote control switch control/F1A preheat centre control	0000 / 1311
43	To earth signal (battery negative)	0000

EDC system components

Ref.	Component code	Description
1	58918	Instrument panel tachometer
2	58918	Instrument panel rev counter
3	42374	Clutch pedal switch
4	53565	Brake pedal switch
5	85152	Idling switch and accelerator pedal position sensor
6	47106	Fuel temperature sensor (F1A engine)
7	47106	Fuel temperature sensor Fuel filter clogging sensor (8140 engine)
8	85157	Fuel pressure sensor (F1A engine)
9	85157	Fuel pressure sensor (8140 engine)
10	47035	Coolant temperature sensor
11	85156	Air delivery sensor
12	48042	Distribution sensor
13	48035	Crankshaft sensor (F1A engine)
14	48035	Flywheel sensor (8140 engine)
15	78247	Electro injectors
16	19005 78000	Hot starter Hot starter electro valve (8140 engine)
17	25231	Plug preheat centre (F1A engine)
18	19010	Preheat plug (F1A engine)
19	85151	Fuel electro pump
20	78015	3rd pump cutout electro valve (8140 engine)
21	78013	Pressure regulator (8140 engine)
22	78013	Pressure regulator (8140 engine)
23	12012	AC compressor
24	78209	EGR modulating electro valve
25	85159	Air delivery sensor
26	58701	EDC warning light
27	58702	Preheat warning light
28	54032	Cruise Control/PTO controls
29	85130	Start key with Immobilizer
30	72027	Diagnosis connection
31	78248	VGT control electro valve (for 8140.43N engine)
32	85022	Fan electromagnetic connection
(*)	On version without EGR	
(**)	On version with EGR	
■	Only on 8140 engines	
●	Only on F1A engines	

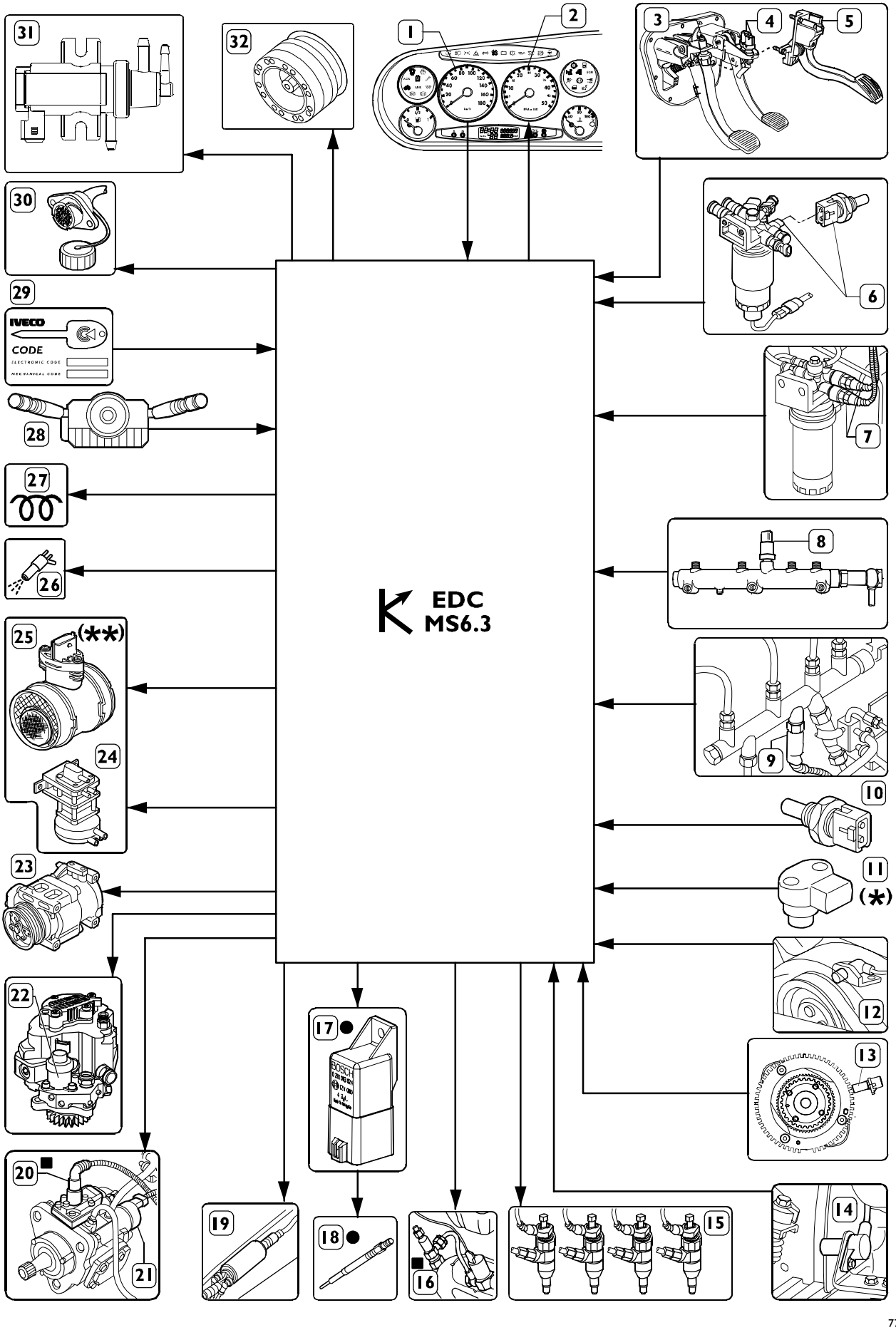
1
2
3
4
5
6
7
8
9
10
11
(*)
12
13
14
15
16
17
18
19
20
21
22
23
24
25
(**)
26
27
28
29
IVECO
CODE
ELECTRONIC CODE
MECHANICAL CODE
30
31
32
EDC
MS6.3
77024

Blink Code (up to chassis no. 5383302/D187233)

With the ignition switch off, press the diagnostic button.

Two series of blinks of the EDC warning light, at intervals with a brief pause, will indicate the code of the first error memorised.

Press the button again to move to the next error.

Each time the last error is reached, the first one will be repeated.

The list of the errors contains all the errors memorised and not only the active ones.

The order in which the errors are shown is the one in which they occurred.

To remove the error list from the memory, proceed as follows:

- With the ignition key off, press the diagnostic button
- keeping the button pressed, switch the ignition on
- keep the button pressed for 5 seconds
- release the button
- Switch the ignition off.

The error codes are given in the following table.

Common Rail 8140.43B - 8140.43S - 8140.43N - EDC MS6.3
(Software version 5.5)

Blink-Code	Warning light EDC	Warning light	Reduction level (*)
VEHICLE			
1.1	on	Vehicle speed	
1.3	off	Cruise Control	
1.4	flashing	Accelerator pedal	X
1.5	off	Clutch switch	
1.6	on	Brake switch	
1.7	off	Brake/accelerator plausibility	Idling setting
1.8	off	Diagnostic warning light / Main EDC warning	
1.9	off	Conditioner control relay	
ENGINE 1			
2.1	flashing	H_2O temperature sensor	X
2.2	off	Air temperature sensor	
2.3	on	Fuel oil temperature sensor	
2.4	flashing	Boosting pressure sensor	X
2.5	off	Atmospheric pressure sensor	
2.7	flashing	Fuel pump	
2.8	off	Fuel filter heater control relay	
2.9	on	Fan control relay	
ENGINE 2			
3.1	flashing	Cylinder 1 balancing	
3.2	flashing	Cylinder 2 balancing	
3.3	flashing	Cylinder 3 balancing	
3.4	flashing	Cylinder 4 balancing	
3.5	off	Battery voltage	
3.6	off	Thermal starter warning light	
3.7	off	Thermal starter	
3.8	off	Thermal starter solenod valve	
3.9	off	Preheat monitoring	
TURBINE			
4.4	flashing	VGT monitoring	
4.5	on	VGT electro valve	

Blink-Code	Warning light EDC	Warning light	Reduction level (*)
INJECTORS			
5.1	flashing	Cylinder injector 1	
5.2	flashing	Cylinder injector 2	
5.3	flashing	Cylinder injector 3	
5.4	flashing	Cylinder injector 4	
5.7	on	Bearing 1 (cylinders 1-4)	
5.8	on	Bearing 2 (cylinders 2-3)	
ENGINE RPM			
6.1	flashing	Engine rpm sensor	X
6.2	flashing	Camshaft revolution sensor	X
6.4	flashing	Over-revving	
INTERFACE			
7.1	off	PWM signal	
7.2	off	CAN bus inactive	
7.3	off	CAN bus control	
7.4	off	CAN message control	
FUEL PRESSURE/EGR			
8.1	flashing	Fuel pressure control	X or Engine cutout
8.2	flashing	Fuel pressure sensor	X
8.3	flashing	Pressure regulator	
8.4	off	3rd impeller cut-off solenoid valve	
8.5	on	EGR control	
8.6	on	EGR valve	
8.7	on	Debit meter	X
8.8	off	EGR atmospheric pressure sensor	
CENTER			
9.1	flashing	Control unit error	X or Engine cutout
9.2	on	Control unit EEPROM fault	
9.3	flashing	Immobiliser - EDC communication	
9.4	on	Main relay	
9.5	off	After run Test	
9.6	flashing	Engine stop test (ECU) Engine stop test (ECU)	
9.7	flashing	Sensor supply	X or Engine cutout
9.8	flashing	Control unit error	Start impossible
9.9	flashing	ECU operating system	Engine cutout

F1A Common Rail

Differs for the following codes:

3.6	off	Preheat warning light	
3.7	off	Preheat plug centre	
3.8	off	Preheat plug centre	
3.9	off	Preheat monitoring	
8.4	off	(Not used)	

EDC16

The EDC.16 control unit offers a few innovations compared to the control unit used with system EDC MS6.3.

- latest-generation hardware and software;
- possibility of processing a greater number of signals (both input and output);
- preset for the control of new additional functions and devices, which will be adopted later for technological improvement of the product range or compliance with forthcoming anti-pollution rules.

The variants compared with the MS6.3 system are as follows:

- new sensor on the accelerator pedal;
- new sensor on the distributing shaft (phase);
- engine cable;
- bonnet/cab cable;
- new connectors for control unit connection.

The EDC.16 system replaces the MS6.3 system on engines F1A (.10 - .12).

Diagnosis is only performed by using the diagnostic instruments available. No Blink Code is provided.

The other features are the same as the 6.3 system.

BOSCH EDC16 CONTROL UNIT

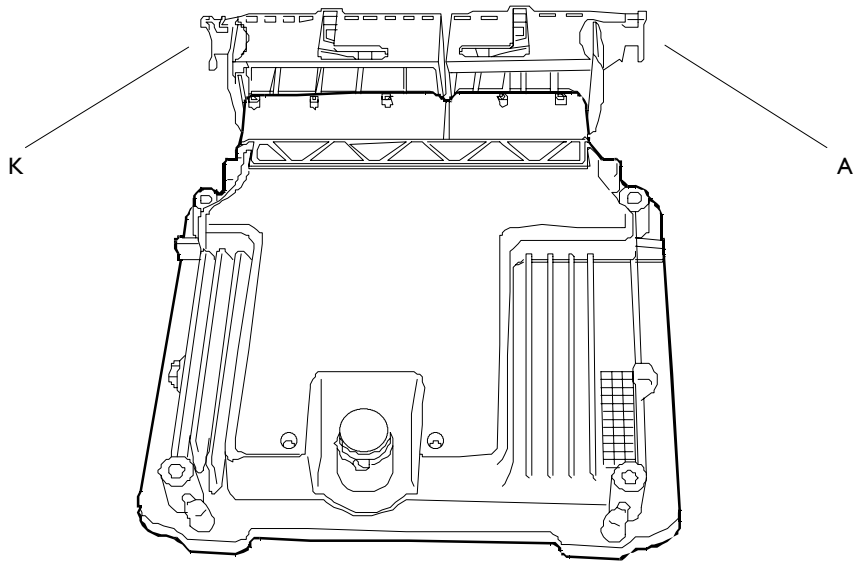

85711

PERSPECTIVE VIEW
A. ENGINE SIDE INJECTION CABLE CONNECTOR – **K.** BONNET/CAB CABLE CONNECTOR

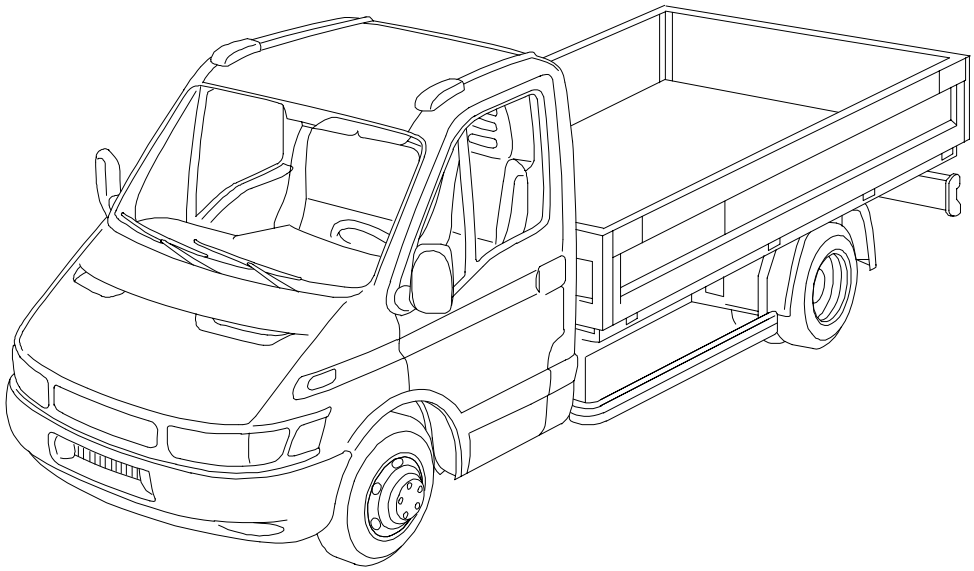

7373

LOCATION ON THE VEHICLE

Control unit connection to the injection cable on engine side (housing A)

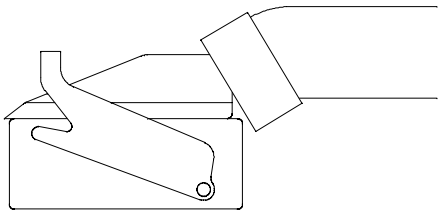

85708

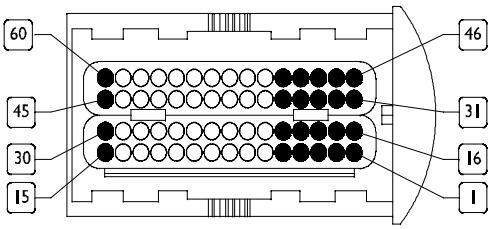

85710

Pin	Cable colour code	Function
1	0000	Cylinder injector 3
2	0000	Cylinder injector 2
8	0000	Rail pressure sensor negative
11	0174	Distributing shaft sensor negative (phase)
12	red	Drive shaft sensor
13	5153*	Boosting air pressure and temperature sensor power supply
16	9924	Cylinder injector 1
17	9924	Cylinder injector 4
19	0000	Pressure regulator negative
20	7158	Distributing shaft sensor positive
21	–	Drive shaft sensor braided wire
23	0165*	Boosting air pressure and temperature sensor negative
27	white	Drive shaft sensor
28	5591	Rail sensor power supply
29	8152	Air flow meter power supply (available with EGR)
31	9924	Cylinder injector 2
33	0000	Cylinder injector 4
37	5151	Air flow meter air temperature signal (available with EGR)
40	5152*	Boosting air pressure sensor signal
41	0150	Water temperature sensor negative
42	8153	Air flow meter signal
43	5591	Rail pressure signal
44	8151	Air flow meter negative (available with EGR)
46	9924	Cylinder injector 3
47	0000	Cylinder injector 1
49	9925	Pressure regulator
50	9160	Distributing shaft sensor signal (phase)
51	0150	Fuel temperature sensor negative

Pin	Cable colour code	Function
52	**5592**	Fuel temperature sensor signal
53	**5151***	Boosting air temperature sensor signal
58	**5154**	Water temperature sensor signal
60	**8150**	EGR solenoid valve
●	Power seats	
○	Signal seats	
(*)	Available when the EGR is not provided	
-	Pins not highlighted are not used	

Control unit connection to cab-bonnet cable (housing K)

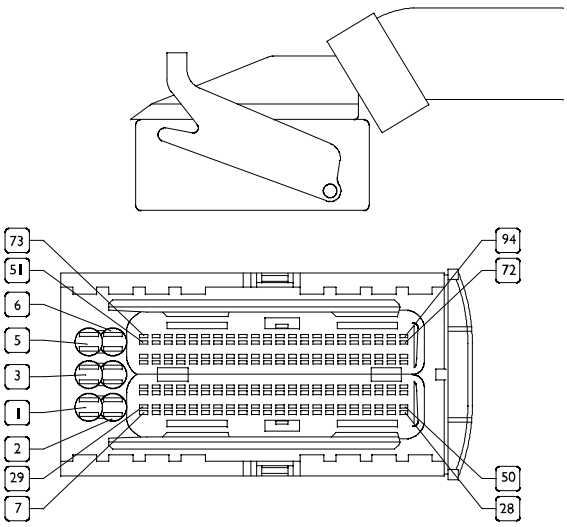

85708

85709

Pin	Cable colour code	Function
1	-	+30 (main relay)
2	0000	Earth
4	0000	Earth
5	8150	+30 (main relay)
6	0000	Earth
8	0150	Accelerator pedal sensor negative (pin 5)
9	5157	Accelerator pedal sensor signal (pin 4)
13	-	Signal from power takeoff (if any) state selector
16	-	Negative from power takeoff (if any) state selector
17	-	Signal from brake pedal pressed for stop light ignition
25	2299	K line
28	8051	+15
30	0159	Accelerator pedal sensor negative (pin 3)
31	5157	Accelerator pedal sensor signal (pin 6)
38	8155	Cruise Control (resume)
42	-	Speed limiter button
45	5158	Accelerator pedal sensor power supply (pin 2)
46	5158	Accelerator pedal sensor power supply (pin 1)
48	5614	Engine speed sensor (revs counter)
52	1310	To preheating spark plug actuation remote-control switch pin D1
54	8162	Signal from air-conditioning ON compressor remote-control switch
56	8157	Cruise Control (set +)
57	-	Auxiliary speed limiter (where available)
58	-	Signal from clutch switch
61	-	CAN L line
62	-	CAN H line
68	8150	Fuel filter heating remote-control switch positive

Pin	Cable colour code	Function
70	9990	Positive to the remote-control switch for engine water recirculation shut-off solenoid valve control with auxiliary heater ON
71	5156	EDC warning light negative
72	8150	Main relay (negative)
75	5155	Vehicle speed signal (tachometer)
77	8154	Cruise Control (off)
78	8156	Cruise Control (set -)
80	8158	Brake pedal signal
90	7740	Positive for engine cooling electromagnetic joint control
91	-	Fuel electric pump remote-control switch negative
92	0000	Pre-heating warning light negative
93	1311	To pre-heating spark plug actuation remote-control switch pin ST
-	Pins not highlighted are not used	

ACCELERATOR PEDAL SENSOR

A new sensor which incorporates two potentiometers (no idling switch is provided) is available on the accelerator pedal. The ratio between the signals from the two potentiometers is 2:1 (one potentiometer exhibits a twofold resistance value compared with the other). Both of these signals (V) are detected by the control unit that processes them according to stored threshold values and manages the injection system as an accelerator pedal position set by the driver. (At the output of these potentiometers, a variable voltage is available which corresponds to the potentiometer resistance value.)

It is connected to the EDC control unit connector K pins 9-30-45-31-8-46. The potentiometers are powered with 5 V voltage supplied by the control unit itself.

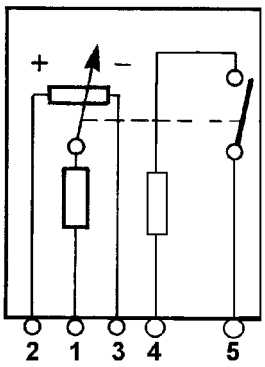

EDC MS6.3

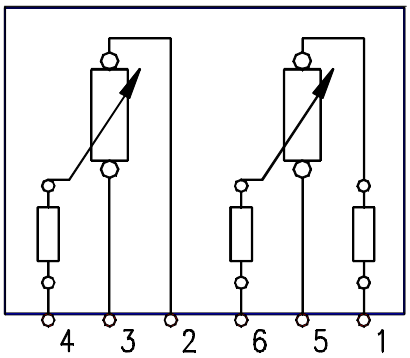

EDC 16

85714

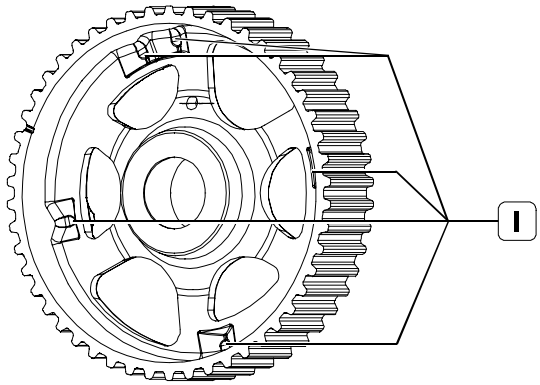

0003320t

1. PHASE IDENTIFICATION HOLES

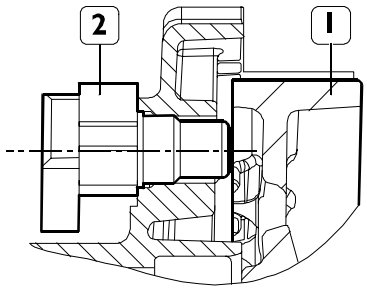

000332 1t

1. DISTRIBUTING SHAFT PULLEY – 2. SENSOR

SENSOR ON DISTRIBUTING SHAFT

Operation logic

A semiconductor layer, immersed in a magnetic field and through which current flows, generates a potential difference (called Hall voltage) at its ends.

If current intensity remains constant, the generated voltage depends only on the magnetic field strength: periodical variation of field strength is enough to obtain a modulated electric signal.

The smooth portion of the phonic wheel (distributing shaft pulley) covers, while moving, the sensor, thus blocking the magnetic field with resulting low output signal.

On the contrary, the sensor generates a high signal next to the openings and when a magnetic field is available.

Phase sensor signals are acquired, and the engine position is recognized according to the sequence of the phonic wheel notches.

The mounting function makes it possible to identify signal errors and interferences (if any).

The resulting signal is supplied to the processor that controls the injection system.

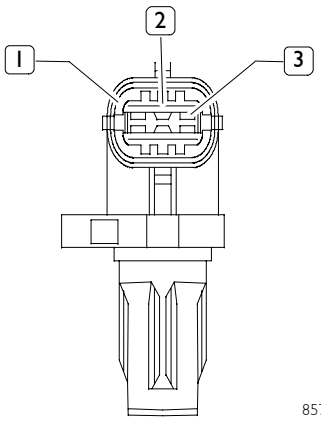

85712

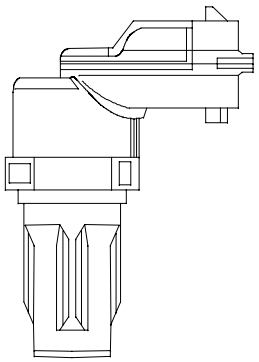

85713

PERSPECTIVE VIEW
1. POWER SUPPLY POSITIVE – 2. SIGNAL OUTPUT – 3. EARTH

INJECTION CABLE – F1A .10, .12 (WITH/WITHOUT THE EGR)

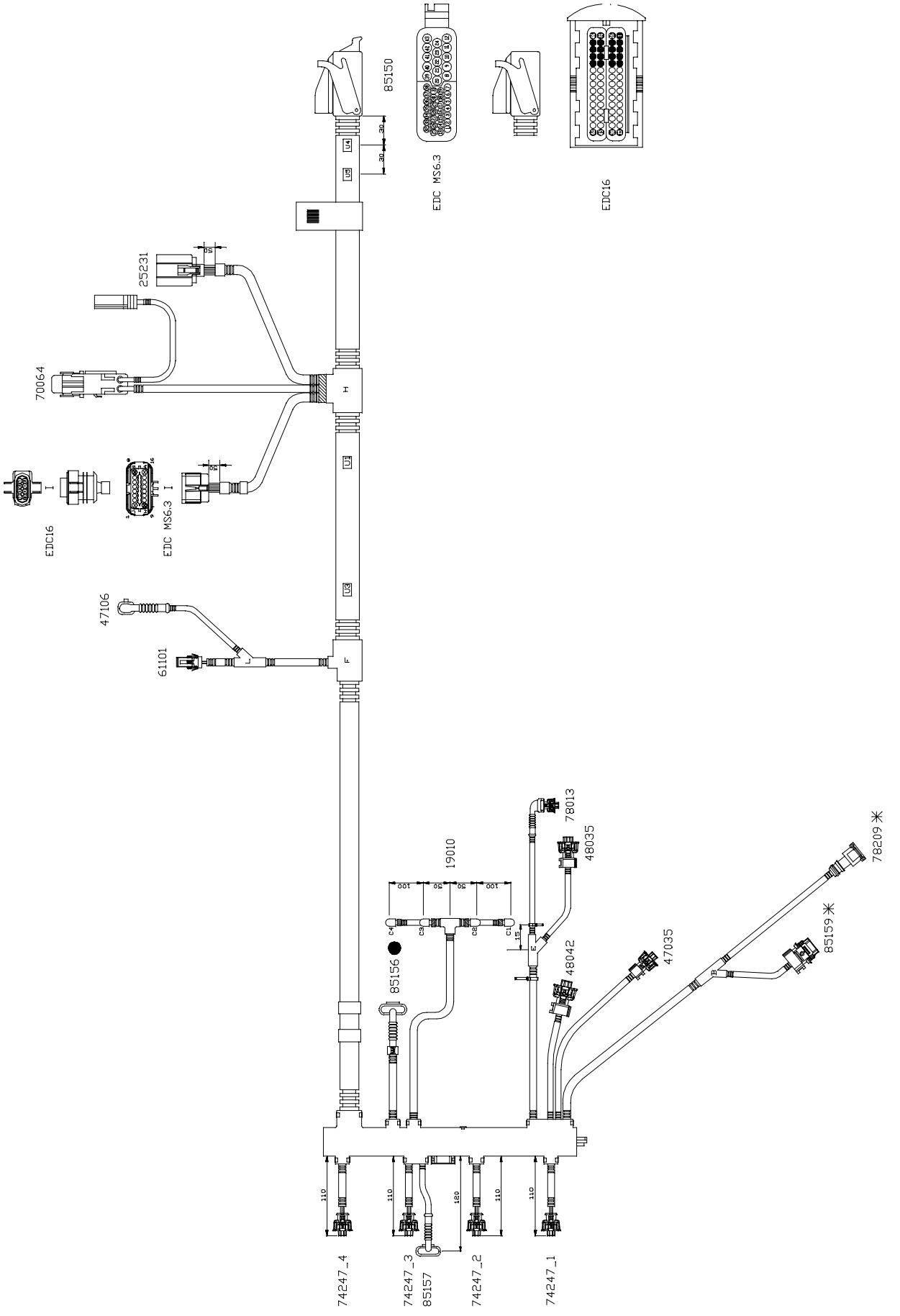

Connectors between cables

Connection between cab/bonnet cable and injection cable (Unijet)

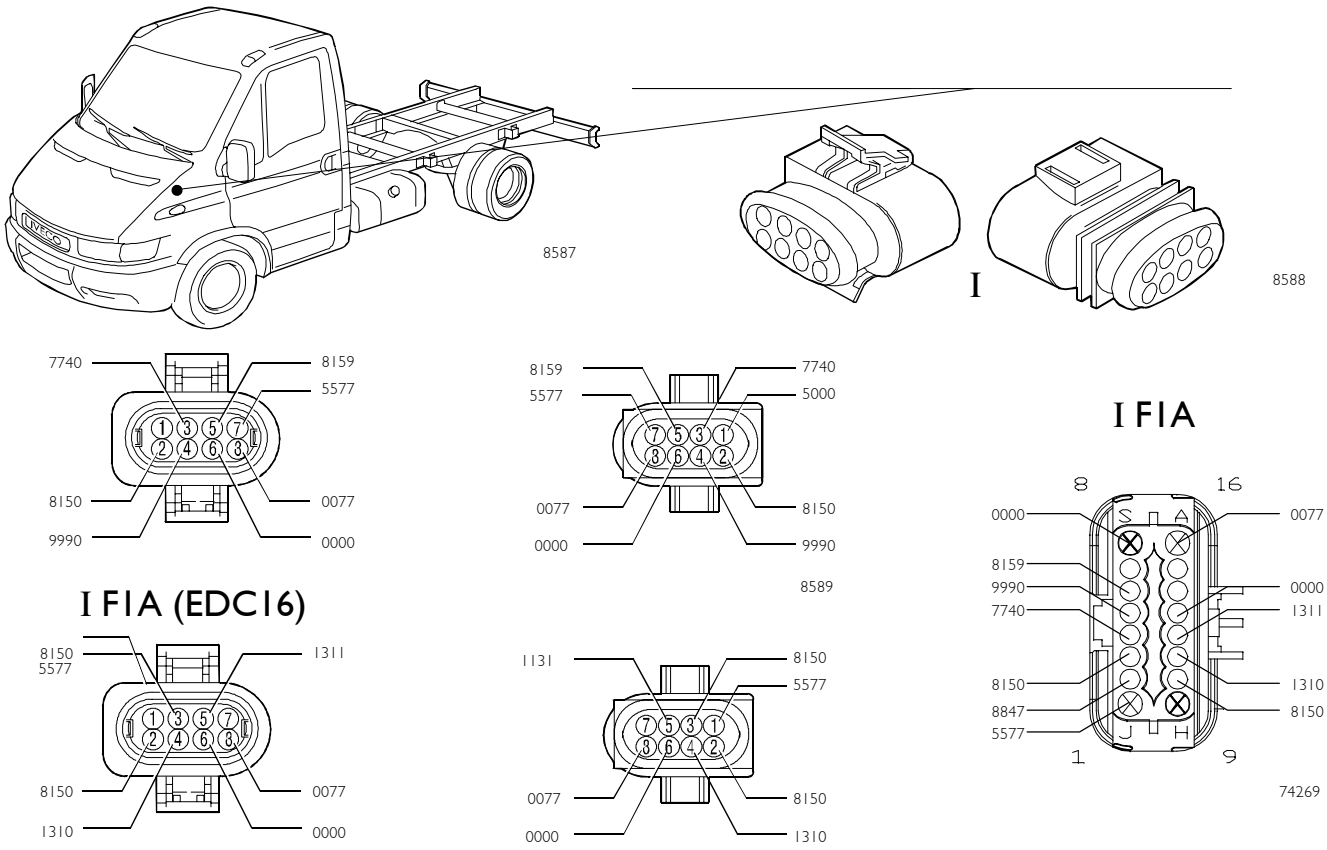

Ref.	Ref. (F1A)	Ref. (F1A EDC16)	Cable colour code	Function
1			5000	To pin 36 of EDC electronic control unit
2	3		8150	Fuel pump engagement relay
3	4		7740	Relay engagement for engine cooling electromagnetic joint control
4	5		9990	Air conditioning compressor switching off
I 5	6		8159	Fuel oil heating circuit switching on
6	8		0000	Earth
7	1	1	5577	Fuel oil heating resistance supply
8	16	8	0077	Fuel oil heating resistance earth
	10	2	8150	Preheat plug centre positive (pin-86)
	11	4	1310	Preheat plug centre control (pin-D1), (EDC pin-B37)
	12	5	1311	Preheat plug centre control (pin-ST), (EDC pin-B42)
	13	6	0000	Preheat plug centre mass (pin-31)
	2		8847	Speed adjustment sensor positive
	7		-	Free
	9		-	Free
	14		-	Free
	15		-	Free
		3	8150	Positive after key for air flow meter

DIAGNOSTIC CONNECTOR

Near the positive terminal of the battery there is a diagnostic connector. It is fastened by 2 screws to a special bracket fitted on the body and access to it is gained by unscrewing the protective cap; suitably connected to the diagnostic system (IWT, MODUS), it allows quick identification of the cause of faults in the various electronic devices.

The table on the following page shows the correspondence between the various electronic systems and the connector pins referring to them.

NB The connector shown is seen from the pin side.

The diagnosis connector on F1A engine vehicles is located on the conveyor unit lower party on the passenger side.

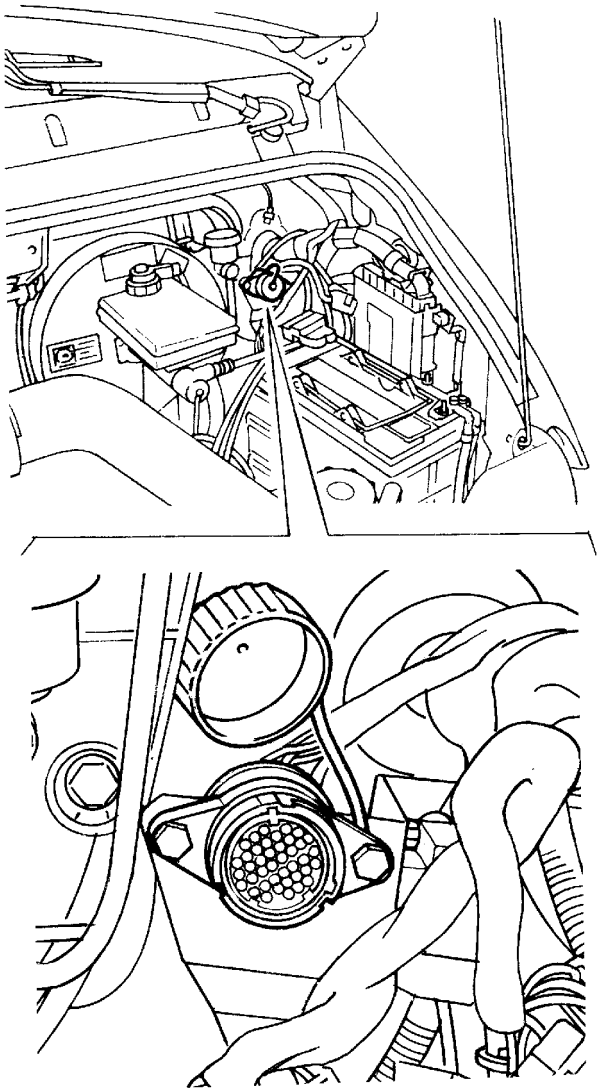

8620

38-PIN DIAGNOSTIC CONNECTOR

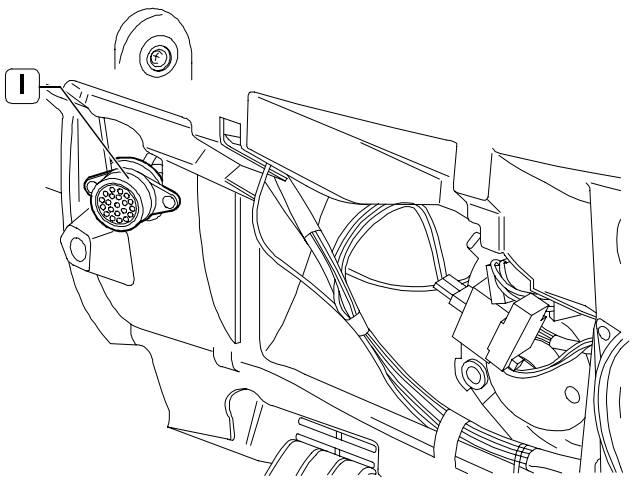

38-POLE DIAGNOSIS TAKEOFF

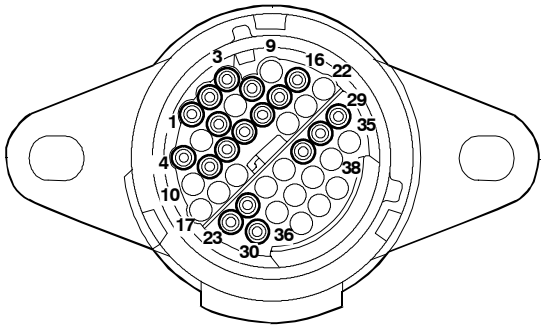

8621

DENTIFICATION OF THE PINS OF THE 38-PIN DIAGNOSTIC CONNECTOR

Diagnostic connector pin description table

System	Pin	Function
EDC/EGR/Methane	1* 2	L K
ABS/EBD/ABD	3 4	L K
Air Bag/Retarder	6	K
Tachometer (connector A cell 2 instrument cluster)	8	K
Supply +15/A services	11	Input
Immobilizer/Central door locking/Alarm	12	K
Climate control system	13 14	L K
Self-levelling suspension	15 16	L K
Engine timing signal (connector B pin 28 EDC control unit) Engine timing earth (battery -)	23* 24	- Screening
Supply +30	27	Battery +V
Engine rpm	28	RPM
Vehicle speed	29	-
Earth	30	-

(*) In vehicles equipped with F1A engine and EDC 16 electronic control unit, diagnosis connector pins 1 and 23 are free.

High-pressure pump (F1A engine)

This pump is similar to the 8140 engine one.

It differs in Rail line pressure, modulated at between 250 and 1600 bars by the electronic centre by acting on the pressure regulator electro valve and is not provided with a 3rd pump cutout electro valve (78015).

Pump (3) is oriented on the pump shaft cam.

During aspiration the pump is powered via supply conduit (5).

The amount of fuel to be sent to the pump is set by pressure regulator (7).

The pressure regulator stops fuel inflow to the pump based on PWM input from the centre.

During pump compression, fuel reaches a pressure level sufficient to open the pressure valve to common rail (2), and supplies it via output (1).

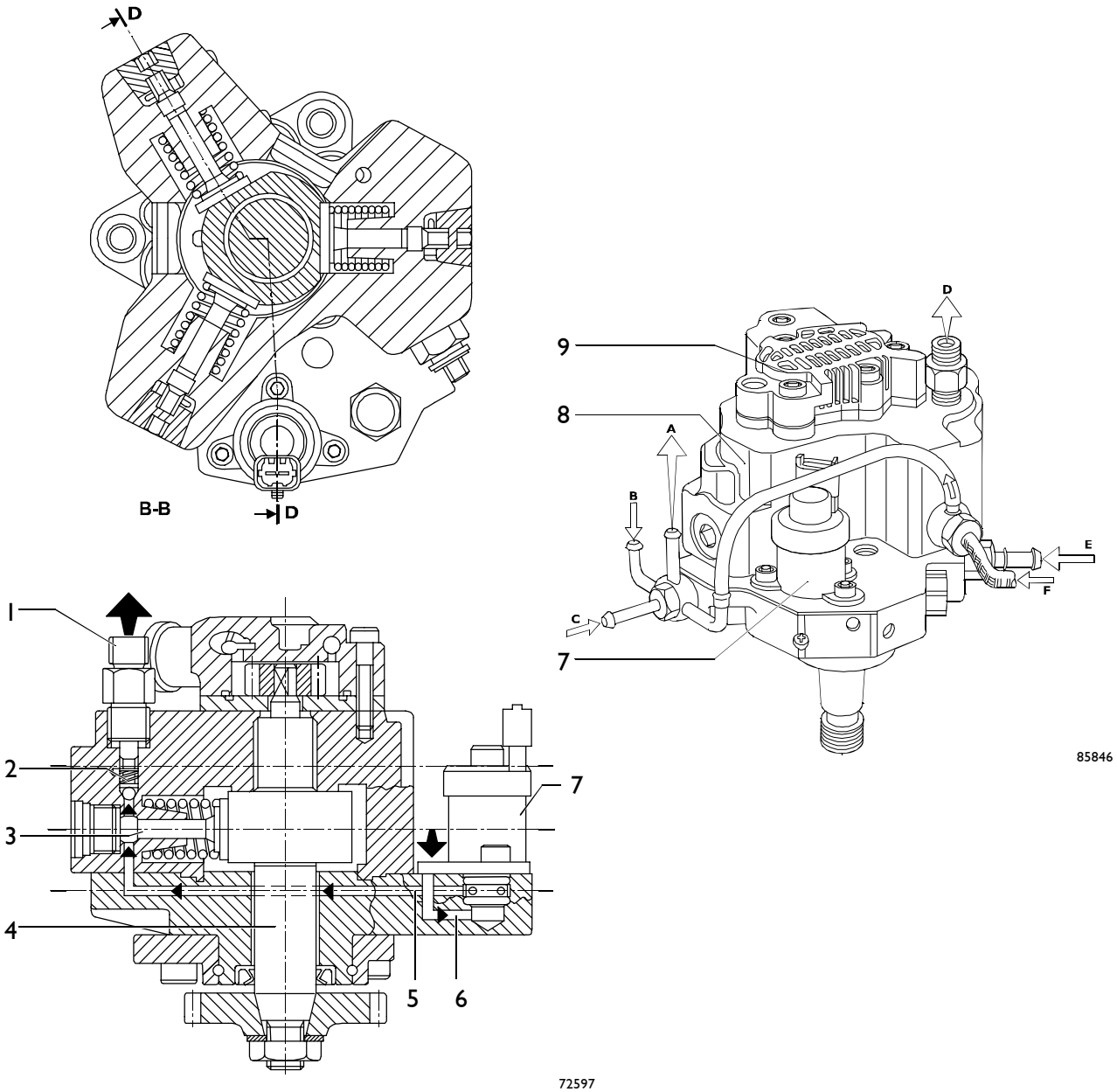

1. RAIL DELIVERY OUTPUT – **2.** RAIL DELIVERY VALVE – **3.** PLUNGER – **4.** PUMP SHAFT – **5.** PLUNGER SUPPLY DUCT – **6.** PRESSURE REGULATOR SUPPLY DUCT – **7.** PRESSURE REGULATOR – **8.** HIGH-PRESSURE PUMP – **9.** MECHANIC FEED PUMP – **A.** TO THE TANK – **B.** RETURN FROM HYDRAULIC ACCUMULATOR (RAIL) – **C.** FUEL FILTER RETURN – **D.** DELIVERY TO HYDRAULIC ACCUMULATOR (RAIL) – **E.** FROM THE TANK – **F.** RETURN FROM INJECTORS.

CLIMATE CONTROL

General

The function of the system is to automatically or manually control the temperature required in the cab.

According to the set required temperature the system controls:

- automatically:
  air vent temperature
  fan speed (continuous changing)
- manually:
  fan speed
  compressor on/off
  outside air inlet/re-circulation
  MAX DEF function (defrosting);
- totally manually (through bowden cables):
  distribution of air flows to the air vents.

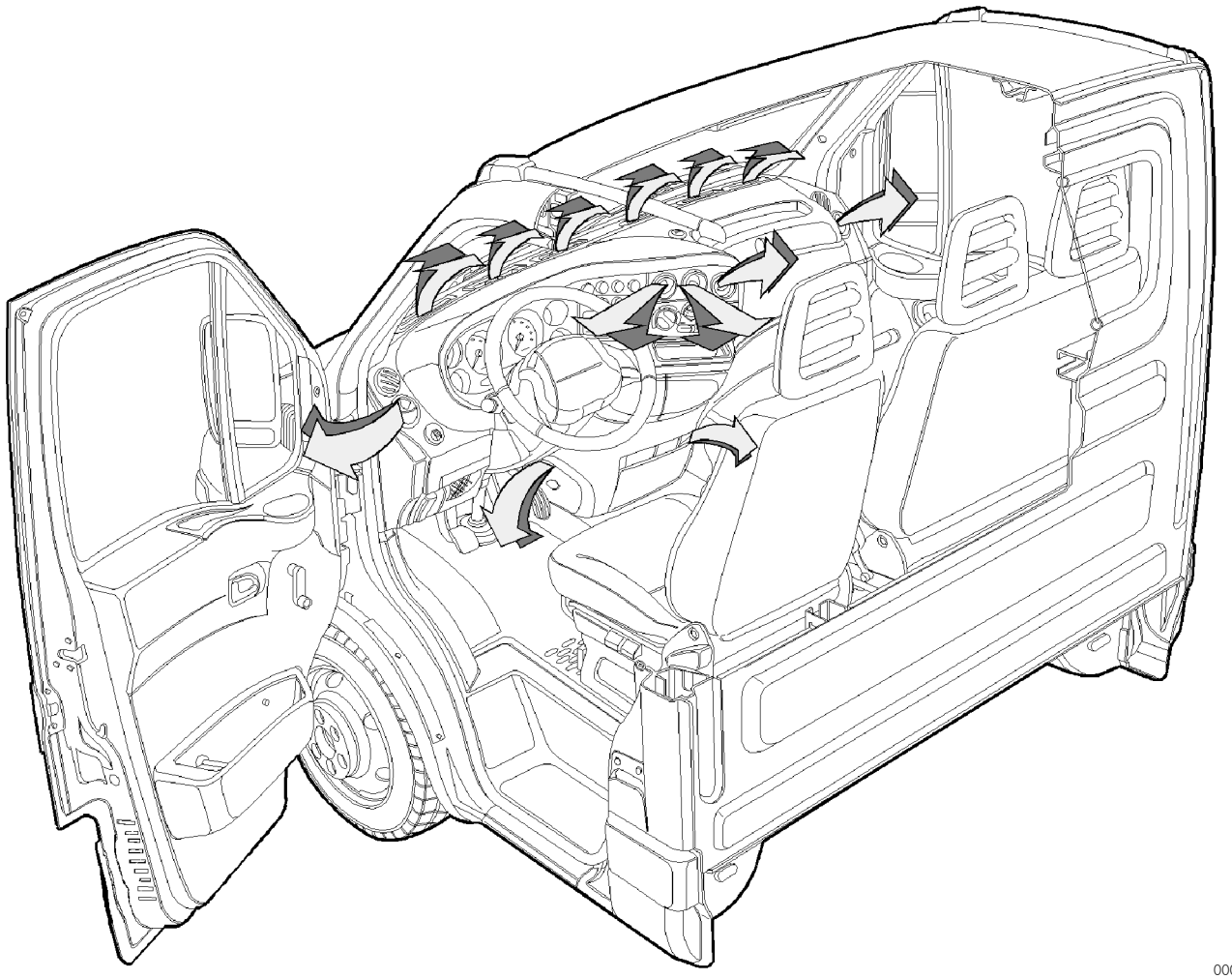

000250t

IV.99 AIR FLOW DISTRIBUTION INSIDE THE CAB

Operating logic

A special electronic control unit controls automatic system operation checking the various parameters in order to provide the comfort required in the cab.

The control unit carries out and sets certain functions to obtain adaptation of the temperature of the cab to the one required depending on the requests received and the temperature conditions detected.

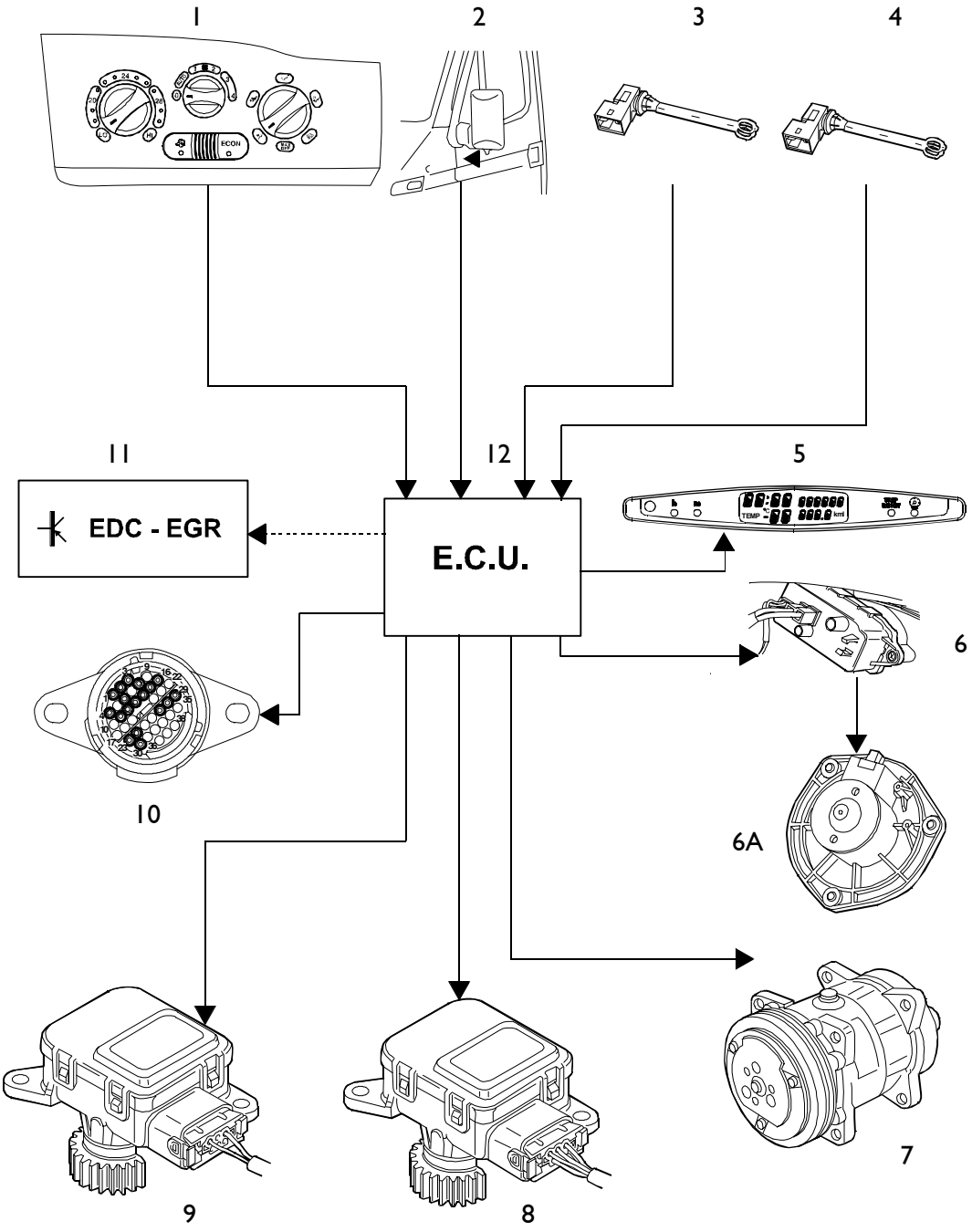

IV.100 CLIMATE CONTROL ELECTRONIC CONTROL UNIT CONNECTIONS 00025 I t

1. CONTROLS ON DASHBOARD: INSIDE TEMPERATURE SENSOR, RE-CIRCULATION SWITCH, "ECO" SWITCH, FAN CONTROL POTENTIOMETER **- 2.** OUTSIDE TEMPERATURE SENSOR **- 3.** EVAPORATOR SENSOR **- 4.** BLOWN AIR SENSOR **- 5.** DIGITAL DISPLAY **- 6.** FAN ELECTRONIC CONTROL MODULE **- 6A.** FAN **- 7.** COMPRESSOR **- 8.** GEAR MOTOR FOR RE-CIRCULATION FUNCTION **- 9.** AIR MIXING GEAR MOTOR **- 10.** DIAGNOSTIC CONNECTOR **- 11.** EDC-EGR CONTROL UNIT - **12.** CLIMATE CONTROL ELECTRONIC CONTROL UNIT

Air distribution knob

A. Face area vents
B. Face and floor area vents
C. Floor area vents
D. Floor and windscreen area vents
E. Windscreen area vents

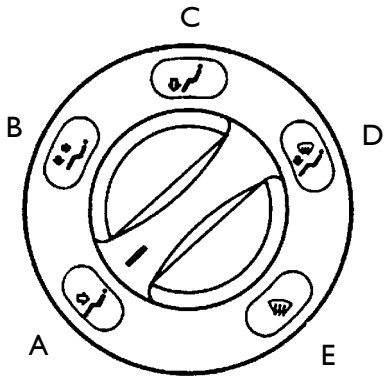

000252t

IV.101 DETAIL OF AIR DISTRIBUTION KNOB

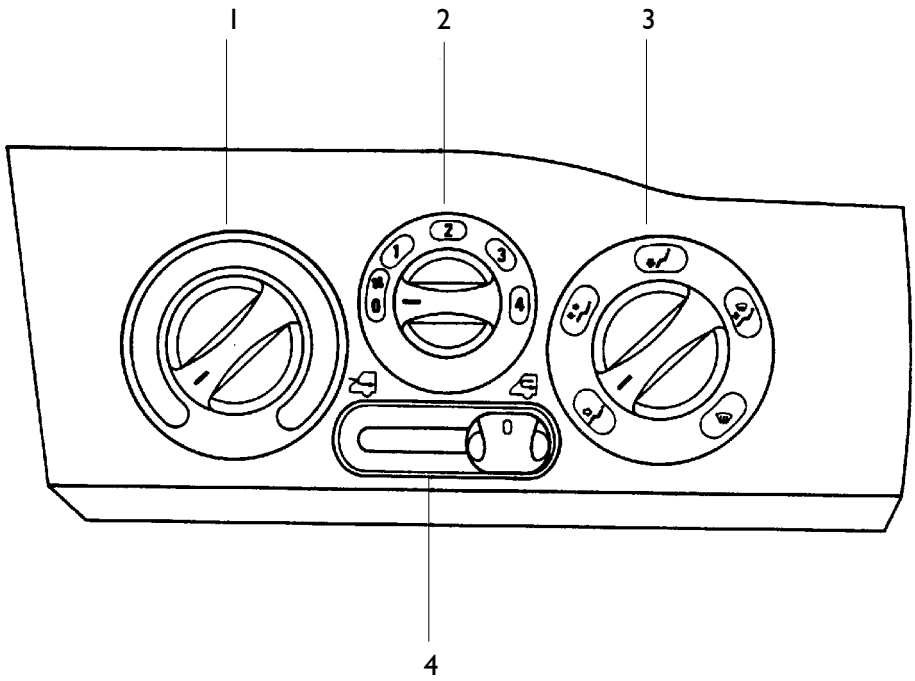

000241t

IV.102 VENTILATION AND HEATING CONTROLS ASSEMBLY
1. TEMPERATURE ADJUSTMENT KNOB - **2.** FAN SPEED CONTROL KNOB - **3.** AIR DISTRIBUTION KNOB - **4.** OUTSIDE AIR INLET OR RE-CIRCULATION

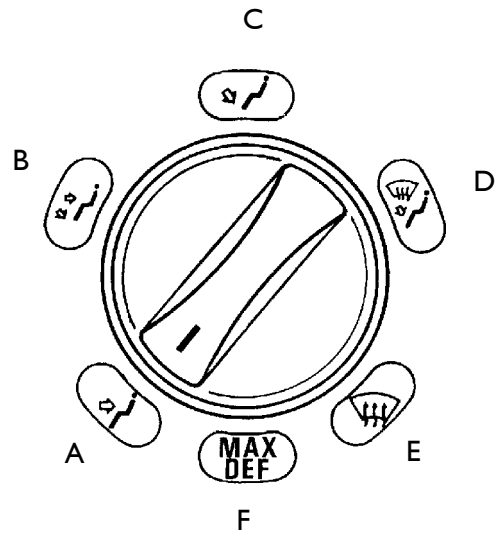

IV.103 DETAIL OF AIR DISTRIBUTION KNOB

Air distribution knob with climate control system

- **A.** Face area vents
- **B.** Face and floor area vents
- **C.** Floor area vents
- **D.** Floor and windscreen area vents
- **E.** Windscreen area vents
- **F.** "Max def" function

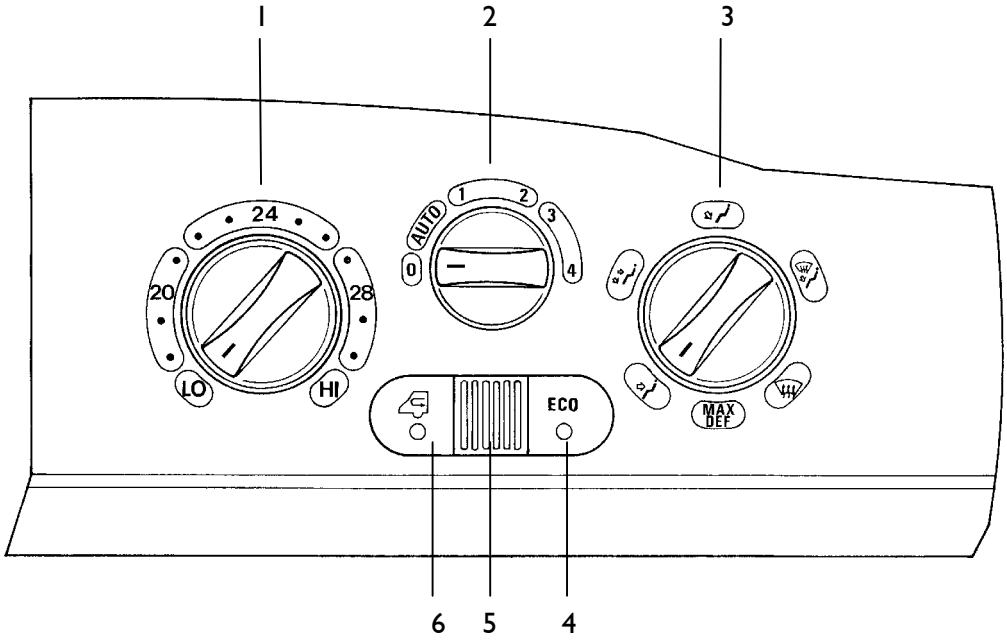

IV.104 CLIMATE CONTROL SYSTEM CONTROLS ASSEMBLY
1. KNOB FOR SETTING REQUIRED TEMPERATURE - **2.** FAN SPEED CONTROL KNOB - **3.** AIR DISTRIBUTION KNOB - **4.** "ECO" FUNCTION SWITCH - **5.** INSIDE TEMPERATURE SENSOR - **6.** RE-CIRCULATION KNOB

Setting the required temperature

To set the required temperature, turn the corresponding knob (Fig. IV.105) to the 18 °C - 30 °C range.

This knob is connected to a potentiometer which detects the different angular positions and transmits a signal to the electronic control unit.

There are fifteen different positions (one per degree centigrade) with two extremes "LO" and "HI" which correspond respectively to the coldest and warmest positions.

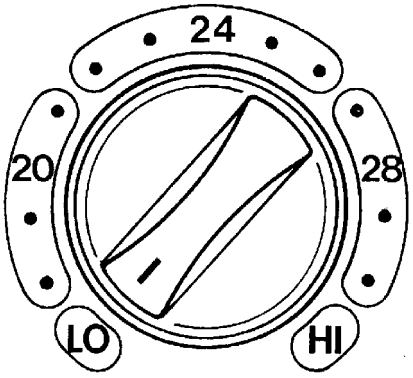

000255t

IV.105 KNOB FOR SETTING REQUIRED TEMPERATURE

Setting the fan speed

To set the required fan speed, turn the corresponding knob (Fig. IV.106) to the 0 to 4 range.

This knob is connected to a potentiometer which detects the different angular positions and transmits a signal to the electronic control unit.

There are six different positions, four of which are set manually (1, 2, 3, and 4), one for no air flow (0) and an automatic one controlled by the electronic control unit where the system itself selects the most suitable air flow to reach and/or maintain the required temperature (AUTO).

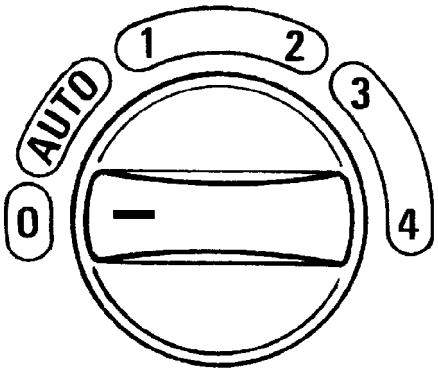

000256t

IV.106 KNOB FOR SETTING FAN SPEED

"Auto" function

With the ventilation control knob in the "AUTO" position, the control unit will be able to control:

- The air temperature at the vents.
- Fan speed.

Function "0" (OFF)

With the ventilation control knob in the "0" position, the control unit acts as follows:

- No air flow (fan off).
- Mixing stopped in the previous position.
- Re-circulation on.
- Compressor off.
- "MAX DEF" function cut off if in progress.

"ECO" function

The engagement of this function is completely manual and is obtained through the special switch which makes it possible to disengage the compressor electromagnetic clutch.

Compressor control is however linked to other parameters, namely:

- Outside temperature (> 5 °C "ON")
- Evaporator temperature (> 4 °C "ON", < 3.5 °C "OFF")
- Coolant fluid system pressure (min. 3.5 bar, max. 28 bar)
- EDC or EGR control unit (in versions where applicable).

"Re-circulation" function

The engagement of this function is completely manual and is obtained through the special switch which makes it possible to shut off the outside air inlet.

In the "MAX DEF" mode this function is cut off regardless of the position of the switch.

"MAX DEF" function

The engagement of this function is completely manual and is obtained turning the air distribution clockwise as far as the "MAX DEF" position.

The control unit will be informed of this request by the closing of a special N.O. microswitch in the rear part of the knob.

The engagement of this function involves:

- Maximum air flow, regardless of the position of the knob.
- Air distribution towards the windscreen through bowden cables.
- Mixing with the highest heat available (memorising the last position of the motor before leaving the adjustment state).
- Outside air inlet, regardless of the position of the re-circulation button.
- Compressor on, regardless of the position of the ECO button.

Switching this function off the gear motor moves back to the position memorised previously if the temperature adjustment knob is not at "LO" or "HI".

If this function is already selected when the ignition key is turned on, no position will be memorised, and switching it off, the adjustment procedure will be started with the mixing gear motor in the "HI" condition.

SYSTEM COMPONENTS

Electronic control unit

This automatically controls the system monitoring the thermodynamic parameters in order to provide the suitable climate (temperature and humidity) required by the driver.
It is located on the lower part of the passenger's side duct unit.

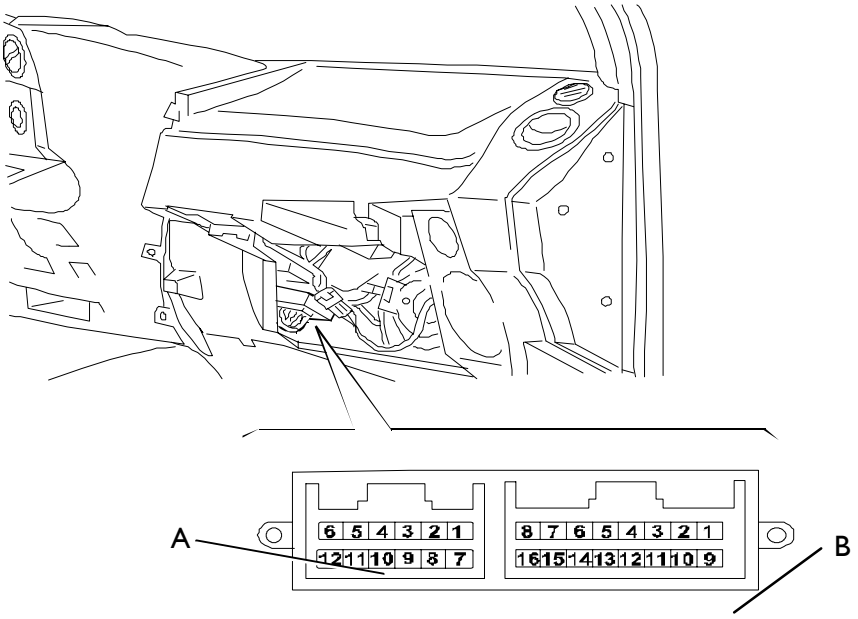

000257t

Connector	Pin	Function
A	1	Signal from treated air temperature sensor
	2	Signal from required temperature potentiometer
	3	Signal from ventilation control potentiometer
	4	Earth
	5	Positive from "ECO" switch
	6	Positive from microswitch for "MAX DEF" function
	7	Signal earth
	8	Supply (+15/A)
	9	5 V supply for ventilation, temperature and air mixing potentiometers
	10	Line L for 38-pin diagnostic connector pin 13
	11	Line K for 38-pin diagnostic connector pin 14
	12	Positive from switch for re-circulation
B	1	Positive (0 to 8 V) for fan electronic control module (0 to 6 V)
	2	Serial line for digital display (instrument cluster pin "B 11")
	3	Signal from evaporator temperature sensor
	4	Reference voltage from air mixing motor (0 to 5 V)
	6	Signal from outside temperature sensor
	7	Signal from inside temperature sensor
	8	Negative for fan electronic control module
	10	Supply (0 to 12 V) for re-circulation gear motor (+12 V for switching on re-circulation)
	11	Supply (0 to 12 V) for re-circulation gear motor (+12 V for switching on re-circulation)
	12	Key-operated positive supply
	13	Positive for compressor control relay
	14	Supply (0 to 12V) for air mixing gear motor (+12V with "HI" function)
	15	Supply (0 to 12V) for air mixing gear motor (+12V with "LO" function)
	16	Reference voltage from electronic fan control module (0 to 12 V)

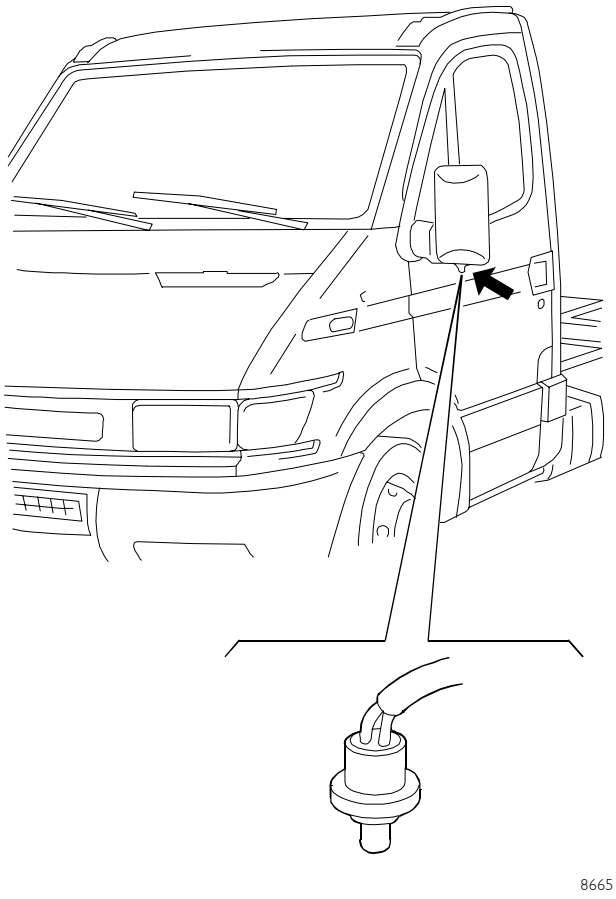

IV.107 OUTSIDE TEMPERATURE SENSOR

Outside air temperature sensor

This is an NTC sensor on the left wing mirror (Fig. IV.107) for both types of drive.

The resistance at 25 °C is 10 kOhm.

Operating range between - 30 °C and + 50 °C.

It is connected to pin 6 connector B of the control unit.

Inside temperature sensor

This is an NTC sensor located on the climate control module (Fig. IV.108) between the two "Re-circulation" and "ECO" switches.

It is ventilated and contains a motor/fan so that the temperature reading is not affected by stagnating air inside the dashboard which is not realistic.

The resistance is 2.2 kOhm at 25 °C

Operating range between + 5 °C and + 45 °C

It is connected to pin 7 connector B of the control unit.

The motor **A**, fan **B** and sensor **C** are a single part and are connected to the wiring by a single connector at pin 12.

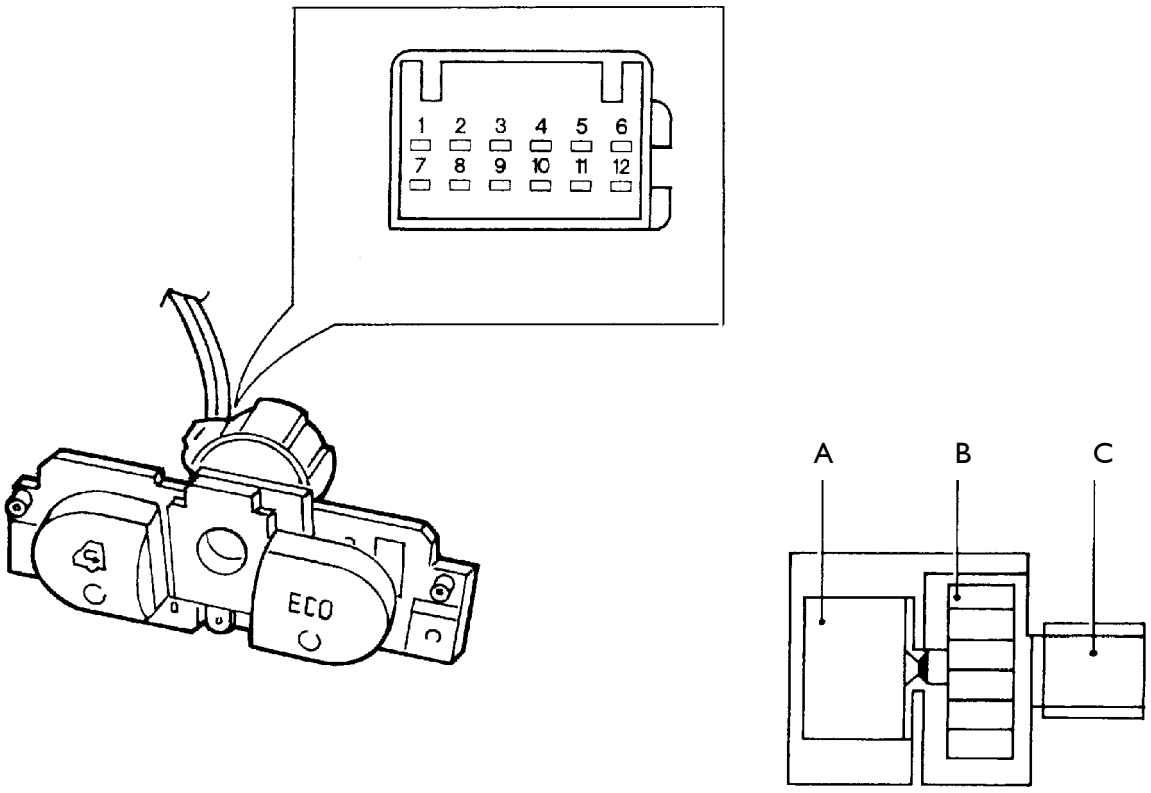

000260t

Pin	Function
1	Positive for motor
2	Negative for motor
3	Signal earth
4	Sensor signal for control unit (pin 7 connector B)
5	Positive from microswitch for "MAX DEF" function to control unit (pin 6 connector A)
6	—
7	Positive from "ECO" switch to control unit (pin 5 connector A)
8	Earth
9	+15/A supply
10	+15/A supply
11	Negative for lighting pictograms
12	Positive from re-circulation switch to control unit (pin 12 connector A)

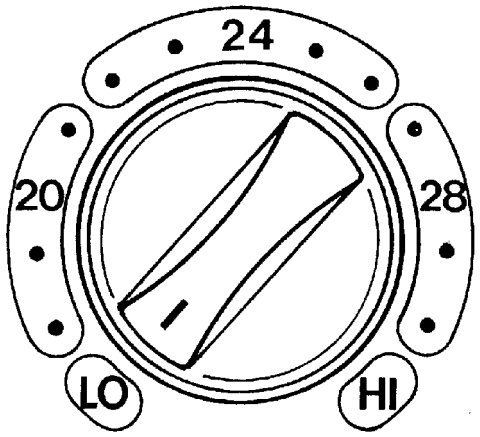

000255t

IV.108 REQUIRED TEMPERATURE SETTING KNOB

Blown air temperature sensor

This is an NTC sensor positioned inside the distributor unit upstream of the air distribution ports to the various vents.

The resistance at 25 °C is 10 kOhm.

Operating range between 0 °C and - 80 °C

It is connected to pin 1 connector A of the control unit.

Evaporator temperature sensor

This is an NTC sensor positioned inside the distributor unit and it is fitted directly on the evaporator. It causes switching on (>4 °C) and switching off (>3.5 °C) of the compressor electromagnetic clutch. The resistance at 25 °C is 10 kOhm.

Operating range between 0 °C and +25 °C.

It is connected to pin 3 connector B of the control unit.

Required temperature potentiometer

This is a potentiometer connected to the required temperature setting knob on the climate control panel. It detects the various angular positions (Fig. IV.109) and transmits a signal to the electronic control unit for a total of fifteen different positions (one per degree centigrade) two of which are the extremes "HI" and "LO" which correspond respectively to a request for the coldest and warmest positions.

It is supplied by the control unit at 5V.
Resistances R1 to R16 are approx. 700 Ohm.
Resistance R17 is approx. 1.1 Mohm
The total resistance R is approx. 11 kOhm.
It is connected to pin 2 and 9 connector A of the control unit.

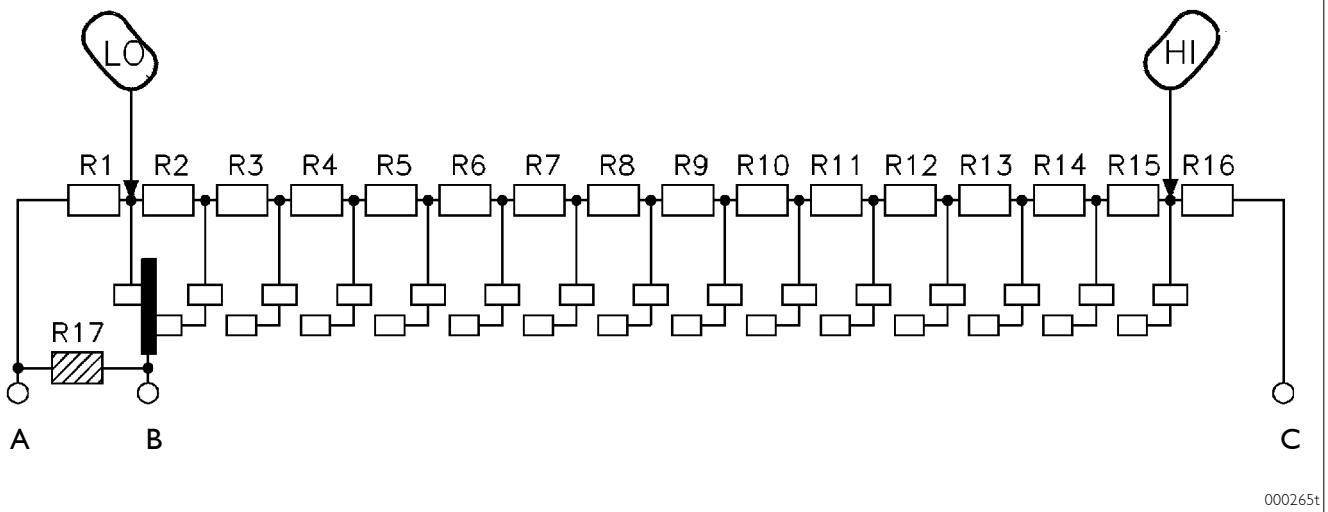

000265t

IV.109 POTENTIOMETER POSITION DETECTION LAYOUT
A. SIGNAL EARTH (MS7) - **B.** SIGNAL TO CONTROL UNIT PIN 2 CONNECTOR A - **C.** POSITIVE FROM CONTROL UNIT PIN 9 CONNECTOR A

Ventilation control potentiometer

This is a potentiometer connected to the ventilation control knob positioned on the climate control panel.

It detects the various angular positions (Fig. IV.111) and transmits a signal to the electronic control unit for a total of six different positions, four of which are manual flows (1, 2, 3, and 4), one no air flow and one automatic (AUTO).

It is supplied by the control unit at 5 V.

The resistance R1 to R7 are approx. 1.5 kOhm.

Resistance R8 is approx. 1.1 Mohm.

The total resistance R is approx. 10.5 kOhm.

It is connected to pins 3 and 9 connector A of the control unit.

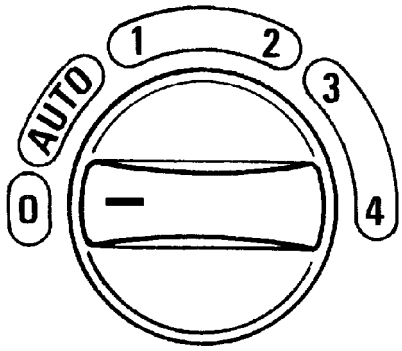

IV.110 VENTILATION CONTROL KNOB

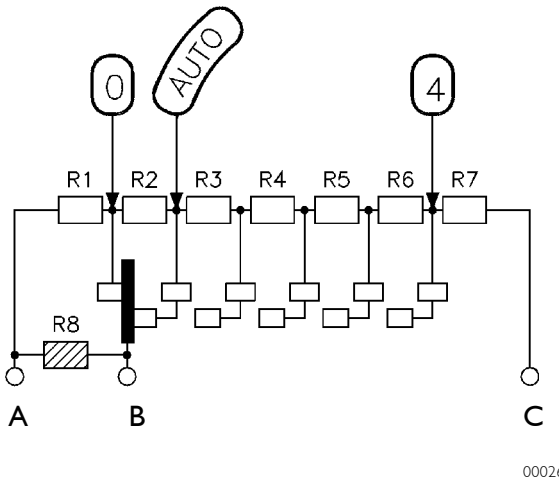

IV.111 POTENTIOMETER POSITION DETECTION LAYOUT
A. SIGNAL EARTH (ms7) - **B.** SIGNAL TO CONTROL UNIT PIN 3 CONNECTOR A - **C.** POSITIVE FROM CONTROL UNIT PIN 9 CONNECTOR A

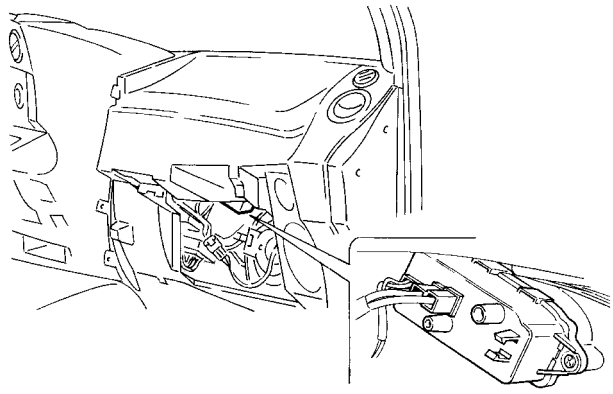

IV.112 LOCATION OF FAN ELECTRONIC CONTROL MODULE

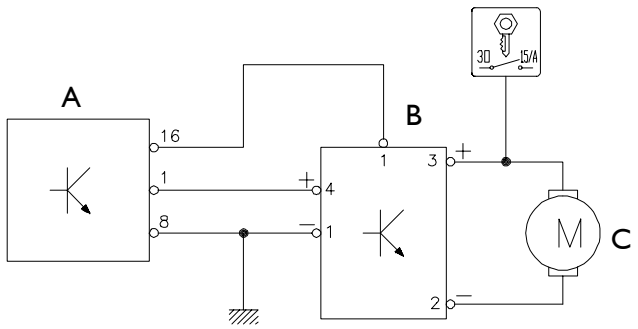

000268t

IV.113 ELECTRONIC FAN CONTROL MODULE CONNECTIONS
A. ELECTRONIC FAN CONTROL MODULE - **B.** ELECTRONIC CLIMATE CONTROL UNIT - **C.** FAN MOTOR

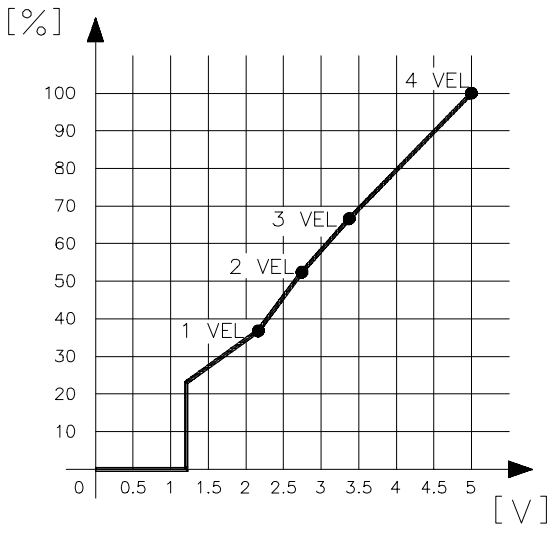

000269t

IV.114 GRAPH OF AIR FLOW RATE IN RELATION TO VOLTAGE

Electronic fan control module

This is an electronic circuit inside the distributor unit near the fan (Fig. IV.112) and it adjusts the fan speed.

It is driven by the control unit with a voltage of between o and 5 Volt.

It drives the fans with a voltage of 0 to 12 Volt.

It is connected to pins 1 and 16 connector B of the control unit.

The graph (Fig. IV.114) represents the air flow rate in relation to the control voltage from the control unit.

Air mixing gear motor

The gear motor formed of a motor and potentiometer is positioned inside the distributor unit and acts on the port that sends or does not send the flow of incoming air onto the heater radiator to be able to adjust the required temperature.

The potentiometer detects the actual position of the mixing port and informs the control unit of its position. The control unit reaches the two extreme positions, which correspond to the request for the coldest position "LO" and the warmest position "HI" inverting the polarity on pins 14 and 15 of connector B of the control unit.

+ 15 / - 14 for "LO" function

- 15 / + 14 for "HI" function.

Motor

This is supplied by the control unit at 12 V. It is connected to the control unit on pins 14 and 15 of connector B of the control unit. Loadless absorption is ≤ 60 mA, in D.C. it is ≤ 380 mA.

Potentiometer

It is supplied by the control unit at 5 V. The resistance is 4.7 kOhm. It is connected to the control unit on pins 7 and 9 connector A and on pin 4 connector B of the control unit.

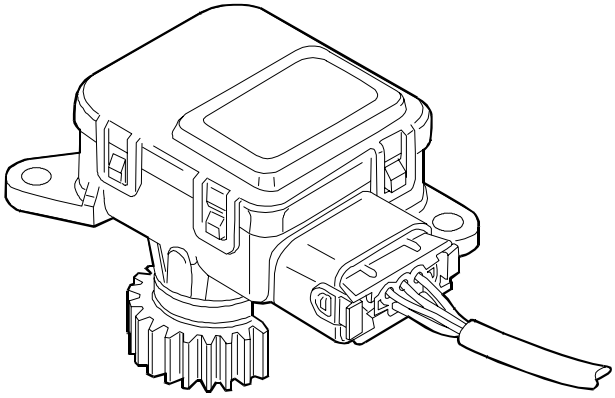

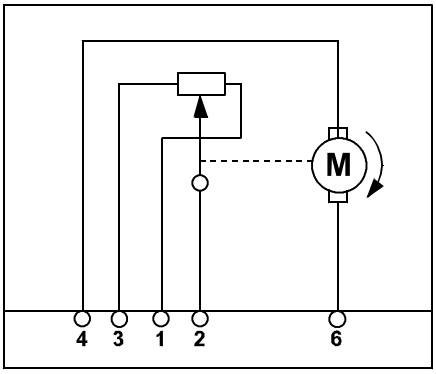

8669

Pin	Cable colour	Function
1	White-Blue	Positive (5 V) for potentiometer from pin 9 connector A of the control unit
2	Grey-Black	Reference voltage (0 to 5 V) from pin 4 connector B of the control unit
3	Black	Signal earth
4	Yellow-Green	Supply (0 to 12 V) for motor from pin 15 connector B of the control unit
5	-	-
6	Blue-Red	Supply (0 to 12 V) for motor from pin 14 connector B of the control unit

Re-circulation gear motor

The gear motor is located on the front part of the distributor unit and acts on the air inlet port.

The control unit opens or closes this port to control air inlet from outside or re-circulation inverting the polarity on pins 10 and 11 of connector B of the control unit.

+ 11 / - 10 to switch on re-circulation

- 10 / + 11 for outside air inlet.

There are no intermediate positions. It is supplied by the control unit at 12 V. It is connected to the control unit on pins 10 and 11 connector B of the control unit. Loadless absorption is ≤ 60 mA, in D.C. it is ≤ 380 mA.

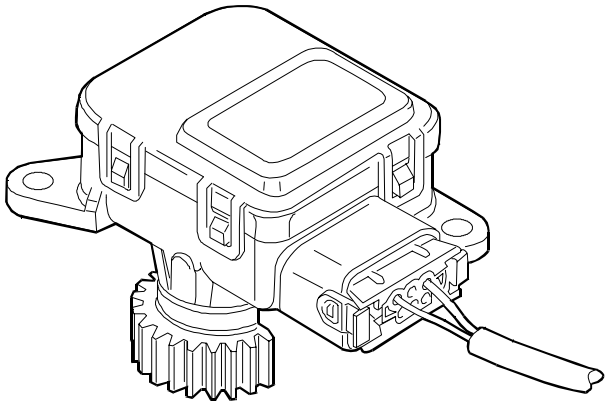

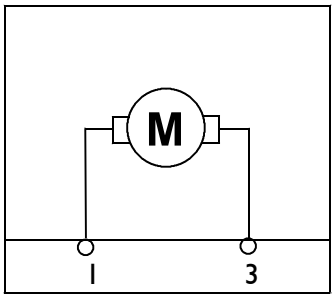

8668

Pin	Cable colour	Function
1	Blue-Red	Supply (0/12 V) from pin 11 connector B of the control unit
3	Brown	Supply (0/12 V) from pin 10 connector B of the control unit

Compressor

This is fitted on the left-hand side of the engine and it is a NIPPONDENSO SCROLL 08.

The fluid used is "Freon R 134A".
The quantity of fluid is 720 grams.
The type of oil used is solely ND Oil 08.
The quantity of oil is 80 grams.

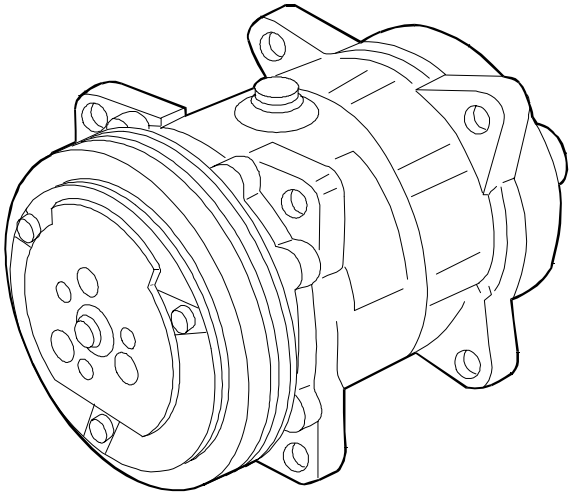

000274t

IV.115 COMPRESSOR

Safety pressure switches

These are fitted directly on the dryer filter (Fig. IV.117).
The minimum "A" and maximum "B" pressure switches make it possible to keep the pressure constant in the system between a minimum of 2 bar and a maximum of 27 bar, while the average set at 19 bar is used to switch on the condenser fan.

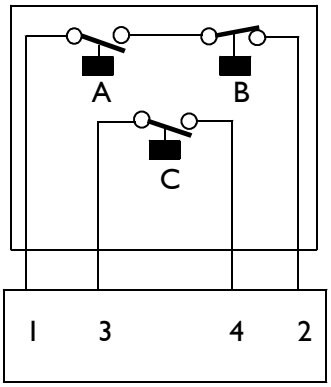

8666

IV.116 PRESSURE SWITCH UNIT WIRING DIAGRAM
A. MNIMUM = 2 BAR - **B.** MAXIMUM = 27 BAR - **C.** AVERAGE = 19 BAR

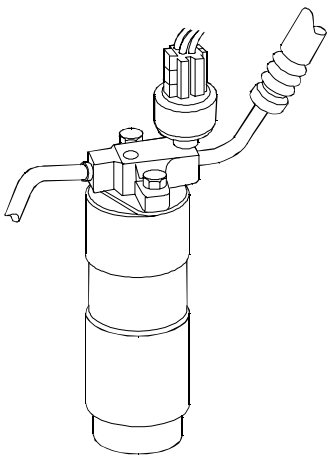

8666a

IV.117 PRESSURE SWITCH UNIT ON DRYER FILTER

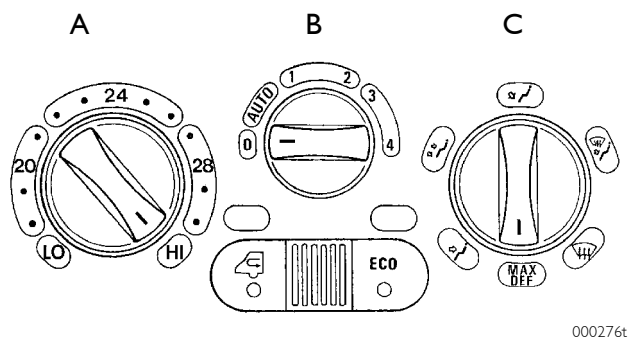

IV.118 CLIMATE CONTROLS ASSEMBLY
A. REQUIRED TEMPERATURE SETTING KNOB
B. SPEED CONTROL KNOB
C. AIR DISTRIBUTION KNOB

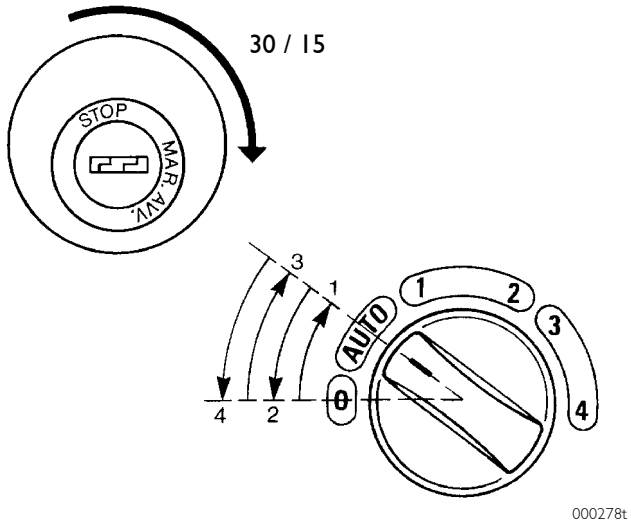

IV.119 IGNITION SWITCH AND FAN SPEED CONTROL KNOB SETTING

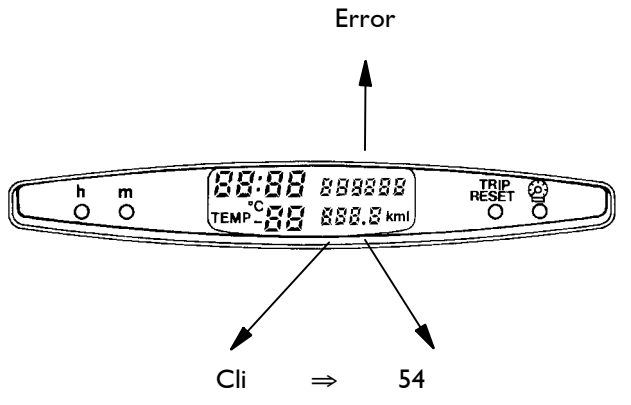

IV.120 DISPLAY ON INSTRUMENT CLUSTER

SYSTEM SELF-DIAGNOSTICS

Through suitable control logic the control unit is able to memorise and display a series of faults (present and/or intermittent) that may occur to the system.

In the event of these faults the control unit still continues controlling the system replacing the abnormal values detected with suitable "recovery" values which ensure minimal operation of the system.

As a fault arises, the control unit shows the wording "Error Cli" on the display on the instrument cluster.

– For preliminary information it is possible to show any faults on the display on the instrument cluster following a precise procedure.
– For complete more thorough diagnostics it is however necessary to use the diagnostic tools available to the service network such as MODUS.

Diagnostics through blink code

To find out which is the component concerned, proceed as follows:
Move the temperature setting knob to the "HI" position (Ref. A Fig. IV.118).
Move the fan control knob to the "0" position (Ref. B Fig. IV.118).
Move the air distribution knob to the "MAX DEF" position (Ref. C Fig. IV.118)
Engage the ignition switch (Fig. IV.119) at the services position (+15).
Within 10 seconds, operate the fan control knob (Fig. IV.119) with the following sequence:
"0" ⇒ "AUTO" ⇒ "0" ⇒ "AUTO" ⇒ "0".

At this point the display on the instrument cluster (Fig. IV.120) displays the error code. If more than one error is present, they are displayed every 3 seconds.

Blink codes

The table below shows the different error codes that may appear on the display on the instrument cluster instead of "CLI" during diagnostics.

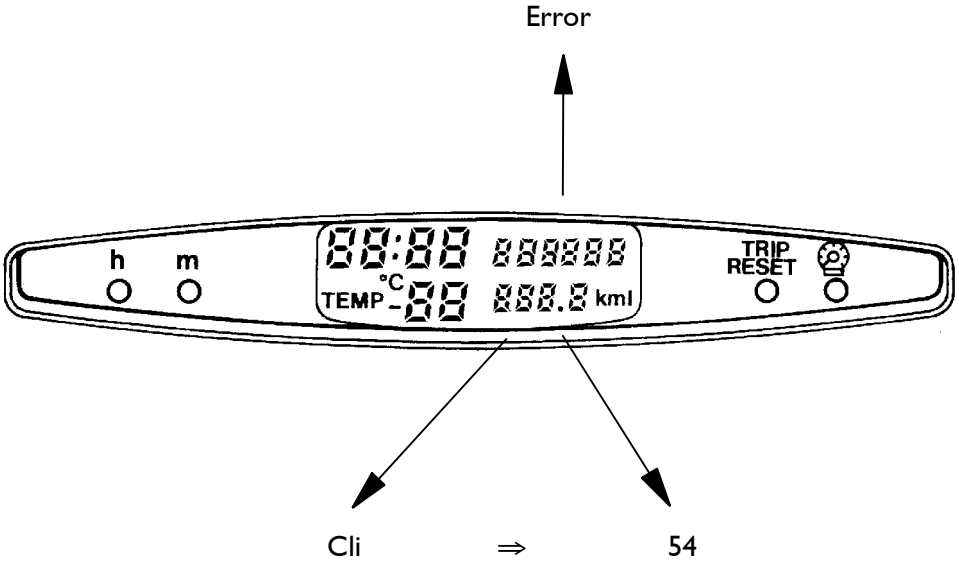

000279t

Codice	Description
14	Short circuit or open circuit of blown air temperature sensor
32	Short circuit towards earth of outside temperature sensor
34	Short circuit or open circuit of outside air temperature sensor
42	Short circuit towards earth of inside temperature sensor
44	Short circuit or open circuit of inside air temperature sensor
52	Short circuit towards earth of evaporator temperature sensor
54	Short circuit or open circuit of evaporator temperature sensor
65	Air mixing gear motor failure
82	Short circuit towards earth of required temperature potentiometer
84	Short circuit or open circuit of required temperature potentiometer
92	Short circuit towards earth of ventilation control potentiometer
94	Short circuit or open circuit of ventilation control potentiometer
B2	Short circuit towards earth of air mixing potentiometer signal
B4	Short circuit or open circuit of air mixing potentiometer signal
D5	Fan electronic control module failure
E2	Short circuit towards earth of pin 9 of connector A of control unit for supplying potentiometers
E3	Short circuit towards positive of pin 9 of connector A of control unit for supplying potentiometers
F6	Supply voltage over maximum limit
F7	Supply voltage below minimum limit

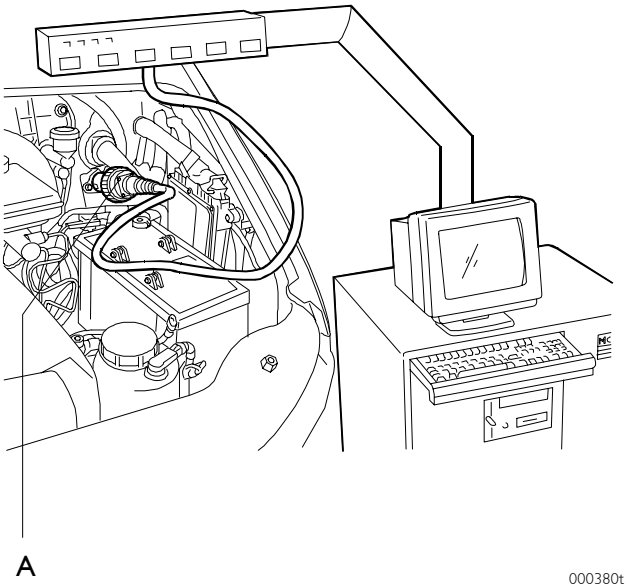

IV.121 DIAGNOSTICS USING MODUS

Diagnostics using Modus

Use adapter 99331043 (A).

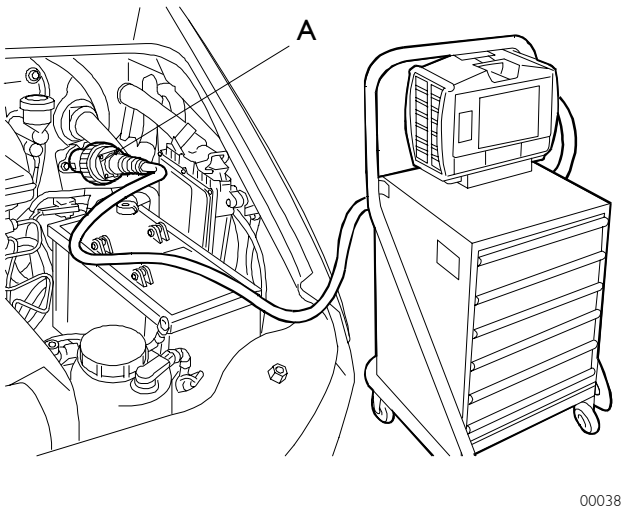

IV.122 DIAGNOSTICS USING IWT

Diagnostics using IWT

Use adapter 99331043 (A).

AIR BAG

General

The air bag is a passive safety device comprising one or two cushions which, in the event of a head-on crash, inflate automatically setting themselves between the body of the occupants and the front structures of the cab.

The system is always integrated by seat belts with pretensioner, which are controlled by the air bag control unit, in the event of head-on crashes.

The system does not cut in for front crashes at low speed, side crash, overturning or crashes from behind.

NB The air bag is complementary to the use of the seat belts and not in replacement of them.

Inflation of the bags without the restraint of the belts compromises the safety of the driver and passengers.

The system components are connected to one another and with the rest of the electric system through a special harness, that can be easily recognised as it has a yellow sheath which is connected to the cab/bonnet cable by a 6-cell connector.

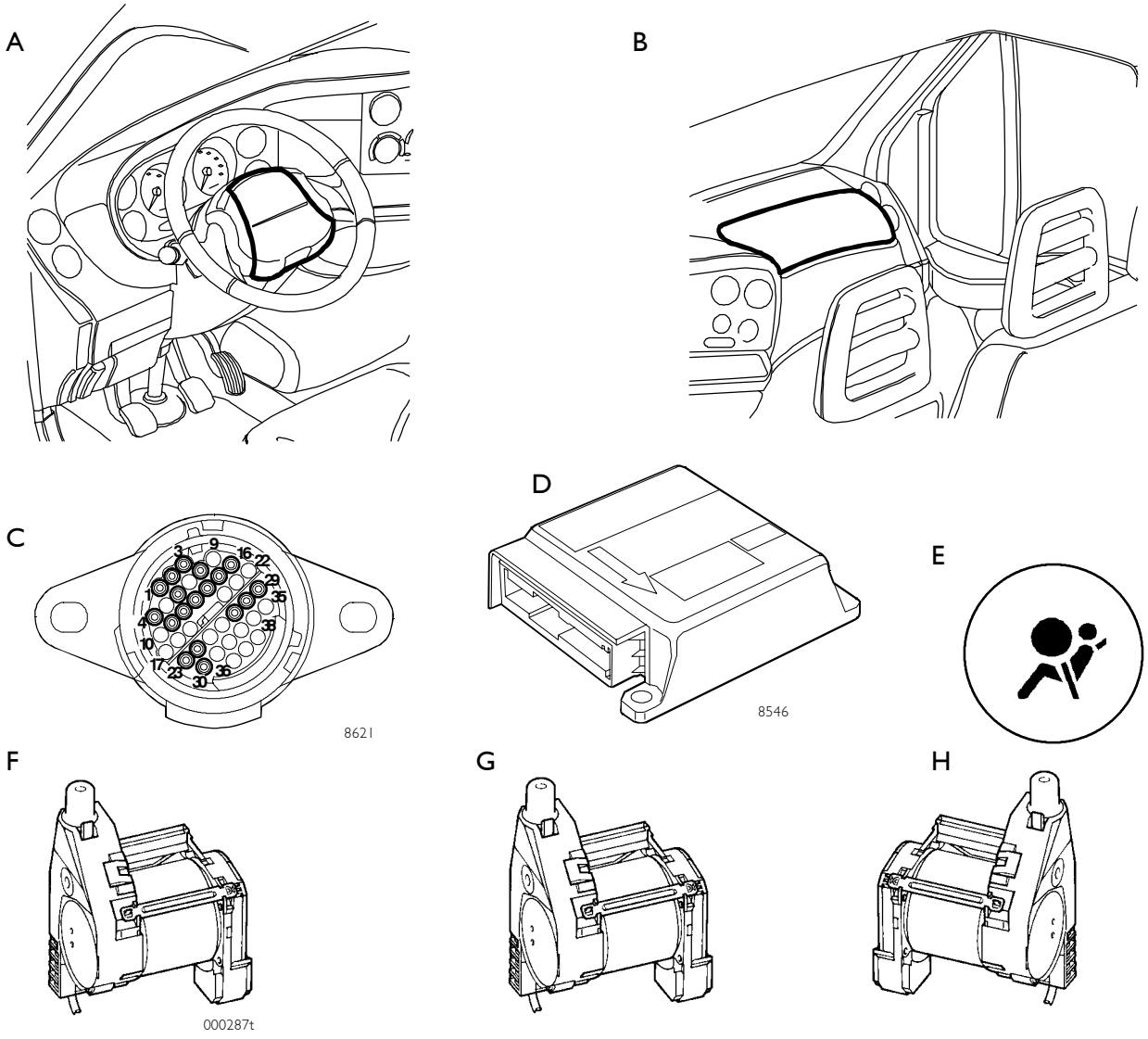

IV.123 AIR BAG SYSTEM COMPONENTS

A. DRIVER'S AIR BAG MODULE - **B.** PASSENGER'S AIR BAG MODULE - **C.** 38-PIN DIAGNOSTIC CONNECTOR - **D.** ELECTRONIC CONTROL UNIT - **E.** AIR BAG FAILURE WARNING LIGHT ON INSTRUMENT CLUSTER - **F.** DRIVER'S REEL WITH PRETENTIONER - **G.** CENTRE REEL WITH PRETENSIONER - **H.** PASSENGER'S SIDE REEL WITH PRETENSIONER.

Operation

The air bag system consists of a cushion which inflates instantly contained in a special recess in the centre of the steering wheel for the driver and in the dashboard for the two passengers.

In the event of a head-on crash a deceleration sensor inside the air bag control unit activates the pretensioners and the instantaneous inflating device of the cushion or cushions which act as protective barrier between the body of the occupants and the vehicle structure. Immediately afterwards the driver's air bag and, if requested, the passenger's air bag deflate.

Deployment of the air bag system produces heat and a small amount of powder. This powder is not harmful and does not cause fire. In addition the surface of the deployed bags and the inside of the vehicle may be covered with dust: this may irritate the skin and eyes. In the case of exposure, wash with neutral soap and water.

NB Turning the ignition switch to MAR, the air bag failure warning light turns on for four seconds as system self-diagnostics takes place.

Each time the system is activated, the control unit keeps the failure warning light on the instrument cluster on and it will be necessary to change the whole system (control unit, belts and pretensioners, bags and harness).

The system does not require any maintenance or checks.

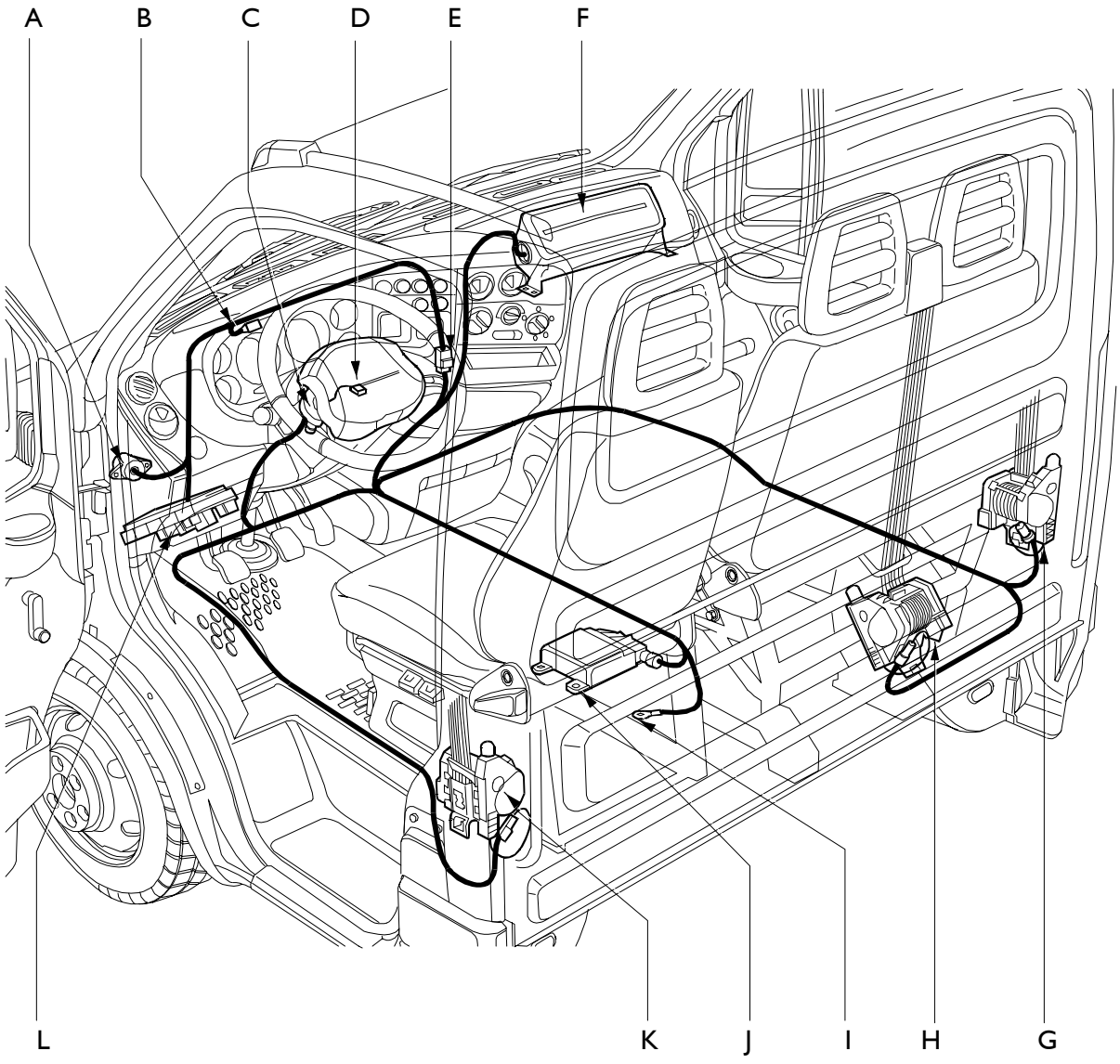

IV.124 LOCATION OF AIR BAG SYSTEM COMPONENTS AND CABLE

A. 38-PIN CONNECTOR FOR DIAGNOSTICS - **B.** AIR BAG FAILURE WARNING LIGHT - **C.** CLOCK SPRING - **D.** DRIVER'S AIR BAG MODULE - **E.** CONNECTION BETWEEN CAB/BONNET CABLE AND AIR BAG CABLE - **F.** PASSENGER'S AIR BAG MODULE - **G.** PASSENGER'S REEL WITH PRETENSIONER - **H.** CENTRE REEL WITH PRETENSIONER - **I.** AIR BAG EARTH - **J.** ELECTRONIC CONTROL UNIT - **K.** DRIVER'S REEL WITH PRETENSIONER - **L.** RELAY/FUSE HOLDER SUPPORT

Rules of safety to be followed for operations on vehicles fitted with the air bag system supplied to us by the supplier.



The following rules must absolutely be followed when doing any work concerning vehicles fitted with safety system with air bag.

Preliminary rules



Remember that air bag modules are devices to be handled with care. Their use, transport and storage are ruled by the following procedures.

Before starting any body repair work, welding, work requiring the removal of air bags or of the control unit, it is necessary to:

- move the ignition key to "STOP" and remove it
- always disconnect the battery, i.e.: disconnect the two terminals from their post and isolate them taping appropriately
- wait for at least 10 minutes before proceeding
- disconnect the control unit connector.

Store the modules with the cover upwards in a key-lockable metal cabinet. The cabinet, to be used for this purpose only, must not be used for storing other types of material, especially if inflammable.

All the connectors used and wired on air bag modules contain a short circuit clip. Up to the moment in which the air bag modules are connected to an appropriate source of energy, there is no possibility of undue activation of the units.

A system component not activated during an accident is to be considered still "active".

Therefore, undeployed components to be removed from vehicles (due to faults, guarantee expiry or other causes) must be returned to the special centre through the procedure described below.

NB The assembly or disassembly of components may ONLY be carried out by competent and authorised personnel.
The failure to follow the instructions given below may involve unwanted activation of the system, personal injury or unnecessary system repair. IT IS STRICTLY PROHIBITED TO DISASSEMBLE AIR BAG MODULES STRIPPING THEIR COMPONENTS.

All the system components have been specifically designed to work on vehicles of a specific brand and type. Therefore, air bags cannot be adapted, re-used or installed on other vehicles than the one for which they have been designed and manufactured.

NB Any attempt to re-use, adapt or install them on a different type of vehicle may cause serious or lethal harm to the occupants of the vehicle in the event of a crash.

Operations after an accident

NB If any component of the safety system is damaged following an accident, it should be replaced.
Do not attempt to repair the control unit, clock spring or air bag modules.

Accidents with or without deployment of the air bag device

Some system components should be inspected whether the system has been activated or not. These components are:

- steering column;
- steering column support;
- electronic control unit and modules retaining area;
- clock spring;
- dashboard (in the passenger's air bag area).

The component must be replaced in the presence of distortion, breakage and flexure.

Accidents with the deployment of the air bag device

If the vehicle has undergone a head-on crash involving the total deployment of the system, the following components must be replaced:

- air bag modules;
- pretensioners;
- electronic control unit;
- clock spring.

The harness and connectors should be inspected for signs of burns, melting of the outer insulation or damage due to excessive heat.

Any signs of damage on the clock spring in the control unit retaining area and on the air bag modules call for the replacement of the damaged components.

Painting work

No particular rules of safety are to be followed for painting work followed by oven drying, as the modules and pretensioners have been designed in such a way that they will not be damaged heating the outer surfaces of the vehicle with normal paint drying systems.

It is prohibited to use naked flames near the modules.

All electronic control units (including the air bag system) should always be removed if their temperature in certain environments may reach or exceed 85 °C.

Health hazards

The precautions to be taken when handling deployed air bags are the following:

- use protective polyethylene gloves and safety goggles;
- after touching triggered air bags, wash your hands and the parts of the body exposed with soap and water.

Effects of over-exposure

There is no potential hazard of exposure to the propellants as the system is completely sealed.

The propellant mixture is in the solid state, therefore inhalation is impossible even in the event of breakage of the gas generator cartridge.

Should any gas come out there is not health hazard.

Avoid any contact with the skin and do not swallow the propellant.

In the event of:

- contact with the skin wash immediately with soap and water;
- contact with the eyes: wash immediately with running water for at least 15 minutes;
- inhalation: take the person outdoors immediately;
- swallowing: induce vomit if the person is conscious.



Always call a doctor for all the above conditions.

Rules of safety in handling air bag modules

Under normal conditions the driver's and passenger's air bag are activated by the electronic triggering device during the crash. The gas developed (mainly nitrogen) under these conditions is not harmful.

Personnel carrying out operations on the device fitted on vehicles must absolutely adhere to the rules of safety given below.

Personnel operating on these devices must be suitably trained and follow the precautions given below:

- In open (exploded) air bag removal and replacement operations handle only one air bag at a time and for removal use polyethylene gloves and protective goggles.
- Always rest the air bag module with the opening lid and pre-split groove facing upwards. Do not put anything on top of this lid.
- Afterwards wash your hands carefully with neutral soap and in the event of contact with the eyes of residual powder, rinse immediately with running water.
- Before starting work on the system, disconnect the two battery cables (firstly the negative one) isolate the terminals with insulating tape and wait at least 10 minutes before proceeding.
- The metal components of an air bag that has just been deployed are very hot. Avoid touching these components for 20 minutes from the time of air bag deployment.
- Do not carry out repairs on air bag modules. Send all faulty modules to the supplier. Do not heat the air bag module for example by welding, hammering, drilling, mechanical machining etc.
- Never install on the vehicle air bags that have been dropped or show signs of any type of damage.
- It is prohibited to keep air bags together with inflammable material or fuel.
- The gas generators must not come into contact with acids, greases and heavy metals. Contact with these substances may cause the formation of poisonous, harmful gas or explosive compounds.
- Never use naked flames near air bag devices and system components.

Any spare parts should be stored in their original packing and temporary storage should follow the same procedure as for an undeployed air bag removed from the vehicle, i.e. a key-lockable metal cabinet must be used, especially for this purpose (metal, shock resistant cabinet with grilles to allow natural ventilation inside). The cabinet must have special warning notices (DANGER EXPLOSIVES - NO NAKED FLAMES - NOT TO BE OPENED BY UNAUTHORISED PERSONS).

Air bag module scrapping

The air bag modules fitted on the vehicle must not be scrapped with the vehicle itself, but removed beforehand and then deployed as described in the following pages.

Air bag units must not be scrapped without firstly deploying them.

If the air bag module has not been activated during a crash, the device is to be considered as still charged.

All unexploded material MUST NOT BE ACTIVATED and should be sent to a specialised centre (for Italy to GECMA, Chivasso) with the following wording on the delivery note:

- AIR BAG DEVICE CONTAINING EXPLOSIVE CHARGE TO BE DEACTIVATED

The devices must absolutely be shipped in the same package in which the spares are received and if this is not available it is possible to ask the SPARES division for the package only.

Clearly in the case of replacing air bag devices the original packing should be kept intact for sending the undeployed device.

For FOREIGN MARKETS follow local regulations.

The failure to follow the procedures listed here may cause undue activation of the air bag units and personal injury. Undeployed air bag units must NOT be disposed of through the usual refuse disposal channels. Undeployed air bag units contain harmful substances for the health and may cause personal injury if the sealed container which contains them is damaged during disposal.

Rules of safety in handling pretensioners

In the event of a head-on crash, the driver's and passenger's pretensioners are activated an instant before the air bag modules.

The personnel that intervenes on the devices must be suitably trained and observe the following precautions:

- When handling activated pretensioners, i.e. when the propellant has already been triggered, use protective gloves and goggles.
- At the end of operations wash your hands carefully with neutral soap and in the event of contact of residual powder with the eyes, rinse immediately with running water.
- Disconnect the two battery cables (firstly the negative one) isolate the terminals with insulating tape and wait at least 10 minutes before proceeding.
- During activation the pretensioner develops heat; it is therefore necessary to wait at least 10 minutes after deployment, before touching them.
- During transport or handling, pretensioners should be protected from shocks or falling; pretensioners that have been knocked or dropped must not be used and must be returned to the supplier stating the reason.
- Pretensioners should not be carried by the belt.
- Pretensioners must be protected from sparks and naked flames; they should not contact surfaces for over 6 hours with temperatures above 100 °°C .
- The gas generator propellant that is not burnt is inflammable, therefore, the parts of the generator should never be taken to pieces, damaged or tampered with.
- It is prohibited to store pretensioners with inflammable materials or fuel.
- The gas generators must not come into contact with acids, greases and heavy metals. Contact with these substances may cause the formation of poisonous, harmful gas or explosive compounds.
- Belts with pretensioners may only be stored in key-lockable places or cabinets, ventilated and away from naked flames and sources of heat.

 **After every crash in which the pretensioner has been activated, the belt is unserviceable and must be replaced.**

Scrapping pretensioners

Undeployed pretensioners (not fitted on the vehicle) to be scrapped must firstly be deployed; those not activated but fitted on the vehicle must be removed and not scrapped with the vehicle.

If the pretensioner was not activated during a crash, the device is to be considered as still active; proceed as described i this manual.

Operations on system components

At the end of every operation on the system, it must be checked using Modus, I.W.T. or other diagnostic tools.

During assembly, the air bag components are labelled with a sticker with a removable part stating the date of installation of the system and components. The removable part is detached and the information on it is filed together with the system check report supplied by Modus, by the workshop that installed the components.

After 10 years from installation, unless the components are replaced before that time, a new air bag system (cable and components) should be installed. As mentioned previously, the data concerning the components and the date of system installation are to be filed.

Removing and scrapping an activated air bag module and pretensioner from a vehicle

Always wear gloves and safety goggles for handling an activated air bag or pretensioner. Wash the hands and exposed skin immediately with neutral soap and water after handling the components of an air bag module or pretensioner. In the case of exposure to secondary products, immediately rinse the eyes with running water. The failure to comply with these instructions may result in injury.

To remove and scrap an already activated air bag module and pretensioner:

1. Follow the instructions given in this manual for removing activated air bag module and pretensioners.
2. Disconnect the air bag module and pretensioner mechanical fastenings.
3. Disconnect the component connector from the air bag harness.
4. Place the air bag module and pretensioner in a special sealed polythene bag.
5. Send to the authorised collection/disposal centre.
6. Dispose of, recycle or scrap deployed air bag modules and pretensioners in the appropriate manner.

The residues left by combustion of the propellant require some consideration. They are mostly concentrated in the generator body or in small quantities in the bag. These residues may contain copper or chloride (e.g. potassium chloride). If the propellant is based on sodium azide or potassium nitrate, the combustion residues are highly alkaline and corrosive. **Always wear appropriate protection for the eyes and skin.** Deployed air bags should always be stored in dry, suitably ventilated places.

Removing or scrapping an air bag module that has not been deployed from a reparable vehicle



Do not cut cables or tamper with the connector between the vehicle harness and the air bag module. The connector contains a safety circuit.

If the connector is cut or removed from the air bag unit, the safety device is disabled and this could cause unforeseen activation with serious consequences for the physical integrity of people.
Air bag systems have a reserve power unit in the control unit. This must be deactivated disconnecting the two battery terminals and waiting for at least 10 minutes before doing any work on any components of the air bag.
When handling an air bag module, always keep the bag and outer cover away from the body. When positioning an active air bag on a bench or other surface, always place the bag and its cover upwards, not on the resting surface and away from people. Never put any object near an active air bag as it would become a bullet in the event of deployment.



Always keep active, undamaged, air bag modules and pretensioners in a cool, dry, locked and safe place. Do not expose to naked flames or temperatures above 150 °C. Do not cut, drill, braze weld an air bag module or its components with electric current. Never expose an air bag module or pretensioner to electric currents. The failure to comply with these instructions may damage the unit, cause fire, cause unforeseen deployment and serious harm to persons.

Active, damaged air bag modules and pretensioners (e.g. breakage of the electrical connection) must be kept away from corrosive or oxidising substances. The failure to comply with these instructions may cause fire, and/or serious harm to persons.

NB The air bag modules and pretensioners have an energy reserve. This decive gives the electric pulse needed to deploy the bag if the battery or cables are damaged during the crash before the sensor activates the gas generator.

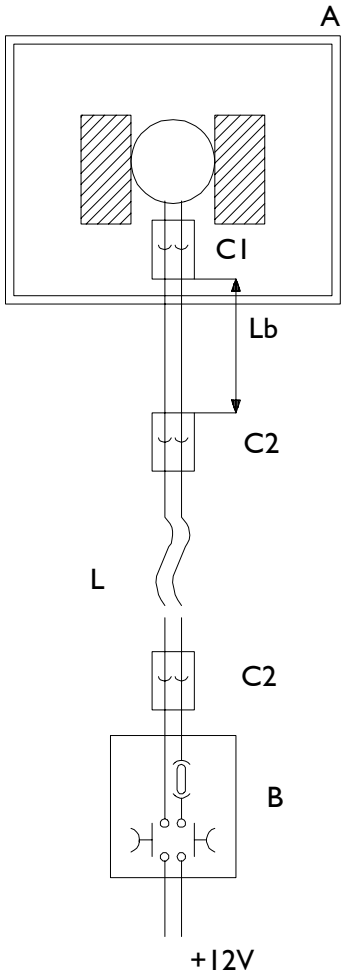

IV.125 REMOTE DEPLOYMENT OF AIR BAG MODULES

C1 = air bag module connector
C2 = Connector to remote deployment device (connector for air bag with circuit clip; counterparts with male pins on air bag side)
Lb = bridle length - approx. 1 m
L = general cable, safety distance 10 m

A. Enclosed area
B. Remote deployment device

Deployment of an air bag

Remote activation

General instructions

1. The deployment procedure can be carried out in a suitably identified and enclosed open area away from potentially inflammable materials, fluids or other substances and from persons. Place the air bag module on a firm surface and clamp it closely.
2. Clean the area on which the module is placed from materials and bits (glass, instruments, pieces, etc.) which could be thrown out during deployment.
3. Make sure that connector C2 is disconnected from the remote deployment device (10 m).
4. Connect the electrical connector C1 specified by the vehicle manufacturer to the air bag module
5. Connect connector C2 to the remote deployment device.
6. Connect the remote deployment device to a 12 V circuit or equivalent device.
7. Make sure all persons are under shelter.
8. Wear accident prevention goggles and protective clothing.
9. Press the double deployment button
10. After deploying an air bag module, let it cool before touching it (about 20 min.).
11. Dispose of, recycle or scrap activated air bag modules according to the cases, as described in the corresponding chapters.

Deployment of air bag modules and electronic pretensioners still on board of irreparable vehicles

This procedure is followed when the vehicle with one or more active air bags needs to be scrapped. This procedure applies whether the air bag and/or pretensioner system is still intact or not.
It is advisable to deploy the explosive charges on the vehicle directly connecting the electric connector of the single module to the remote deployment system.

The deployment procedure must be carried out away from other persons in a suitably identified area. Check that no type of object has been left near the modules and pretensioners and make sure that there are no inflammable liquids in the vicinity. No-one should remain on board during deployment and remember to close the vehicle doors. Personnel should stay under shelter (e.g. behind a wall, vehicle, etc.) to protect themselves from any objects that may be thrown. Leave the generators and modules to cool after deployment (wait at least 20 min.). The failure to follow these instructions may result in serious physical harm.

General instructions

1. Follow all the WARNINGS, PRECAUTIONS and safety instructions given in this manual.
2. Take the vehicle to the area foreseen.
3. Remove all materials and bits (glass, instruments, pieces, etc.) around the air bag cover and check that there are no inflammable fluids in the immediate vicinity.
4. Disconnect the two battery cables (firstly the negative one) and wait at least 10 minutes before proceeding.
5. Use a connection bridle (L = approx. 1 m) with specific terminal connector for electrical connection with the module to be deployed.
6. Reach the electrical connection of the module in question (air bag or pretensioner) following the instructions given in this manual.
7. Disconnect connector C1 of the air bag module or pretensioner.
8. Check that connector C2 is disconnected from the remote deployment device.
9. Connect electric connector C1 of the air bag module or pretensioner to the connection bridle of the remote deployment device.
10. Connect connector C2 to the remote deployment device.
11. Make people go to a safe place.
12. Connect the remote deployment device to a 12 V circuit or equivalent device.
13. Press the double activation button to deploy all the air bag modules and pretensioners at the same time.
14. After deploying the air bag modules and pretensioners always let them cool before touching them (about 20 min.).
15. Once the modules and pretensioners have been deployed the vehicle can be scrapped - by squashing or crushing - and/or recycled depending on the cases.

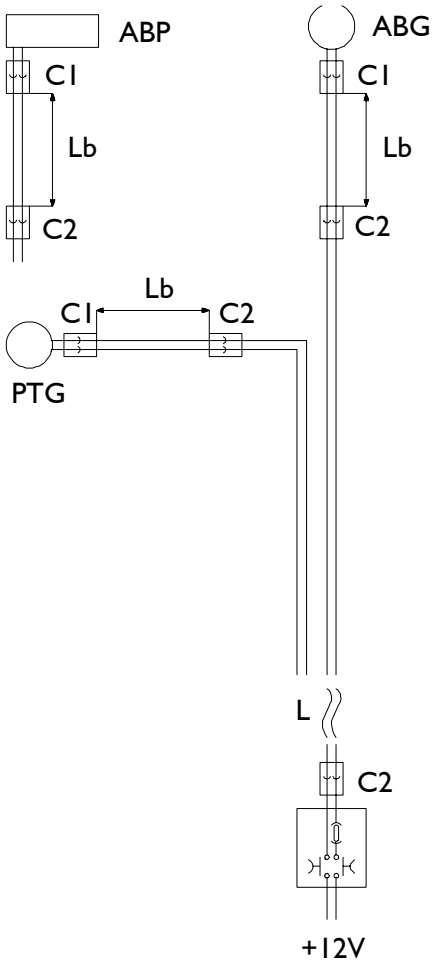

IV.126 LAYOUT FOR DEPLOYING EXPLOSIVE CHARGES ON THE VEHICLE, SINGLE DEPLOYMENT

ABG = driver's air bag
ABP= passenger's air bag
C2 = connector to remote deployment device
C1 = specific connector to explosive charge
L = general cable, safety distance 10 m
Lb = bridle length
PTG= driver's pretensioner

A. remote deployment device

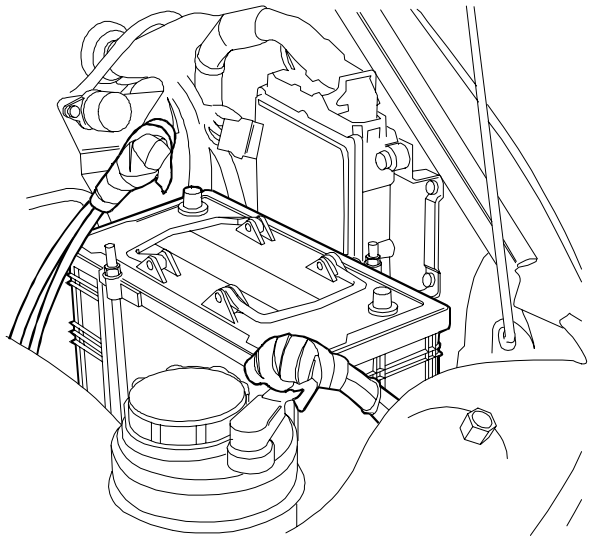

8547

IV.127 BATTERY CABLE INSULATION

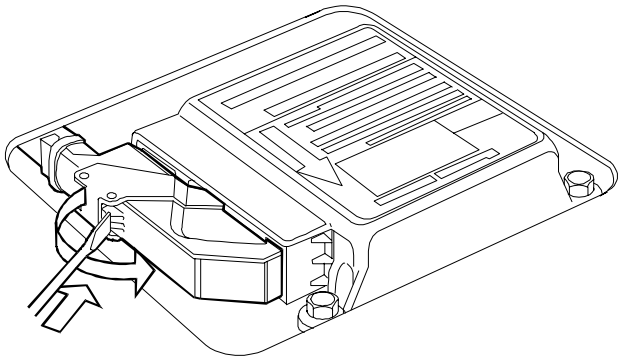

8548

IV.128 REMOVING THE CONNECTOR FROM THE CONTROL UNIT

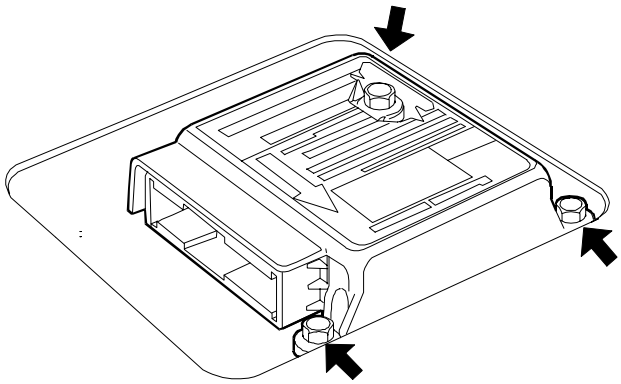

8549

IV.129 REMOVING THE CONTROL UNIT

SYSTEM COMPONENTS

Electronic control unit

The electronic control unit is located on the floor at the side of the driver's seat between the gearshift lever and the parking brake lever; it is supplied at 12 Volt by a key-operated device, but it is still in a condition to be able to work for about 200 msec after a power cut off.

This is possible due to the presence of a buffer condenser inside which accumulates electric energy for normal operation of the control unit and generate the signal for triggering the explosive capsule.

This way system operation is guaranteed if the crash causes a power system failure (for example damage or breakage of the battery, power cable cut-off etc.).

The control unit must be directed with the arrow printed on the sticker facing the vehicle direction of travel. This is absolutely necessary as it determines the direction in which the deceleration sensor reads the values for defining the crash condition and thus triggering the air bag.

The electronic control unit should always be replaced after a crash that causes deployment of the complete system (air bag and pretensioners).

To remove the control unit:

- follow the rules of safety given on page IV.89 and the ones that follow
- disconnect the battery cables (firstly the negative one then the positive) and isolate them taping the terminals (Fig. IV.127)
- wait at least ten minutes before proceeding
- remove the cover under which the control unit is to be found
- using a small screwdriver on the catch of the connector that locks the connector fastening lever, turn the latter outwards (Fig. IV.128)
- disconnect the connector from the control unit
- slacken the three screws fastening the control unit to the floor (Fig. IV.129).

One-connector electronic control unit pin-out

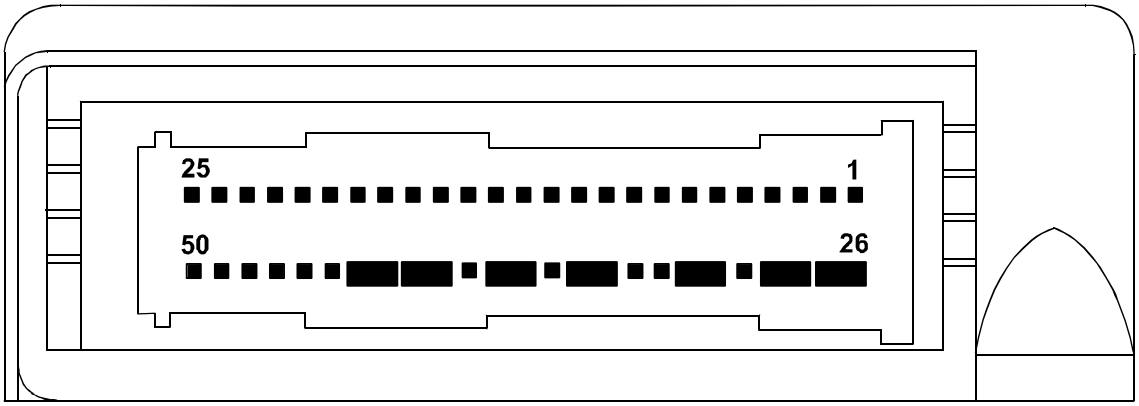

000283t

Pin	Function	Pin	Function
1	Positive for driver's pretensioner	26	Driver's pretensioner short circuit
2	Negative for driver's pretensioner	27	Driver's pretensioner short circuit
3	Positive for passenger's pretensioner	28	Passenger's pretensioner short circuit
4	Negative for passenger's pretensioner	29	Passenger's pretensioner short circuit
5	Key-operated positive supply	30	—
6	Earth	31	Earth short circuit
7	—	32	Short circuit
8	—	33	—
9	Line k for diagnostics	34	—
10	Positive for driver's bag	35	Driver's bag short circuit
11	Negative for driver's bag	36	Driver's bag short circuit
12	—	37	—
13	Positive for passenger's bag	38	Passenger's bag short circuit
14	Negative for passenger's bag	39	Passenger's bag short circuit
15	—	40	Failure warning light
16	Positive for centre pretensioner	41	Centre pretensioner short circuit
17	Negative for centre pretensioner	42	Centre pretensioner short circuit
18	—	43	—
19	—	44	—
20	—	45	—
21	—	46	—
22	—	47	—
23	—	48	—
24	Earth for diagnostics	49	—
25	—	50	—

The figure shows the components of the AIRBAG system with two-connector control unit. This type of control unit shall be fitted on the vehicles in the future to replace the one-connector control unit.

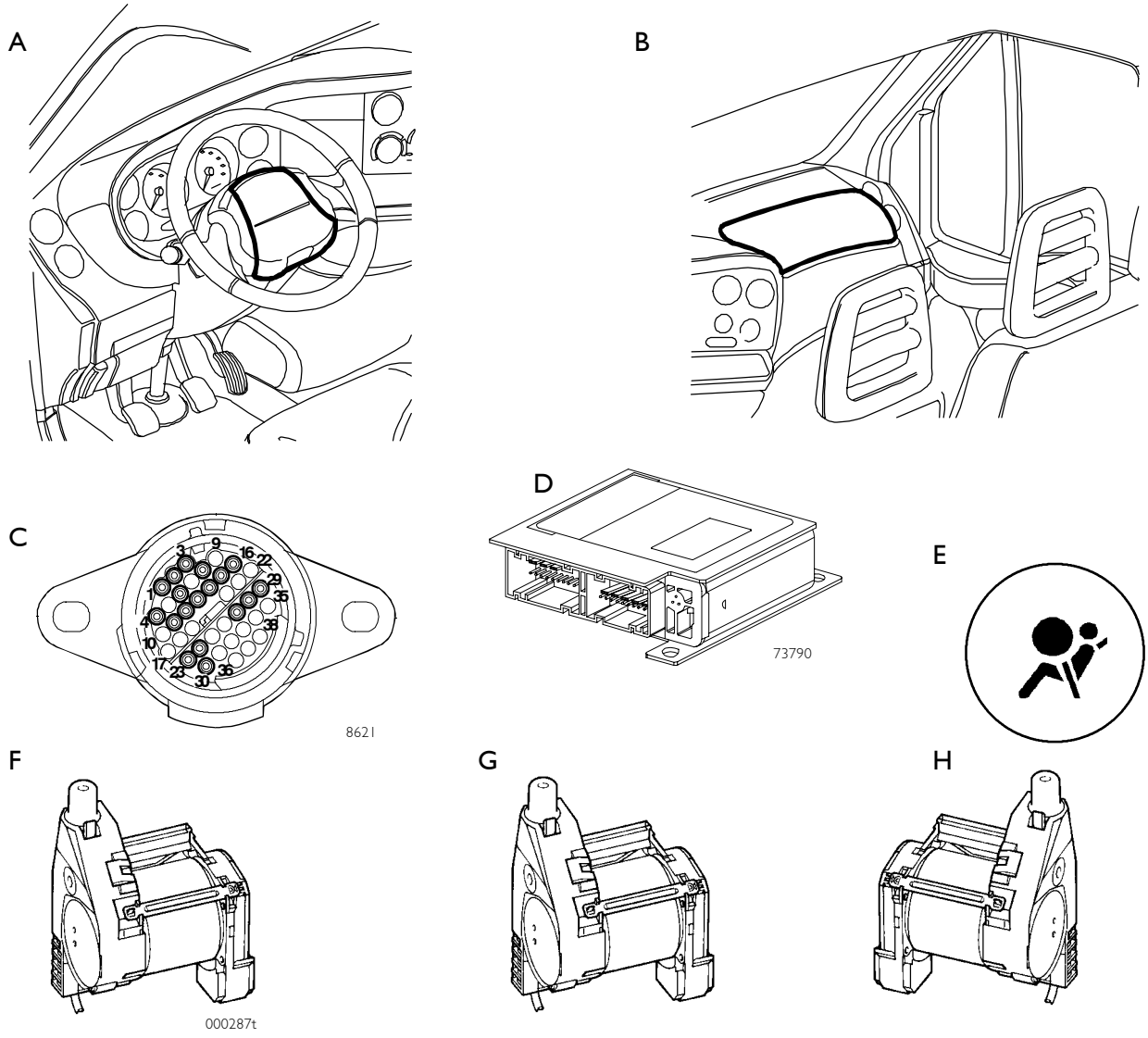

IV.130 AIR BAG SYSTEM COMPONENTS

A. DRIVER'S AIR BAG MODULE - **B.** PASSENGER'S AIR BAG MODULE - **C.** 38-PIN DIAGNOSTIC CONNECTOR - **D.** ELECTRONIC CONTROL UNIT - **E.** AIR BAG FAILURE WARNING LIGHT ON INSTRUMENT CLUSTER - **F.** DRIVER'S REEL WITH PRETENTIONER - **G.** CENTRE REEL WITH PRETENSIONER - **H.** PASSENGER'S SIDE REEL WITH PRETENSIONER.

The two-connector control unit operates within a temperature range of -40 a +85°C with a maximum inclination angle tolerance at installation of ±4°. The control unit weight is 200g max and features software version 4.4 and hardware version 11.0.
The following figure represents a perspective view of the electronic control unit with two connectors (A and B).

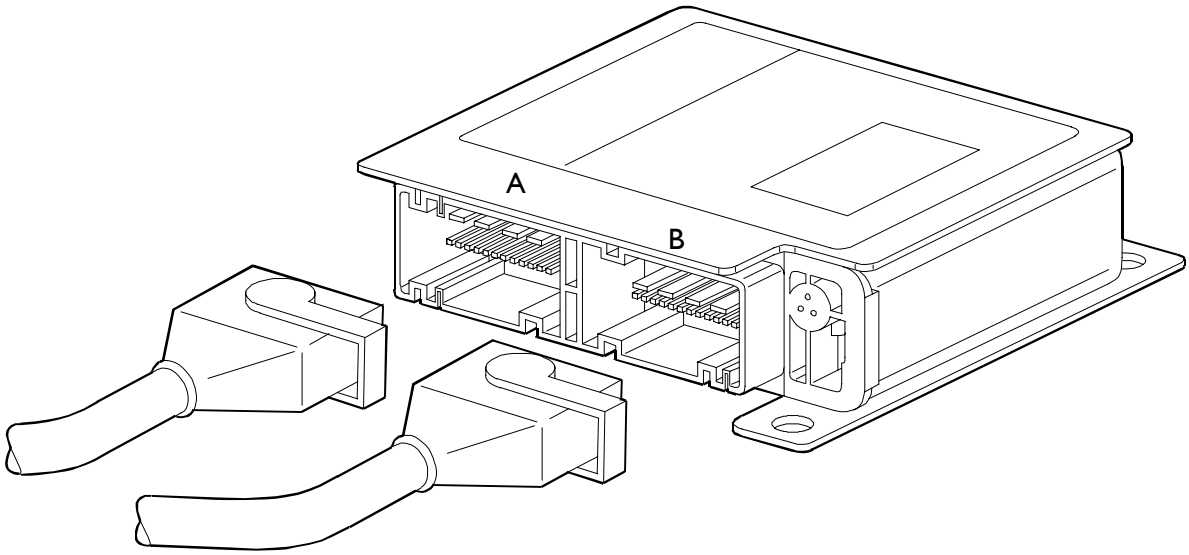

73792

IV.131 PERSPECTIVE VIEW OF THE ELECTRONIC CONTROL UNIT WITH TWO CONNECTORS
A. BLACK - **B.** GREY

ECU pin-out to the two connectors

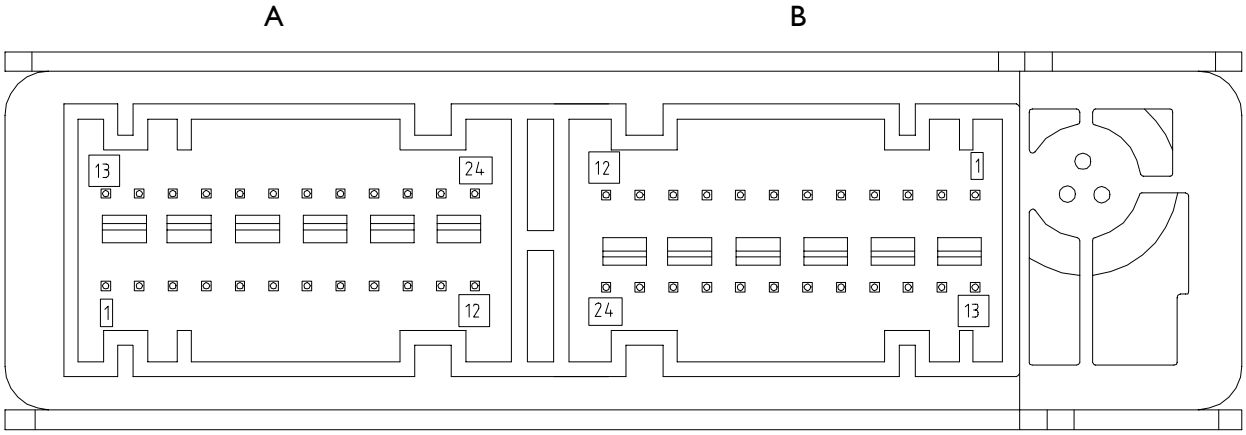

73791

GREY CONNECTOR (A)		BLACK CONNECTOR (B)	
Pin	Function	Pin	Function
1	Ground	1	-
2	+15 power supply	2	-
3	K-line for diagnosis	3	-
4	-	4	-
5	-	5	-
6	-	6	-
7	-	7	-
8	-	8	-
9	-	9	-
10	Warning lamp	10	-
11	-	11	-
12	-	12	-
13	-	13	Driver side pre-tensioner positive
14	-	14	Driver side pre-tensioner negative
15	-	15	Front passenger seat pre-tensioner negative
16	-	16	Front passenger seat pre-tensioner positive
17	-	17	-
18	-	18	-
19	-	19	-
20	-	20	-
21	Driver front AIR-BAG positive	21	Front center pre-tensioner positive
22	Driver front AIR-BAG negative	22	Front center pre-tensioner negative
23	Passenger front AIR-BAG negative	23	-
24	Passenger front AIR-BAG positive	24	-

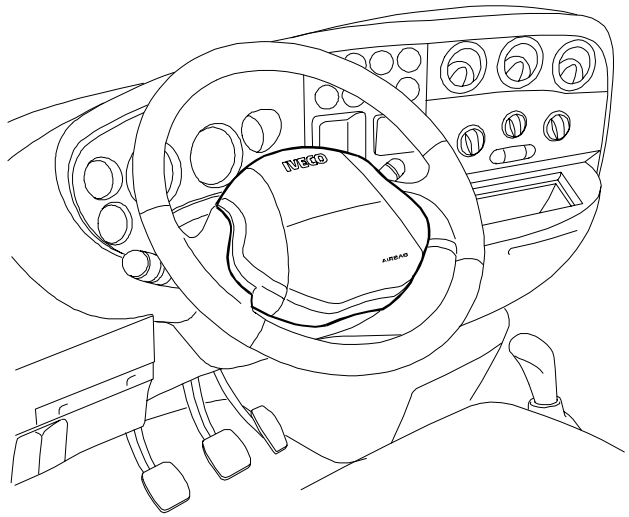

IV.132 AIR BAG MODULE 8557

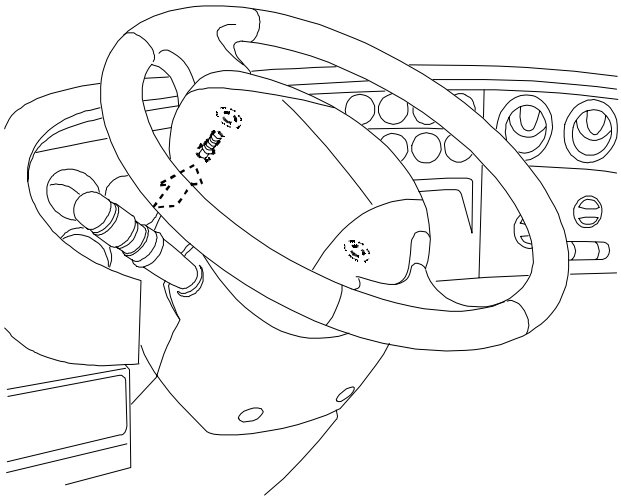

IV.133 AIR BAG MODULE FASTENING SCREWS 8558

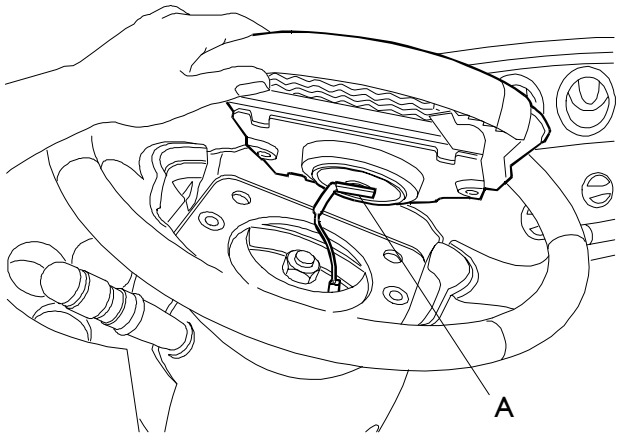

8559

IV.134 AIR BAG MODULE REMOVAL
A. CONNECTOR

Drivers air bag module

The module (Fig. IV.132) is at the centre of the steering wheel.

It mainly comprises the following:

- a bag inflation device, containing the triggering device and the explosive charge
- a synthetic fibre bag, folded in a special wrapping
- a plastic cover which at the centre and sides has pre-established splitting lines which allow the bag out.
- A plate that fastens the module to the steering wheel with two screws

Inflation of the bag takes place through the pre-established controlled expansion of the volume of inert harmless gas (ARGON), contained in a special module, after the heating caused by a charge of solid propellant.

The rear part of the bag has suitably-sized holes which deflate the bag immediately after inflation.

To remove the air bag module, proceed as follows:

follow the rules of safety given on page IV.89 and the ones that follow

- disconnect the battery cables (firstly the negative one then the positive) and isolate them taping the terminals (Fig. IV.127);
- wait at least ten minutes before proceeding;
- slacken the two screws in the rear part of the steering wheel; to gain access to each screw, turn the steering wheel to be able to always work from the part of the upper steering column cover (Fig. IV.132);
- lift the module enough to disconnect the connector in its centre (ref. A, Fig. IV.134);
- remove the module from the steering wheel.

After removal undeployed air bags must be stored in a special, key-lockable cabinet with the plate rested on the shelf.

Clock spring

The clock spring is a device fitted on the stalk unit ensuring electrical continuity between the driver's module and the air bag cable; it is formed of a container from which two cables lead. One is connected to the air bag cable and one to the driver's module. The container is composed of two overlaid plates; the lower one is fastened to the stalk unit by three screws and the upper one is made integral with the steering wheel through two appendixes on its upper section.

Inside the two plates, the connection cables are wound in a coil to be able to allow the cables to follow the movements of the steering wheel, The clock spring also has a mechanism that automatically prevents it from turning when it is removed from the steering wheel; this consists in preventing the upper plate, no longer restrained, from turning freely causing unwinding or winding of the cables, with the possibility of breakage.

When the steering wheel is assembled the device locks automatically.

To remove the clock spring, proceed as follows:

- remove the driver's air bag module as described on the previous page
- align the wheels and keep them in this position throughout the whole operation
- slacken the nut fastening the steering wheel to the steering column (Fig. IV.135)
- still with the wheels aligned, mark the position between the steering wheel hub and the steering column (Fig. IV.136)
- remove the steering wheel taking care not to withdraw the clock spring cable (Fig. IV.137)

Make sure that removing the steering wheel cause the upper plate of the clock spring to raise. If the upper plate turns, it must be locked taking it outwards; a click will be heard during locking.

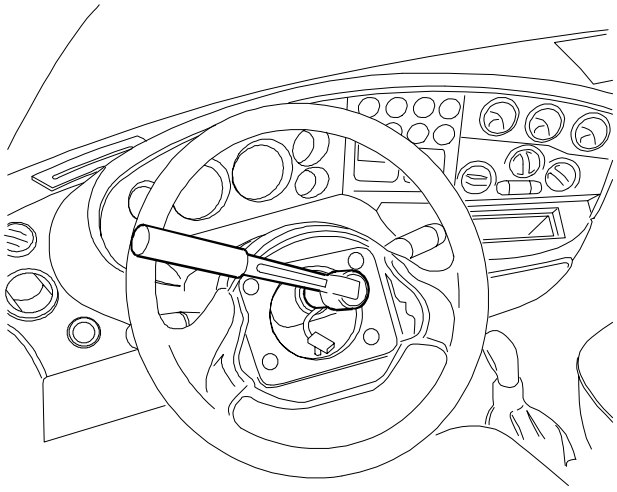

8560

IV.135 REMOVING THE STEERING WHEEL FASTENING NUTS

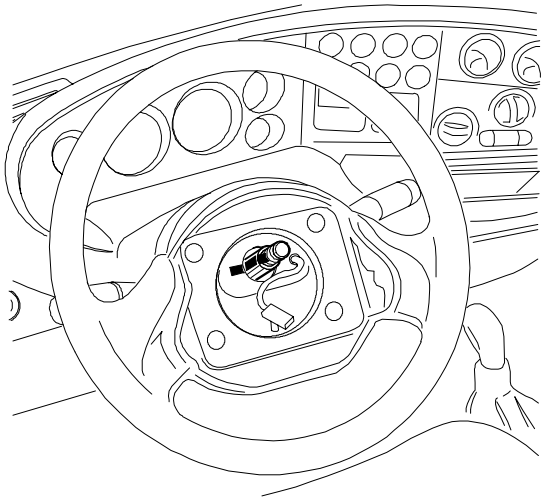

8561

IV.136 REFERENCE BETWEEN STEERING WHEEL HUB AND STEERING COLUMN

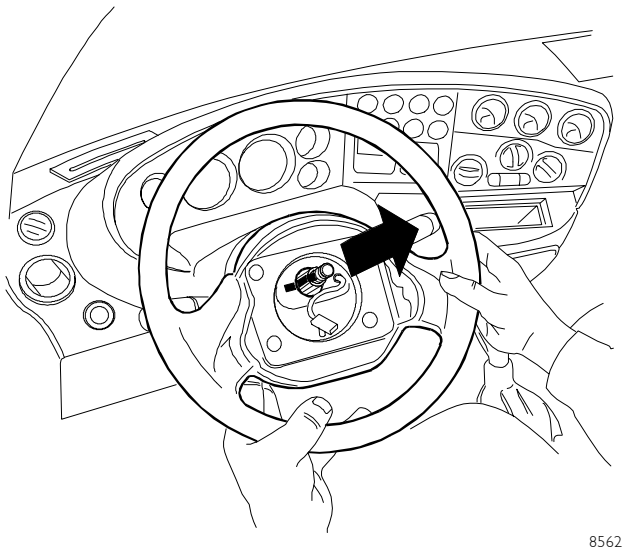

8562

IV.137 REMOVING THE STEERING WHEEL

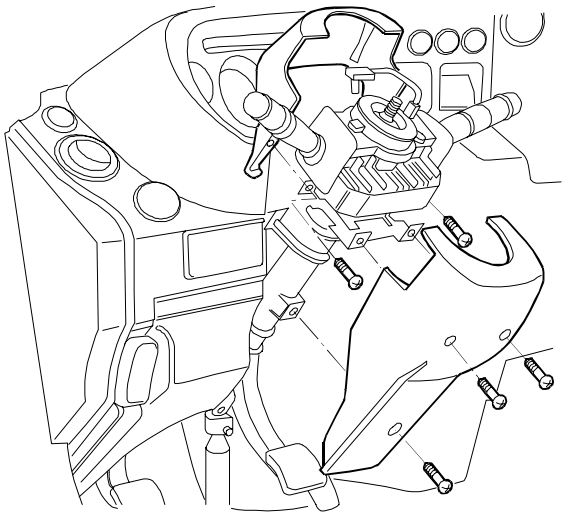

8563

IV.138 REMOVING THE STEERING COLUMN COVER HALVES

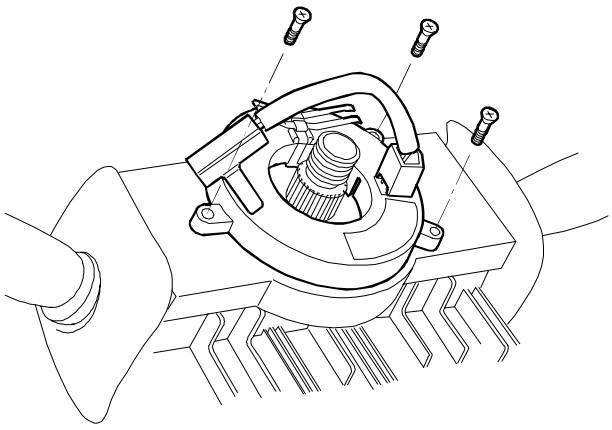

8564

IV.139 REMOVING THE CLOCK SPRING

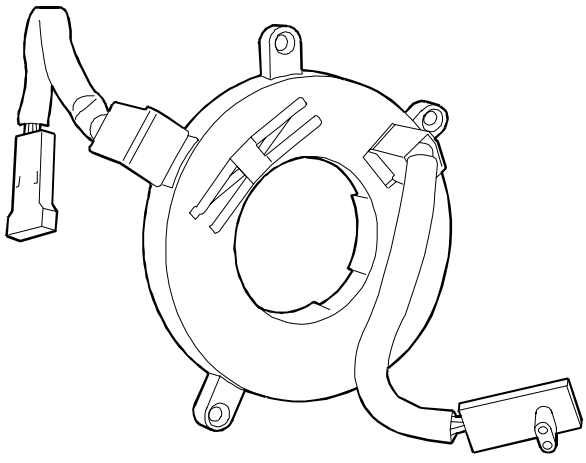

8565

IV.140 CLOCK SPRING

– remove the steering column lower half cover slackening the three fastening screws (Fig. IV.138)
– working from inside, remove the upper steering column half cover slackening the two fastening screws
– cut the strap that fastens the clock spring cable to the steering column and disconnect the connector of this cable from the air bag cable
– slacken the three screws fastening the clock spring to the stalk unit and remove it (Fig. IV.139).

It is necessary to remove the clock spring without making it turn, holding the upper plate in place with a strap or adhesive tape.

To refit the clock spring, proceed as follows:

– make sure the wheels are aligned
– if replacement of the clock spring is not necessary, refit it, after removing the adhesive tape or strap put on previously, without making the upper plate turn, then tighten the three fastening screws
– in the case of fitting a new clock device, after fastening it to the stalk unit, tear the plastic tab to lock the upper plate and check that it does not turn
– connect the air bag cable connector to the clock spring cable and fasten the latter to the steering column using a suitable clamp
– assemble the two steering column halves fastening them on the support plate with their screws
– carefully insert the cable to be connected to the driver's air bag module through the slot provided on the steering wheel hub
– assemble the steering wheel making the reference marks made previously coincide.
– Tighten the steering wheel fastening nut to the specified torque.

Do not re-use the steering wheel fastening nut removed previously, replace it with a new one and caulk it.

NB If the stalk unit is changed it must be replaced by one inclusive of the clock spring.

Passenger's air bag module

This module is fitted on the dashboard (Fig. IV.141) and it is fastened on the body by a special bracket; the operating principle is the same as for the driver's module, only the size of the bag differs, as it has to protect two people.

To remove the air bag module, proceed as follows:

- follow the rules of safety given on page IV.89 and the ones that follow
- disconnect the battery cables (firstly the negative one then the positive) and isolate them taping the terminals (Fig. IV.127)
- wait at least ten minutes before proceeding
- slacken the two screws fastening the dashboard cover (Fig. IV.142)
- remove the dashboard cover in such a way as to overcome the resistance of the snap button in the lower part of the cover
- disconnect the module cable connector from the air bag cable
- slacken the four screws (Fig. IV.143), two on either side, that fasten the module support bracket to the body and remove it.

NB If the passenger's air bag is not fitted as it is optional, a specific resistance is fitted on the connector during production to simulate the charge (R = 2.15 Ohm ± 0.35)

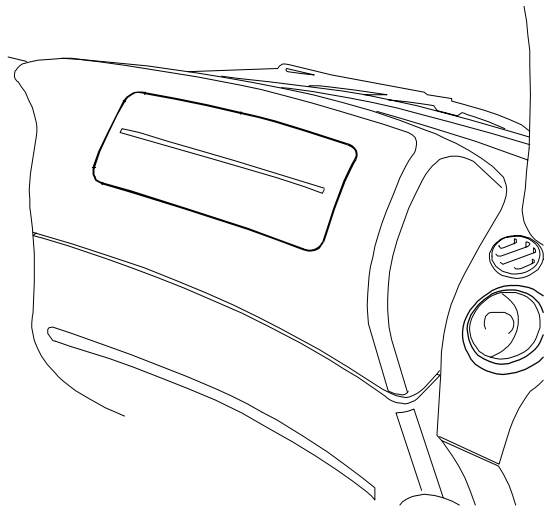

8553

IV.141 PASSENGER'S AIR BAG MODULE

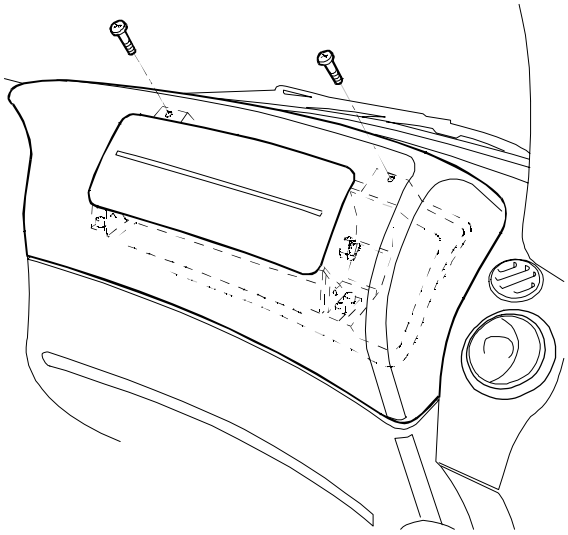

8554

IV.142 REMOVING THE DASHBOARD COVER

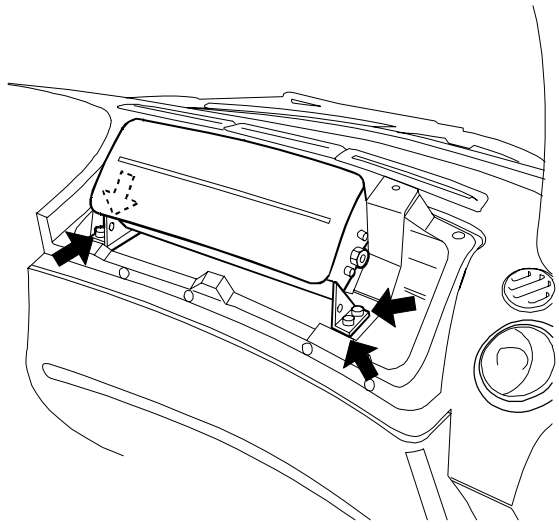

8555

IV.143 REMOVING THE AIR BAG MODULE

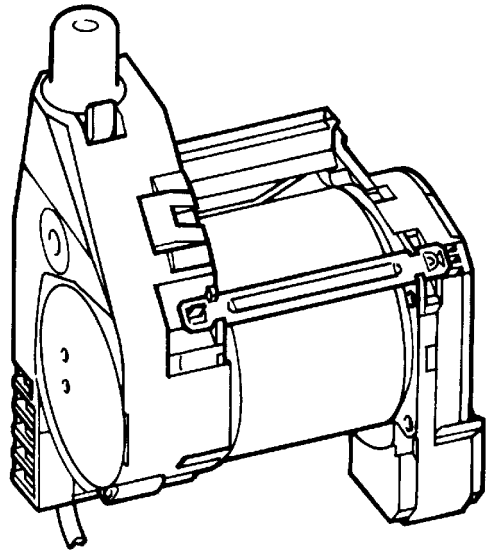

IV.144 REEL WITH PRETENSIONER

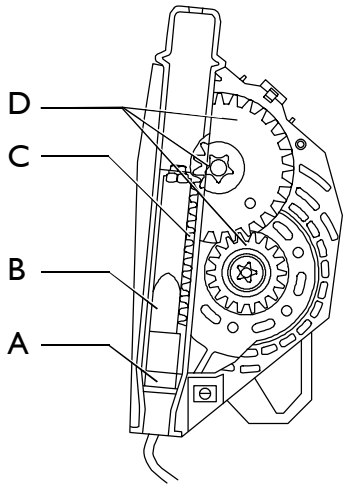

IV.145 TECHNICAL VIEW OF REEL WITH PRETENSIONER BEFORE DEPLOYMENT
A. EXPLOSIVE CHARGE - **B.** PROPELLANT - **C.** RACK AND PINION PISTON - **D.** GEARS

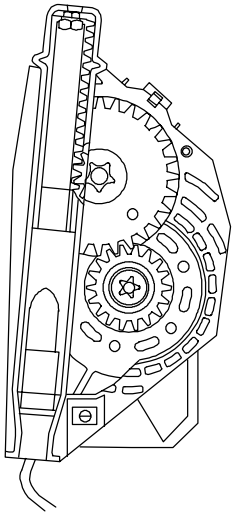

IV.146 TECHNICAL VIEW OF REEL WITH PRETENSIONER AFTER DEPLOYMENT

Pretensioners

The pretensioner is an explosive device activated electrically with a signal leading from the electronic control unit; it is an integral part of the seat belt reel (Fig. IV.144) and forms a single component with it which is fastened to the vehicle pillar. It comes into action in the event of a crash of a certain entity, in order to take up the unavoidable slack in the seat belts due to the action of the weight of the body, keeping the body close to the seat back.

After cutting in the belt remains locked meaning that the device has been triggered.

Operating principle

The moment in which a determinate deceleration of the vehicle takes place, the electronic sensor in the control unit sends a signal which ignites the explosive charge (ref. A Fig. IV.145) of the gas generator (detonator).

The combustion of the propellant (ref. B, Fig. IV.145) develops a gas, the pressure of which generates a force that pushes the rack and pinion piston (ref. C, Fig. IV.145) upwards.

The upward movement of the piston makes the gears turn (ref. D. Fig. IV.145) which reverse the direction of rotation of the belt rewinding it a few centimetres.

NB The belt is unserviceable after every crash and needs to be changed.

– The charge for the driver's pretensioner is connected to the control unit on pins 1/2.
– The charge for the passenger's pretensioner is connected to the control unit on pins 3/4.
– The charge for the centre pretensioner is connected to the control unit on pins 16/17.

Driver's/passenger's pretensioner

Do not use percussion screwing machines for the following operations on active pretensioners.

To remove the driver's or passenger's reel with pretensioner, proceed as follows:

- follow the rules of safety given on page IV.89 and the ones that follow
- disconnect the battery cables (firstly the negative one then the positive) and isolate them taping the terminals (Fig. IV.127)
- wait at least ten minutes before proceeding
- slacken the screw fastening the tool kit under the seat
- slacken the seat fastening screw and remove it
- slacken the two screws fastening the step to the door pillar base (Fig. IV.147)
- partially remove the door weatherstrip (Fig. IV.148)
- slacken the screw fastening the seat belt (Fig. IV.148)
- remove the lower pillar trim overcoming the resistance of the two snap buttons in the upper part of the trim
- disconnect the pretensioner connector from the air bag cable (ref. A, Fig. IV.149)
- connect the specific resistance on the air bag cable to simulate the presence of the pretensioner; this is to prevent the control unit from signalling a failure on the system that does not exist if the ignition switch is inadvertently turned to AVV or MAR.
- slacken the reel fastening screw (ref. B, Fig. IV.149) and remove the reel.

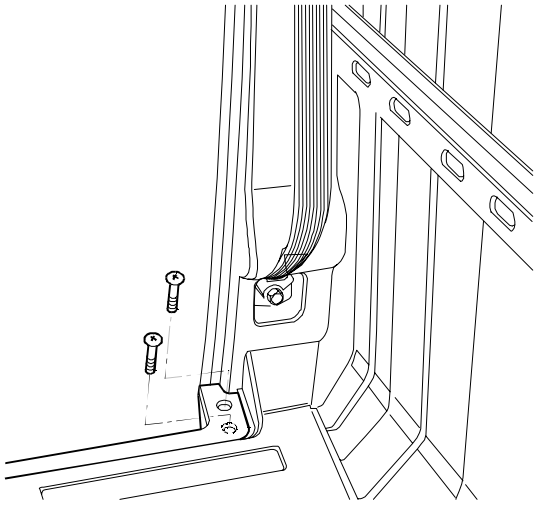

8550

IV.147 STEP FASTENING SCREW

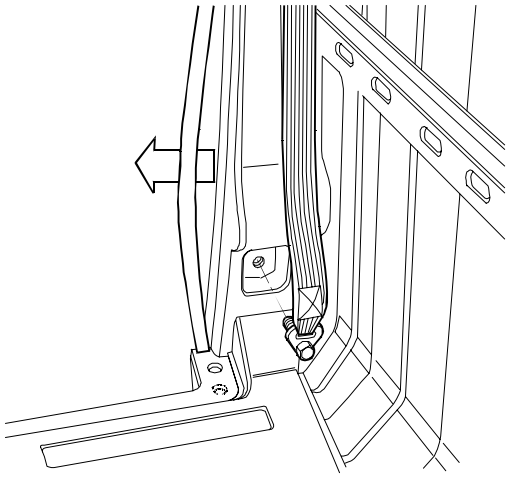

8551

IV.148 REMOVING THE WEATHERSTRIP AND BELT FROM THE PILLAR

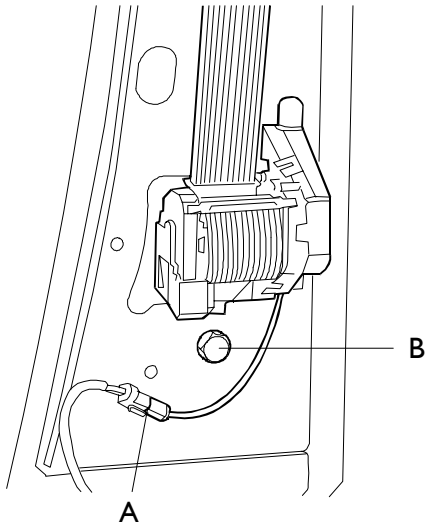

8552

IV.149 REMOVING THE REEL WITH PRETENSIONER
A. CONNECTOR - **B.** FASTENING SCREW

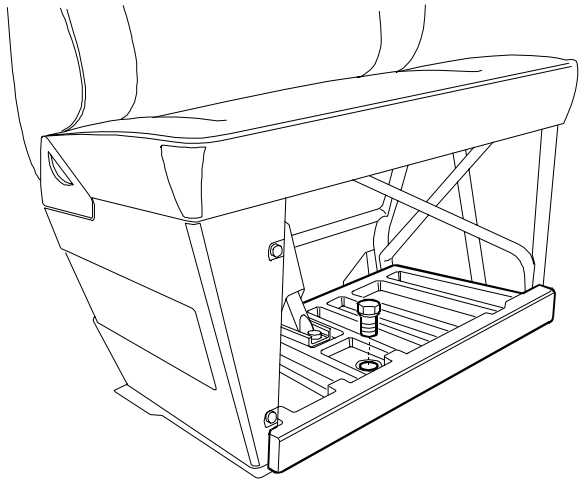

8566

IV.150 REMOVING THE TOOL KIT

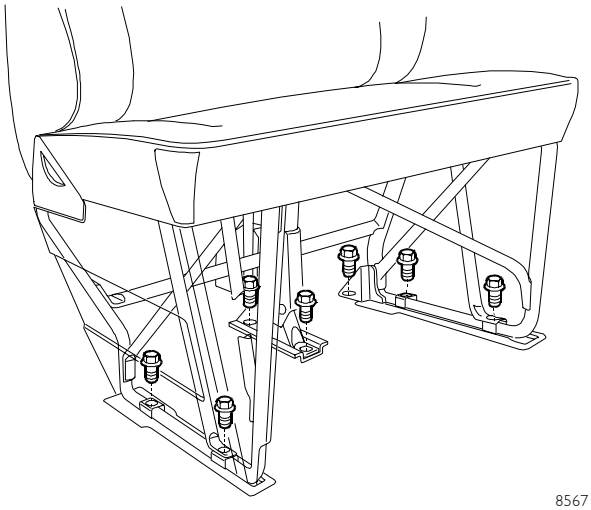

8567

IV.151 REMOVING THE SEAT

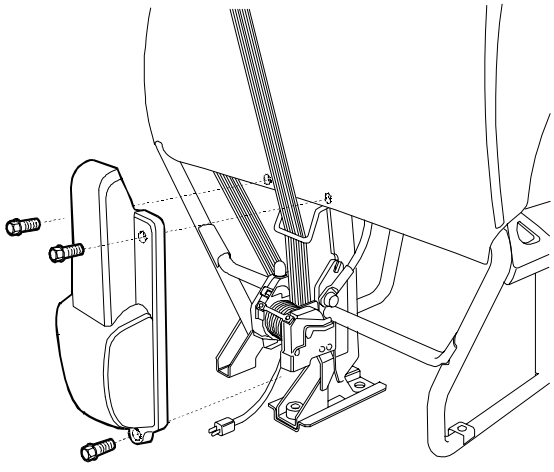

8568

IV.152 REMOVING THE GUARD

Centre passenger's pretensioner

Do not use percussion screwing machines for the following operations on active pretensioners.

The centre passenger's reel with pretensioner has the same operating principle as the other two reels. To remove it proceed as follows:

- follow the rules of safety given on page IV.89 and the ones that follow
- disconnect the battery cables (firstly the negative one then the positive) and isolate them taping the terminals (Fig. IV.127)
- wait at least ten minutes before proceeding
- slacken the screw fastening the tool kit under the seat (Fig. IV.150)
- slacken the seven screws fastening the seat (Fig. IV.151)
- disconnect the pretensioner connector from the air bag cable
- remove the seat
- connect the specific resistance on the air bag cable to simulate the presence of the pretensioner; this is to prevent the control unit from signalling a failure on the system that does not exist if the ignition switch is inadvertently turned to AVV or MAR.
- slacken the three screws fastening the guard on the rear part of the seat (Fig. IV.152)
- remove the guard
- slacken the reel and belt fastening screw, then remove the reel with pretensioner (Fig. IV.153).

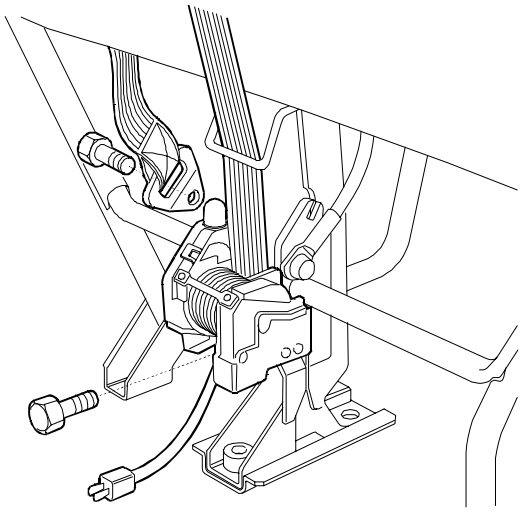

8569

IV.153 REMOVING THE REEL WITH PRETENSIONER

SYSTEM DIAGNOSTICS

Each time the engine is started the control unit turns on the warning light for approx. 4 seconds running system self-diagnostics.

If a fault is detected the electronic control unit memorises the error and turns the warning light on permanently.

After each system activation the control unit keeps the failure warning light on on the instrument cluster and it will be absolutely necessary to change the whole system (control unit, belts and pretensioners, bags and harness).

Diagnostics through Modus

Use adapter 99331043 (A).

Diagnostics through I.W.T.

Use adapter 99331043 (A).

During diagnostics for fault-finding use the kit of resistance 99376011.

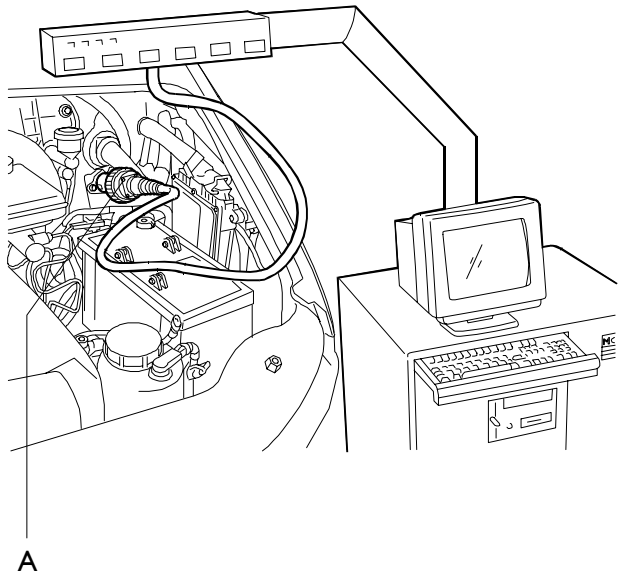

IV.154 DIAGNOSTICS THROUGH MODUS

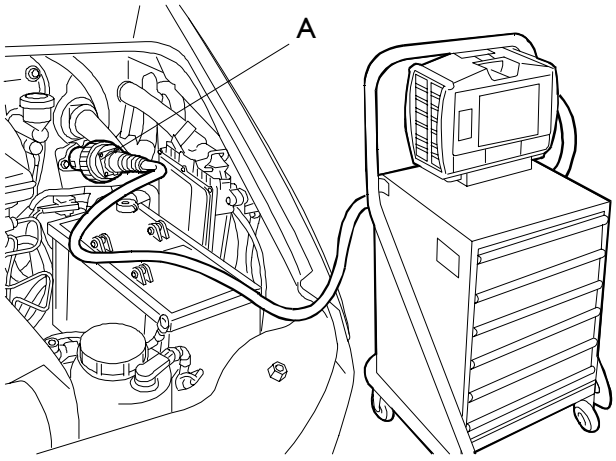

IV.155 DIAGNOSTICS THROUGH IWT

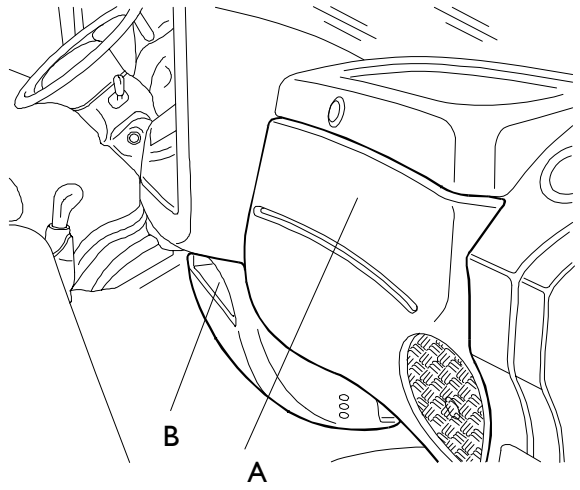

8670

IV.156 LOWER DASHBOARD SNAP-FITTED PANEL

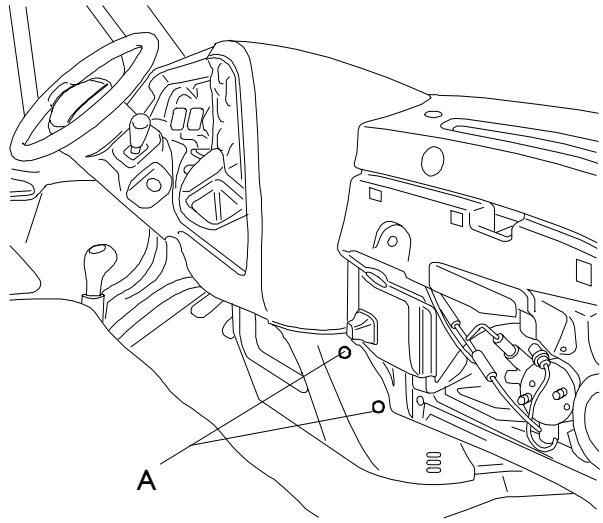

8781

IV.157 LOWER PANEL FASTENING SCREWS

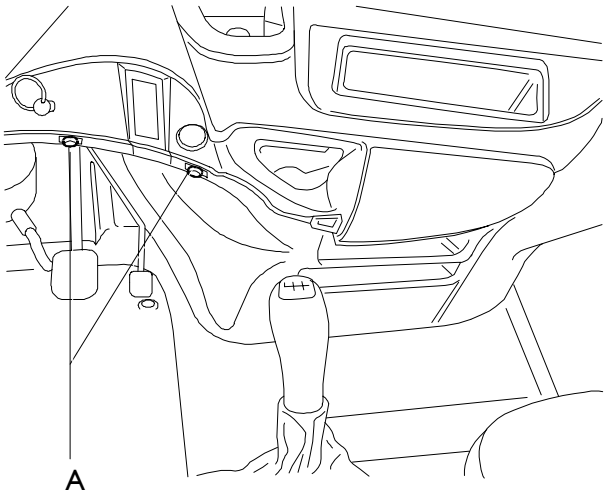

8782

IV.158 LOWER PANEL FASTENING SCREWS

ELECTRONIC TACHOGRAPH INSTALLATION

Removing the lower dashboard cover

– Remove the snap-fitted panel (Ref. A, fig. IV.156) to gain access to the panel fastening screws (Ref. B)

– Slacken the 4 fastening screws, two on either side, of the lower panel (Ref. A, fig. IV.157- IV.158)

Electronic tachograph control unit housing assembly

Fasten the control unit to the support, insert the 3 connectors, eliminating the bridges between the connectors (white, yellow and brown) and apply the seals (ref. A, fig. IV.159).

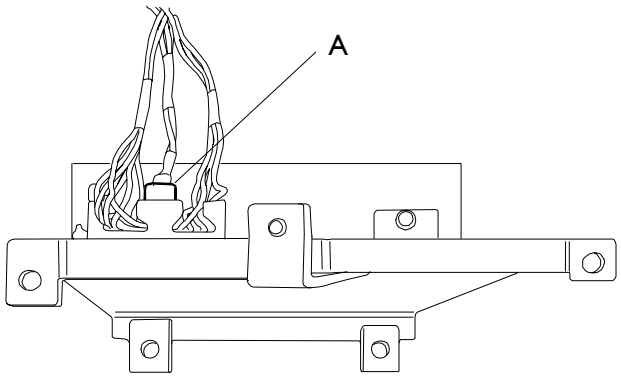

8783

IV.159 CONNECTIONS AND TACHOGRAPH CONTROL UNIT SUPPORT

ASSEMBLING THE TACHOGRAPH CONTROL UNIT SUPPORT ON THE DASHBOARD

Use the six screws (Fig. IV.162) to fasten the tachograph control unit support to the dashboard.

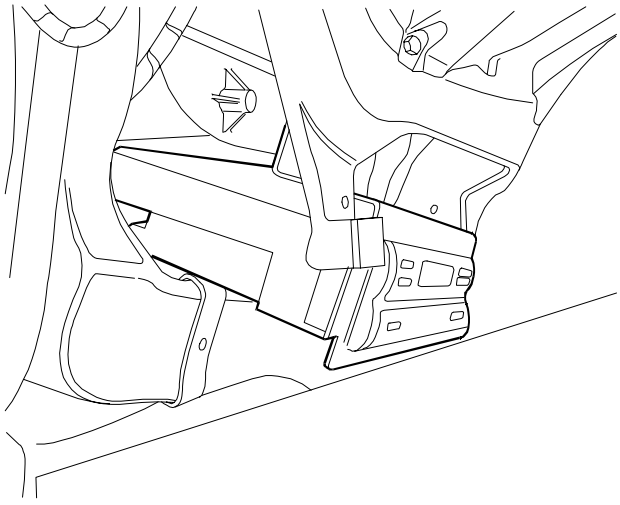

8784

IV.160 TACHOGRAPH CONTROL UNIT

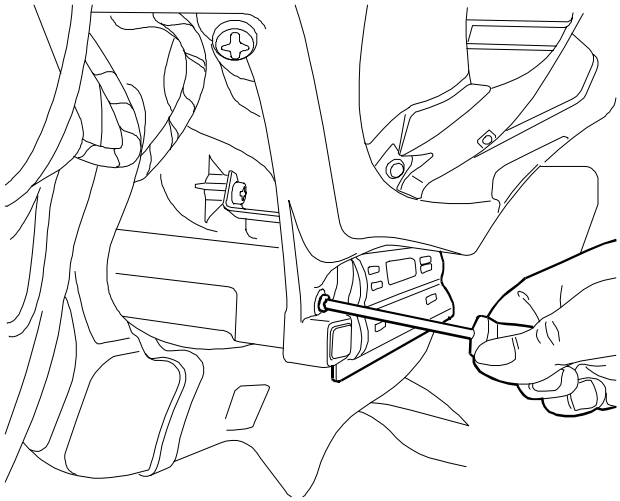

8785

IV.161 TACHOGRAPH CONTROL UNIT FASTENING TO DASHBOARD

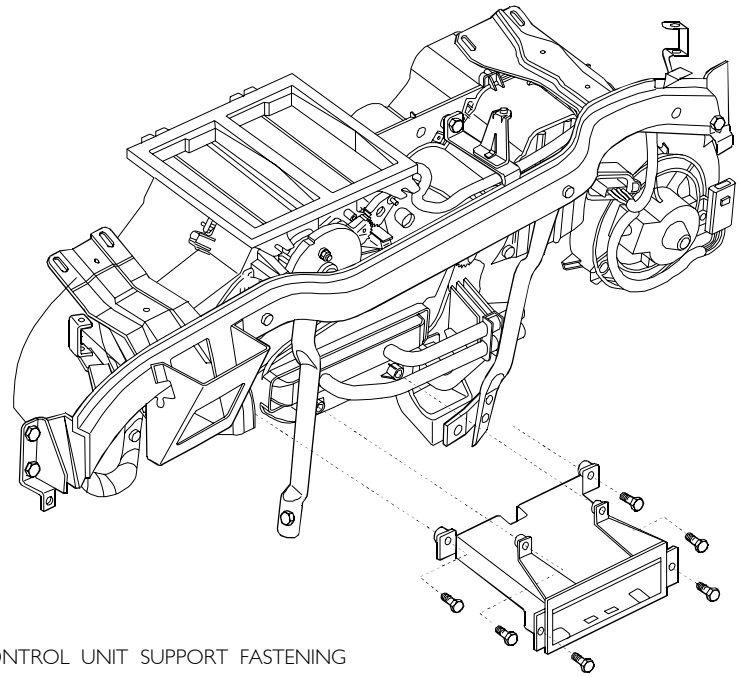

8786

IV.162 TACHOGRAPH CONTROL UNIT SUPPORT FASTENING SCREWS

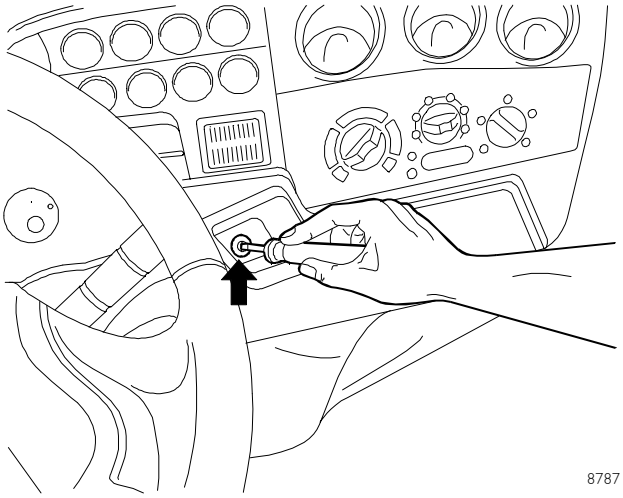

IV.163 UPPER TRIM FASTENING SCREW

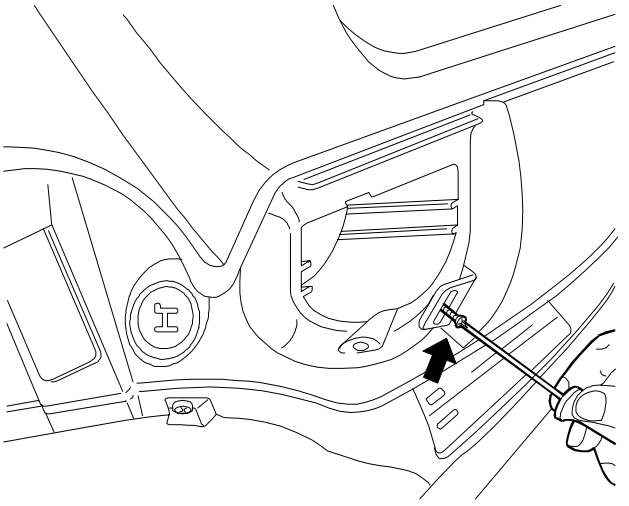

IV.164 UPPER TRIM FASTENING SCREW

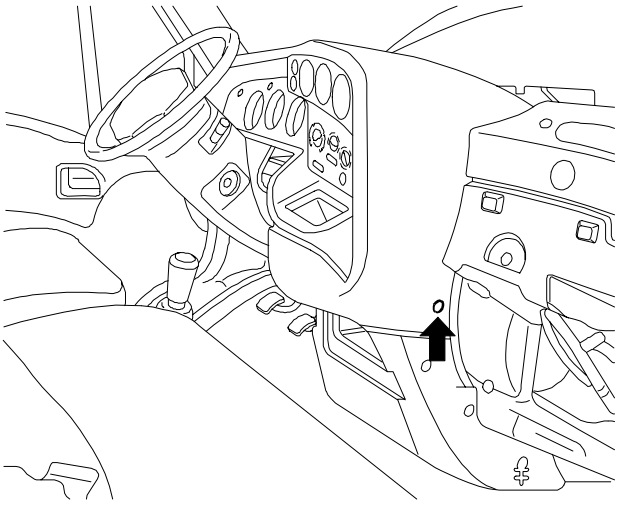

IV.165 UPPER TRIM FASTENING SCREW

Removing the instrument cluster module

To replace the module, proceed as follows:

1. Remove the upper trim working on the three screws shown by the arrows in Fig. IV.163, IV.164, IV.165.

2. Lift and remove the trim (Fig. IV.166) taking care not to damage the velcro stoppers.

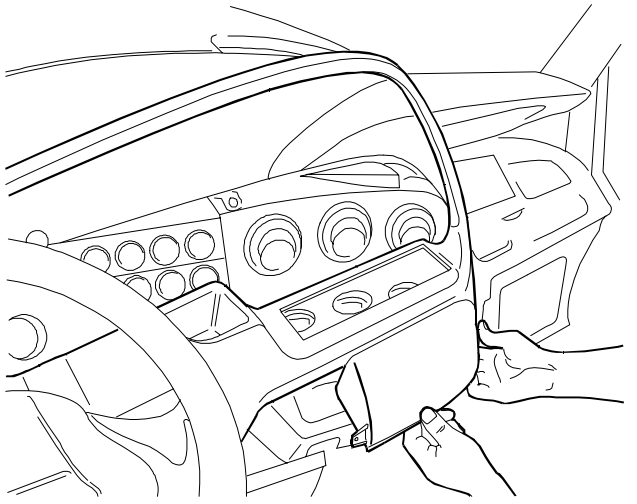

IV.166 TRIM REMOVAL

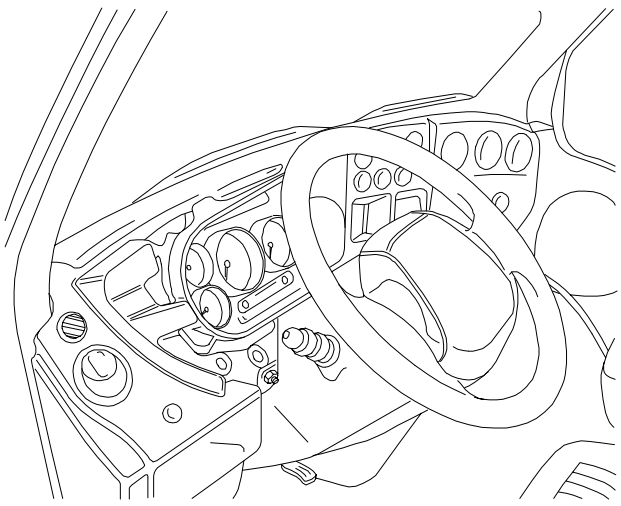

IV.167 INSTRUMENT CLUSTER

Work on the 4 screws, 2 on either side, to remove the cluster module with tachometer.

Disconnect the electrical connections (Fig. IV.170) and replace with the module for tachograph sealing the electrical connections concerning the wiring for tachograph.

Fasten the instrument cluster to the dashboard and refit the upper and lower trim.

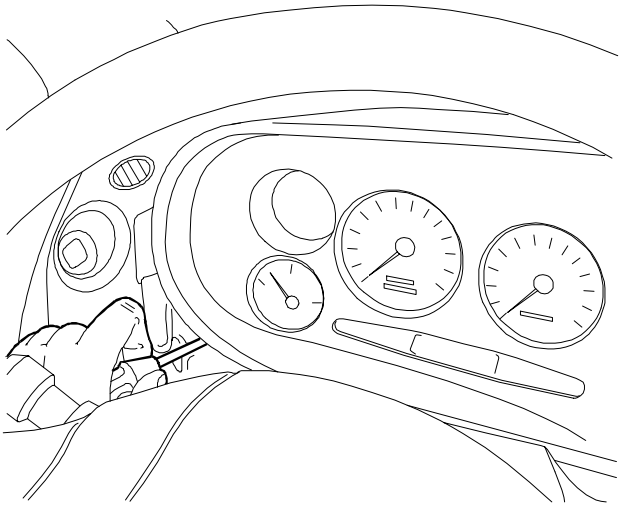

8792

IV.168 INSTRUMENT CLUSTER FASTENING

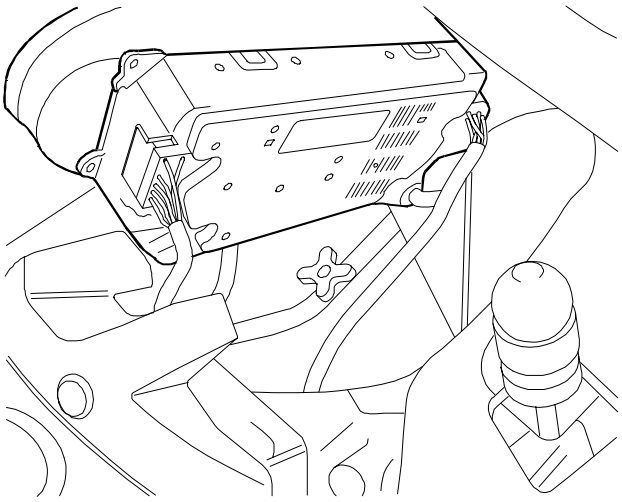

8793

IV.169 REMOVING THE INSTRUMENT CLUSTER

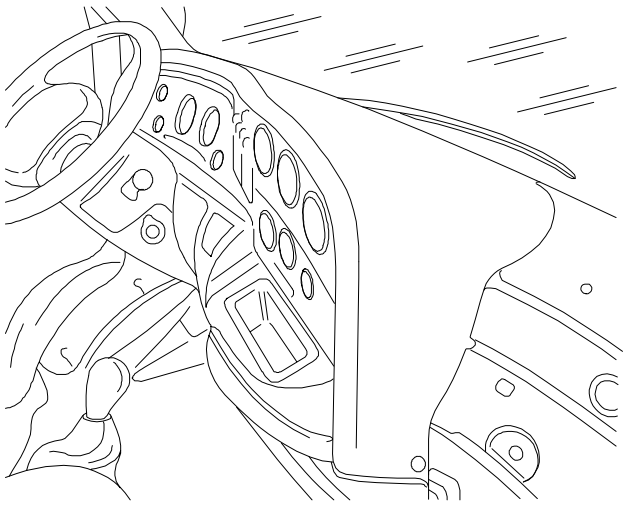

8795

IV.171 COMPLETE INSTRUMENT CLUSTER

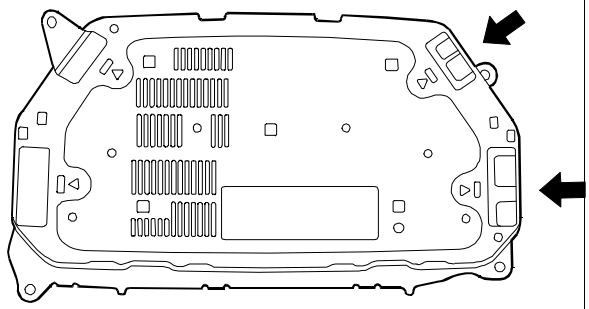

8794

IV.170 CONNECTIONS CONCERNING WIRING FOR TACHOGRAPH

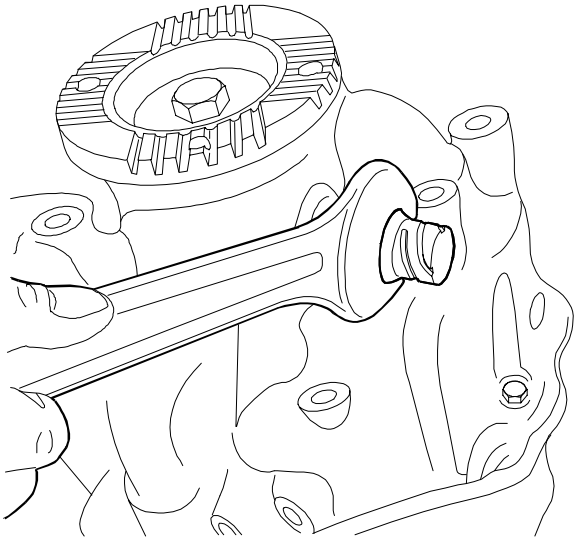

8796

IV.172 SENSOR REPLACEMENT ON GEARBOX

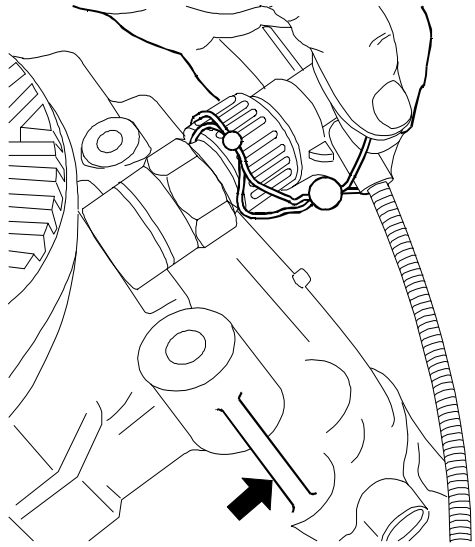

8797

IV.173 CONNECTION OF SENSOR TO WIRING

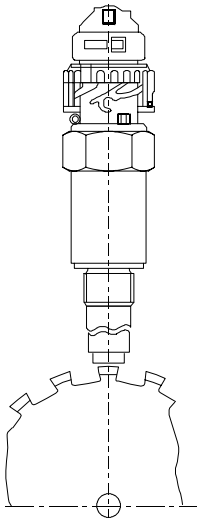

8798

IV.174 SENSOR TECHNICAL VIEW

Operations on gearbox

1. Replace the sensor on the gearbox with a suitable one for tachograph (Fig. IV.172).

2. Seal with lead the electrical connection to the sensor and to the gearbox body (Fig. IV.173).

If necessary, drill (4 mm) the ribbing on the gearbox see arrow in (Fig. IV.173) for passing the wire.

Operation in bonnet

1. Disconnect the terminals of the power cables from the battery terminals.

2. Remove the battery from the engine compartment, after removing the fastening bracket.

3. Seal the connector between the frame and cab/bonnet cables with sealing wire (Fig. IV.175).

4. Refit the battery, re-connect the terminals to the battery terminals, ensuring correct polarity and calibrate the tachograph using the special VDO tool.

5. In the front part, seal the tachograph control unit with the special red plug as shown in fig. IV.176.

6. Apply the labels; on the driver's door and on the tilting plate of the tachograph control unit.

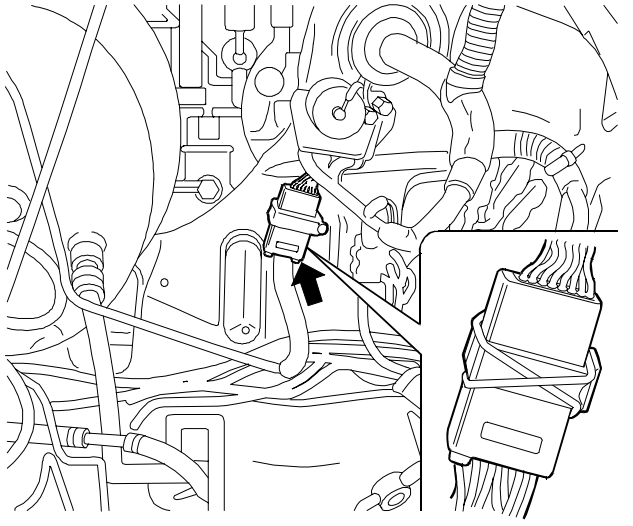

8799

IV.175 CONNECTOR BETWEEN CAB/BONNET AND FRAME CABLES

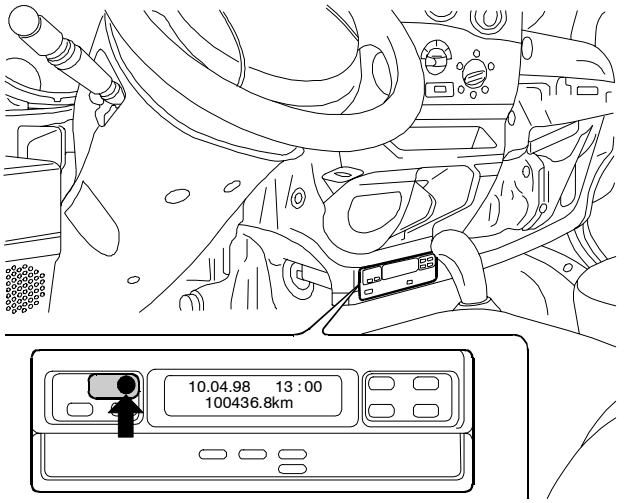

8800

IV.176 FRONT VIEW OF TACHOGRAPH CONTROL UNIT

DOOR-BLOCKER WITH ANTI-THEFT PROTECTION

General information

The anti-theft protection is supplied with the door-blocker and consists of the following:

- a warning siren
- an (ultrasonic) electronic module for volumetric detection, including a LED for signalling that the anti-theft protection is ON
- an electronic central control unit (ECU) for the anti-theft/door-blocker, 433.92 MHz for the European market
- two remote-control keys.

When the anti-theft protection is activated/de-activated by means of the remote-control key, the doors (driver's and passenger's doors and, for the van version, the side and rear doors) of the vehicle close/open simultaneously.

To complete the system, in addition to the components already mentioned above there are the following:

- switches and motors for closing/opening the doors.
- switch for signalling that the bonnet is being opened.
- switch on a switchboard for locking the rear door.

In addition, the electronic central control unit is connected to the immobiliser control unit, to the direction indicator switch (indicator flashing lights) and to the 38-pin diagnostics connector (cell 12).

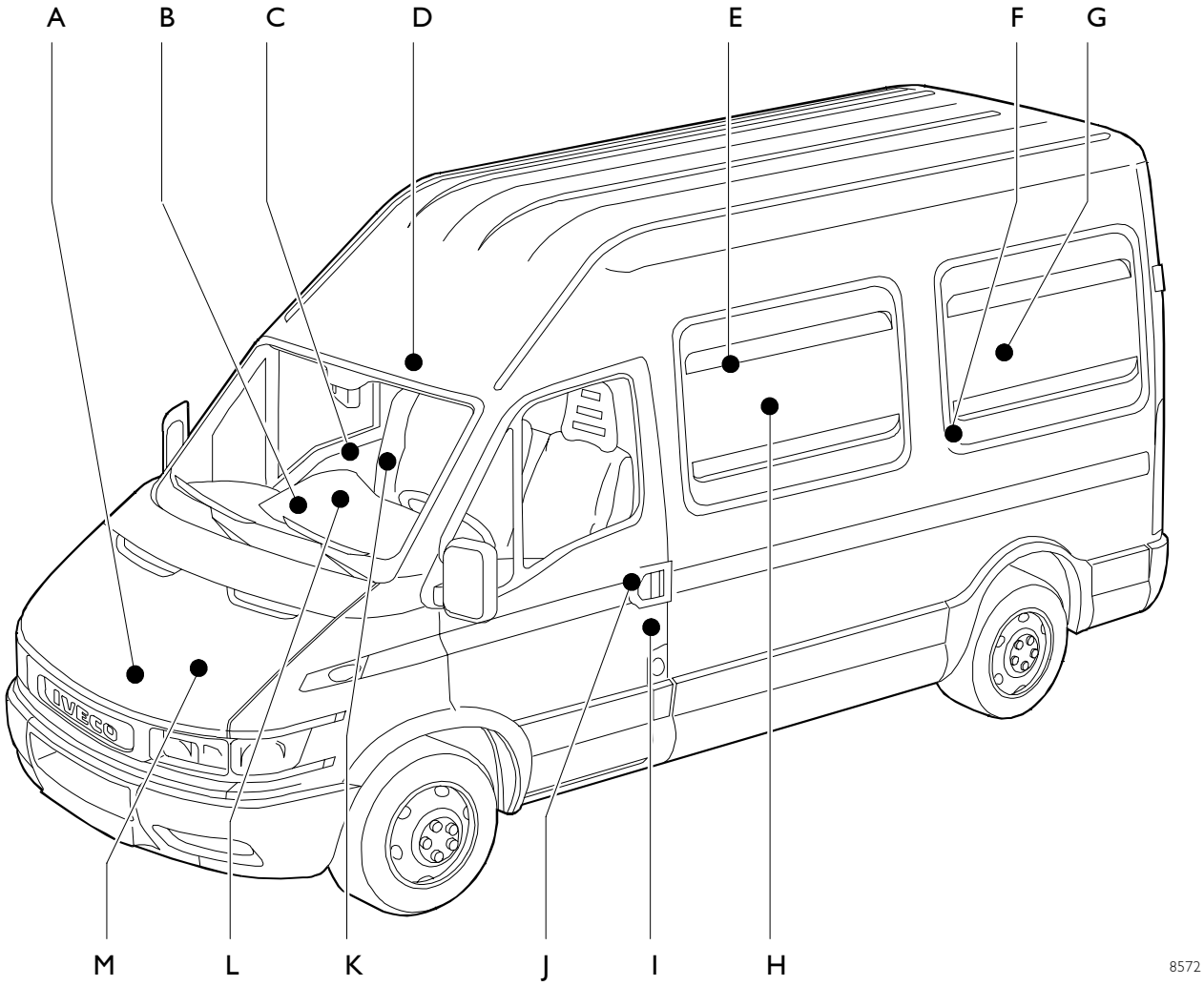

IV.177 LOCATION OF COMPONENTS:

A. SWITCH FOR SIGNALLING OPENING OF THE BONNET - **B.** ELECTRONIC CENTRAL CONTROL UNIT (ECU) - **C.** MOTOR FOR CLOSING/OPENING THE LOCK ON THE PASSENGER-SIDE DOOR. - **D.** ELECTRONIC MODULE FOR VOLUMETRIC DETECTION AND LED FOR SIGNALLING THAT THE ANTI-THEFT PROTECTION IS ON. - **E.** MOTOR FOR CLOSING/OPENING LOCK ON RIGHT-HAND SIDE DOOR. - **F.** SWITCH FOR SIGNALLING OPENING OF REAR DOOR. - **G.** MOTOR FOR CLOSING/OPENING LOCK ON REAR DOOR. - **H.** SWITCH FOR SIGNALLING OPENING OF RIGHT-HAND SIDE DOOR. - **I.** SWITCH FOR SIGNALLING OPENING OF DOOR ON DRIVER'S SIDE. - **J.** MOTOR FOR CLOSING/OPENING LOCK OF DOOR ON DRIVER'S SIDE. - **K.** SWITCH FOR SIGNALLING OPENING OF DOOR ON PASSENGER'S SIDE. - **L.** SWITCH FOR BLOCKING REAR DOOR - **M.** SELF-POWERED SIREN.

System components

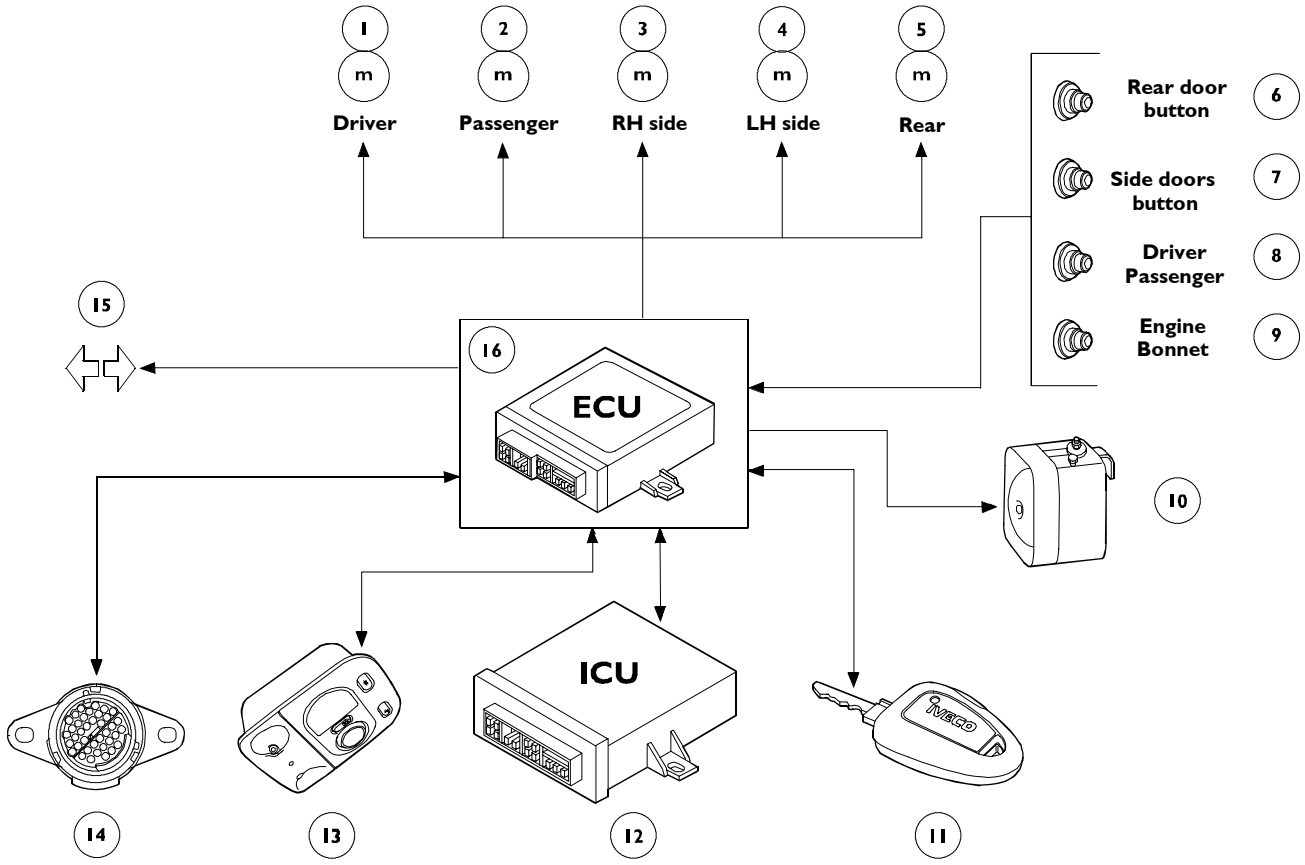

50288

Ref.	Function
1	Driver door lock/release motor
2	Passenger lock/release motor
3	RH door lock/release motor
4	LH door lock/release motor
5	Rear door lock/release motor
6	Rear door button
7	Side doors button
8	Driver/passenger doors button
9	Engine bonnet button
10	Siren
11	Remote control key
12	Injection system control unit
13	Volumetric detector electronic module
14	Tester connector
15	Direction indicator telltale
16	Electronic control unit

Operation

When the push-button on the remote-control key is activated, this is signalled by the LED on the key itself, and a radio-frequency (RF) signal is sent to the ECU. This signal controls closing of the doors by means of the motors, activates the volumetric sensor installed in the ceiling-lamp inside the cab and signals that the anti-theft protection has been activated by causing the indicator flashing lights to flash twice and the "anti-theft activated" LED to flash once. About ten seconds pass between the time when the signal is sent to the ECU and when the system is actually active. During this period of time, the ECU checks that all the necessary conditions (state of the doors, inside of the cab) for activating the anti-theft protection are met. Once the 10 seconds have elapsed the system is active and is constantly checked by the ECU.

If the ECU does not find all the conditions required for correct activation of the system while it carries out the anti-theft activation procedure (for example, if one of the doors is not closed), the state of the door will not be checked during the system monitoring that the ECU carries out upon completion of the activation procedure. Once the door has been closed, this too will be checked by the ECU, starting ten seconds from the time when it was closed.

The conditions in which the anti-theft protection switches on are the following:

- if the driver's/passsenger's doors are opened
- if the rear door is opened
- if the bonnet is opened
- if the side door(s) is(are) opened
- if the engine is switched on
- if the volumetric detection module is activated.

If any of the above conditions occur, the sound of the self-powered siren and the flashing of the indicator flashing lights for five minutes will signal that the system has switched on.

In order to be able to open the doors and de-activate/switch off the anti-theft protection, it is necessary to press the push button on the remote-control key again. The ECU will de-activate the anti-theft protection. The indicator flashing lights will flash once and the signalling LED of the anti-theft protection will go off to confirm that it has been de-activated.

Arrangement of components

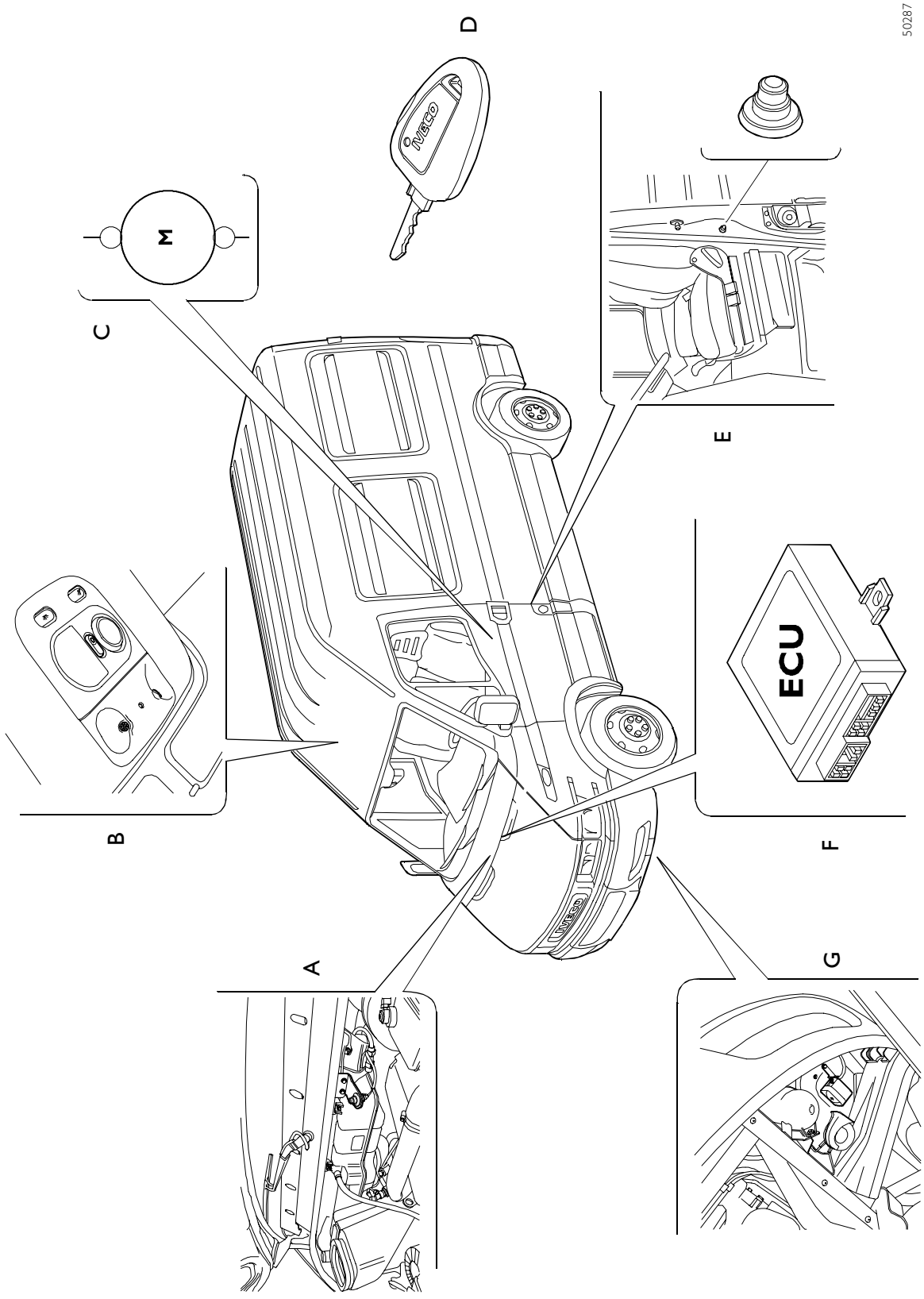

A. ENGINE BONNET SWITCH - **B.** VOLUMETRIC DETECTOR ELECTRONIC MODULE - **C.** DOOR LOCK MOTOR - **D.** REMOTE CONTROL KEY - **E.** DOOR SWITCH - **F.** ELECTRONIC CONTROL UNIT - **G.** SIREN

MAIN COMPONENTS OF THE SYSTEM

Remote-control key

The electronic device controlling the anti-theft protection with the door-blocker can be mounted in the grip of the key or in any suitable place for the remote-control function.

Features:

- transmission frequency 433.92 MHz
- transmission of combined code (fixed and variable)
- red LED for signalling transmission of the code
- 3V CR 2032 battery
- operation from -30 °C to +60 °C
- retention of the "rolling-code" data (variable part of the combined code) in the memory of the microprocessor in the key during replacement of the battery
- maximum power transmitted: 10 mW.

On pressing the push button in the key, all the doors will be opened or closed and the anti-theft protection will be activated or de-activated. The red LED on the key will flash to signal transmission of the radio-frequency code to the ECU. If the pushbutton is activated for a time exceeding 20 minutes, transmission of the code to the ECU will be broken off, in order to prevent the battery of the remote-control key from going dead due to accidental activation of the push button.

As already stated, the remote-control key transmits a combined code (fixed and variable). The fixed code that is transmitted is always the same for each individual key, while the second part changes each time the pushbutton is pressed.

The keys supplied are two. It is important that they should both follow the correct key-learning procedure by means of the IVECO diagnostic tools with the +15 power supply on. The indicator flashing lights will flash once to signal that the code has been received by the ECU.

If the remote-control key gets partly or totally damaged, with the +15 power supply on, the immobiliser will send a signal to the ECU to de-activate it.

If the exchange of data between the transponder and the engine management is successfully completed, the immobiliser will send a 500 msec ± 10 % message to the ECU. This signal will occur after 500 msec ± 10 % from when the +15 power supply is switched on. If it is not, that is to say if the immobiliser signal does not fall within the range of values indicated above, the ECU will switch on the anti-theft protection. The impulses generated by the immobiliser after repeated switching on of the +15 power supply will be ignored.

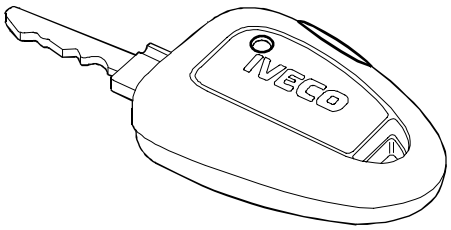

50286

Remote control key battery

The key supplied as standard contains a 3 volt type CR2032 lithium battery. Battery life is about one year, since Bosch guarantees it for 50,000 working cycles at a temperature of between -30 °C to + 60 °C.

Batteries from competing brands can be easily found on the market, but the Bosch warranty is not valid unless only PANASONIC batteries are used.

Replacing the battery

Battery replacement should not take longer than 3 minutes. When fitting the new battery pay attention to battery polarity.

If you fail to comply with the foregoing instructions the **ROLLING CODE** necessary to transmit the signal from the key to the control unit will be deleted.

The ROLLING CODE can be reset by following the **key synchronisation** procedure.

Key synchronisation procedure

- introduce the key into the switch
- turn it to start
- press the remote control button

This procedure makes it possible to reset the ROLLING CODE

Electronic central control unit (ECU)

The central control unit is located underneath the central dashboard. It controls both centralised closing/opening of the doors and activation/de-activation of the anti-theft protection by means of the signal supplied to it by the remote-control key, with the consequent switching on of the remote-control switches located inside the actual control unit.

If one of the remote-control switches should be blocked (working contact blocked) during operation, causing continuous activation of the door-locking motor(s), the control unit will switch on remote-control switches that create bridges on the remote-control switch in question, in order to avoid serious damage to the motor(s) concerned. Once normal operation of the faulty remote-control switch is reinstated, then these remote-control switches will switch off.

The central unit is connected to the cable in the cab/bonnet by means of one 12-pin connector and one 28-pin connector. Each central unit has a pin code, which is programmed at the end of the line test. This pin code will consist of 5 digits, each of which will be a binary-coded decimal number from 0 to 9.

In addition, the ECU detects faults in the system, signalling the by causing the anti-theft signalling LED at the centre of the ceiling light to flash. It is possible to identify two types of failure: minor and major. In the first case, with the +15 power supply on, the LED will remain on without flashing, while in the second case, again with the +15 power supply on, the LED will flash. Major failures are those concerning the ECU, and are caused by:

- an error in the ROM/RAM check sum
- an error in the EEPROM check sum
- remote-control switch with working contact blocked.

Technical view of the ECU

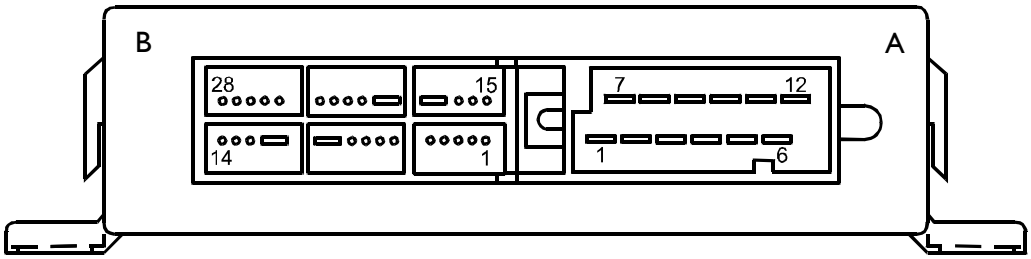

50285

Pin out ECU

Connector	Pin	Function
A	1	Door-blocker on driver's and passenger's side
	2	-
	3	+15 power supply
	4	-
	5	Rear door-blocker from switch on dashboard
	6	-
	7	Side and rear door-blocker
	8	Door-unblocker
	9	+30 power supply
	10	-
	11	Earth
	12	-
B	1 ÷ 4	-
	5	Siren
	6	Power supply to led for signalling activation of the anti-theft protection
	7	Earth
	8 ÷ 11	-
	12	Immobiliser disabling
	13	-
	14	Switching on of LED signalling activation of the anti-theft protection
	15	To switches for switching on the inside lights on driver's and passenger's side doors
	16	To the switches for switching on the inside lights on the right-hand side doors
	17	To the switches for switching on the inside lights on the rear door
	18-19	-
	20	To the switch signalling opening of the bonnet
	21	To the 38-pin diagnostics connector (cell 12)
	22	To the switch for switching on the inside lights on the left-had side door
	23	Signal from electronic volumetric detection module
	24	Switching on of indicator flashing lights
	25 ÷ 28	-

Arrangement of the switches

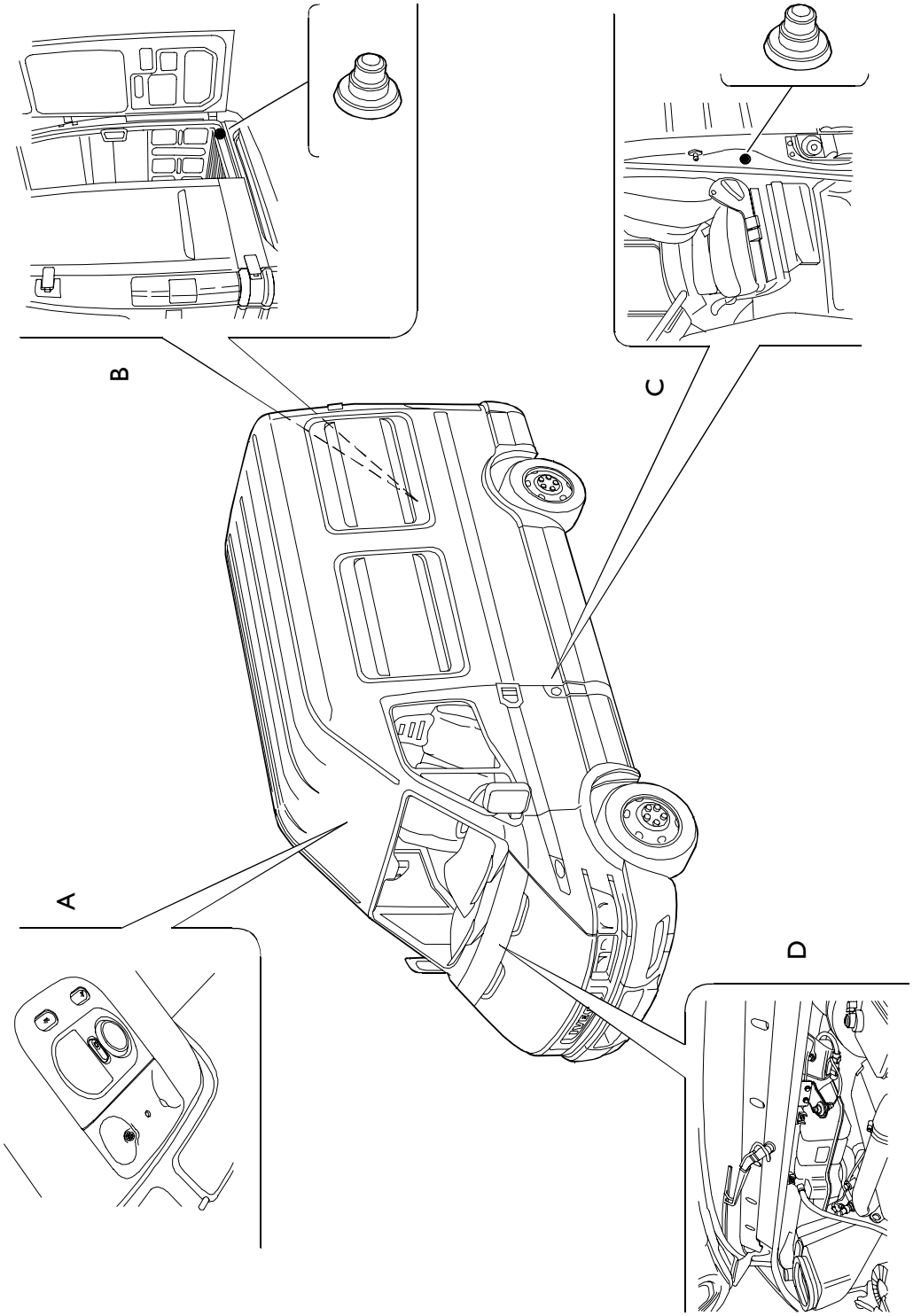

A. VOLUMETRIC DETECTOR ELECTRONIC MODULE - **B**. REAR DOOR BUTTON - **C**. BUTTONS ON FRONT DOORS - **D**. ENGINE BONNET BUTTON

Switches for signalling opening of doors and bonnet

These switches are the same, excluding the one for the bonnet, that controls switching on of the ceiling lights inside the cab and, for the van version, the loading platform. They send the signal indicating the status of the doors and of the bonnet to the ECU.

Door-blocker/unblocker motors

Each door has its own motor for closing/opening the lock on the door.

Operation of the motor is enabled by switching the remote-control switches on the circuit card of the ECU on/off for a pre-established period of time, programmable in the EEPROM of the ECY.

These motors can be activated in two different ways:

- by means of the pushbutton on the remote-control key (blocking/unblocking of all the doors)
- by means of the switch on the switch panel (blocking/unblocking of the rear door only, in the van version).

With the +15 power supply on, operation of the motors by pressing the pushbutton on the remote-control key is not possible. Activation of the motor of the rear door by means of the switch on the switch panel is possible, on the other hand, regardless of the presence or otherwise of the +15 power supply.

Pinout of a door blocker/unblocker motor

Pin	Function	V	Time required
1	Blocking	**+12V**	**~750 sec.**
	Unblocking	**0V**	**~750 sec.**
2	Blocking	**0V**	**~750 sec.**
	Unblocking	**+12V**	**~750 sec.**

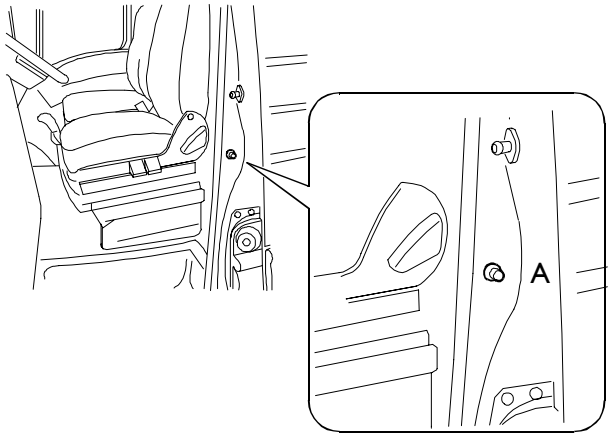

50283

A. DOOR OPENING BUTTON

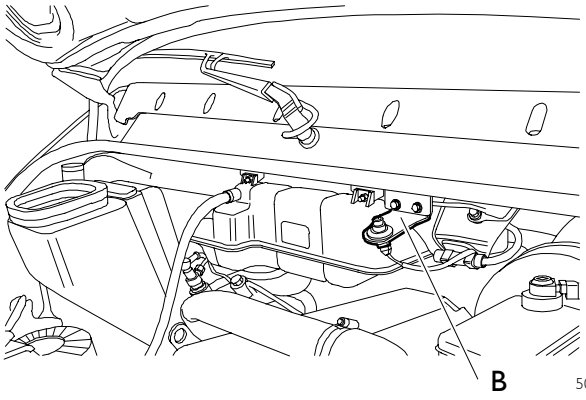

50282

B. ENGINE BONNET SWITCH

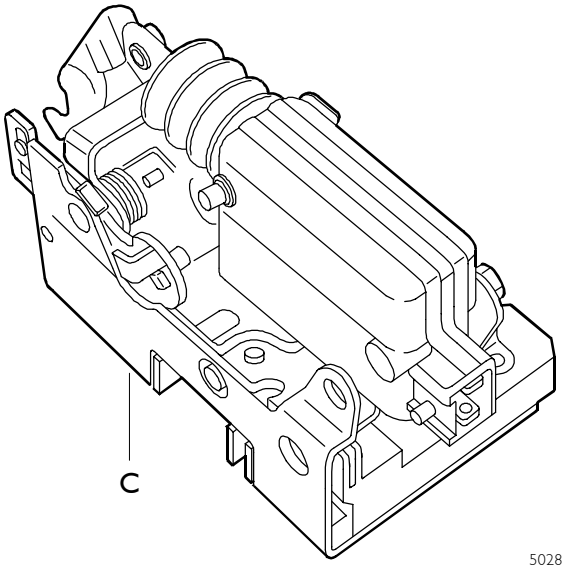

50281

C. DOOR LOCK/RELEASE BUTTON

Electronic volumetric-detection module

This module carries out volumetric detection inside the cab, by means of the two sensors located on the sides of the ceiling-light (A) inside the cab, starting from when the anti-theft protection is activated. It sends the data to the ECU. Any changes in the state inside the cab due, for example, to the windows being smashed or an object being accidentally moved, will be transmitted to the ECU, which will command the anti-theft protection to switch on.

The module includes a LED for signalling that the anti-theft protection has been switched on. This is also mounted in the ceiling-light inside the cab (B), and in addition to the state of the anti-theft protection (active, inactive), it also signals that key learning has been accomplished and any failures in the system.

Pin out

Pin	Function
1	Power supply from ECU (connector B pin 6)
2	+30 power supply
3	Earth
4	Receiving and transmitting of serial data
5	Signal to ECU (connector B pin 23)
6	LED driver

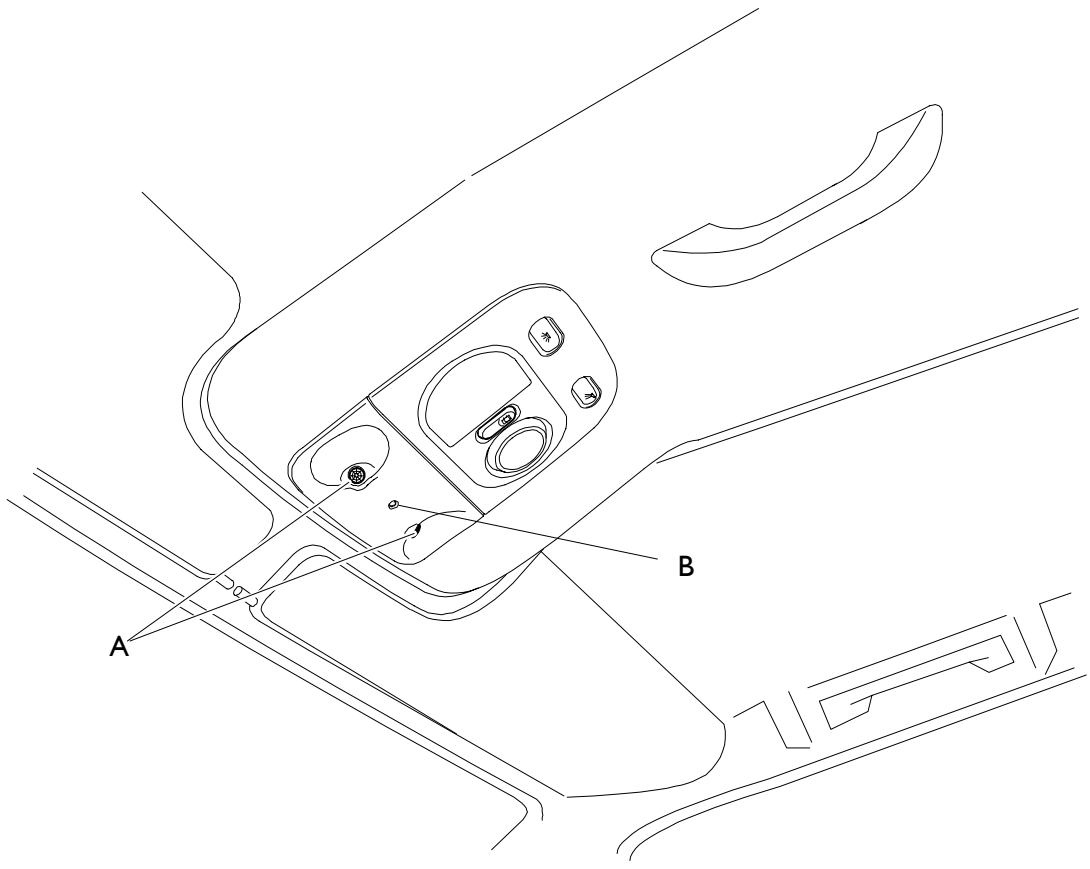

50280

Siren

The siren is located inside the engine compartment. It is self-powered by an internal battery that enables it to sound when it is disconnected from the vehicle, and it must comply with specific requisites, such as supplying a value greater than or equal to 100 dB at a distance of 1 metre from the siren after 5 minutes of operation.

The batteries of the siren are recharged in the following ways:

- trickle-charging
- rapid charging
- charging after disconnecting the siren from the vehicle

Trickle-charging is always activated in order to compensate for the normally occurring loss of charge of the batteries. The batteries will be charged by supplying a 12 mA current for one minute at intervals of one hour.

Rapid charging takes place for a duration of 14 hours with a current of 12 mA. This method is used when the siren is connected for the first time, or when it is reconnected to the system following maintenance operations on the vehicle that require the battery to be disconnected. Once the required time has elapsed, charging stops. This type of charging does not require the +15 power supply to be on.

With the third type of charging, if the siren of the vehicle is disconnected while it is not sounding, the whole time for which it remains disconnected will be the same required to recharge the batteries when it is connected to the system again. If, on the other hand, the siren is disconnected after it has been triggered, when it has to be reconnected to the system the batteries will be charged for 45 seconds for each second that the siren remained disconnected. This recharging process is only carried out with the +15 power supply off. If the batteries are below the minimum charging level, they will be recharged, with the +15 power supply on, for 14 hours at 12 mA.

Siren pin-out

Pin	Function
1	+15 power supply
2	+30 power supply
3	Serial input/output signal
4	Earth

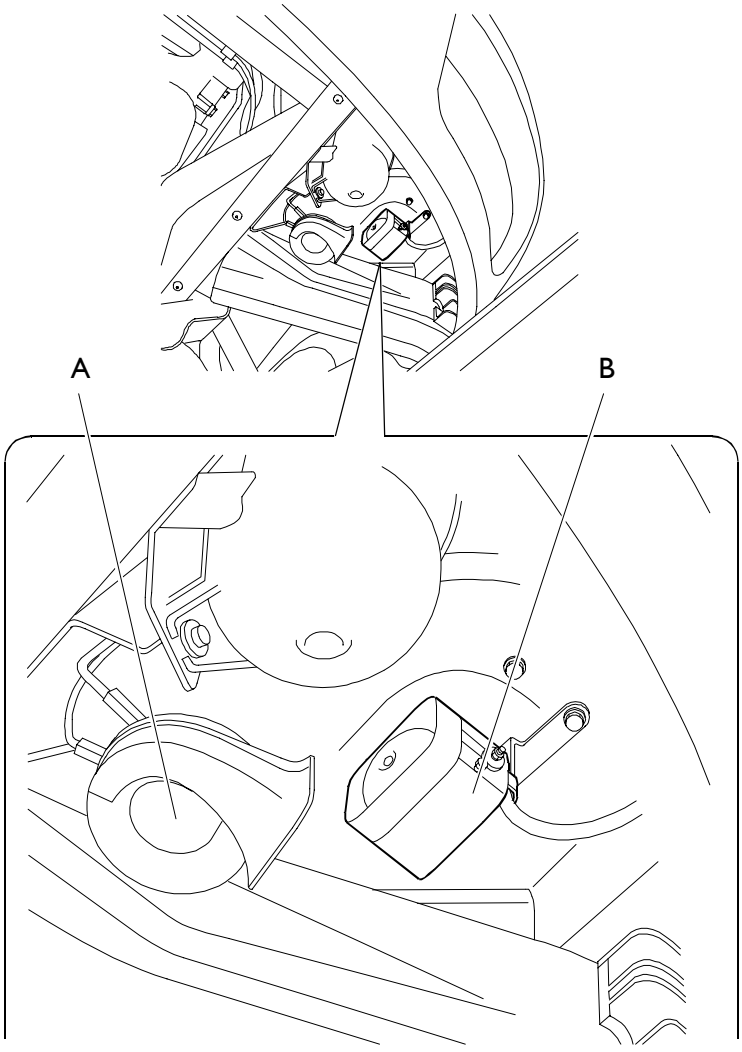

A. HORN
B. SIREN

Siren modes and states

Delivery mode/state

This mode indicates the state of the siren when it is delivered to IVECO. An acoustic signal emitted by the siren will signal its activation when it is connected to the system.

Idle mode/state

This state indicates when the siren has been disconnected and its operating state has been blocked, implementing the siren service mode described below. The siren is blocked in order to retain the charge of the batteries and its microprocessor is de-activated. An acoustic signal produced by the siren will signal its activation when it is reconnected to the system.

Siren disabled state

The siren always goes into an idle state when it is connected to the vehicle on the IVECO production line. In addition, the siren also goes into this state when the anti-theft protection is de-activated by the remote-control key.

Enabled state 1

This is the normal state of the siren, and it indicates that the anti-theft protection has not been activated and that the +15 power supply is off. In this state, the siren can still trigger off an alarm if it is disconnected from the vehicle.

Enabled state 2

In this state, the anti-theft protection is activated. The siren has already received a serial activation command from the ECU. In this state, if the siren is disconnected or the ECU detects a signal able to switch on the siren, this will be activated.

Alarm state 1

In this state the siren is on, however the ECU is not activated. The siren was activated because it was disconnected.

Alarm state 2

In this state the siren is on. The ECU is activated. The siren may have been caused to switch on by a signal from the ECU triggering anti-theft protection or because it was disconnected from the battery of the vehicle.

ERROR CODES

Any faults and their causes are detected by the ECU and stored in it. There is a diagnostics system that enables them to be identified, with the +15 power supply on, by detecting the number of times that the anti-theft signalling LED flashes. Correct interpretation of the flashing will lead to identification of the number of the error code. In order to do this, it is necessary to know that:

- the LED on for 1 second is equivalent to ten
- the LED on for 0.5 seconds is equivalent to one unit.

The time that passes between each time that the LED goes on and the next is 0.5 seconds. If two or more error codes should be detected, the time for which the LED remains off would be 2 seconds.

The error codes are signalled, if the corresponding fault is present, once only and in ascending order. Then, once all the active faults have been signalled, the LED will extinguish.

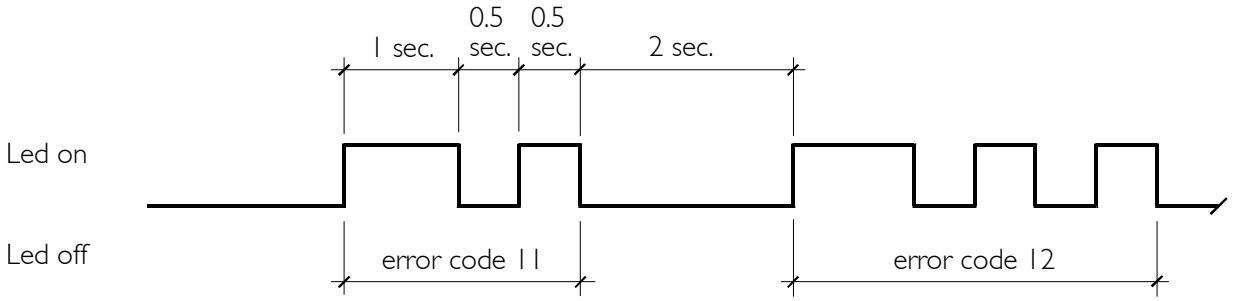

IV.178 ERROR CODE SEQUENCE

Error code table

Error code	Type of improper functioning	Fault detection	Condition for detecting fault
11	EEPROM of the ECU	Checksum error in the remote-control key code in the EEPROM of the ECU	Once for each time the +15 power supply is turned on.
12	ECU	RAM/ROM checksum error. Remote-control switch with working contact blocked	Checksum error on activation of the ECU. Each time the motor is operated the working contact blocks
13	No key programmed	No remote-control key programmed in the ECY	Once every second
14	No PIN code programmed	No EEPROM PIN code programmed	Once every second
15	Door-closing output signal shorted to earth or battery+	Inccorrect door-closing output signal	With remote-control switch on. Once every second
16	Output signal inside cab shored to earth or battery +	Low output with remote-control switch on. High output with remote-control switch off	With remote-control switch on. Once every second
17	Rear door output signal shorted to earth or battery+.	Low output with remote-control switch on. High output with remote-control switch off	With remote-control switch on. Once every second
18	Left direction indicator output signal to earth	Low output with remote-control switch on	With remote-control switch on
19	Right direction indicator output signal to earth	Low output with remote-control switch on	With remote-control switch on
20	Led output signal shorted to earch or battery+	Incorrect Led output signal	Once every second. For the 10 seconds required to activate the ECU
21	No response from ultrasonic module	No signal from ultrasonic module	For the 10 seconds required for activation
22	No response from siren	No signal from siren in response to ECU	For the 10 seconds required for activation
23	Siren batteries dead	Serial message from siren	For the 10 seconds required for activation
24	Siren self-test wrong	Serial message from siren	For the 10 seconds required for activation
25	Rolling code of remote-control key out of range	Rolling code transmitted in RF from the remote-control key not recognised by the EEPROM	On receiving the RF message

AIR SUSPENSIONS ECAS

High-flexibility air suspension system with highly efficient vibration damping effect provided with self-adjusting feature that keeps constant chassis-to-road height, regardless of the load carried by the vehicle. A special push-button allows to change chassis-to-road surface distance, that is the height of the vehicle cargo compartment floor.
Besides the traditional advantages of any air suspension system, the ECAS system also allows:

- air consumption reduction
- prompt response to adjustment
- simple systems
- high safety
- complete system diagnosis.

The ECAS (Electronically Controlled Air Suspension) system automatically controls the vehicle air suspension system nominal level.

The features described above are bound to special operating and safety conditions of the associated systems.

The ECAS electronic control unit automatically checks chassis level (height from road surface) by reading the real values supplied by the sensors and comparing them to the rated values stored in the memory.

With any change of the vehicle trimming, the electronic control unit controls the electropneumatic units to bring the actual level to the level set or previously memorized by the driver.

MODEL	MOTOR	ECAS	VTB
29L	.9 .10 .11 .12	X	
35S	.9 .10 .11 .12 .13	X	
35C	.9 .10 .11 .12 .13		X
40C	.9 .10 .11 .12 .13		X
45C	.11 .13		X
50C	.11 .13		X
60C	.15		X
65C	.15		X

WABCO electronically controlled air suspensions (ECAS)

The system in fig. IV.179 is installed in the following vehicles:
29L - 35S.

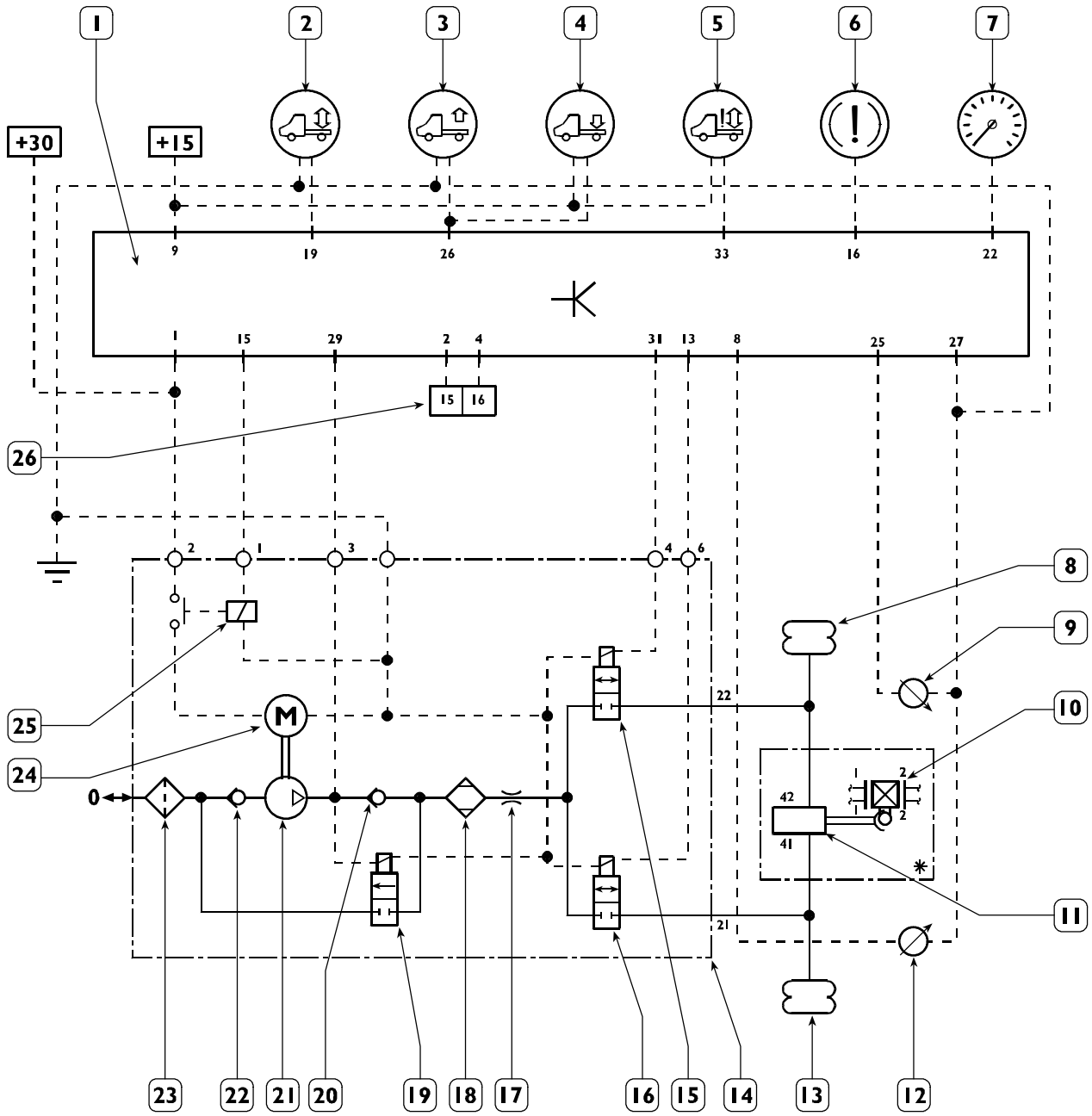

IV.179 SYSTEM OPERATING DIAGRAM

Pin	Description	Component code
1	ECAS electronic control unit	86023
2	Chassis manual leveling control push-button	52090
3	Chassis lifting control push-button	53051
4	Chassis lowering control push-button	53052
5	ECAS pilot lamp	58713
6	Stop light switch	53501
7	Tachometer – tachograph	40001 - 40011
8	RH air spring	-
9	RH level sensor	40046
10	Hydraulic brake action compensator	-
11	Brake action compensator actuator air cylinder	-
12	LH level sensor	40046
13	LH air spring	-
14	Electrocompressor unit	78233
15	RH chassis actuator solenoid valve	-
16	LH chassis actuator solenoid valve	-
17	Throttle valve	-
18	Dryer filter	-
19	Air spring relief solenoid valve	-
20	One-way valve	-
21	Compressor	-
22	One-way valve	-
23	Intake filter	-
24	Compressor motor	-
25	Motor relay	-
26	Diagnostic socket	72008

LOCATION OF THE COMPONENTS ON THE VEHICLE

Vehicles with braking system without ABS

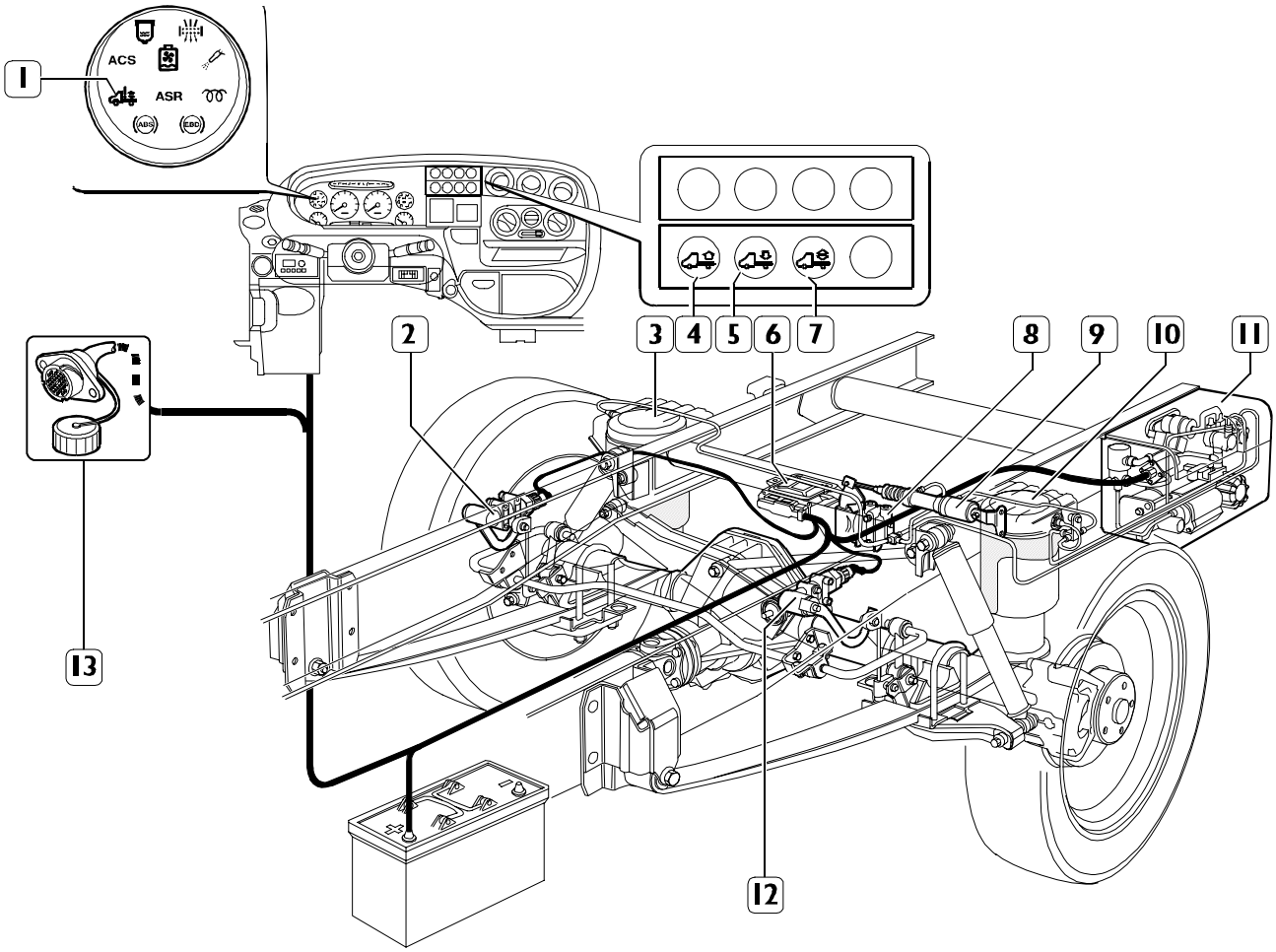

000217t

IV.180 **1.** ECAS WARNING LAMP - **2.** RH LEVEL SENSOR - **3.** RH AIR SPRING - **4.** CHASSIS LIFTING CONTROL PUSH-BUTTON - **5.** CHASSIS LOWERING CONTROL PUSH-BUTTON - **6.** ECAS ECU - **7.** CHASSIS LEVELING CONTROL PUSH-BUTTON - **8.** HYDRAULIC BRAKE ACTION COMPENSATOR - **9.** BRAKE ACTION COMPENSATOR AIR CYLINDER - **10.** LH AIR SPRING - **11.** AIR SUPPLY UNIT - **12.** LH LEVEL SENSOR - **13.** CENTRALIZED DIAGNOSTIC SOCKET

Location of the components on the vehicle

Vehicles with ABS system

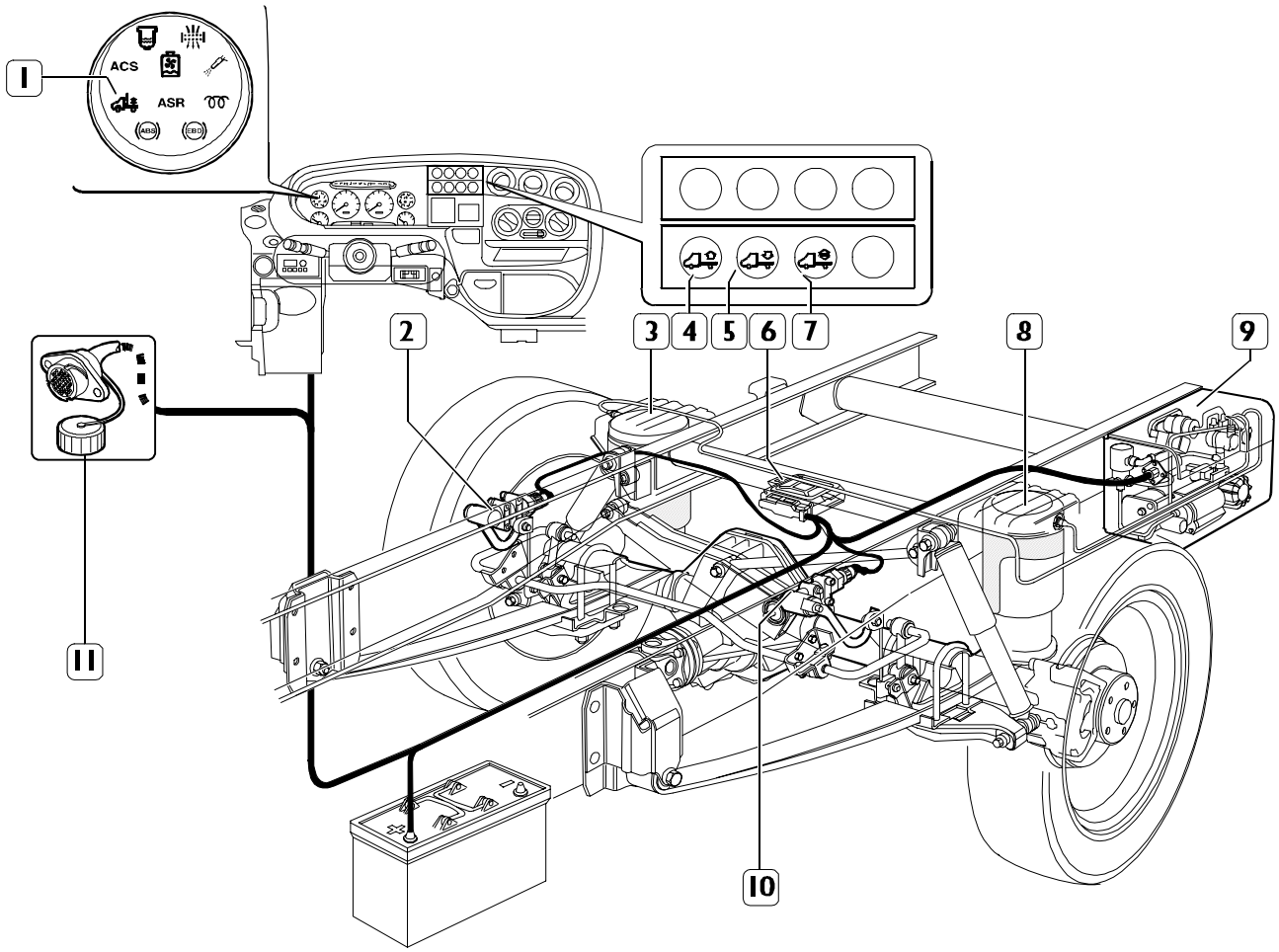

000217t

IV.181 1. ECAS WARNING LAMP - **2.** RH LEVEL SENSOR - **3.** RH AIR SPRING - **4.** CHASSIS LIFTING CONTROL PUSH-BUTTON - **5.** CHASSIS LOWERING CONTROL PUSH-BUTTON - **6.** ECAS ECU - **7.** MANUAL CHASSIS LEVELING CONTROL PUSH-BUTTON - **8.** LH AIR SPRING - **9.** AIR SUPPLY UNIT - **10.** LH LEVEL SENSOR - **11.** CENTRALIZED DIAGNOSTIC SOCKET.

SYSTEM COMPONENTS

Electronic Control Unit

The electronic control unit controls different chassis positions in accordance with the requests from the driver.

As the ignition key switch is turned to ON position, the electronic central unit runs a system check while the red warning lamp on the dashboard panel comes on for about 2 seconds.

If any failure is detected, this warning lamp can stay on fixed for serious system failure or flashing for compressor failure due to overtemperature.

The electronic control unit checks the level sensor at regular intervals in order to keep chassis level constant as required by the driver, and operates the necessary compensation when a deviation of more than 3 counts is detected.

The compensation shall be operated with the following delay:

~ 1 sec. with vehicle still

~ 30 sec. with vehicle moving

If the level is not restored within a maximum time of 30 seconds from the beginning of the compensation, the control unit memorizes a plausibility error and the warning lamp comes on fixed.

During braking, the electronic control unit detects the signal from the stop light switch and stops any chassis level automatic adjustment.

If a difference of more than 4 counts is detected between RH and LH sensors with vehicle still, after a delay of about 8 seconds, the control unit recognizes a "step" condition and stores the data in memory, keeping the chassis level as it is.

Besides a "blink code" option through the red warning lamp for preliminary diagnosis, the electronic control unit is provided with an advanced self-diagnosis system capable to detect and memorize any failures, depending on the concurrent conditions, including intermittent errors occurred in the system during operation and ensure a more appropriate and reliable servicing.

All diagnostic functions, programming, error cancellation, etc., shall be carried out via the computer-aided "MODUS" or "IWT" diagnositc station.

Electronic control unit pin out

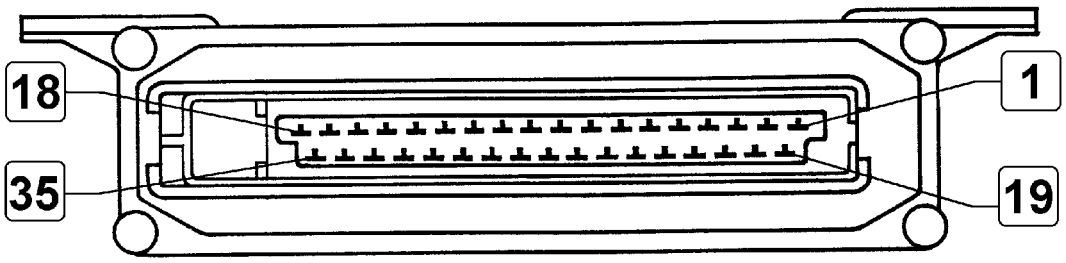

000095t

Pin	Function	Cable colour code
1	Battery positive supply	7772
2	"L" line to pin 15 of the 38-pole diagnostic connector	1194
3	-	-
4	"K" line to pin 16 of the 38-pole diagnostic connector	2294
5	-	-
6	-	-
7	-	-
8	RH level sensor positive	5421
9	Ignition switch positive supply	8090
10	-	-
11	(Positive to air reservoir solenoid valve supply)	9445
12	-	-
13	Positive to LH chassis control solenoid valve	9425
14	-	-
15	Positive to electric compressor control relay	9444
16	Positive from stop light switch	1363
17	-	-
18	-	-
19	Negative from chassis level push-button	8420
20	-	-
21	-	-
22	Vehicle speed signal	5411
23	-	-
24	-	-
25	LH level sensor positive	5422
26	Chassis lift/lower push-button communication line	8091
27	Negative	0000
28	-	-
29	Positive to relief solenoid valve	9423
30	-	-
31	Positive to RH chassis control solenoid valve	9424
32	-	-
33	Negative for failure warning lamp	6008
34	-	-
35	-	-

Level sensor

The level sensor consists of a coil fastened to the chassis and a piston (Fig. IV.182).

The piston is moved inside the coil by the action of a cam and a lever connected to the axle, this way varying the coil inductance.

These variations shall be used by the electronic control unit at the different stages of system operation.

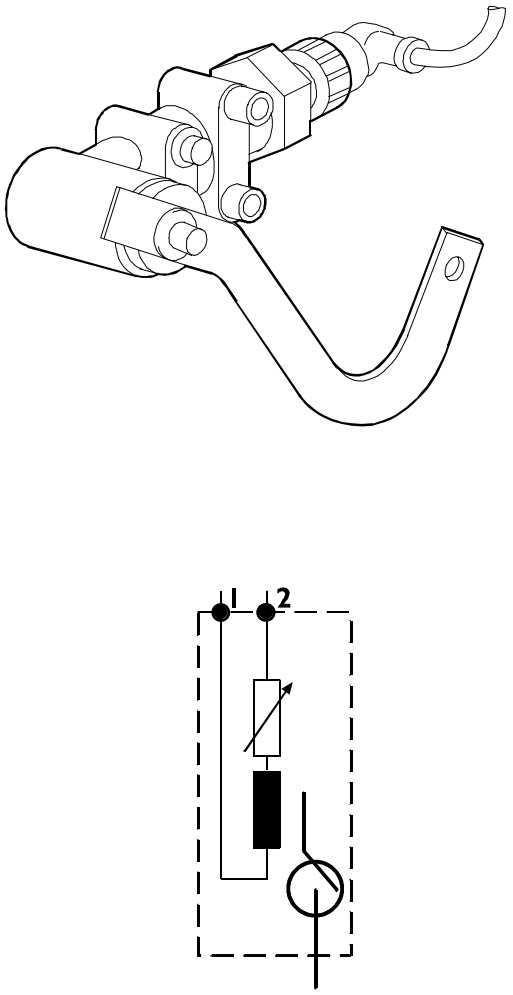

IV.182 LEVEL SENSOR

Here is shown the nominal characteristic curve of the sensor as a function of the angle displacement of the lever.

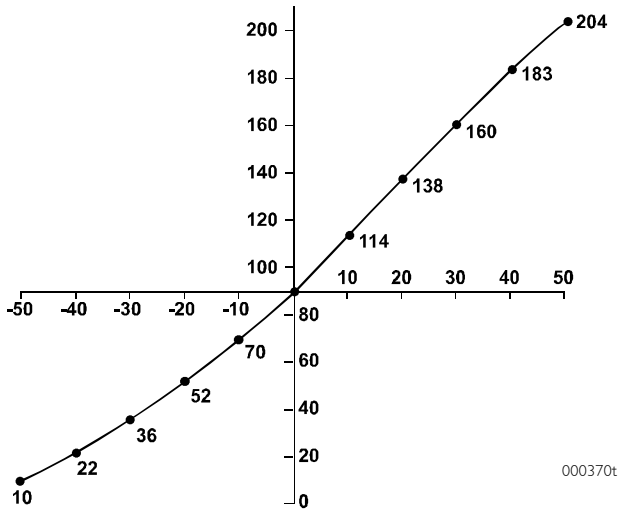

IV.183 OPERATING DIAGRAM

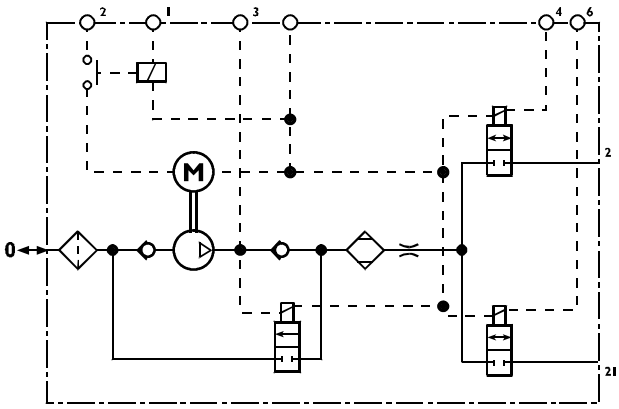

000222t

IV.184 INTERNAL COMPRESSED AIR DIAGRAM

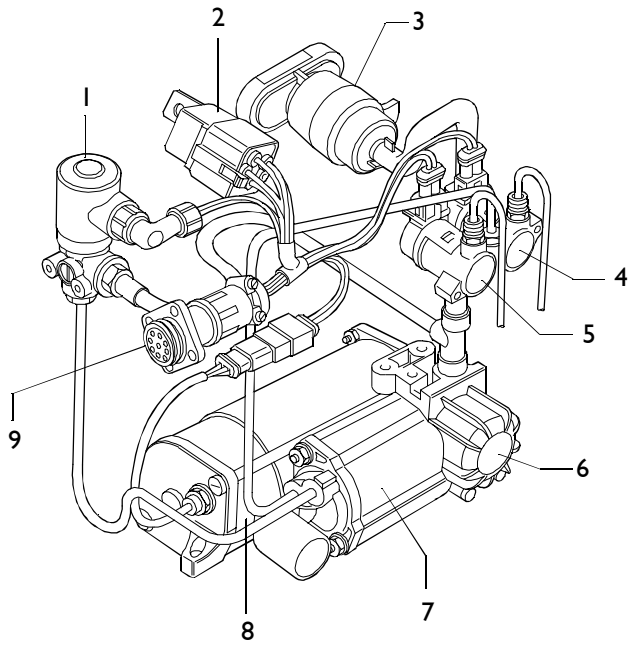

000222t

IV.185 SUPPLY UNIT

Pneumatic supply unit

This component produces, dries,supplies or discharges suspension spring air. Fig. IV.184 shows a diagram of internal component connections.

Components of the air supply unit

1. Relief solenoid valve
2. Electrical motor control relay
3. Intake filter
4. RH chassis control solenoid valve
5. LH chassis control solenoid valve
6. Compressor
7. Drier filter
8. Compressor electrical motor
9. Electrical connector

Brake action compensator

The vehicles not equipped with ABS / EBS / ABD system need a system providing a better control of the braking action on the rear wheels. This system includes an dual brake action compensator and a brake action compensator pneumatic actuator (fig. IV.186).
Depending on the load applied on the rear axle, as detected by the pneumatic actuator, the brake action compensator automatically adjust the braking torque applied to the axle by the brakes.

The diagram shows the compensation ratio corresponding to 0.15 as a function air spring variations.

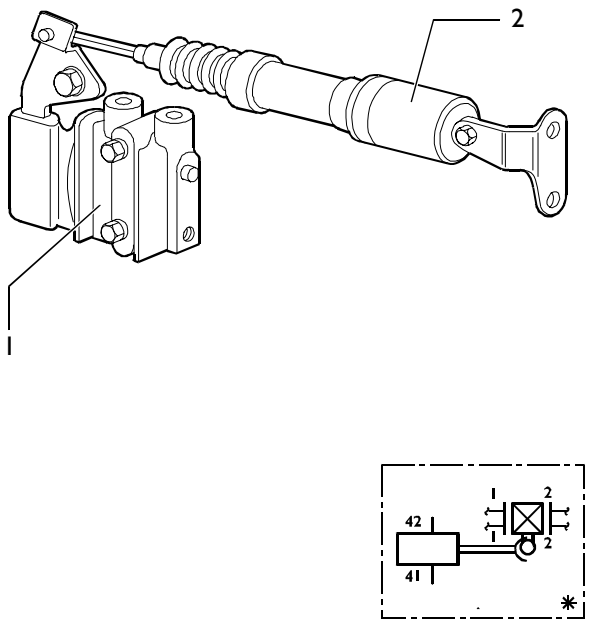

000372t

IV.186 BRAKE ACTION COMPENSATOR UNIT
1.-DUAL BRAKE ACTION COMPENSATOR
2. PNEUMATIC ACTUATOR FOR BRAKE ACTION COMPENSATOR

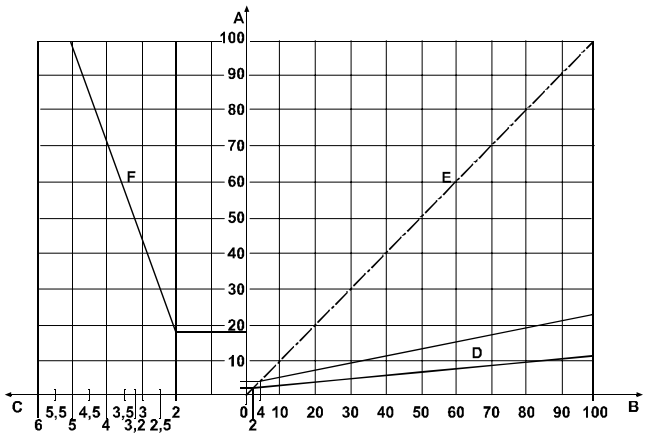

000371t

IV.187 OPERATION DIAGRAM
A. HYDRAULIC OUTPUT PRESSURE (BARS)
B. HYDRAULIC CONTROL PRESSURE (BARS)
C. PNEUMATIC CONTROL PRESSURE (BARS)
D. CHARACTERISTIC CURVE WITH 0.15 RATIO (EMPY)
E. 1:1 RATIO (LOADED)
F. CHARACTERISTIC CURVE OF PNEUMATIC PRESSURE/LOAD

"A" Braking action

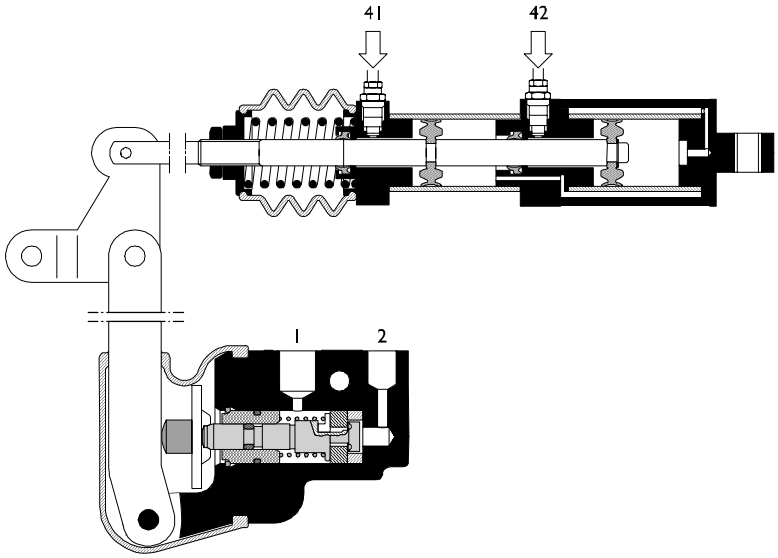

000219t

"B" Braking action with empty vehicle

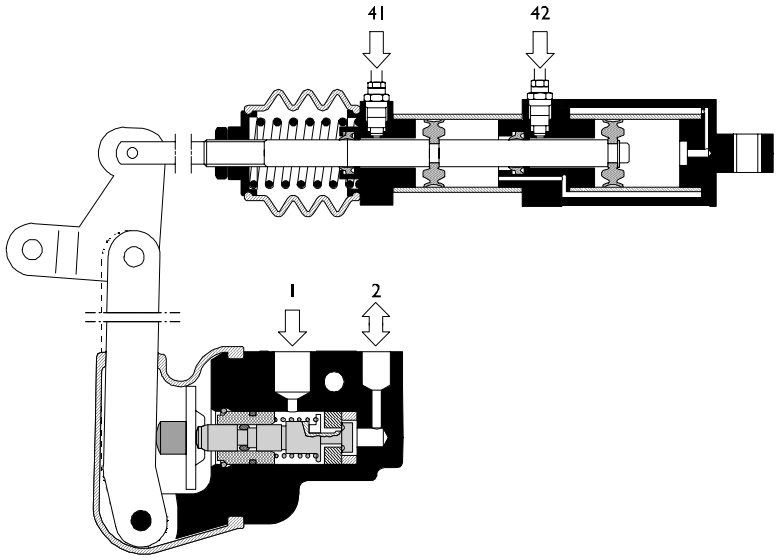

000220t

"C" Braking action with laden vehicle

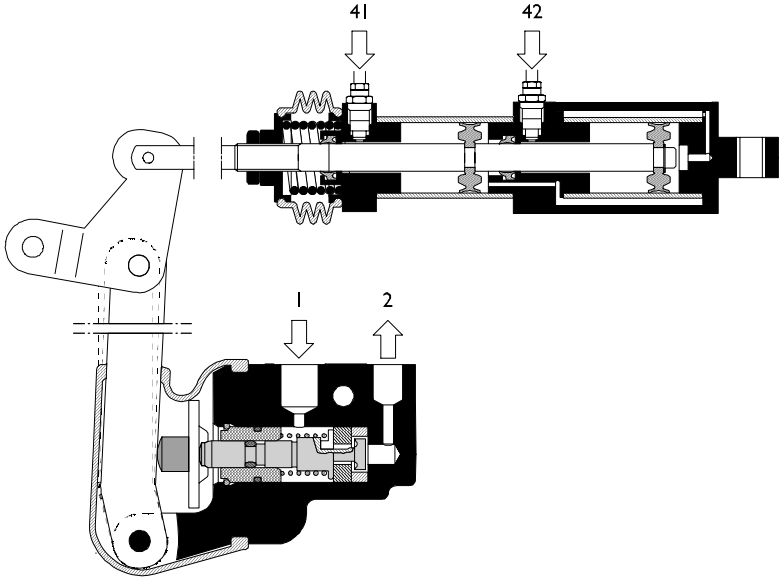

000221t

DESCRIPTION AND OPERATION

Chassis lifting

This operation is allowed at a speed below 15 Km/h; as soon as this speed is exceeded, automatic chassis leveling is actuated.

Proceed as follow to lift the chassis:

– Press chassis lifting push-button and keep it pressed to enable the relay to close the switch and receive a 5A supply. Now, the control unit commands the relay to start the compressor (6) electrical motor (2). Air is then aspirated through the filter (3), compressed and delivered into the system via the one-way valve and the drying filter (7). Simultaneously, the control unit starts solenoid valves "4" and "5" so that the compressed air is supplied to the suspension air springs to lift the chassis.

During the entire operation, the red warning lamp on the dashboard panel shall flash to inform the driver that the chassis is off trim.

The warning lamp shall keep flashing until the chassis is off normal trim.

Chassis lowering is stopped as the push-button is released while the chassis level reached is maintained.

The maximum height is set by level sensors according to the calibration data memorized in the electronic control unit.

Maximum lifting actuation time is 2 minutes to prevent preheats that could damage the electro compressor.

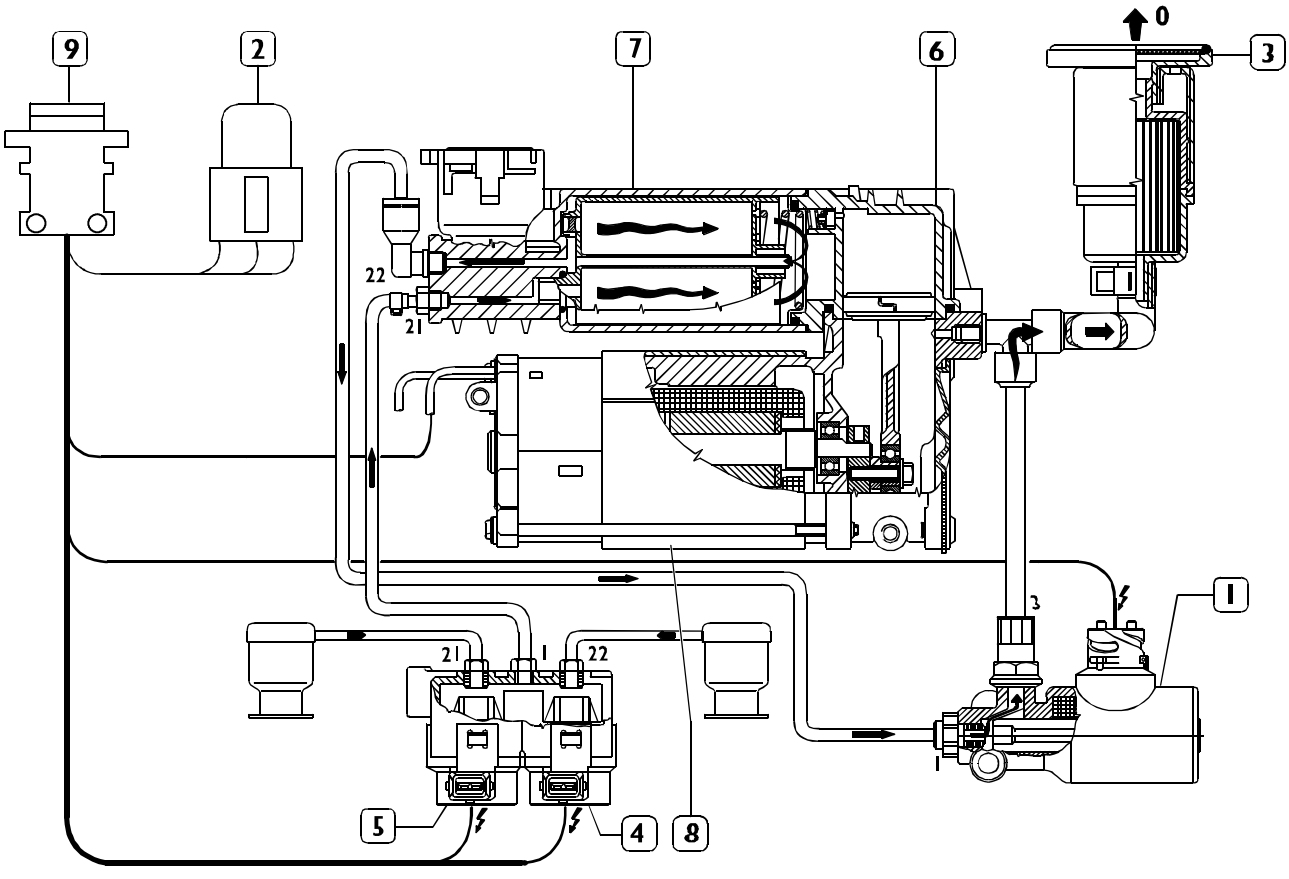

000224t

IV.188 SYSTEM OPERATION DIAGRAM
1. EXHAUST SOLENOID VALVE - **2.** ELECTRICAL MOTOR CONTROL RELAY - **3.** INTAKE FILTER - **4.** RH CHASSIS CONTROL SOLENOID VALVE - **5.** LH CHASSIS CONTROL SOLENOID VALVE - **6.** COMPRESSOR - **7.** DRYER FILTER - **8.** COMPRESSOR CONTROL ELECTRICAL MOTOR - **9.** ELECTRICAL CONNECTOR

Chassis lowering

This operation is allowed at a speed below 15 Km/h; as soon as this speed is exceeded, automatic chassis leveling is actuated.

Proceed as follow to lower the chassis:

– Press the lowering push-button and keep it pressed to enable the relay to send a signal to the control unit to energize solenoid valves (4) and (5) and the exhaust valve (1).
The compressed air contained in the suspension air springs can flow back through the dryier filter "7" for cleaning and, as imposed by the closed one-way valve, flow to the relief solenoid valve to be released in the atmosphere through the intake filter.

During the entire operation, the red warning lamp on the dashboard panel shall flash to inform the driver that the chassis is off trim.

The warning lamp shall keep flashing until the chassis is off normal trim.

Chassis lowering is stopped as the push-button is released while the chassis level reached is maintained.

The maximum height is set by level sensors according to the calibration data memorized in the electronic control unit.

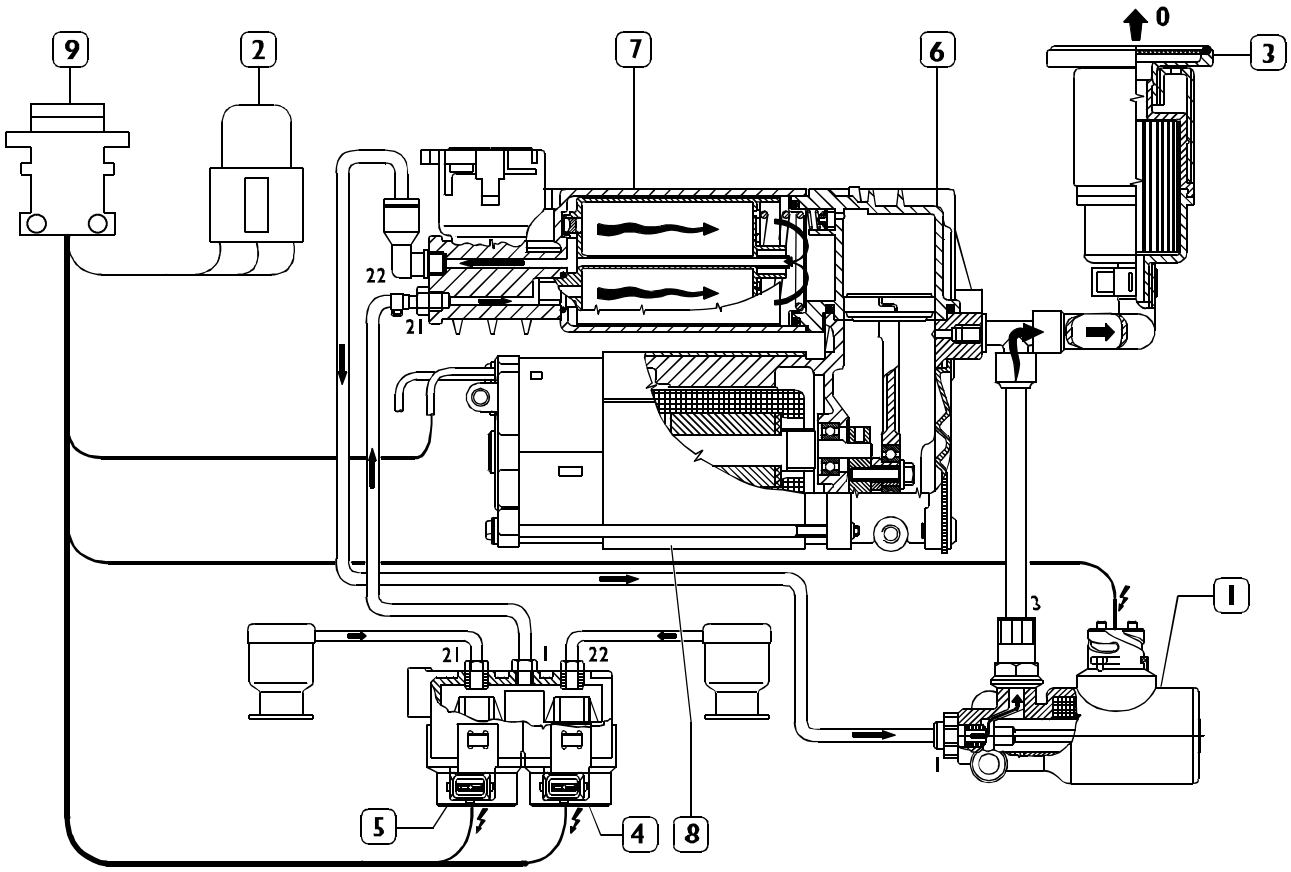

000223t

IV.189 SYSTEM OPERATION DIAGRAM
1. EXHAUST SOLENOID VALVE - **2.** ELECTRICAL MOTOR CONTROL RELAY - **3.** INTAKE FILTER - **4.** RH CHASSIS CONTROL SOLENOID VALVE - **5.** LH CHASSIS CONTROL SOLENOID VALVE - **6.** COMPRESSOR - **7.** DRYER FILTER - **8.** COMPRESSOR CONTROL ELECTRICAL MOTOR - **9.** ELECTRICAL CONNECTOR

Chassis leveling

Chassis leveling can be achieved with vehicle moving at a speed below 15 Km/h by pressing the leveling push-button.

This way, the control unit shall start the lifting or lowering action until the normal height is reached and maintained in accordance with the signals received from the level sensors and the calibration data stored in the control unit memory.

On achievement of the normal trim, the warning lamp on the dashboard panel shall stop flashing.

The same leveling shall be obtained automatically as the vehicle exceed the speed of 15 Km/h.

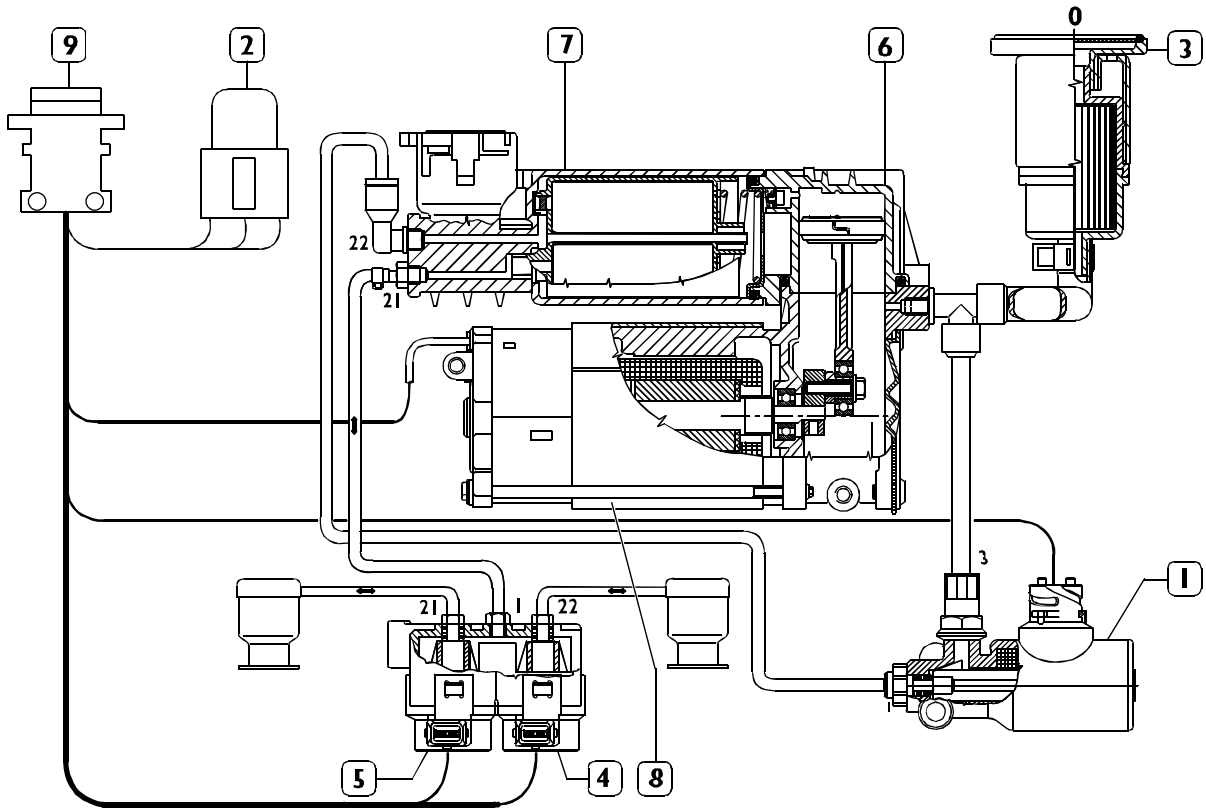

000363t

IV.190 SYSTEM OPERATION DIAGRAM

1. EXHAUST SOLENOID VALVE - **2.** ELECTRICAL MOTOR CONTROL RELAY - **3.** INTAKE FILTER - **4.** RH CHASSIS CONTROL SOLENOID VALVE - **5.** LH CHASSIS CONTROL SOLENOID VALVE - **6.** COMPRESSOR - **7.** DRYER FILTER - **8.** COMPRESSOR CONTROL ELECTRICAL MOTOR - **9.** ELECTRICAL CONNECTOR

VB TECHNIEK PNEUMATIC SUSPENSIONS

The system illustrated is used in the following vehicles:
60C - 65C

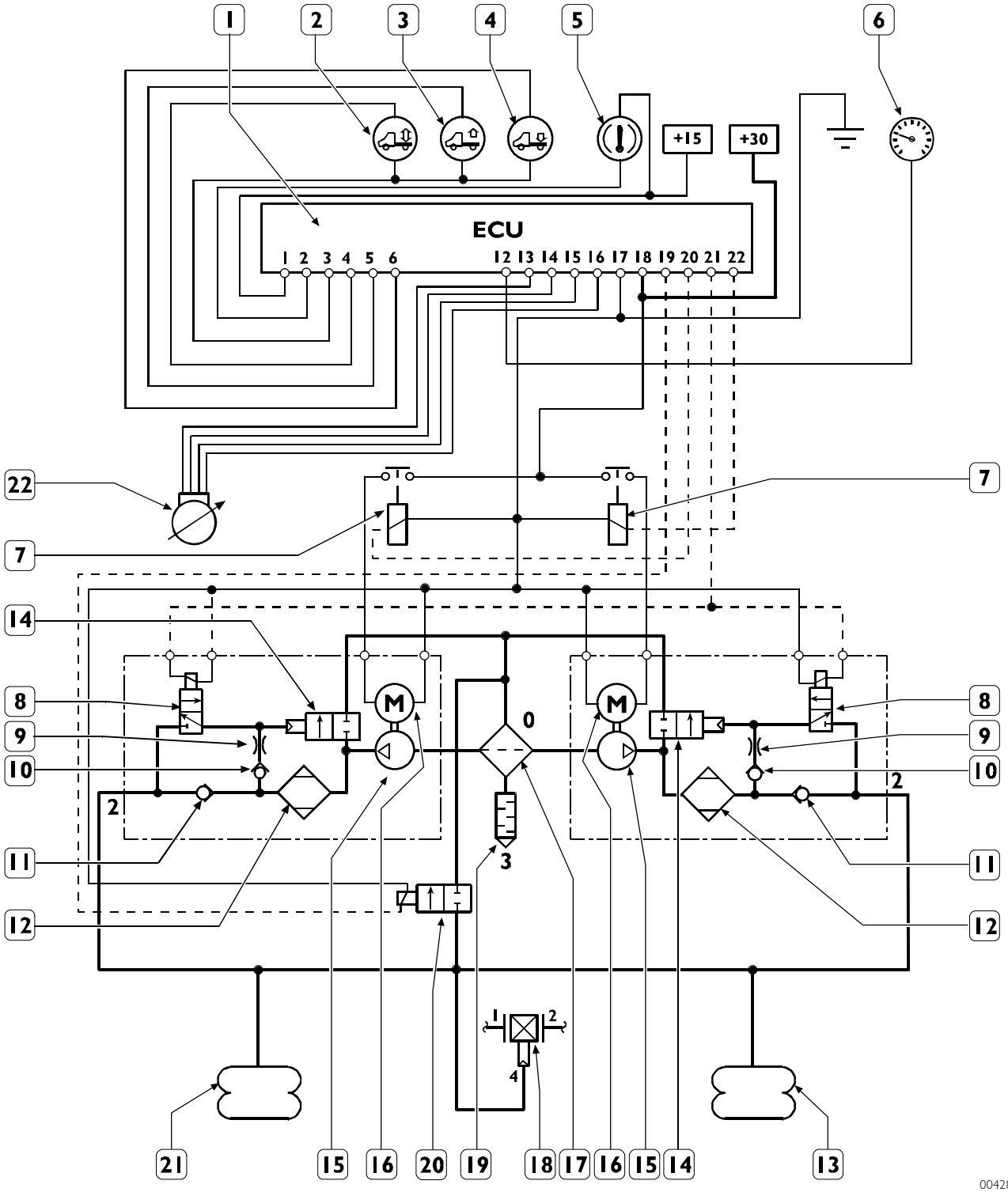

OPERATION DIAGRAMS

Pin	Description
1	Electronic control unit
2	Manual mode actuation button
3	Lowering button
4	Lifting button
5	VBT signalling warning light
6	Tachograph
7	Electric motor control relays
8	Discharge solenoid valve (for washing)
9	Choking valve
10	Unidirectional discharge valve
11	Unidirection feed valve
12	Drier filter
13	Right-hand air spring
14	Pneumatic discharge valve
15	Compressor
16	Compressor actuation electric motor
17	Filter
18	Braking connector
19	Exhaust silencer
20	Exhaust solenoid valve
21	Left-hand air spring
22	Level sensor

LOCATION OF THE COMPONENTS ON THE VEHICLE

Vehicles with braking system without ABS

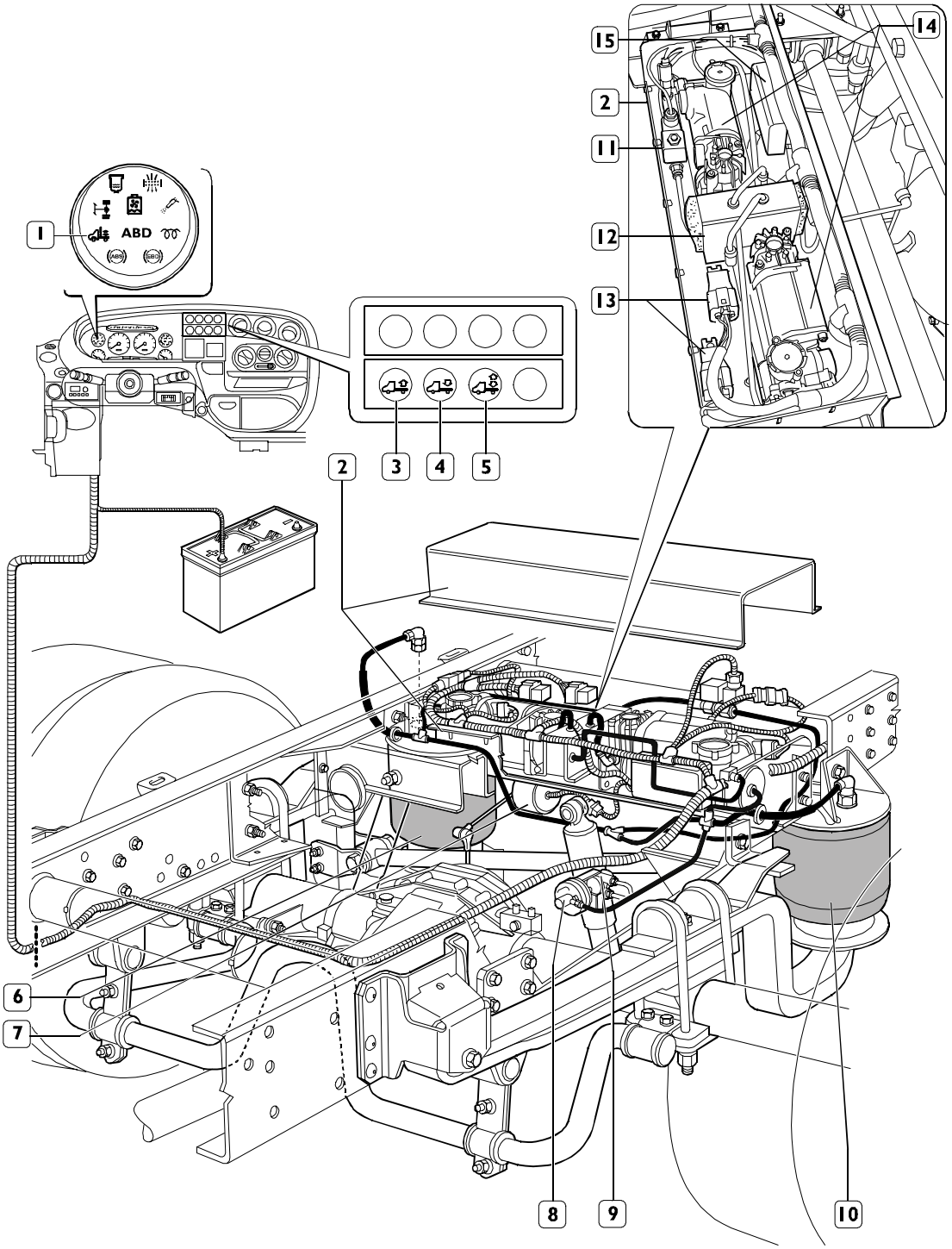

1. VBT WARNING LAMP - **2.** SUSPENSION CONTROL UNIT (ECU, PNEUMATIC SUPPLY UNIT) - **3.** CHASSIS LIFTING SWITCH - **4.** CHASSIS LOWERING PUSH-BUTTON - **5.** MANUAL CONTROL BUTTON - **6.** RH AIR SPRING - **7.** LEVEL SENSOR - **8.** PNEUMATIC BRAKE ACTION COMPENSATOR - **9.** BRAKE ACTION COMPENSATOR - **10.** LH AIR SPRING

Vehicles with ABS system

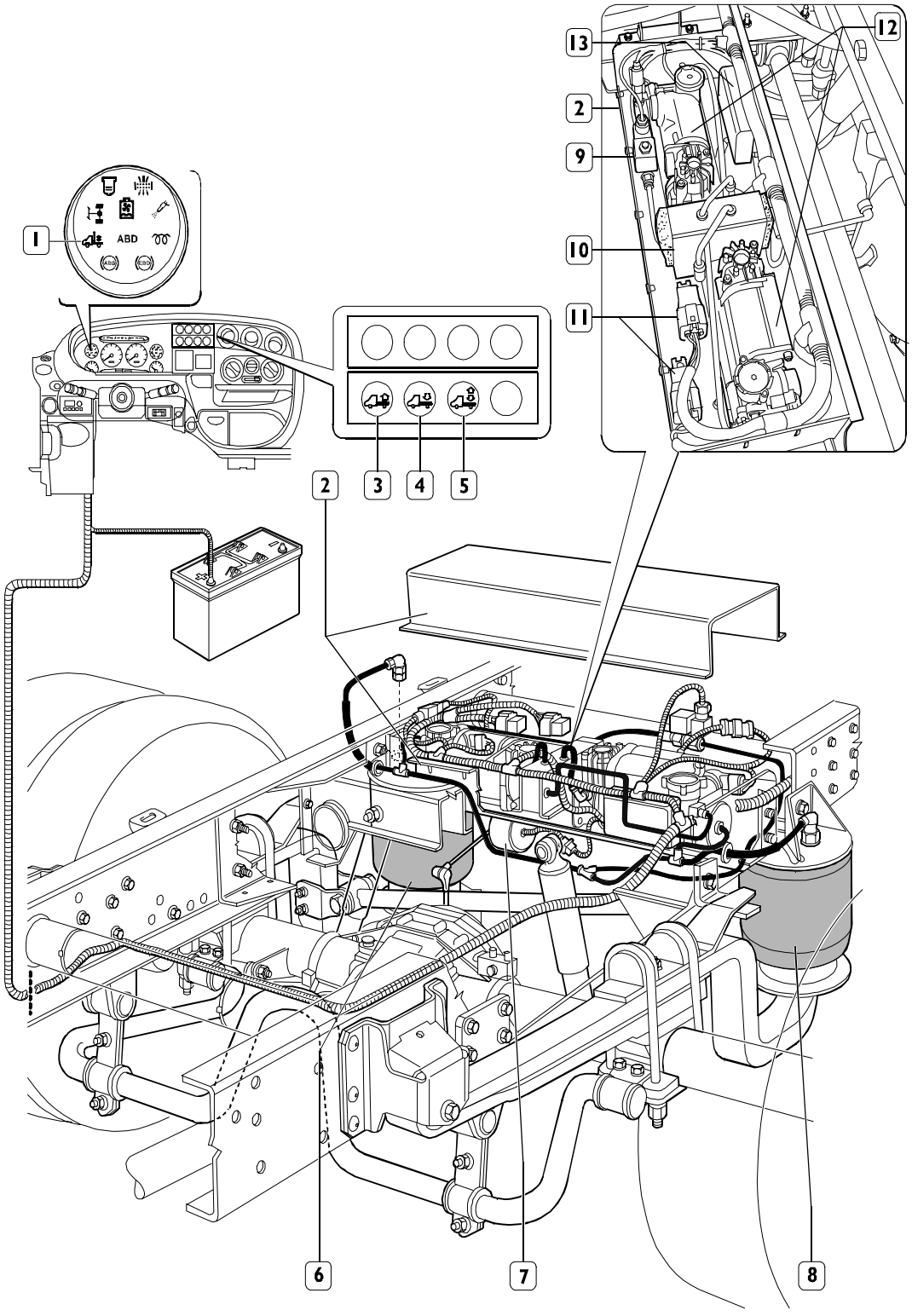

1. VBT WARING LAMP - **2.** SUSPENSION CONTROL UNIT (ECU, PNEUMATIC SUPPLY UNIT) - **3.** CHASSIS LIFTING SWITCH - **4.** CHASSIS LOWERING PUSH-BUTTON - **5.** MANUAL CONTROL BUTTON - **6.** RH AIR SPRING - **7.** LEVEL SENSOR - **8.** LH AIR SPRING

SYSTEM COMPONENTS

Electronic Control Unit (35C - 40C - 45C - 50C)

The electronic control unit controls different chassis positions in accordance with the driver's requests.

As the ignition key switch is turned to ON position, the electronic central unit runs a system check while the red warning lamp on the dashboard panel comes on for about 5 seconds.

If no failures are detected, this warning lamp shall turn off, otherwise an automatic blink code shall be started with the following meaning:

Slow blinking - Electric compressor overload due to prolonged manual actuation.
Fast blinking - Electric compressor overload
Fixed on - Level sensor cable
Off - Supply failure
Dimmed light - Wrong button operation (simultaneous action) or button connecting cabling failure.

The control unit is fitted with a warning led "**1**" connected to the warning lamp on the dashboard panel, and a set of five connectors "**2**" of which only **1**, **3** and **5** are used.

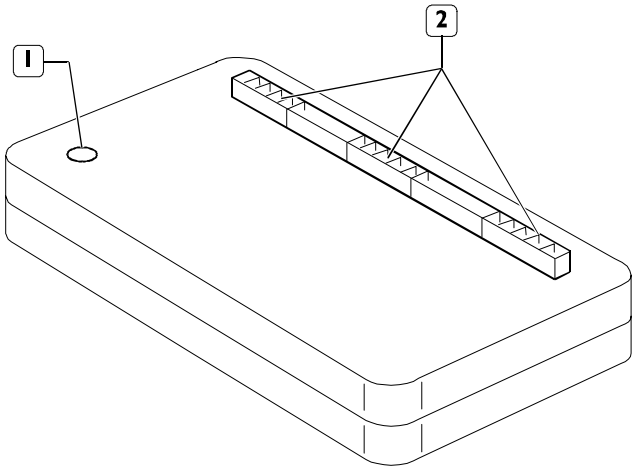

000373t

Connector	Pin	Function	Cable colour
1	1	Signal from level sensor	White
	2	Signal from level sensor	Brown
	3	Positive from level sensor	Yellow
	4	Negative from level sensor	Green
	5	-	-
	6	-	-
3	1	Signal from lifting switch	Grey
	2	Negative for trim variators	Green
	3	Signal from lowering switch	Brown
	4	Negative for failure warning light	Yellow
	5	Key-controlled positive	Pink
	6	Signal from handbrake switch	White
5	1	Electric compressor control remote-control switch positive	White
	2	Discharge solenoid valve control positive	Yellow
	3	Positive from battery	Red
	4	Negative from battery	Black
	5	-	-
	6	-	-

Electronic control unit (60C - 65C)

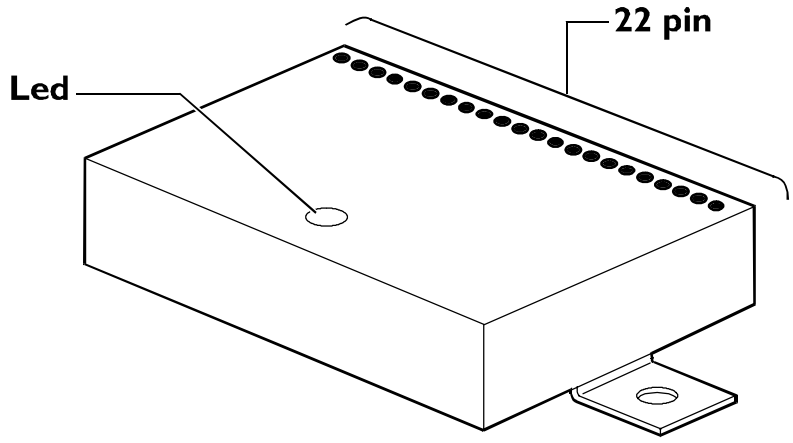

004283t

Pin	Cable colour	Function
1	Pink	+15
2	Yellow	Warning light bulb
3	Green	Button negative
4	White	Signal from handbrake
5	Brown	Lowering button
6	Grey	Lifting button
7	-	Free
8	-	Free
9	-	Free
10	-	Free
11	-	Free
12	Black	Tachograph
13	White	Signal from level sensor for lifting
14	Brown	Signal from level sensor for lowering
15	Yellow	Positive for level sensor
16	Green	Negative for level sensor
17	Green	Earth
18	Pink	+30
19	Brown	Discharge solenoid valve control
20	Grey	Compressor relay 2 control
21	Yellow	Discharge solenoid valve control
22	White	Compressor relay 2 control

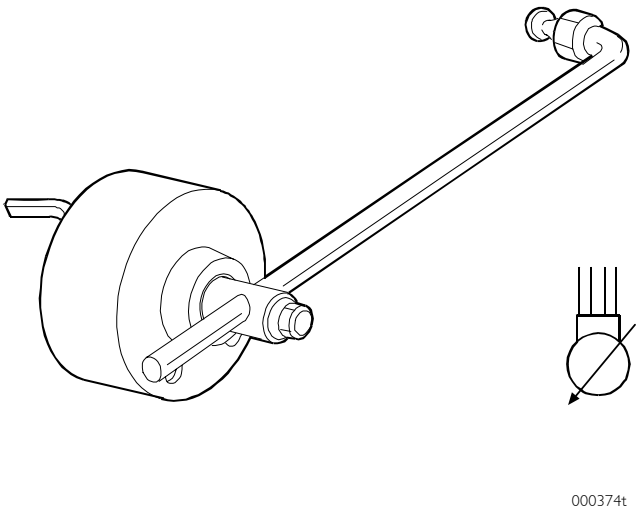

000374t

LEVEL SENSOR

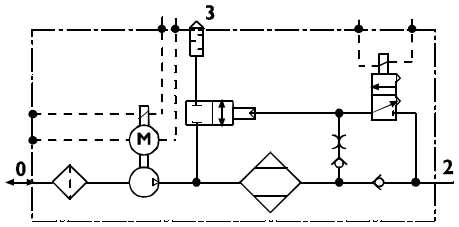

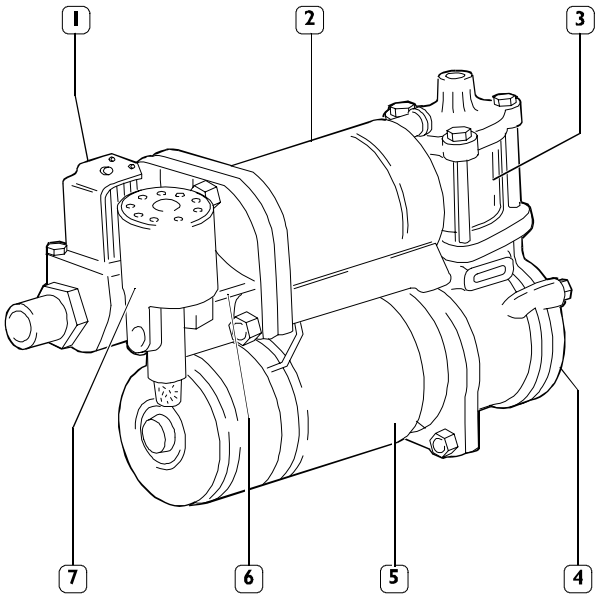

000375t

PNEUMATIC SUPPLY UNIT

Level sensor

In accordance to the chassis height from floor, the level sensor shown sends the signals to start chassis leveling to the ECU.

It is connected to the control unit by means of four cables:

- White: Lifting signal
- Brown: Lowering signal
- Yellow: Positive
- Green: Negative

Pneumatic supply unit

The function of this component is that of distributing or discharging suspension spring air.
Shows the connection of its internal components of the supply unit..

Components of the pneumatic supply unit

1 - Air spring relief solenoid valve
2 - Dryer filter
3 - Compressor
4 - Supply filter
5 - Electrical motor
6 - Relief pneumatic valve
7 - Muffler

Brake action compensator

Those vehicles not equipped with ABS / EBS / ABD require the installation of a system providing better braking action on the rear wheels This system includes an dual brake action compensator and a brake action compensator pneumatic actuator.

Depending on the load applied on the rear axle, as detected by the pneumatic actuator, the brake action compensator automatically adjust the braking torque applied to the axle by the brakes.

The correction ratio is calibrated at 0.25.

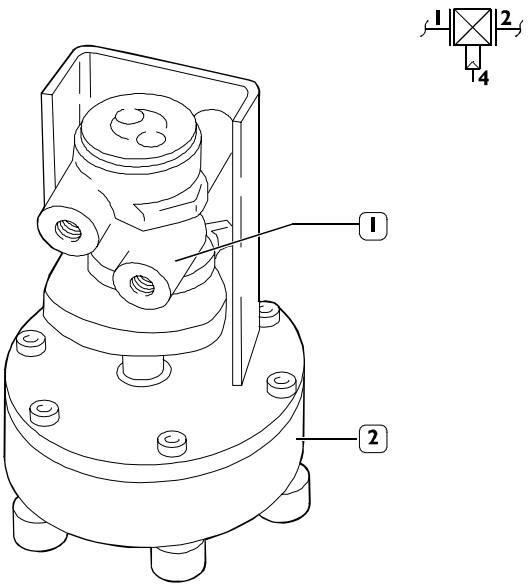

000376t

BRAKE ACTION COMPENSATION UNIT
1. BRAKE ACTION COMPENSATOR - **2**. PNEUMATIC ACTUATOR FOR BRAKE ACTION COMPENSATOR

SYSTEM FUNCTIONALITY

Chassis leveling

Chassis leveling can be achieved automatically when the parking brake is released.

(For vehicles 35C - 40C - 45C - 50C)

As far as vehicles 60C - 65C are concerned, check that the handbrake is OFF, and that the levelling button is not pressed.

Thus, the electronic control unit will, by receiving the signal available on the handbrake on vehicles 35C ÷ 50C, actuate the proper phase (lifting or lowering) until reaching the normal level, which will be subsequently maintained according to the signals from the level sensor with regard to the set adjustment.

Chassis lifting

This operation is allowed with vehicle stopped and parking brake engaged.

Proceed as follow to lift the chassis:

– Press chassis lifting push-button

This way, the control unit energizes electrical motor relay "**5**" that starts the compressor "**3**".

The air aspirated through filter "**4**" is compressed and delivered to the dryer filter "**2**".

The clean air flows through the one-way vale to the suspension air springs to increase chassis height.

During the entire operation, the red warning lamp on the dashboard panel shall turn on to inform the driver that the chassis is off trim.

Chassis lifting is stopped as the push-button is released while the chassis level reached is maintained.

The maximum height is set on occurrence of the following safety conditions:

– Max mechanical stroke of shock absorbers

– Max pressure allowed, about 10 bar

In vehicles 60C - 65C, this operation can be performed even with the vehicle running (up to 20 km/h) by keeping the levelling button depressed.

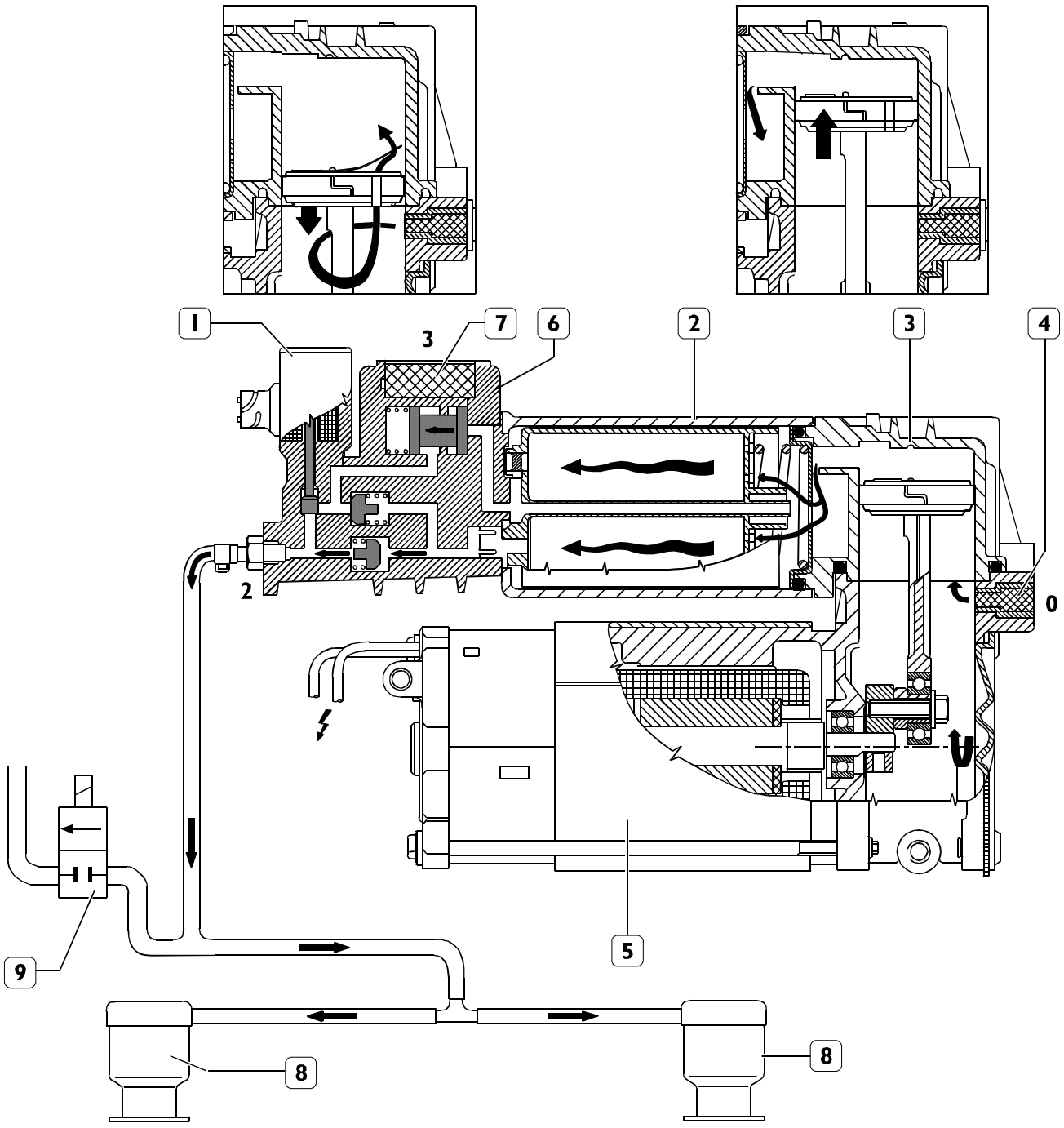

000368t

SYSTEM OPERATION DIAGRAM
1. RELIEF SOLENOID VALVE - **2.** DRYER FILTER - **3.** COMPRESSOR - **4.** ASPIRATION FILTER - **5.** ELECTRICAL MOTOR - **6.** RELIEF VALVE - **7.** DISCHARGE TO ATMOSPHERE WITH MUFFLER - **8.** AIR SPRINGS – **9.** DISCHARGE SOLENOID VALVE

Chassis lowering

This operation is allowed with vehicle stopped and parking brake engaged.

In vehicles 60C - 65C, this operation can be performed even with the vehicle running (up to 20 km/h) by keeping the levelling button depressed.

Proceed as follow to lower the chassis:

– Press chassis lowering push-button

This way, the control unit energizes solenoid valve "**1**" that pilots relief valve "**6**".

The compressed air contained in the suspension air springs flows back through the one-way valve to the dryer filter "**2**" for cleaning; then, as the relief valve "**6**" is on, it is discharged to atmosphere through muffler "**7**".

During the entire operation, the red warning lamp on the dashboard panel shall turn on to inform the driver that the chassis is off trim.

The warning lamp shall stay on until the chassis is off trim.

Chassis lowering is stopped as the push-button is released while the chassis level reached is maintained.

The chassis lowering limit is on contact of air spring internal bumpers.

In vehicles 60C - 65C, solenoid valve "**9**" is available (in addition to the drying filter purifying discharge), which allows direct discharge into the open air.

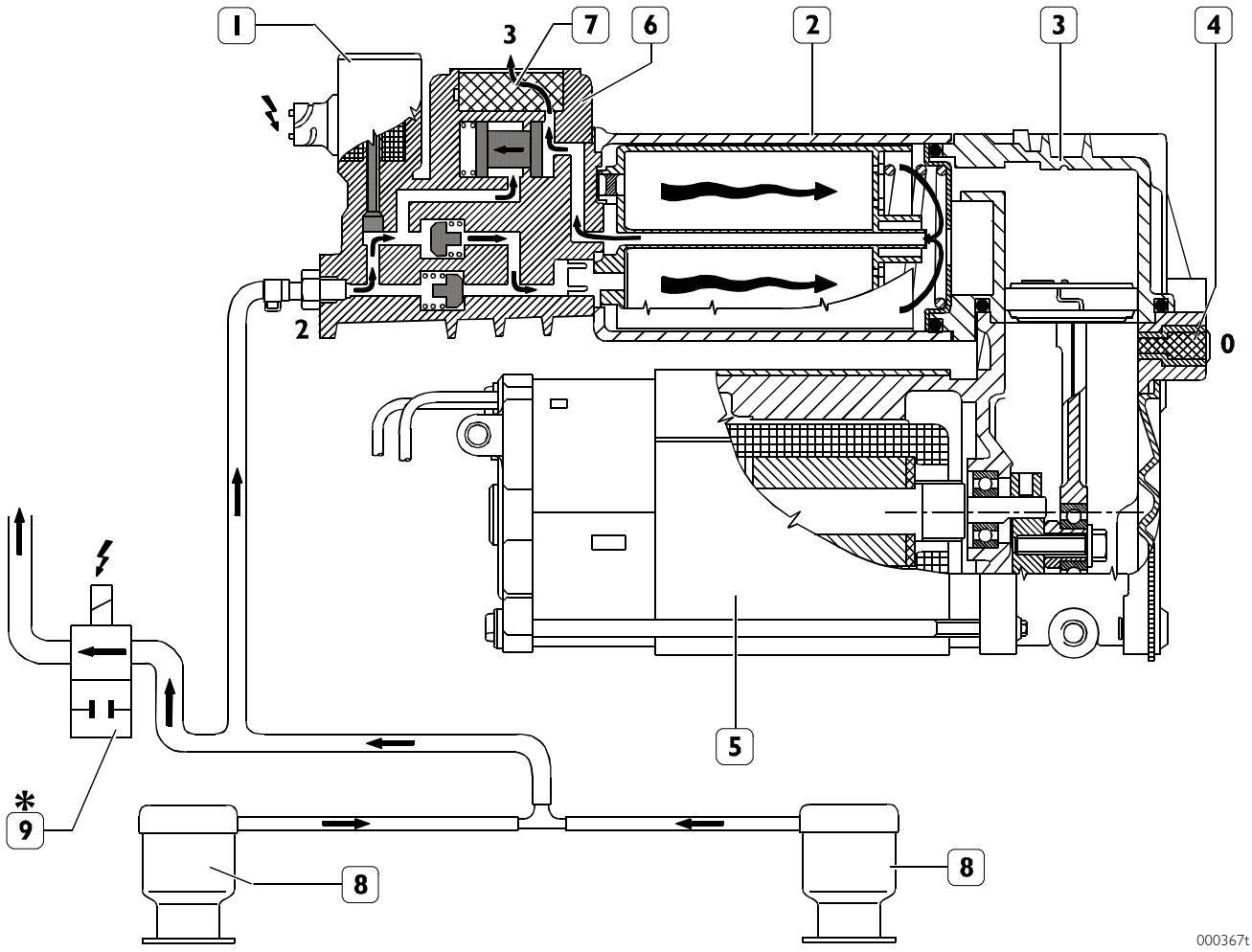

SYSTEM OPERATION DIAGRAM

Diagnostics using Modus

Use adapter 99331043 (A).

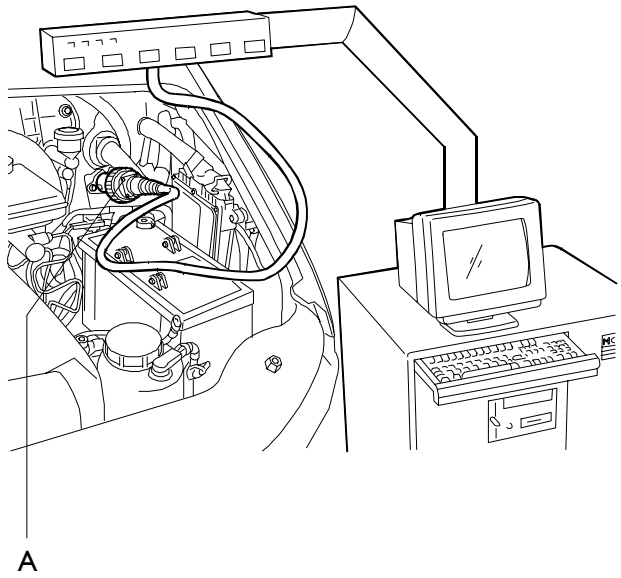

IV.191 DIAGNOSTICS USING MODUS

Diagnostics using IWT

Use adapter 99331043 (A).

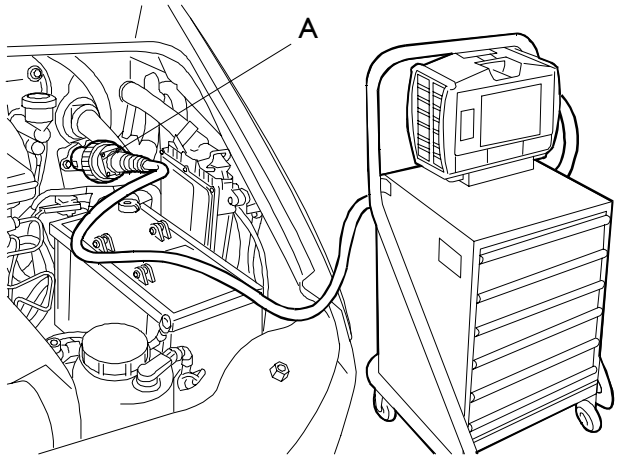

IV.192 DIAGNOSTICS USING IWT

ROTATING SLIDING DOOR

Description

The rotating sliding door consists of:

– Complete panel and door compartment frame

This aluminum extruded profile guarantees a rigid bearing structure to support all system components such as:

– access step;
– moving hinge;
– seals;
– two locks;
– the electronic center;
– door panel front lock pins;
– extension arm;
– compressed air sensitive edge (bus version only);
– motor unit.

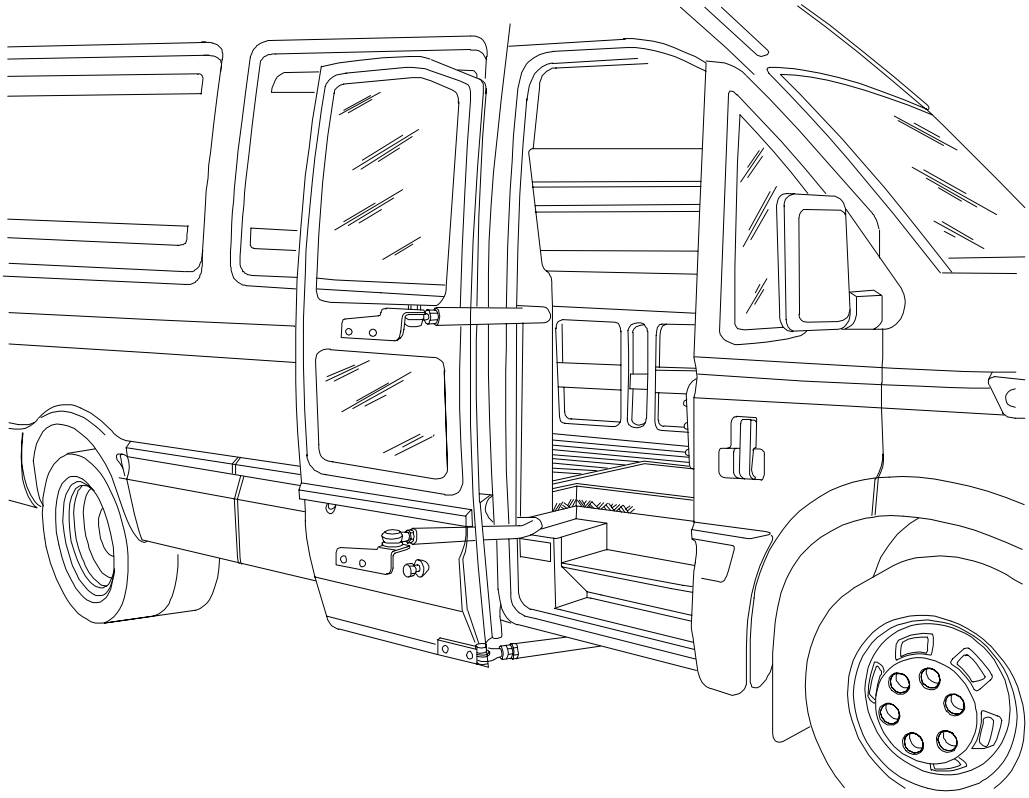

73726

IV.193 ROTATING SLIDING DOOR

SYSTEM COMPONENTS

Electronic center

The electronic center is located under the access step.

In addition to the motor reduction gear control, it also features a series of vehicle and door system communication inputs and outputs. A tachometer signal reading system for the following purposes is provided to prevent the door from being opened with the vehicle moving:

– to prevent the door from opening when the vehicle travels at over 5 Km/h;

– to generate a buzzer when the vehicle is moving and the door is open;

– for the absence of a tachometer signal involving the possibility of the door opening (after push button actuation) with the vehicle moving.

Electrical features

Power	12V dc
Stand–by absorption	20 ÷ 30 mA
Operating absorption	3.5 ÷ 5 mA
Operating temperature	-30°C ÷ +60°C

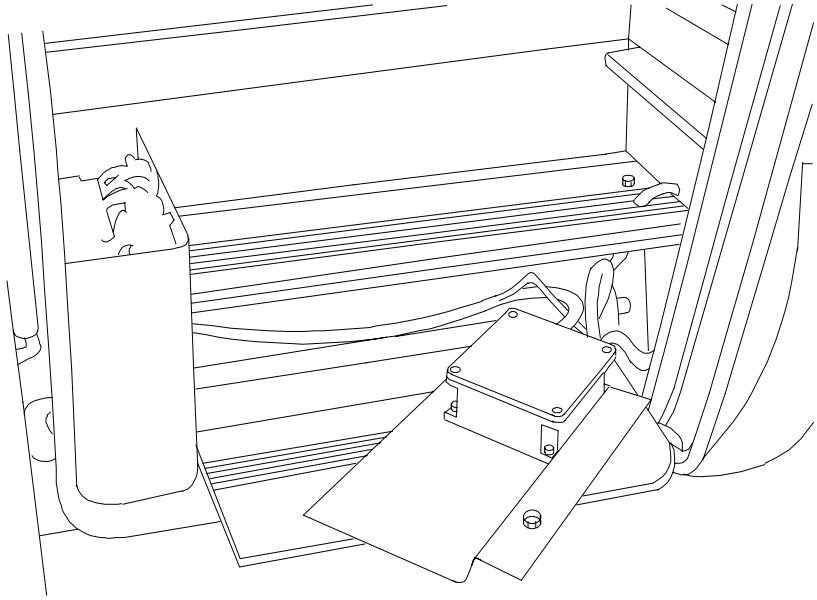

73741

IV.194 ECU LOCATION

Electronic center pin-out

Pin	Description
1A	Free
2A	Free
3A	Tachometer signal
4A	Open open/close push button
5A	Centralized opening remote control input
6A	Centralized opening remote control input
7A	Free
8A	Positive from battery
1B	Free
2B	Free
3B	Positive input from key switch
4B	Door open warning output
5B	External emergency lock closed warning output
6B	Door defect warning output
7B	Free
8B	Negative from battery
1C	Free
2C	Free
3C	Free
4C	Free
5C	Free
6C	Free
7C	Ceiling light control output
8C	Free

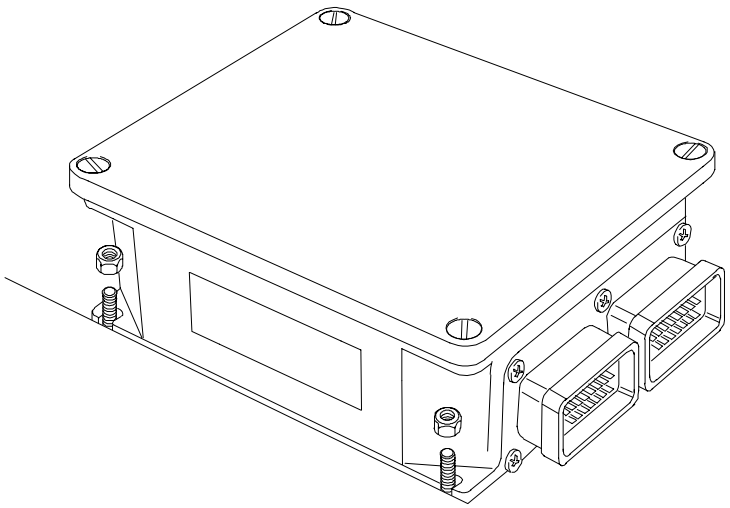

73740

IV.195 ECU LOCATION

Optical and sound warnings

Component location on instrument panel:

1. Door open warning light.
2. Emergency handle lock (yellow warning light).
3. Emergency handle lock activated (bus yellow warning light).
4. Door open/close control push button.

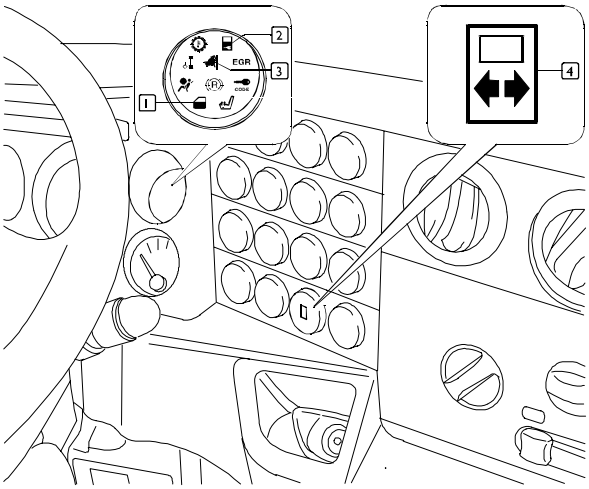

72609

IV.196 COMPONENT LOCATION ON INSTRUMENT PANEL

Sound device

This electronic center piloted device warns users of special operating conditions, such as the vehicle moving with the door open, for instance.

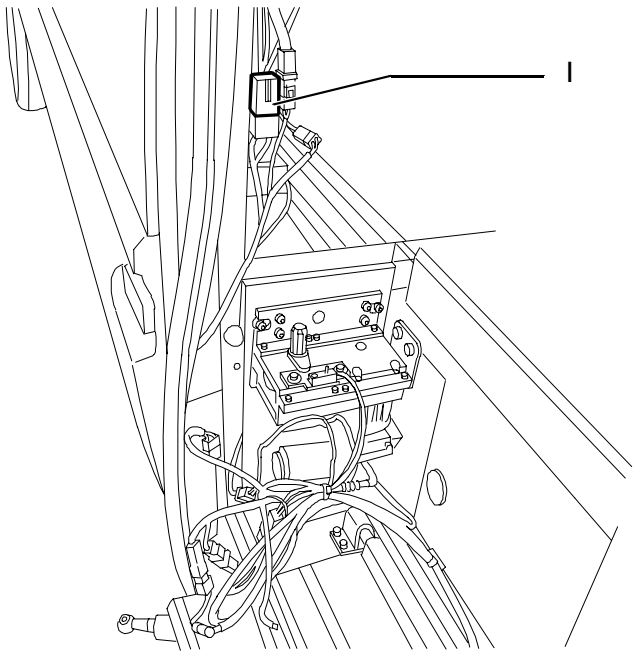

73739

IV.197 BUZZER

DESCRIPTION AND OPERATION

The open/close control is only activated with the vehicle moving, via the instrument panel push button (Cf. Figure IV.196).
If the vehicle is provided with a centralized closing system, door opening can be activated even with the vehicle stationary. In this case, opening and closing must be limited to prevent discharging the vehicle battery.

Opening with the instrument panel push button

The operator controls automatic door opening by actuating the instrument panel push button.

Pressing the push button sends an electrical impulse required for mechanical electro magnetic induced lock release.

At release end, the lock on travel end warning loses the signal and starts the motor reduction gear that makes the door panel rotate open and given visual warning of door open, with a warning light on the instrument panel.

Opening end is with the Complete Opening micro switch.

During door opening, a cam located on the lower part of the hinge and solidal with motor reduction gear rotation lowers the access step to its use position.

Closing with the instrument panel push button

The operator controls automatic door closing by actuating the instrument panel push button.
Pressing the push button sends an electrical impulse to the motor reduction gear that completes its closing travel.
During closing a double obstacle detection system operating on motor ammeter measurement and adjustable via a timer on the center is activated, another one is located on the compressed air sensitive edge of the two door compartment uprights.
Near door close a position reading sent to the tachometer on the door control motor disenables the ammeter controlled sensitive edge to enable otherwise impossible door closing.
The compressed air sensitive edge is activated until receipt of door closed micro switch signal, which activates a signal switching all center functions off.
When closing, the door enables rotation of the mobile step to its rest position with a return spring.
If the vehicle moves with the door open, its closing can be controlled with the push button even at speeds over 5 Km/h, in which case the buzzer remains active (inclusive of the door open warning light) until complete door closing.

Opening/closing with the remote control

The open/close control extends to all vehicle doors including the rotating sliding one.

Movement inversion

After door open/close push button actuation, in whatever position it may be, actuating the push button generates its controlled movement inversion.

Obstacle detection system

The system features motor ammeter control capable of detecting peaks of voltage and of the compressed air sensitive edge located on the front and back of the door compartment, for obstacle detection.
If an obstacle counters door panel movement during closing, over 150N force of compressed air transducer activation opens it.
If an obstacle counters door panel movement during opening, over 150N force of compressed air transducer activation closes it.
Since the door is equipped with the anti-squash function, reading the nearly closed door status signal generated by the motor encoder automatically cats out this function to enable complete door closing.

Emergency operation

The door can be opened in case of system failure or power down by using the emergency lever from the inside of the lock close to the door panel from the outside.

In case of emergency operation, automatic door opening or closing is disenabled until the system is restarted manually.

The outside emergency lock is provided with a key that can be used to secure the vehicle (Cf. Figure. IV.198).

An internal buzzer is actuated if the starter switch is actuated in the service position with external opening emergency locked with the key.

Diagnosis

The system reports a failure when the failure warning light goes on.
This failure can be due to the following causes:

- ❑ Closing does not occur a maximum of ~20 sec after actuation
  - Possible causes:
    Door open micro switch warning failed.
    Electrical cabling cut.

- ❑ Over voltage when opening or closing
  - Possible causes:
    Motor short circuit

- ❑ Door opening/closing travel abnormal.
  - Possible causes:
    Motor encoder signals not recognized.

- ❑ Door does not open.
  - Possible causes:
    Tachometer signal detective or down.

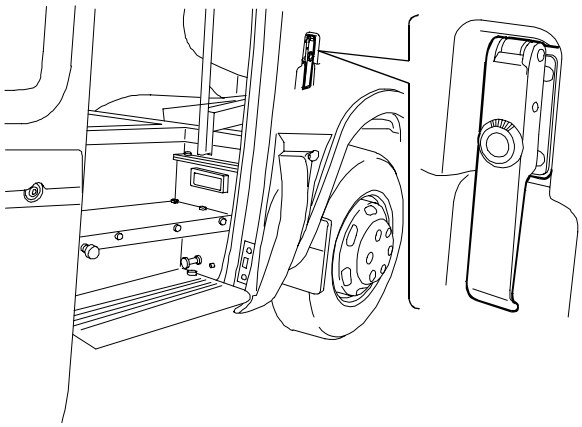

73720

IV.198 EXTERNAL EMERGENCY OPENING

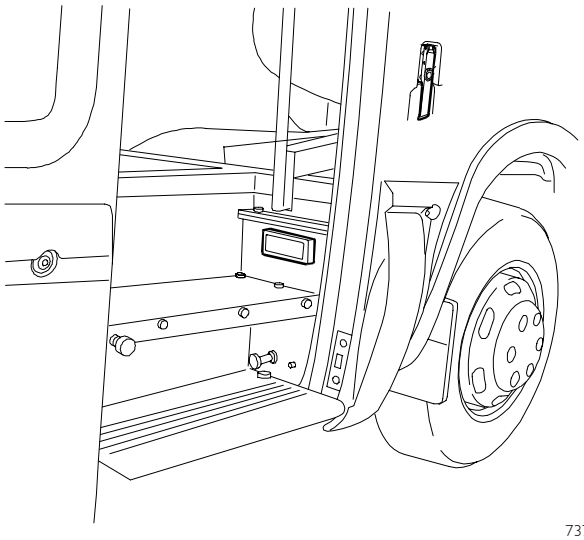

73718

IV.199 STEP LIGHT

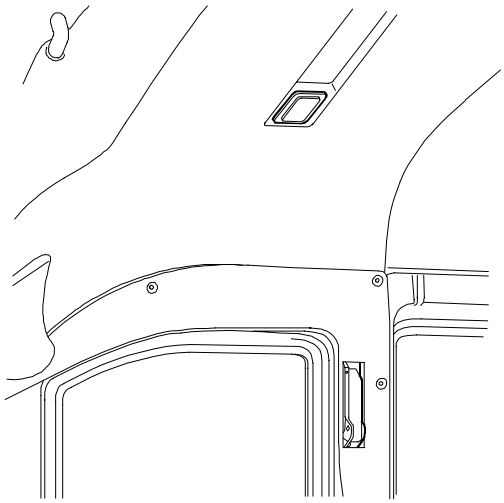

73719

IV.200 1. LIGHT - 2. EMERGENCY OPENINGS

Description of opening/closing cycle

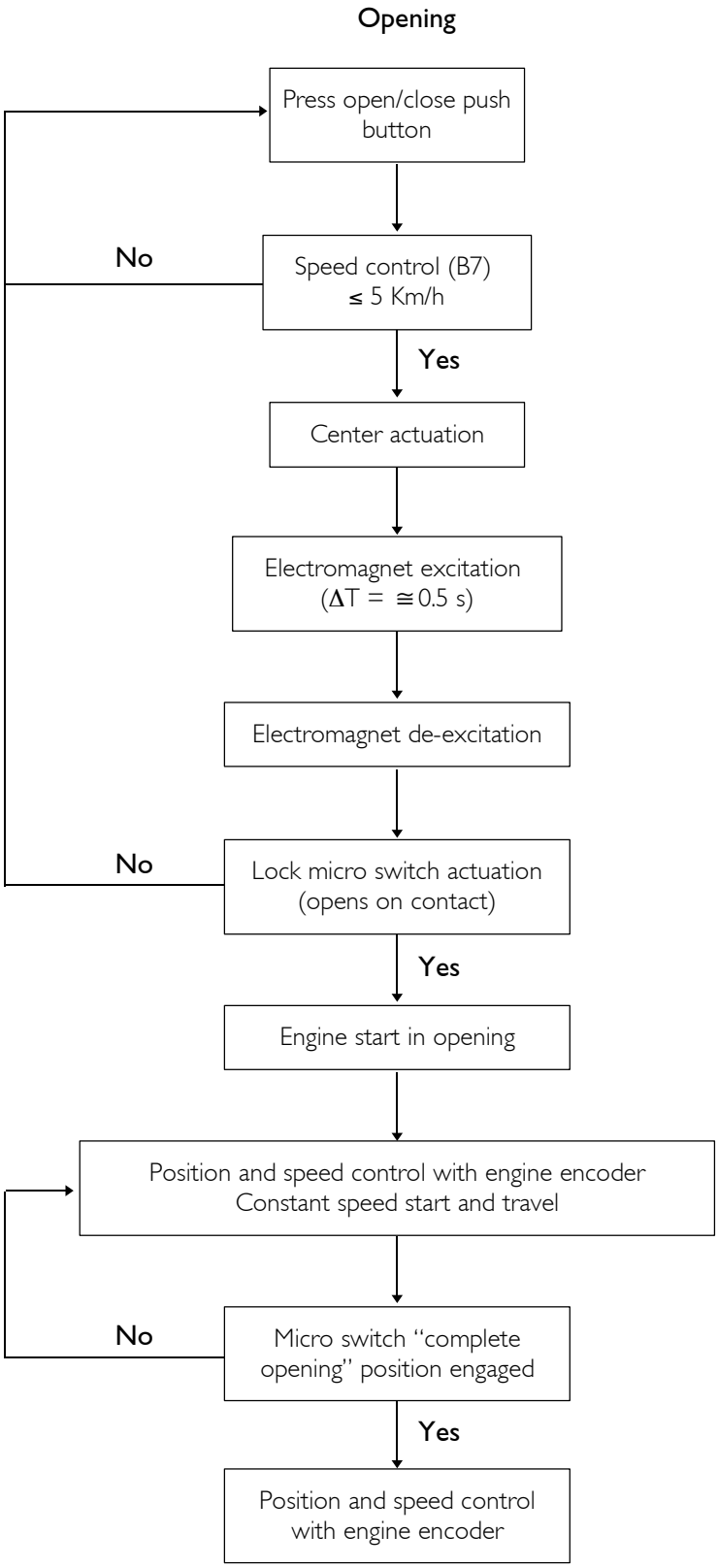

Description of opening/closing cycle

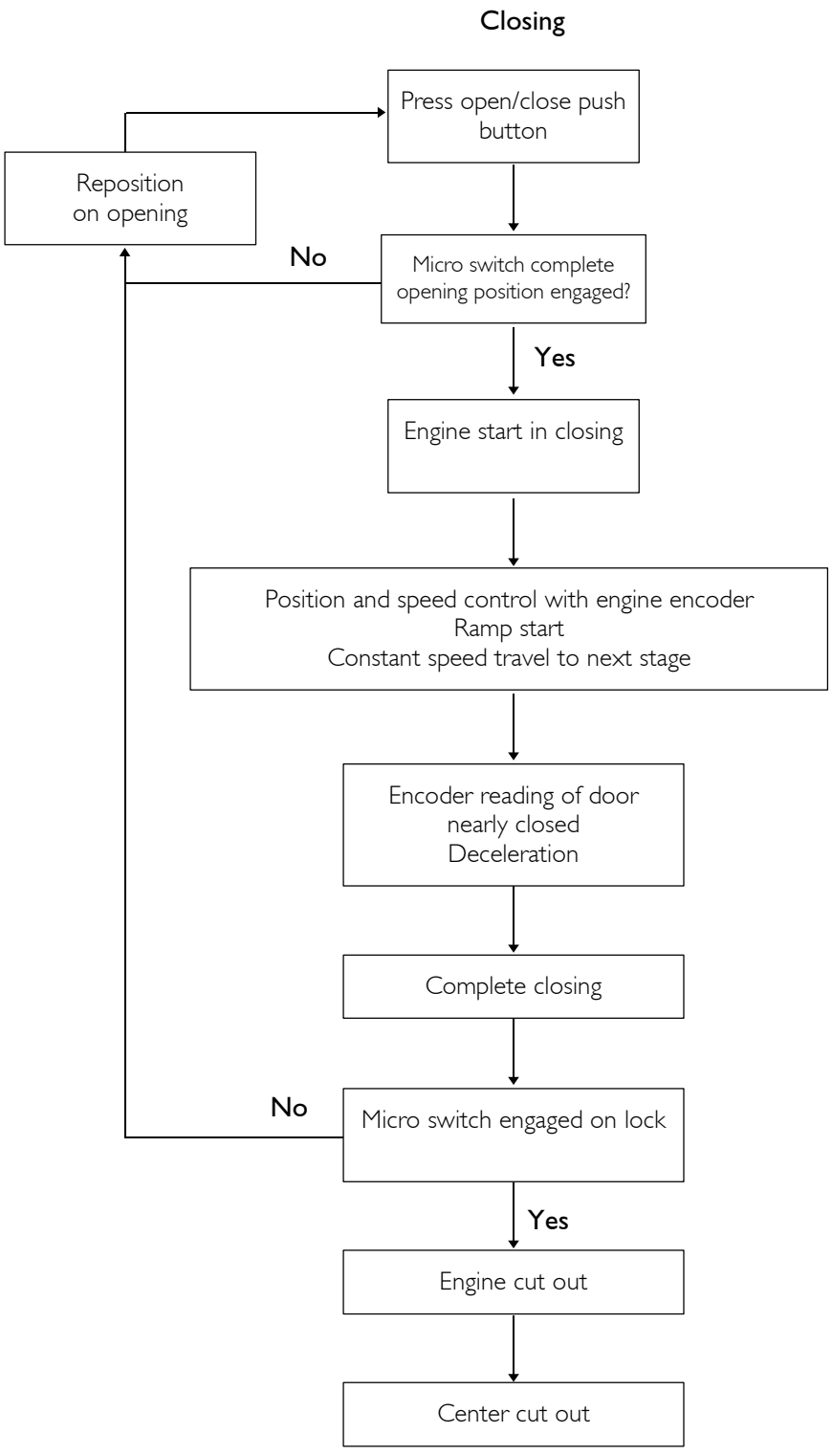

Operating diagram

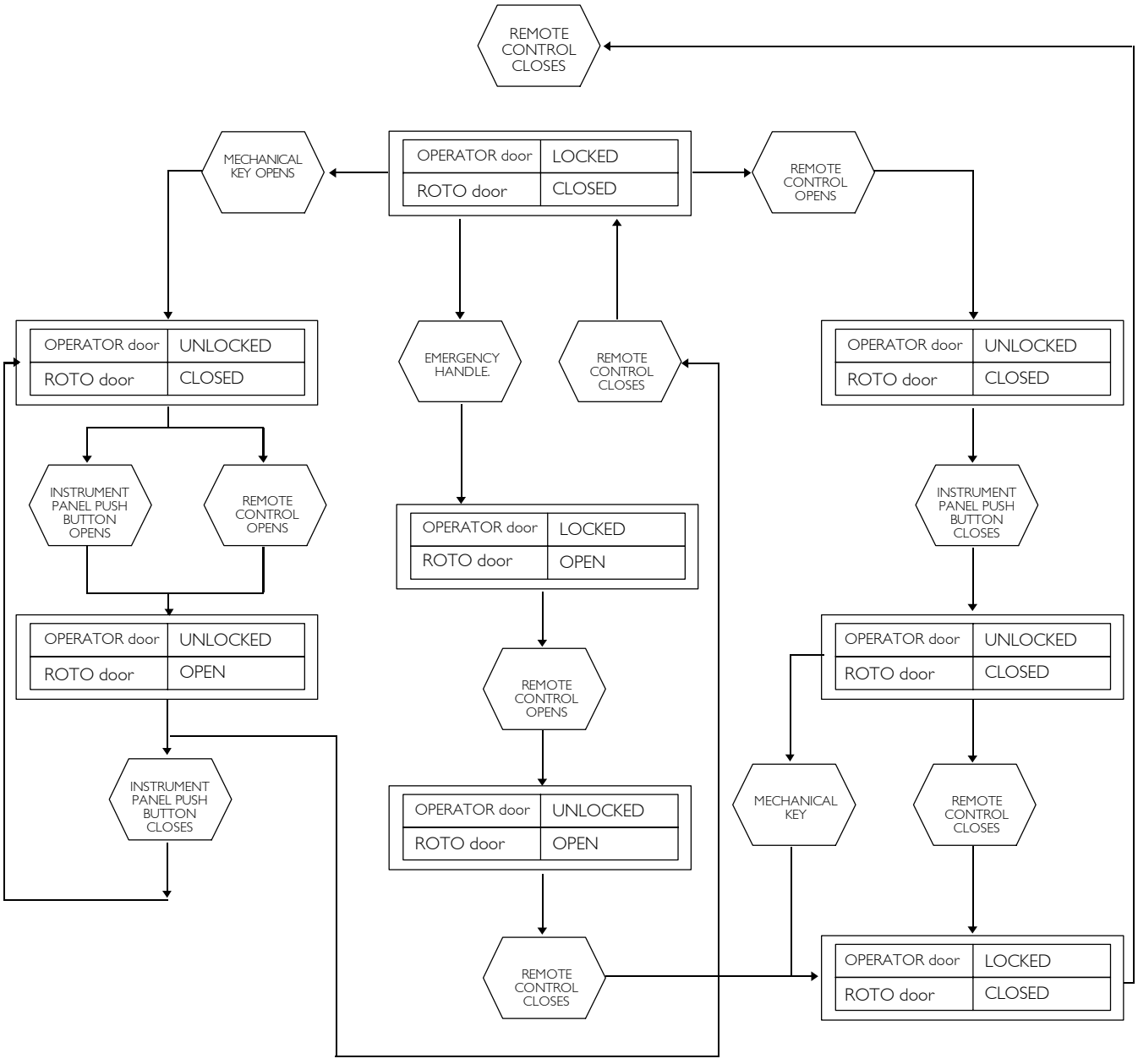

N.B.: As a consequence of use by IVECO of passive type door locks, disconnected operation may occur between operator and rotating sliding door opening and closing.

TELMA ELECTRICAL RETARDER

General

The Telma retarder is an auxiliary electro magnetic brake mounted on the gearshift output, which operates on the Foucault parasite current principle.

A magnetic field that slows down the engine and the vehicle is generated in the retarder according to the position of its control.

This braking action generates heat that is dissipated through the cooling slats on the rotors.

The Telma retarder consists of two discs or rotors (1 and 5) solidal with the gearshift output shaft and a stator (3) located between the two discs and attached to the frame.

Operation

Retarder control is via a 5-position control (Cf. Figure IV.201) located low right on the steering wheel.

Operating this control makes more or less high electrical current pass through coils 2 and 4 to generate a magnetic field passing through rotors 1 and 5. Coils are located with alternating polarity on the stator front and rear surface. The magnetic field crossing the rotors creates parasite Foucault currents that oppose rotor rotation and brake them.

The energy absorbed by the rotors is turned into heat that is dissipated through the rotor cooling slats.

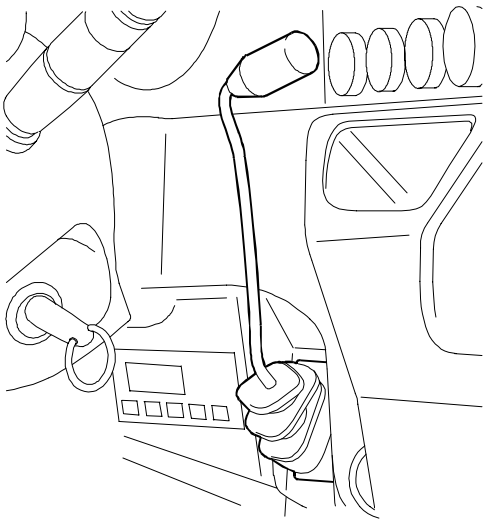

73715

IV.201 RETARDER CONTROL

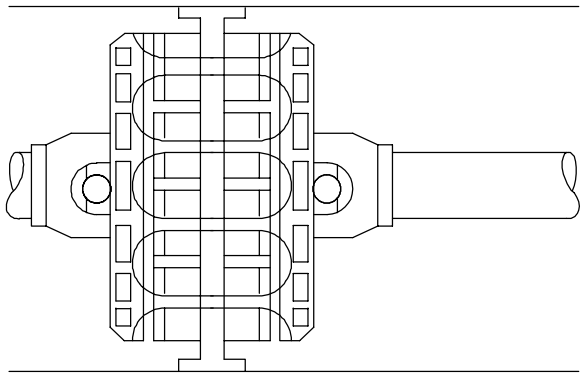

73733

IV.202 TELMA RETARDER

The control is fed via the ABS system relay.

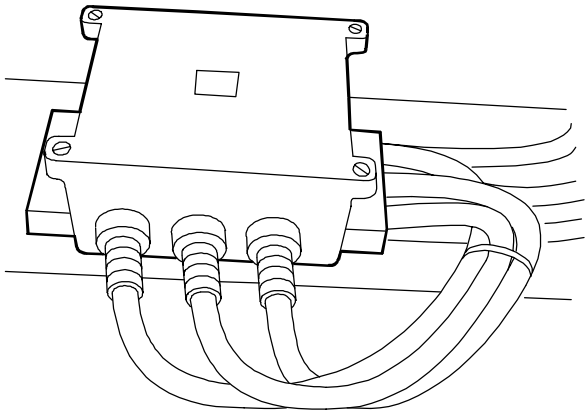

73714

IV.203 REMOTE CONTROL UNIT

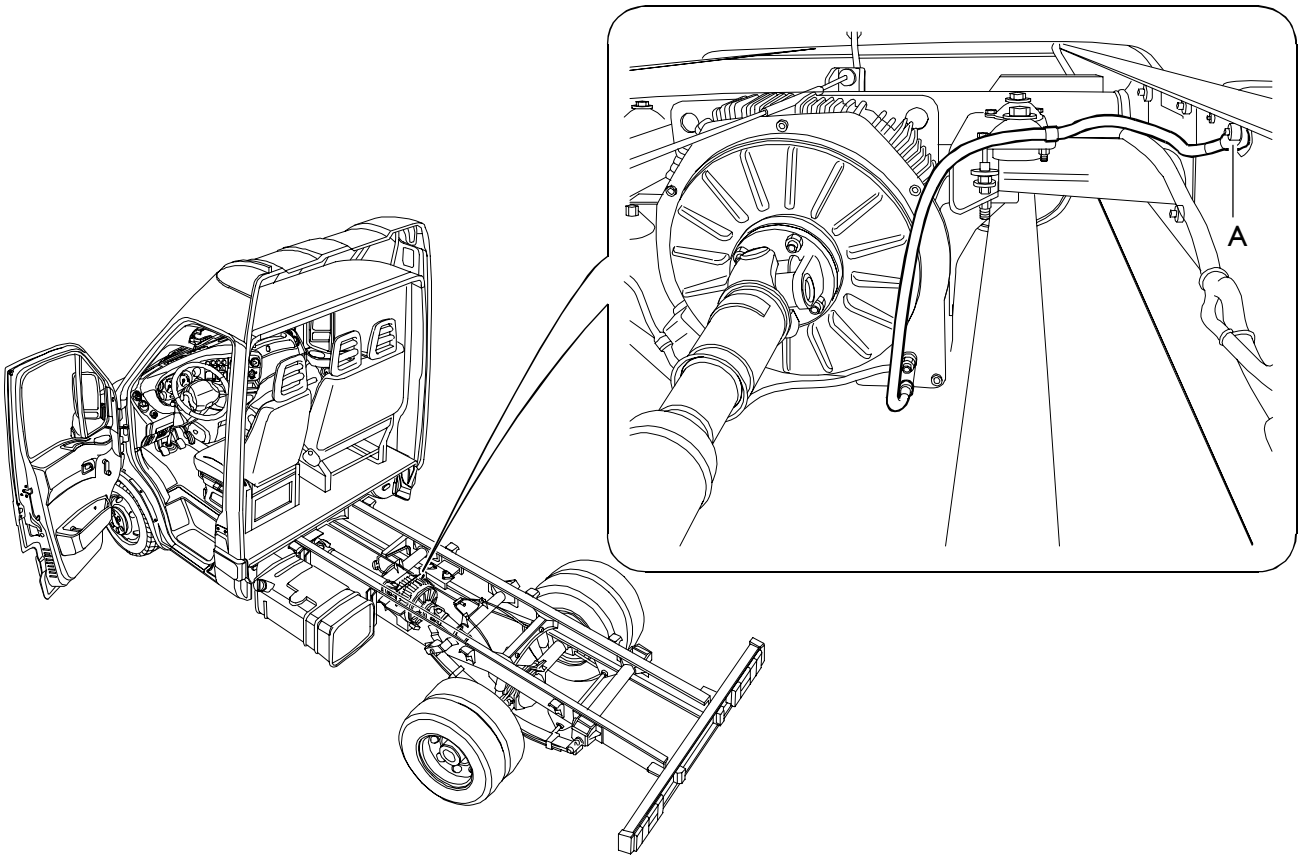

73713

IV.204 ELECTRO MAGNETIC UNIT
A. FRAME MASS

The following are the various views of the retarder control.

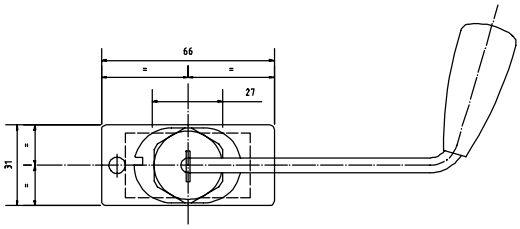

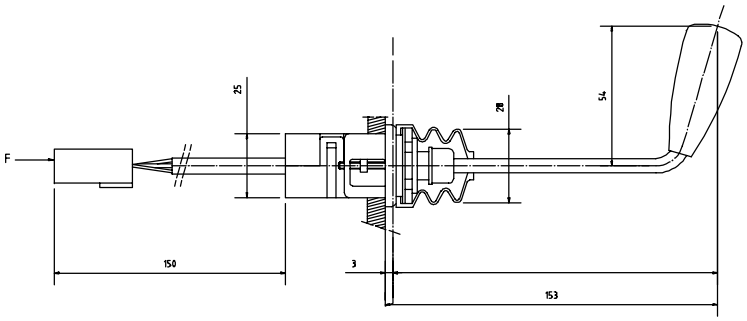

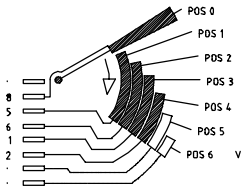

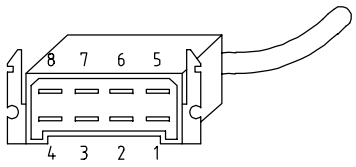

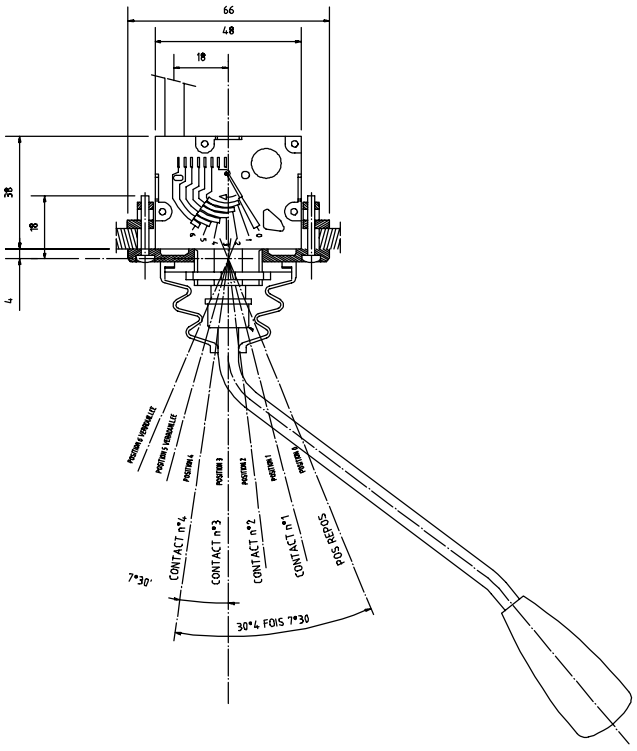

Technical features
Torque 7 Nm ± 20%
Rated operating torque 0.6 Nm
Maximum torque 5 Nm
Operating voltage 32 V dc
Rated current 1A
Insulating resistance 1M Ω under 500 V dc
Cross-through resistance 0.10 Ω (0 / 20%)
Operating temperature -40°C + 70°C

VARIABLE GEOMETRY TURBO COMPRESSOR VGT

Description

The over supply system consists of an air filter, a turbo compressor and the intercooler.
The dry type air filter consists of a periodically replaceable filtering cartridge.
The turbo compressor uses the energy of engine exhaust gases to send air under pressure to the cylinders.
It essentially consists of:

- a central body housing a shaft supported by bushings at whose opposite ends the turbine and compressor impellers are mounted;
- a turbine and a compressor mounted at the ends of the central body;
- an over-pressure adjustment valve applied to the turbine body, to partialize exhaust gas output and send part directly to the exhaust pipe when oversupply pressure downstream the compressor reaches its rated value;
- the intercooler consists of a radiator applied to the engine coolant radiator, to reduce turbo compressor out put air temperature to the cylinders.

When improper engine operation is detected as due to the oversupply system, the turbo compressor should be checked first, then seals and connection sleeves inspected followed by suction piping, air filter or radiator clogging control. If turbo compressor defects are due to improper lubrication, check that oil piping is neither interrupted nor clogged, in which case replace to correct the deficiency.

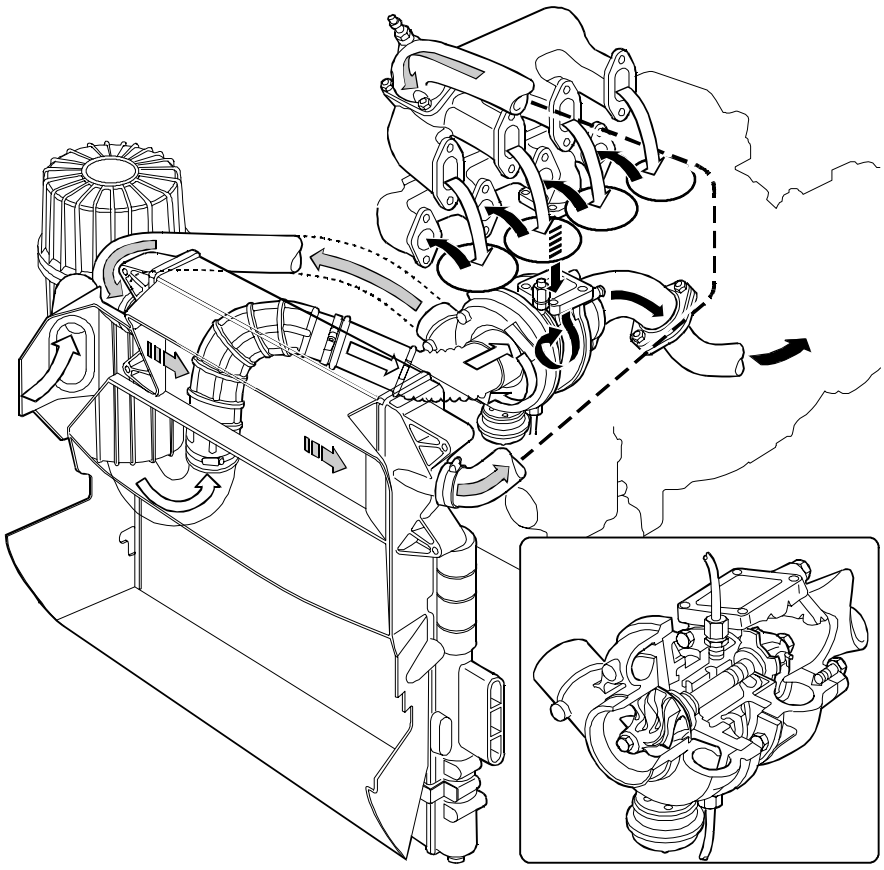

52174

IV.205 OVERSUPPLY DIAGRAM

Exhaust gas kinetic energy depends on engine rpm; the lower such rpm, the greater the exhaust gas kinetic energy entering the conventional turbine, making it rotate slowly and supplying low oversupply pressure.

Input gas kinetic energy in the VGT remains high, as slats are mobile and when fully closed reduced input gas cross-section and cause increased turbo compressor speed.

The MS6.3 electronic center modulates gradual mobile slat opening according to engine rpm by using the vacuum inside the braking circuit, via the proportional electro valve that controls actuator opening.

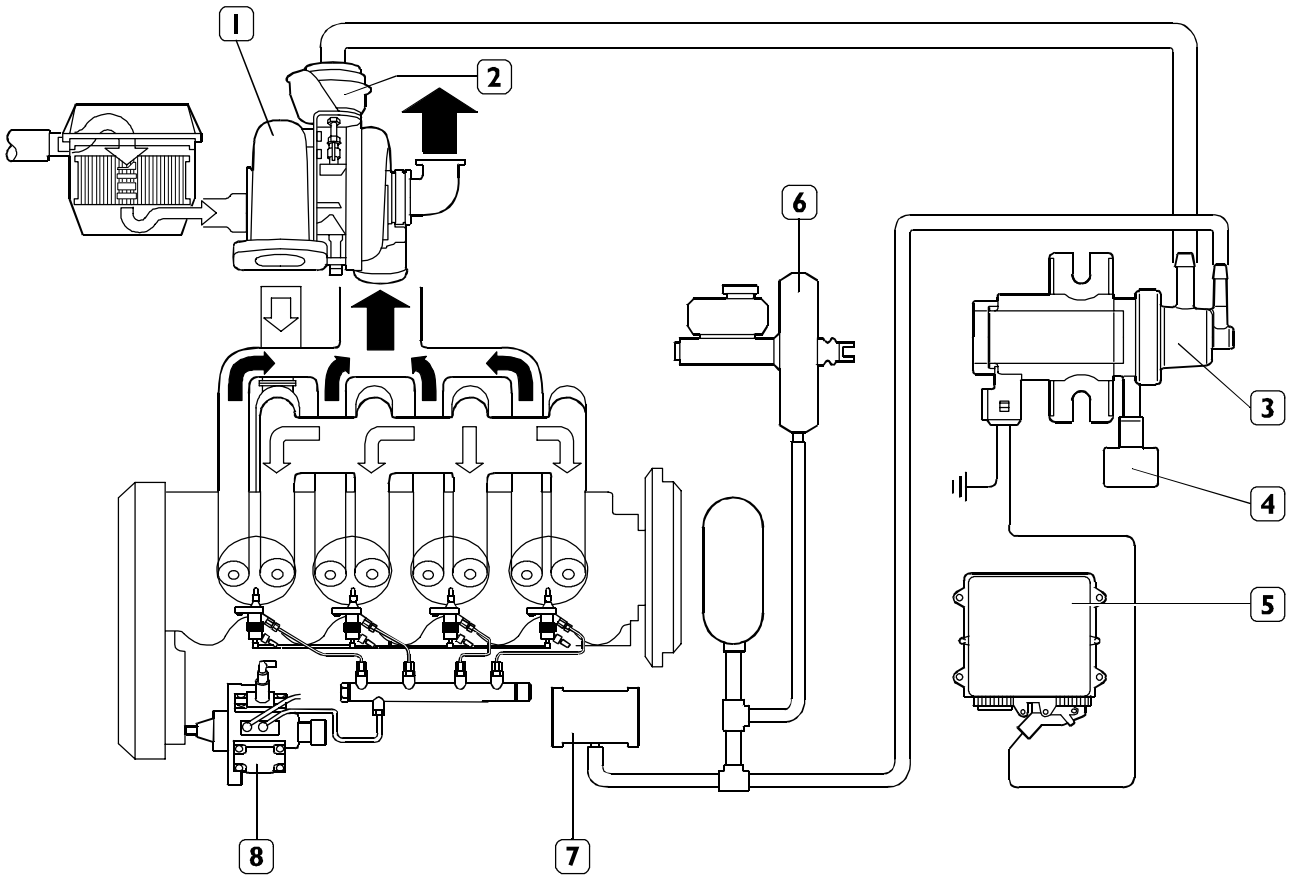

001027t

IV.206 OVERSUPPLY DIAGRAM

CIRCUIT CHARTS

		Page
NOTES AND SPECIFICATIONS		5
CHART 1:	START	7
CHART 1B:	START (.10 - .12)	8
CHART 2A:	PREHEATING (.9)	9
CHART 2B:	PREHEATING (.11)	10
CHART 2C:	WARMING (.13 - .15)	11
CHART 2D:	WARMING (.10 - .12)	12
CHART 2E:	PRE-HEATING (.10 - .12 - EDC16)	12/1
CHART 3:	RECHARGE	13
CHART 4:	INSTRUMENTS	14
CHART 5:	TACHOMETER	15
CHART 6A:	RPM COUNTER (.9)	16
CHART 6B:	RPM COUNTER (.11)	17
CHART 6C:	GYROMETER (.10 - .12 - .13 - .15)	18
CHART 7A:	OPTICAL INDICATORS (.9 - .11)	19
CHART 7B:	OPTICAL INDICATORS (.10 - .12 - .13 - .15)	20
CHART 8:	OUTSIDE LIGHTING (cab instruments)	21
CHART 9A:	OUTSIDE LIGHTING (position lights)	22
CHART 9B:	OUTSIDE LIGHTING (cab position lights van)	23
CHART 10:	FLOOD AND DIPPED LIGHTS	24
CHART 11A:	BACK AND FRONT FOG LIGHTS	25
CHART 11B:	BACK AND FRONT FOG LIGHTS (van)	26
CHART 12:	FRONT LIGHT SETTING	27
CHART 13A:	DIRECTION AND EMERGENCY LIGHTS	28
CHART 13B:	DIRECTION AND EMERGENCY LIGHTS (van)	29
CHART 14A:	STOP LIGHTS	30
CHART 14B:	STOP LIGHTS (van)	31
CHART 15A:	BACKUP LIGHTS	32

Print 603.43.371/A

Base - 4th Ed. - May 2002
Revi - May 2003

		Page
CHART 15B:	BACKUP LIGHTS (van)	33
CHART 16:	HORN	34
CHART 17:	WINDSCREEN AND FRONT LIGHT WASHER	35
CHART 18A:	WINDSCREEN DEFROSTER	36
CHART 18B:	WINDSCREEN DEFROSTER (.10 - .12)	37
CHART 19:	RADIO SET	38
CHART 20A:	INTERNAL LIGHTING AND CIGARETTE LIGHTER	39
CHART 20B:	INTERNAL LIGHTING (van)	40
CHART 20C:	INTERNAL LIGHTING 6+1 VEHICLE	41
CHART 20D:	INTERNAL LIGHTING AND CIGARETTE LIGHTER (.10 - .12)	42
CHART 21A:	IMMOBILIZER (.9)	43
CHART 21B:	IMMOBILIZER (.11)	44
CHART 21C:	IMMOBILIZER (.10 - .12 - .13 - .15)	45
CHART 22A:	DIAGNOSIS CONNECTION (.9 - .11)	46
CHART 22B:	DIAGNOSIS CONNECTION (.10 - .12 - .13 - .15)	47
CHART 23A:	ENGINE COOLING (.9)	48
CHART 23B:	ENGINE COOLING (.11)	49
CHART 23C:	ENGINE COOLING (.13 - .15)	50
CHART 23D:	ENGINE COOLING (.10 - .12)	51
CHART 23E:	ENGINE COOLING (.10 - .12 - EDC16)	51/1
CHART 24A:	EGR/EXHAUST GAS ELECTRONIC CONTROL SYSTEM (.9)	52
CHART 24B:	EGR/EXHAUST GAS ELECTRONIC CONTROL SYSTEM FOR EDC (.13)	53
CHART 24C:	EGR/EXHAUST GAS ELECTRONIC CONTROL SYSTEM FOR EDC (.10 - .12)	54
CHART 24D:	EGR EXHAUST GAS ELECTRONIC CONTROL SYSTEM FOR EDC (.10 - .12 - EDC16)	54/1
CHART 25A:	SPARK LEAD VARIATOR (.9)	55
CHART 25B:	SPARK LEAD VARIATOR (.11)	56
CHART 26A:	E.D.C. (.13)	57
CHART 26B:	E.D.C. WITH VGT (.15)	58
CHART 26C:	E.D.C. WITH WASTE GATE (.13)	59

		Page
CHART 26D:	E.D.C. WITHOUT EGR (.10 - .12)	60
CHART 26E:	E.D.C WITHOUT EGR (.10 - .12 - EDC16)	60/1
CHART 27A:	HEATED FUEL FILTER (.9 - .11) / OPT 2287	61
CHART 27B:	HEATED FUEL FILTER (.13 - .15)	62
CHART 27C:	HEATED FUEL FILTER (.10 - .12)	63
CHART 27D:	HEATED FUEL FILTER (.10 - .12 - EDC16)	63/1
CHART 28A:	POWER WINDOW OPERATOR AND PASSENGER SIDE / OPT 693	64
CHART 28B:	POWER WINDOW OPERATOR SIDE / OPT 4028	65
CHART 28C:	POWER WINDOW OPERATOR AND PASSENGER SIDE (.10 - .12)	66
CHART 29:	HEATED REARVIEW MIRRORS / OPT 697	67
CHART 30:	REARVIEW MIRROR ADJUSTMENT / OPT 2714	68
CHART 31:	HEATED WINDSCREEN / OPT 685	69
CHART 32:	HEATED REAR WINDOW / OPT 6815	70
CHART 33:	ABS/EBD/ABD / OPT 2091	71
CHART 34A:	E.C.A.S. WITHOUT RESERVE AIR RESERVOIR (.9 - .10 - .11 - .12 - .13)	72
CHART 34B:	E.C.A.S. WITH RESERVE AIR RESERVOIR (.9 - .10 - .11 - .12 - .13)	73
CHART 34C:	VB TECHNIEK (35C - 40C - 45C - 50C)	74
CHART 34D:	VB TECHNIEK (60C - 65C)	74/1
CHART 35A:	AUTOMATIC CONDITIONER (.9) / OPT 6650	75
CHART 35B:	AUTOMATIC CONDITIONER (.11) / OPT 6650	76
CHART 35C:	AUTOMATIC CONDITIONER (.13 - .15) / OPT 6650	77
CHART 35D:	AUTOMATIC CONDITIONER (.9 - .10 - .11 - .12 - .13 - .15) / OPT 6650	78
CHART 35E:	AUTOMATIC CONDITIONER (.10 - .12) / OPT 6650	79
CHART 35F:	AUTOMATIC AIR CONDITIONING (.10 - .12 - EDC16)	79/1
CHART 36:	ELECTRONIC TACHOGRAPH / OPT 5130 - 5131	80

		Page
CHART 37A:	AIR BAG AND PRE-TENSIONERS OPT 4495 - 4496	81
CHART 37B:	AIR BAG AND PRE-TENSIONERS	82
CHART 38:	DOOR LOCK WITH ANTI-THEFT / OPT 6890	83
CHART 39A:	FRONT DIFFERENTIAL LOCK / OPT 131	84
CHART 39B:	REAR DIFFERENTIAL LOCK / OPT 131	85
CHART 40:	13-POLE POWER CONNECTION / OPT 6520	86
CHART 41A:	TOTAL PTO (.9 - .11)	87
CHART 41B:	TOTAL PTO (.10 - .12 - .13 - .15)	88
CHART 42A:	HEATED OPERATOR SEAT BUS VERSION / OPT 6628	89
CHART 42B:	HEATED SEATS / OPT 6644	90
CHART 43:	DAY LIGHTS FOR NORTHERN EUROPE VEHICLES / OPT 2536	91
CHART 44:	DOOR LOCK / OPT 6536	92
CHART 45A:	TELMA SCUDATI RETARDER (.9 - .11) / OPT 235	93
CHART 45B:	TELMA RETARDER (.10 - .12 - .13 - .15) / OPT 235	94
CHART 46:	ELECTRICAL BATTERY SECTIONER / OPT 2532	95
CHART 47:	SCUDATI CRUISE CONTROL / OPT 2463	96
CHART 48:	ENGINE WATER HEATER / OPT 6654	97
CHART 49:	ELECTRICAL CONTROL SLIDING SIDE DOOR / OPT 9/12	98
CHART 50:	ROTATING SLIDING DOOR / OPT 9/12	99
CHART 51:	ELECTRICAL PIT ON PAVILION / OPT 640	100
CHART 52:	SCUDATI CENTRAL EMERGENCY CONTROL / OPT 2546	101
CHART 53:	SYSTEM FOR NORTH AFRICA VEHICLES	102
CHART 54:	SYSTEM FOR BUS VEHICLES WITH 2-TONE HORN	103
CHART 55:	SYSTEM FOR RIGHT HAND DRIVE ROTATING SLIDING DOOR VEHICLES	104

NOTES AND SPECIFICATIONS

Unless otherwise specified the charts are to be considered valid for all engines and for all truck and van versions.

The vehicle conditions considered for laying wiring circuitries are:

- engine off
- ignition key off
- handbrake on
- gearbox in neutral
- fluids at normal level
- doors closed

The relays used have an internal resistance (in parallel with the coil) of 680 Ω to reduce over-voltage on the system due to switching of the switches.

In charts 22 A-B the component distinguished by the symbol ⧖ is the socket for the converter.

In chart 33 the connection distinguished by the symbol ▲ is valid only for vehicles with "parallel" braking system.

In chart 34B the component distinguished by the symbol Δ is present only on vehicles with reserve air tank.

Chart 38 shows a van with sliding side doors.

Component codes concerning chart 35D

1 Sensor on evaporator
2 Fan motor
3 Fan electronic control module
4 Air mixing gear motor
5 Re-circulation gear motor
6 Electronic climate control unit (82010)
7 Treated air sensor
8 Fan control potentiometer
9 Required temperature potentiometer
10 Climate control module
11 Microswitch for MAX DEF function
12 Control panel lighting

Colour codes for cabling not supplied by IVECO

Code	Colour	Code	Colour
A	Light Blue	M	Brown
B	White	N	Black
C	Orange	R	Red
G	Yellow	S	Rose
H	Grey	V	Green
L	Blue	Z	Purple

Chart 1A: Start

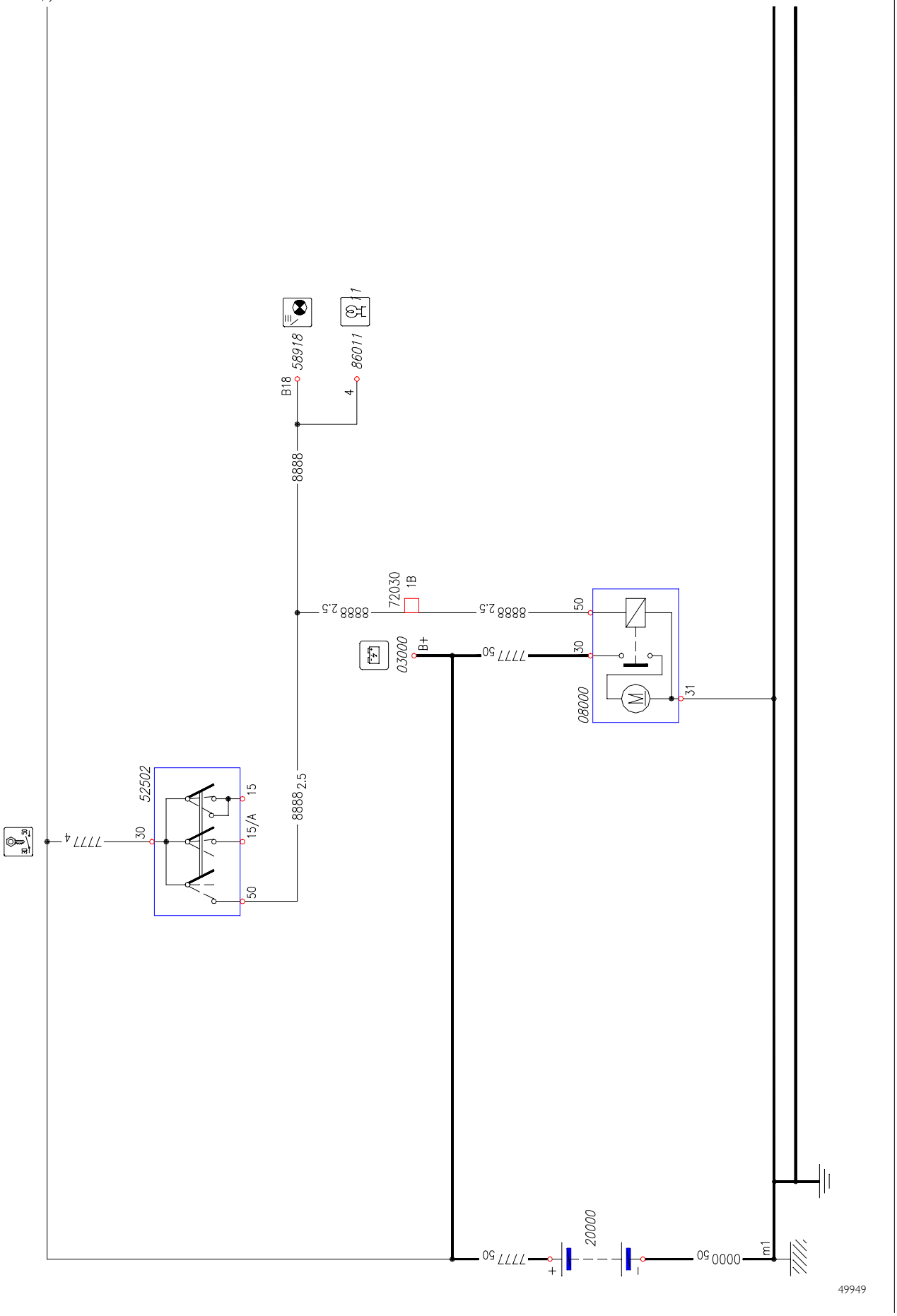

Chart 1B: Start (.10 - .12)

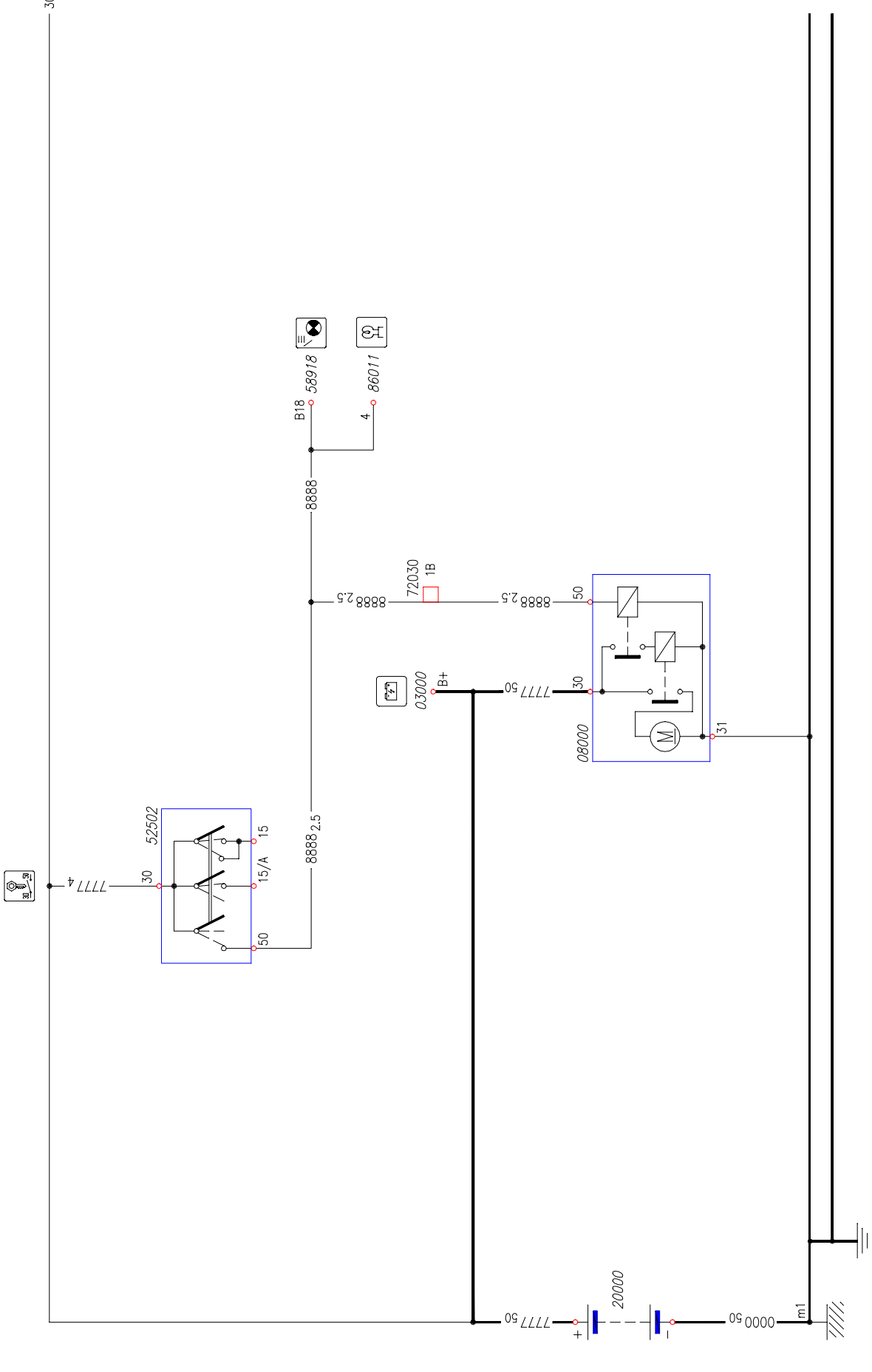

Chart 2A: Preheating (.9)

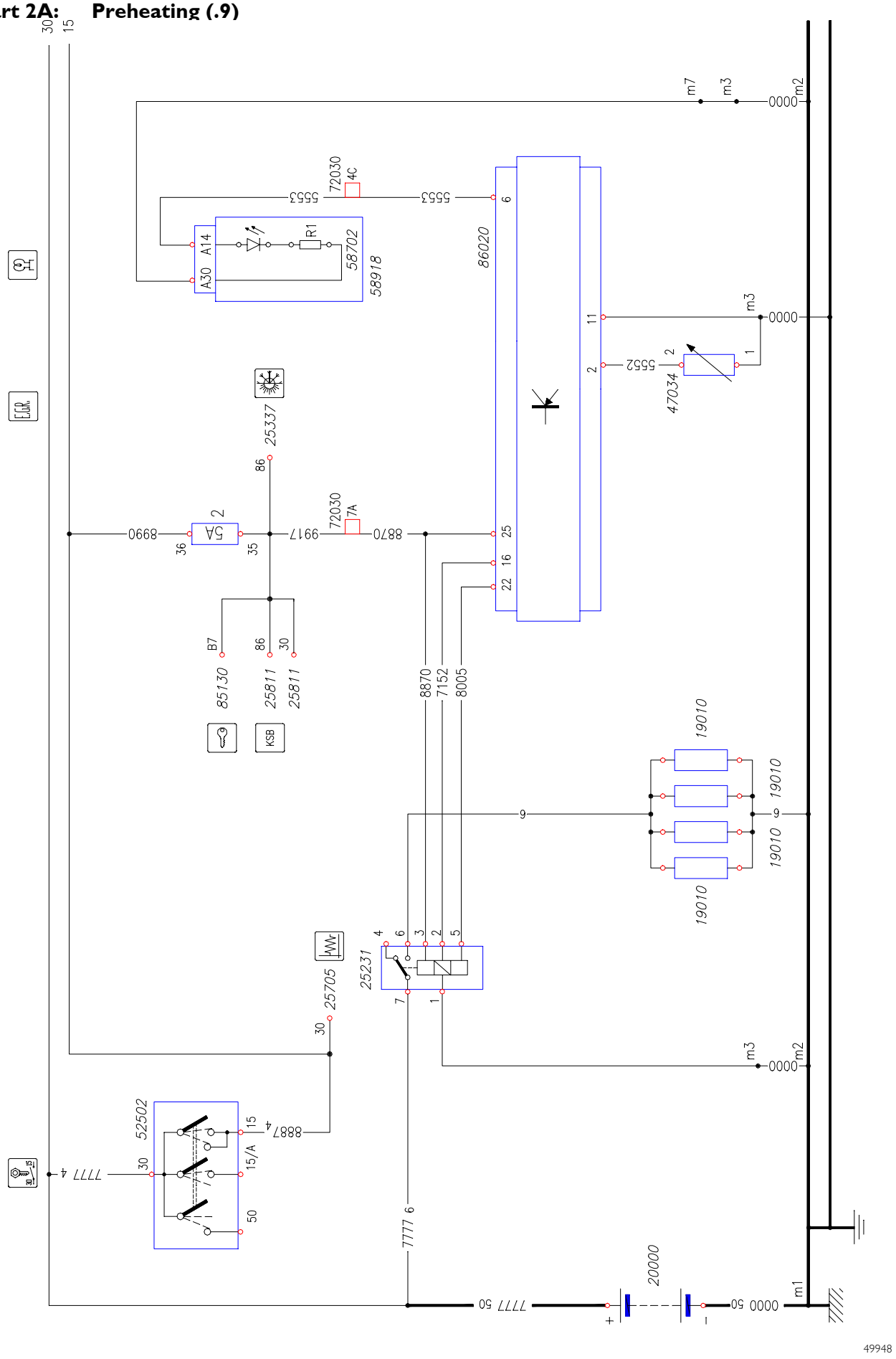

Chart 2B: Preheating (.11)

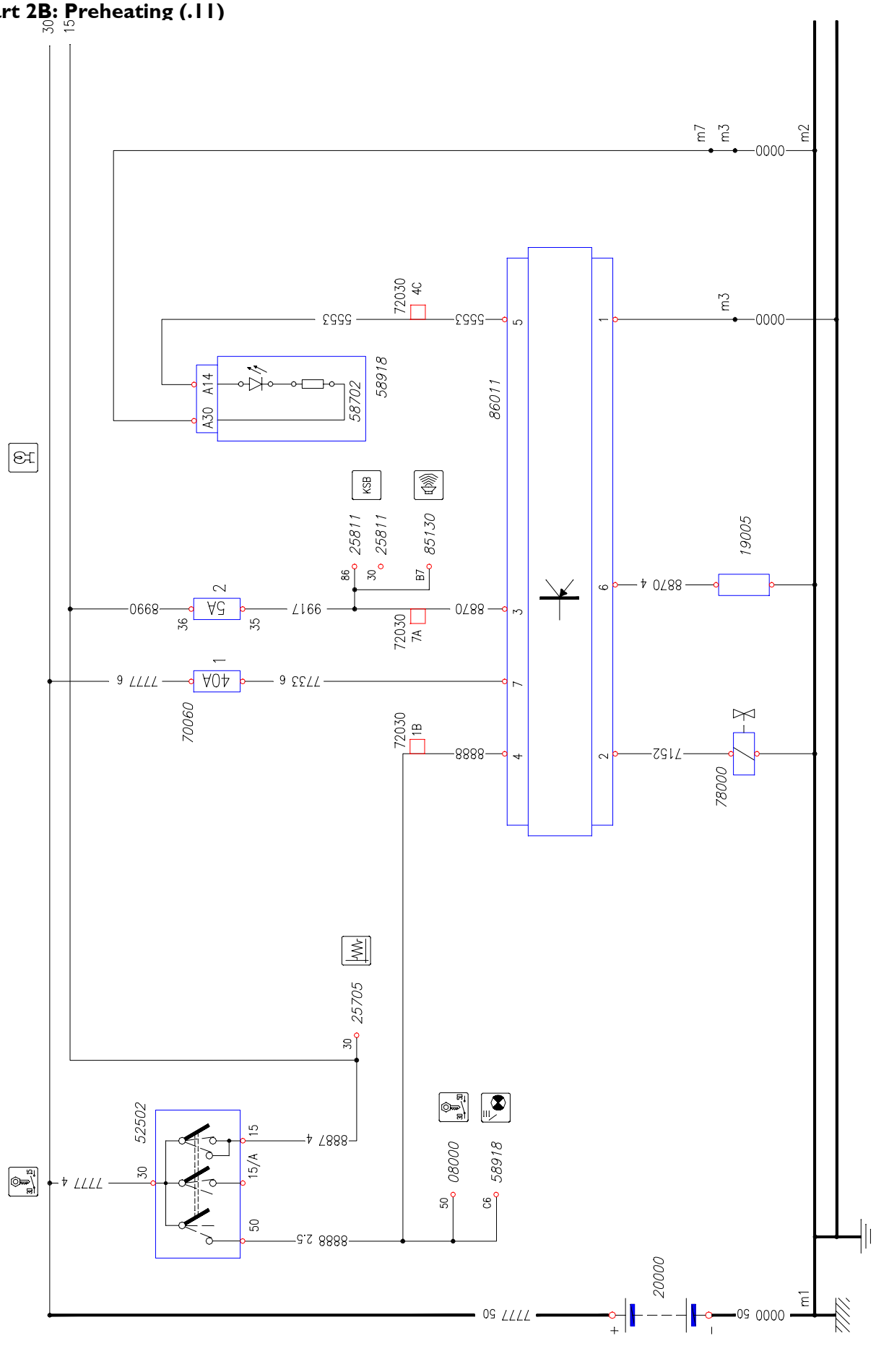

Chart 2C: Preheating (.13 - .15)

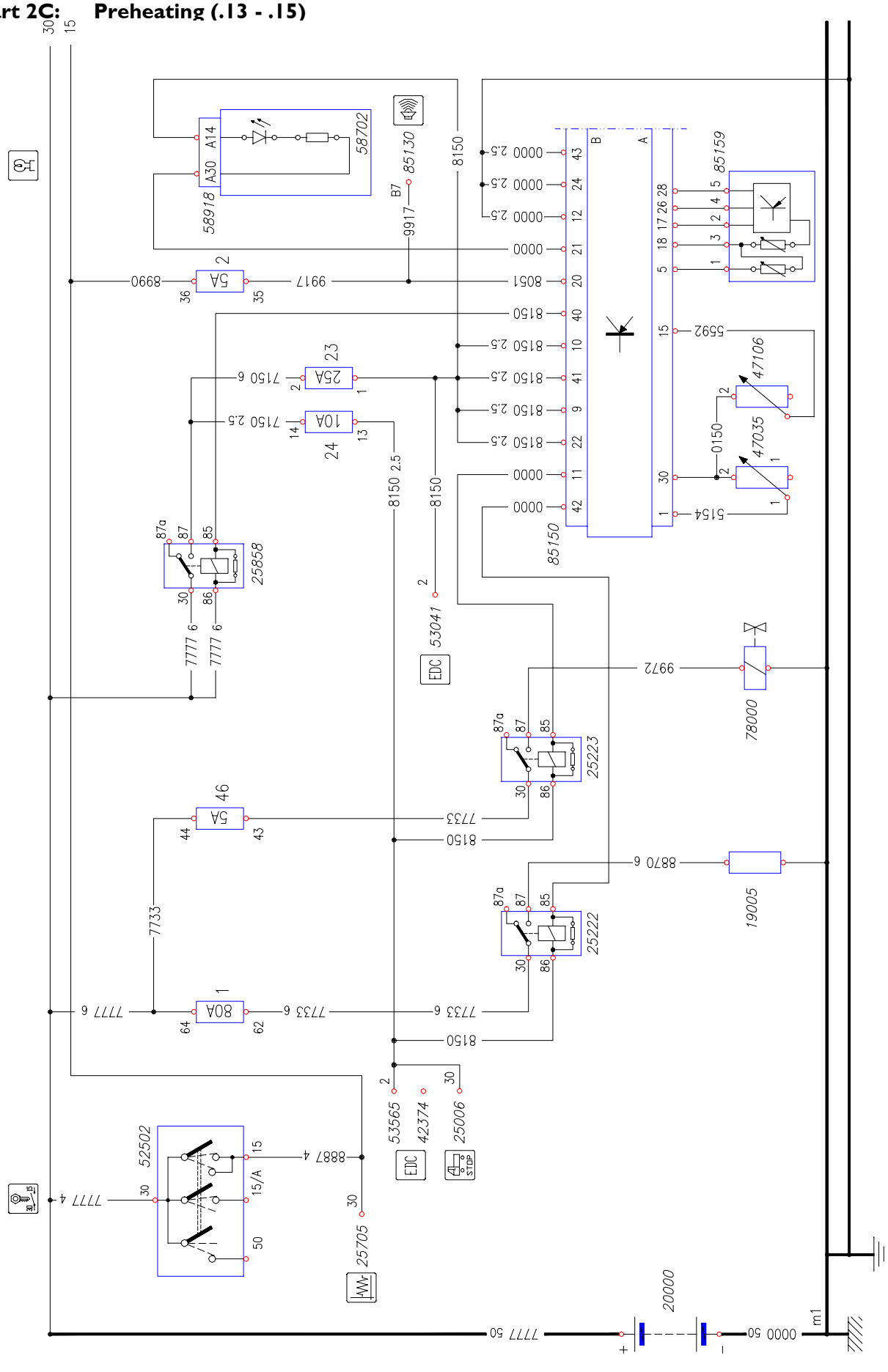

Chart 2D: Preheating (.10 - .12)

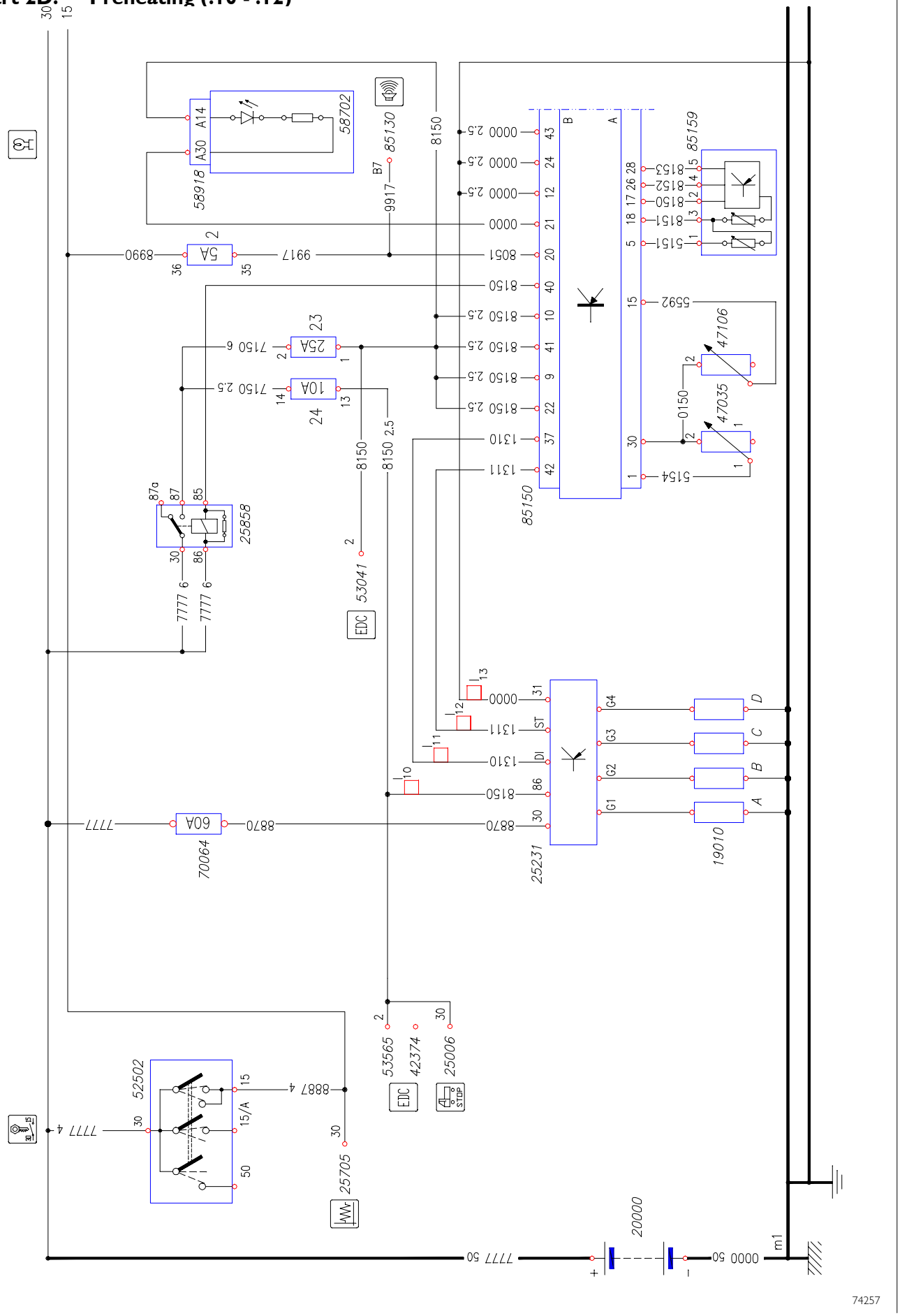

Chart 2E: Pre-heating (.10 - .12 - EDC16)

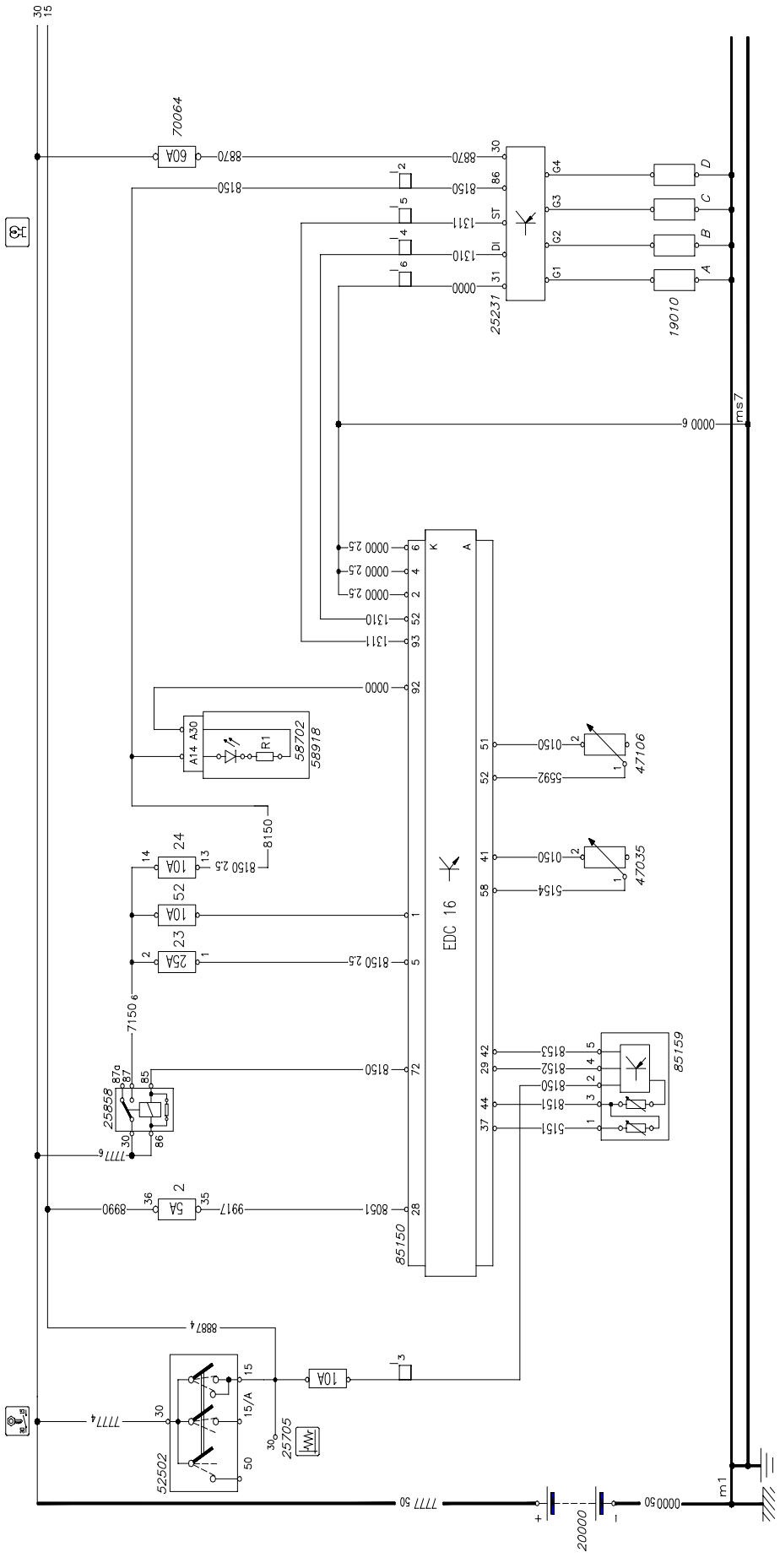

Chart 3: Recharge

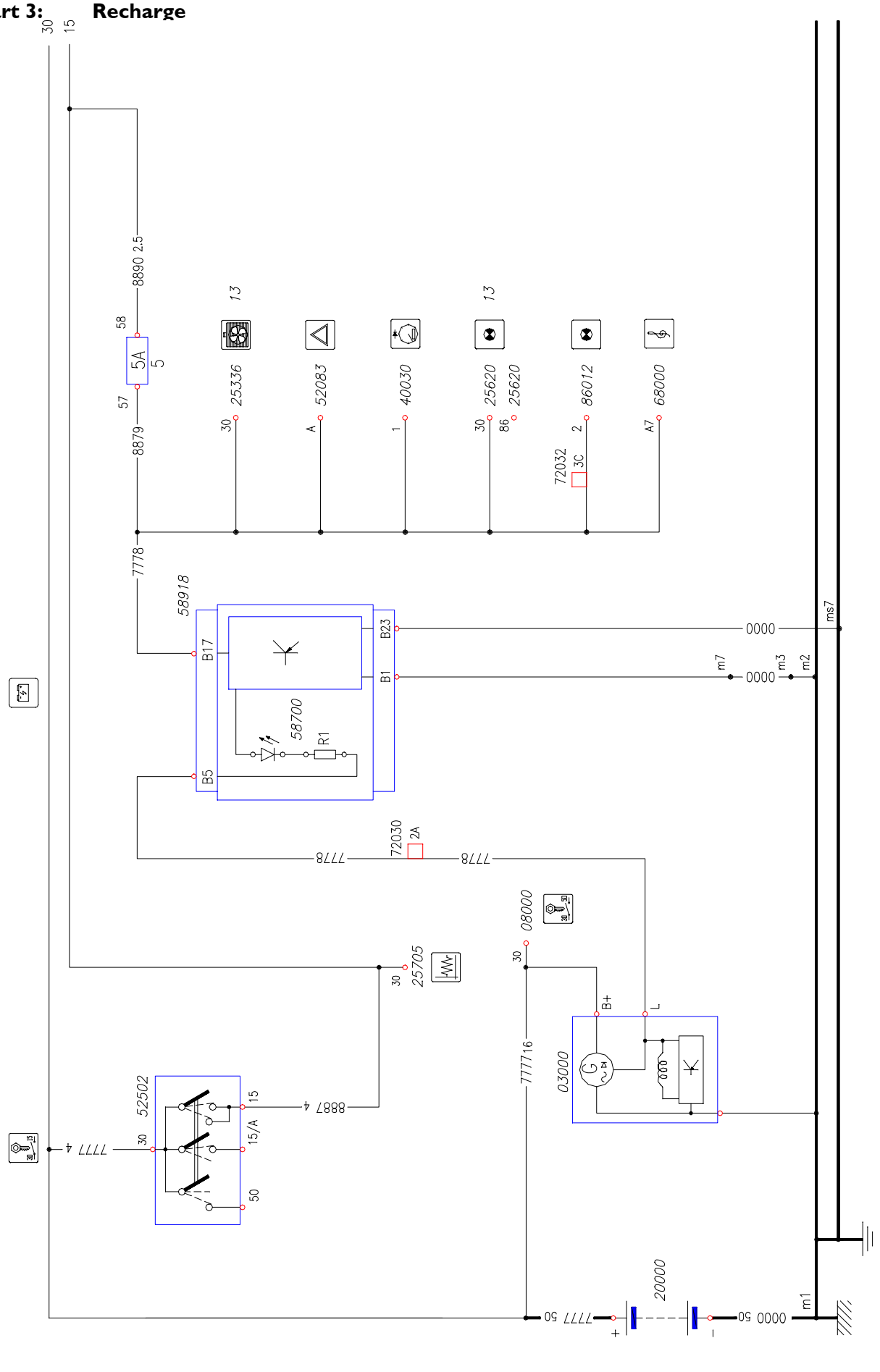

Chart 4: Instruments

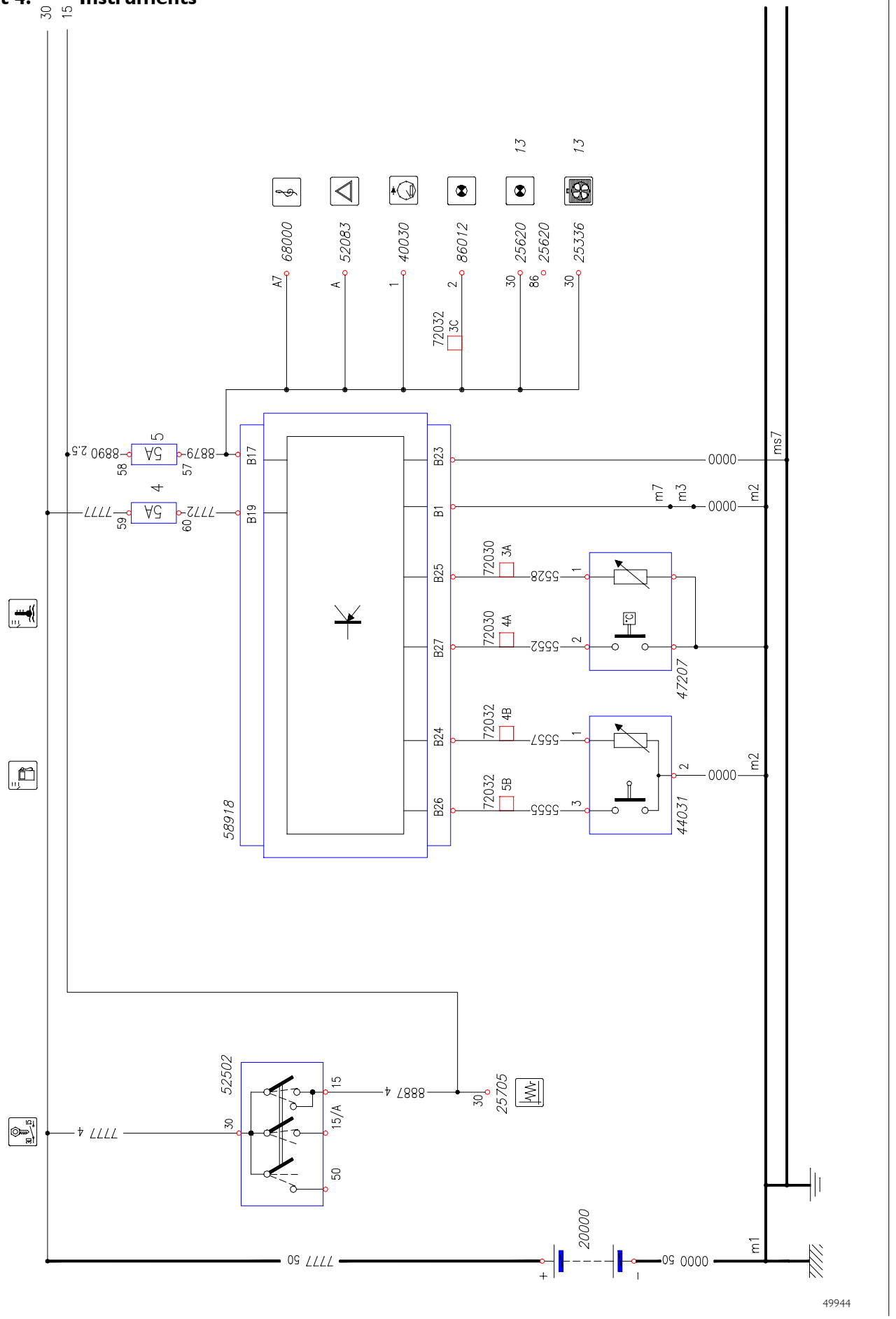

Chart 5: Tachometer

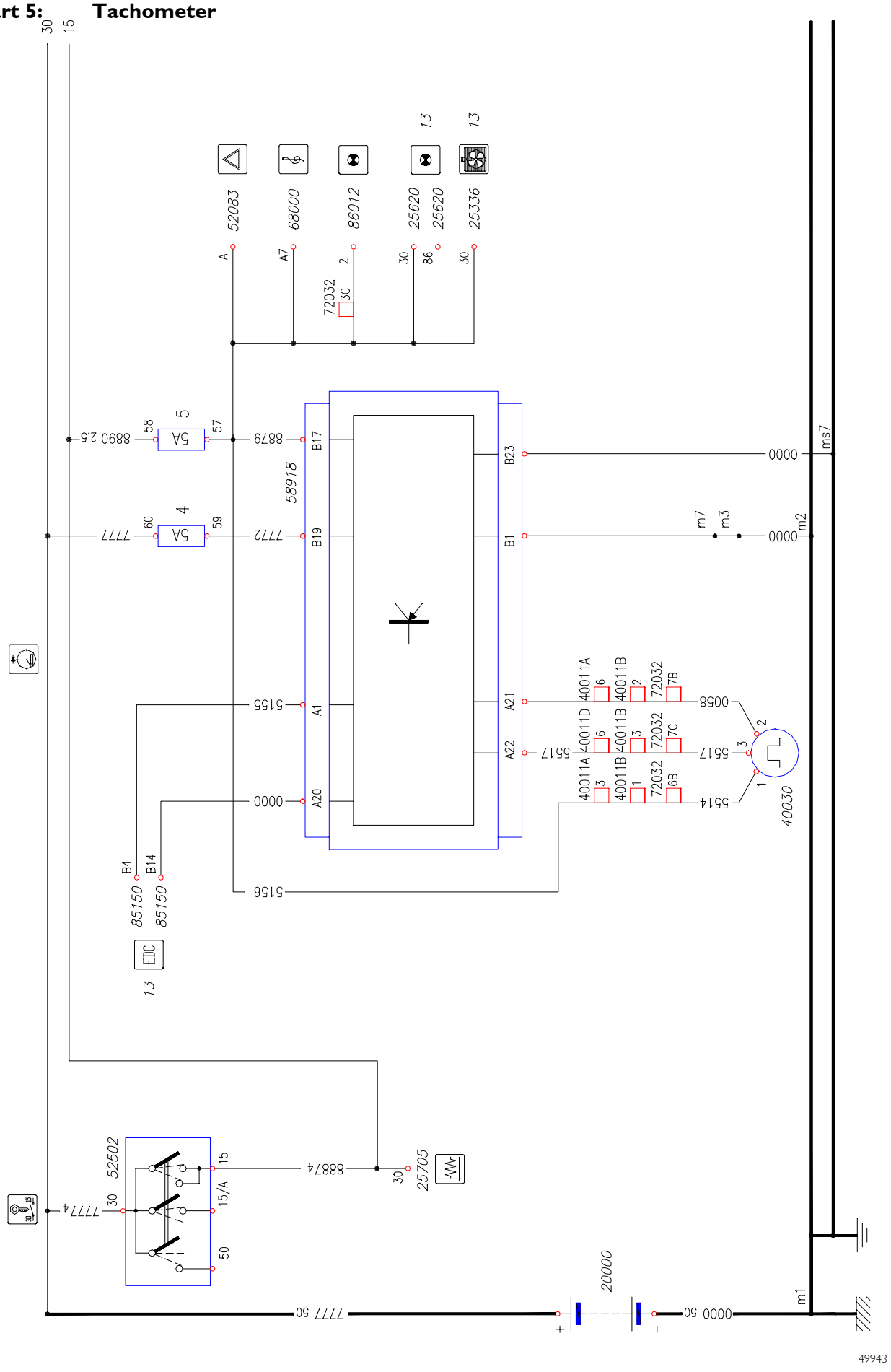

Chart 6A: Rpm counter (.9)

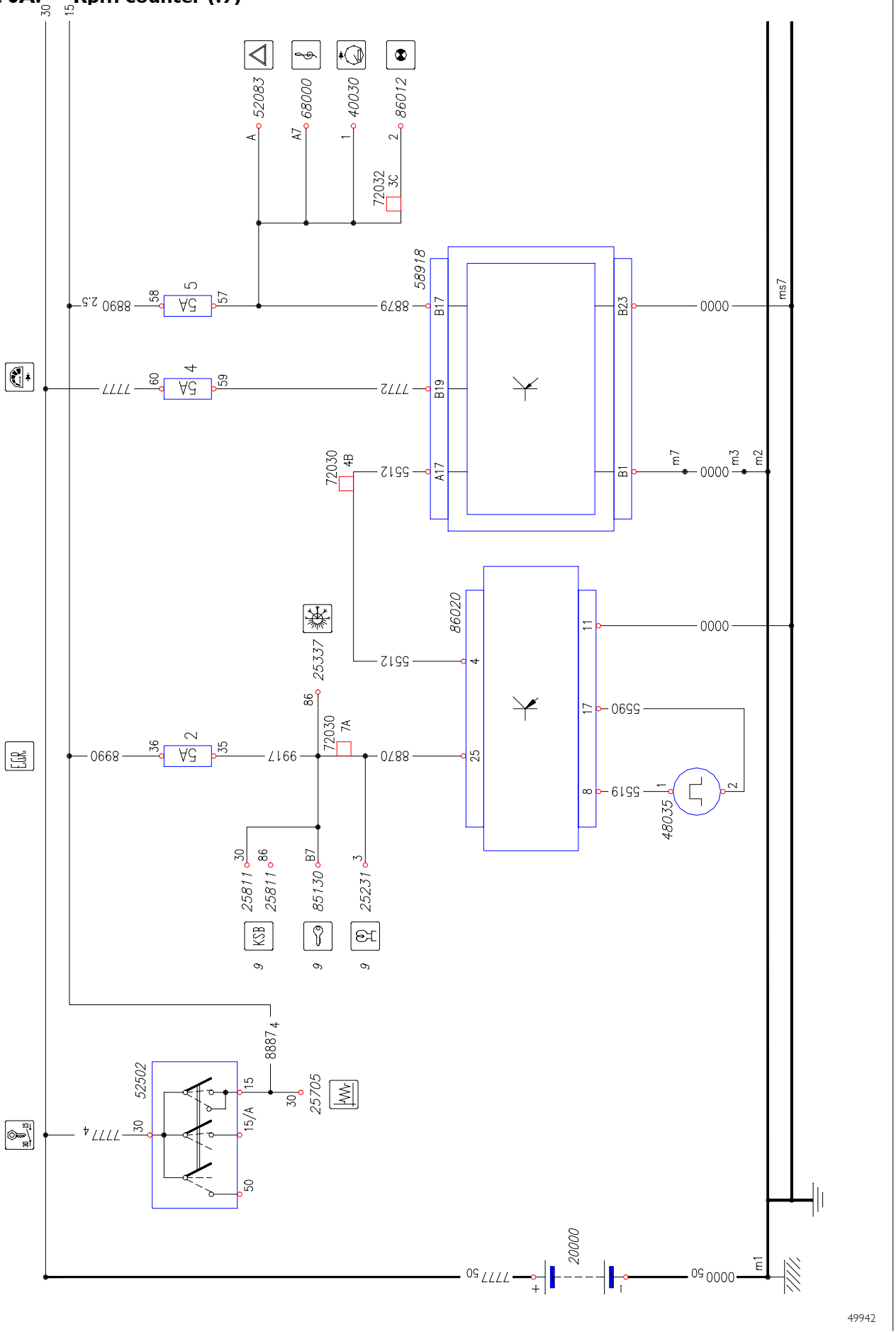

Chart 6B: Rpm counter (.11)

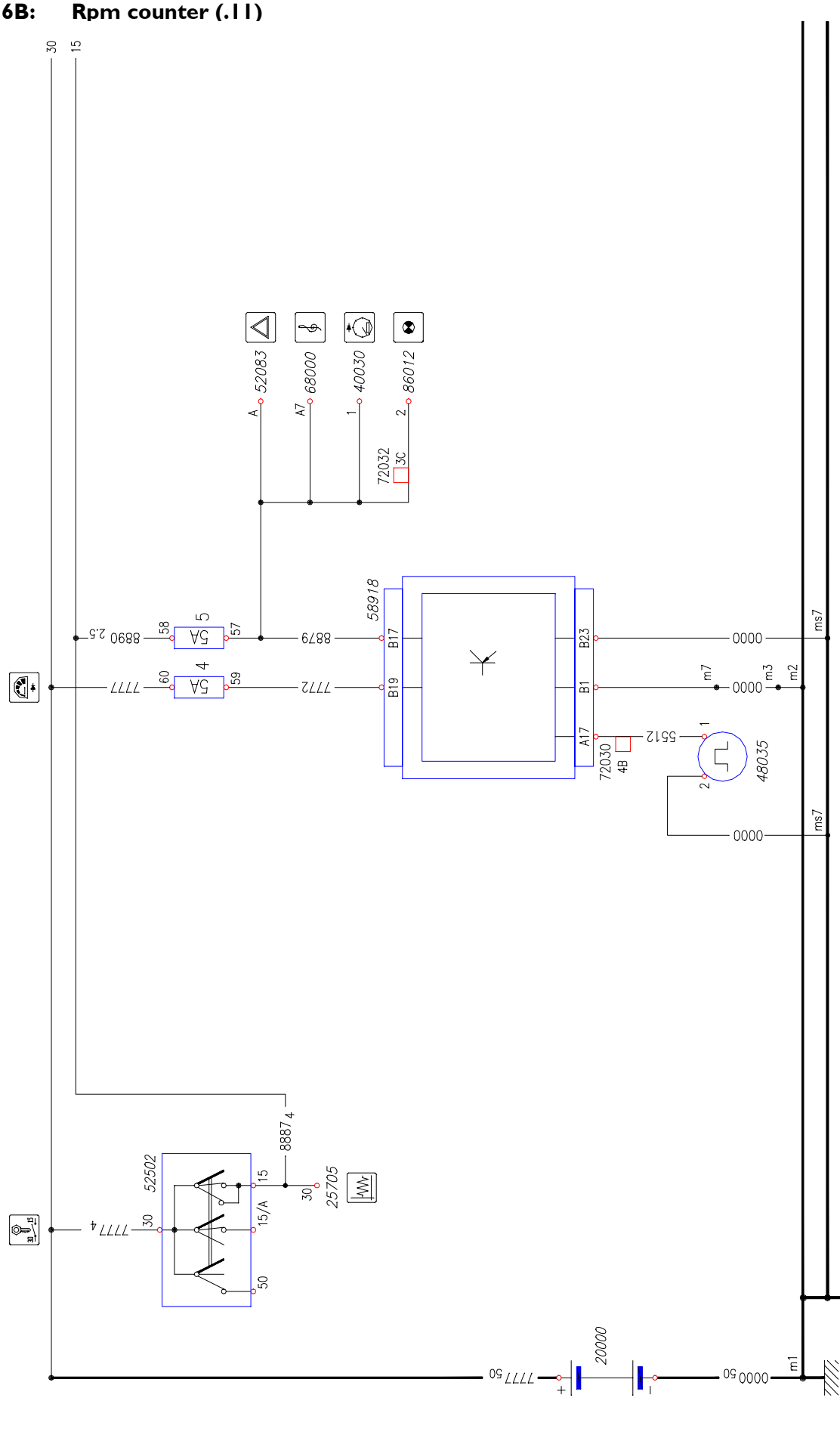

49941

Chart 6C: Rpm counter (.10 - .12 - .13 - .15)

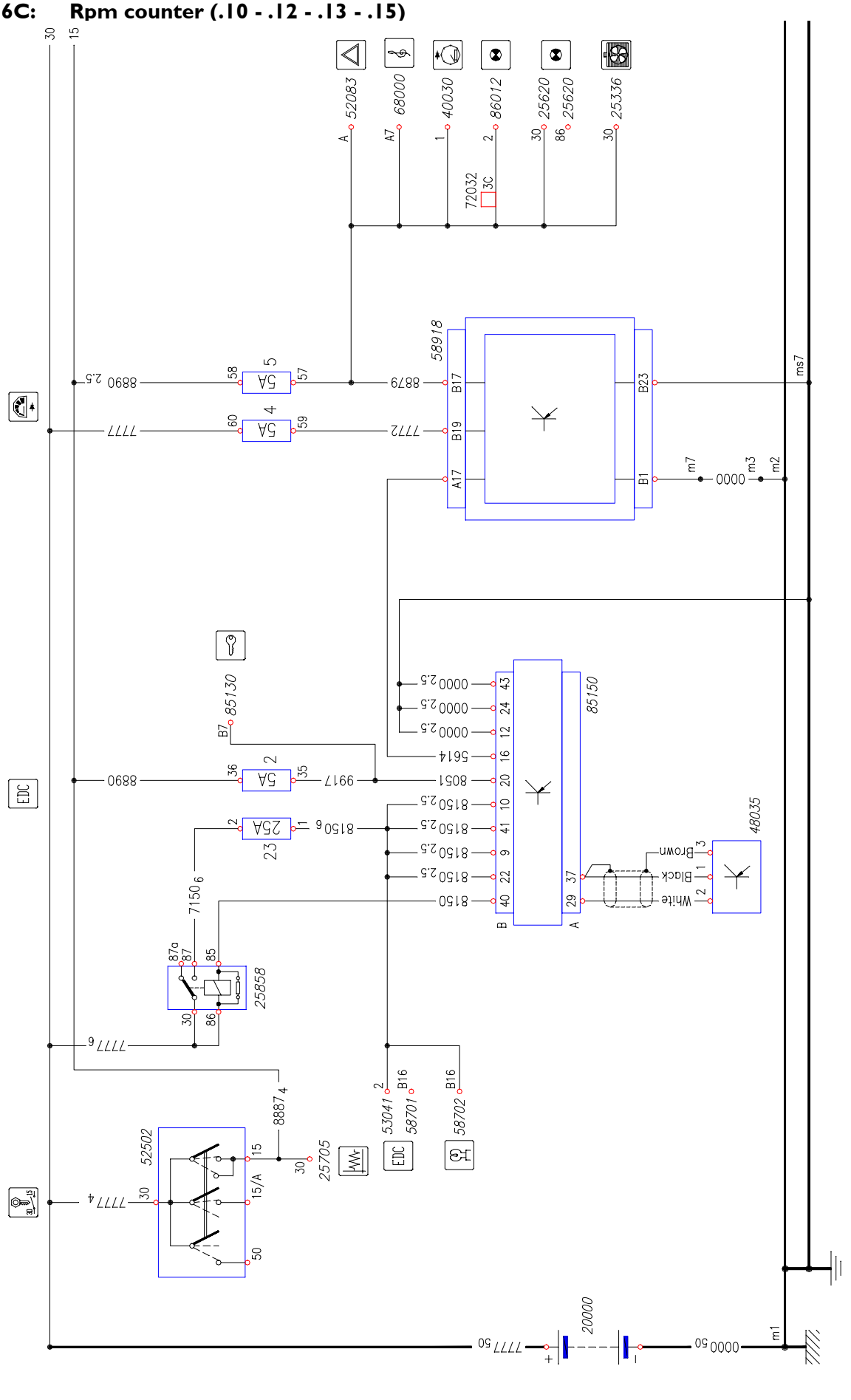

Chart 7A: Optical indicators (.9 - .11)

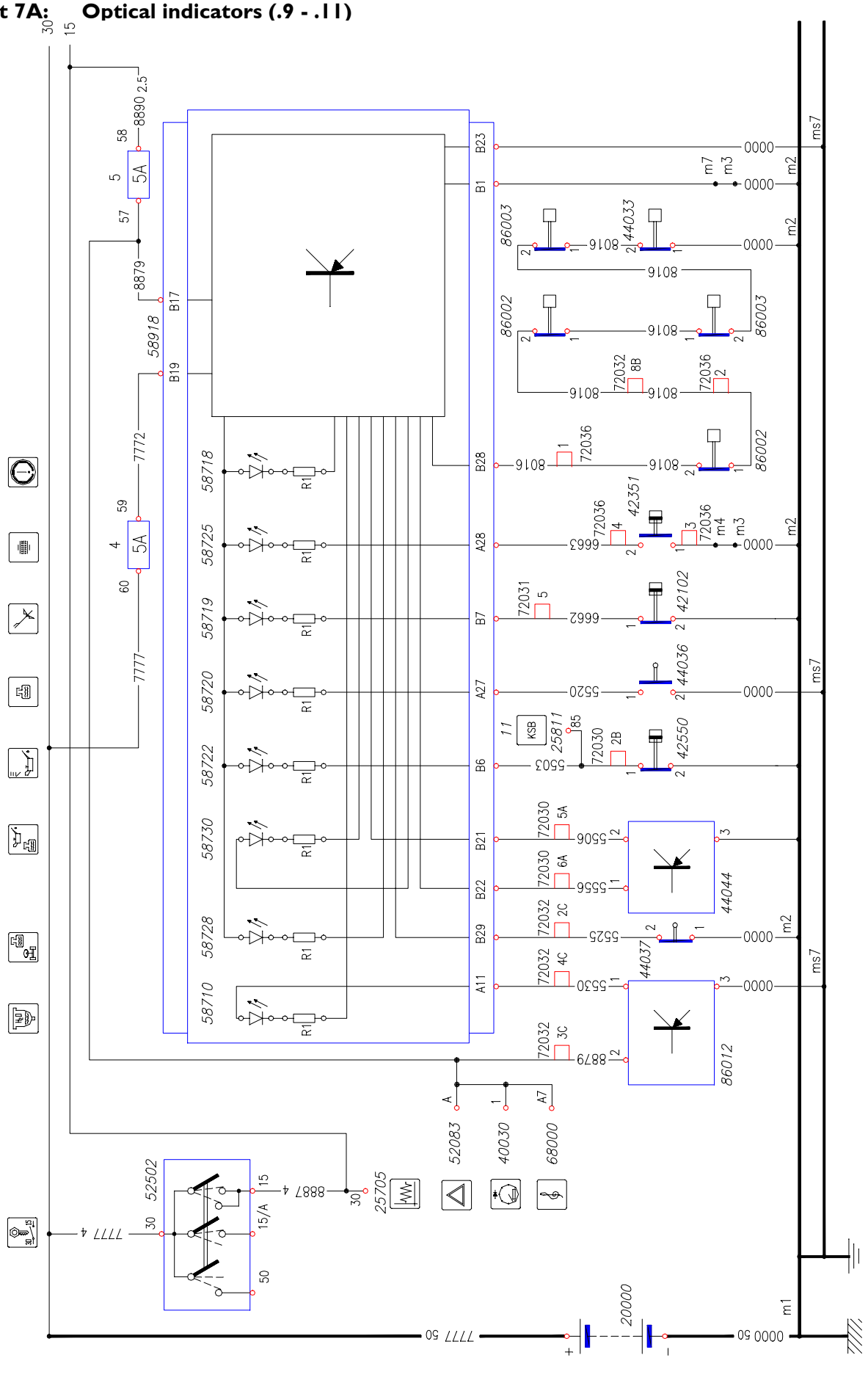

Chart 7B: Optical indicators (.10 - .12 - .13 - .15)

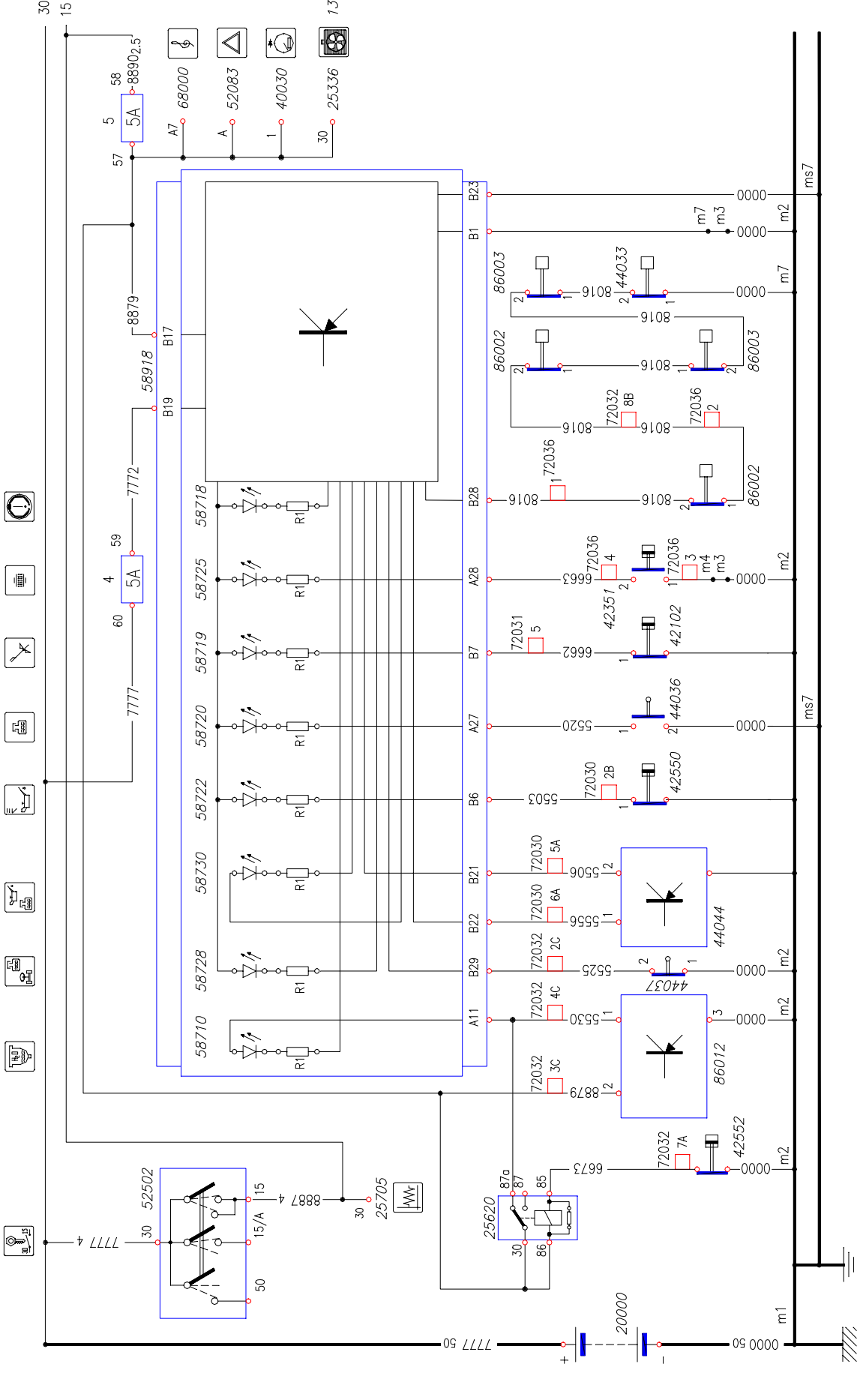

CHART 8: Outside lighting (cab instruments)

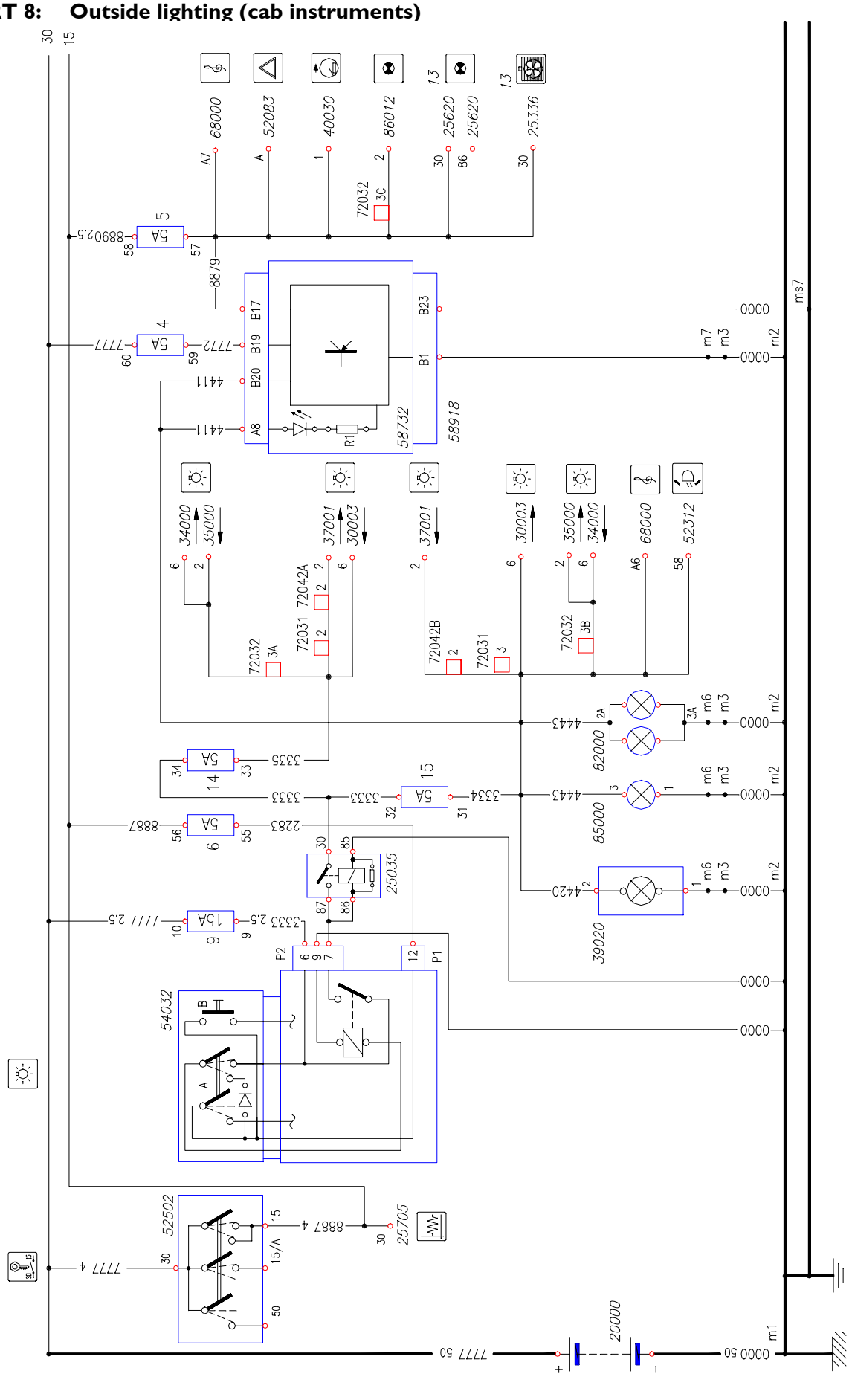

Chart 9A: Outside lighting (position lights)

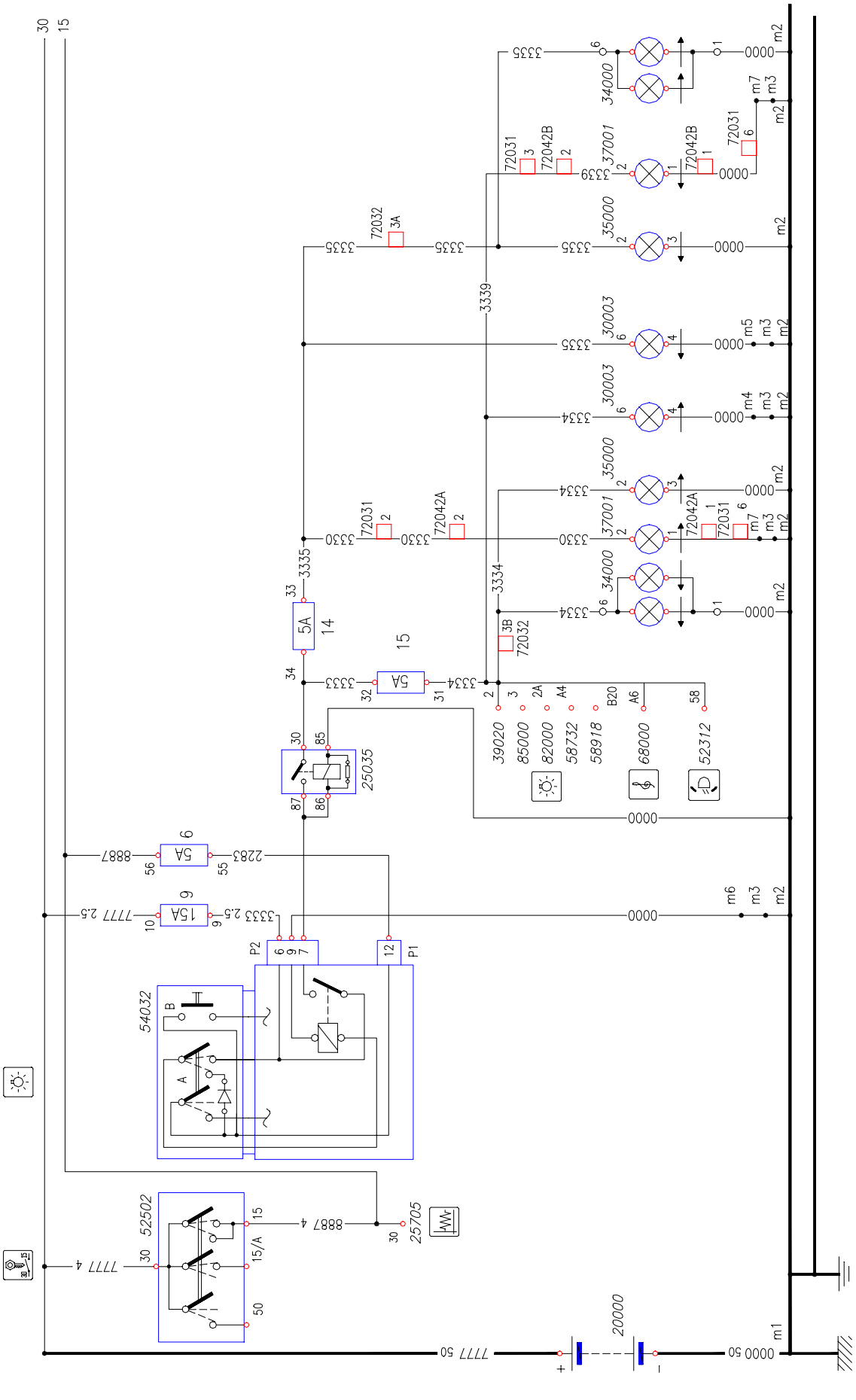

Chart 9B: Outside lighting (cab position lights van)

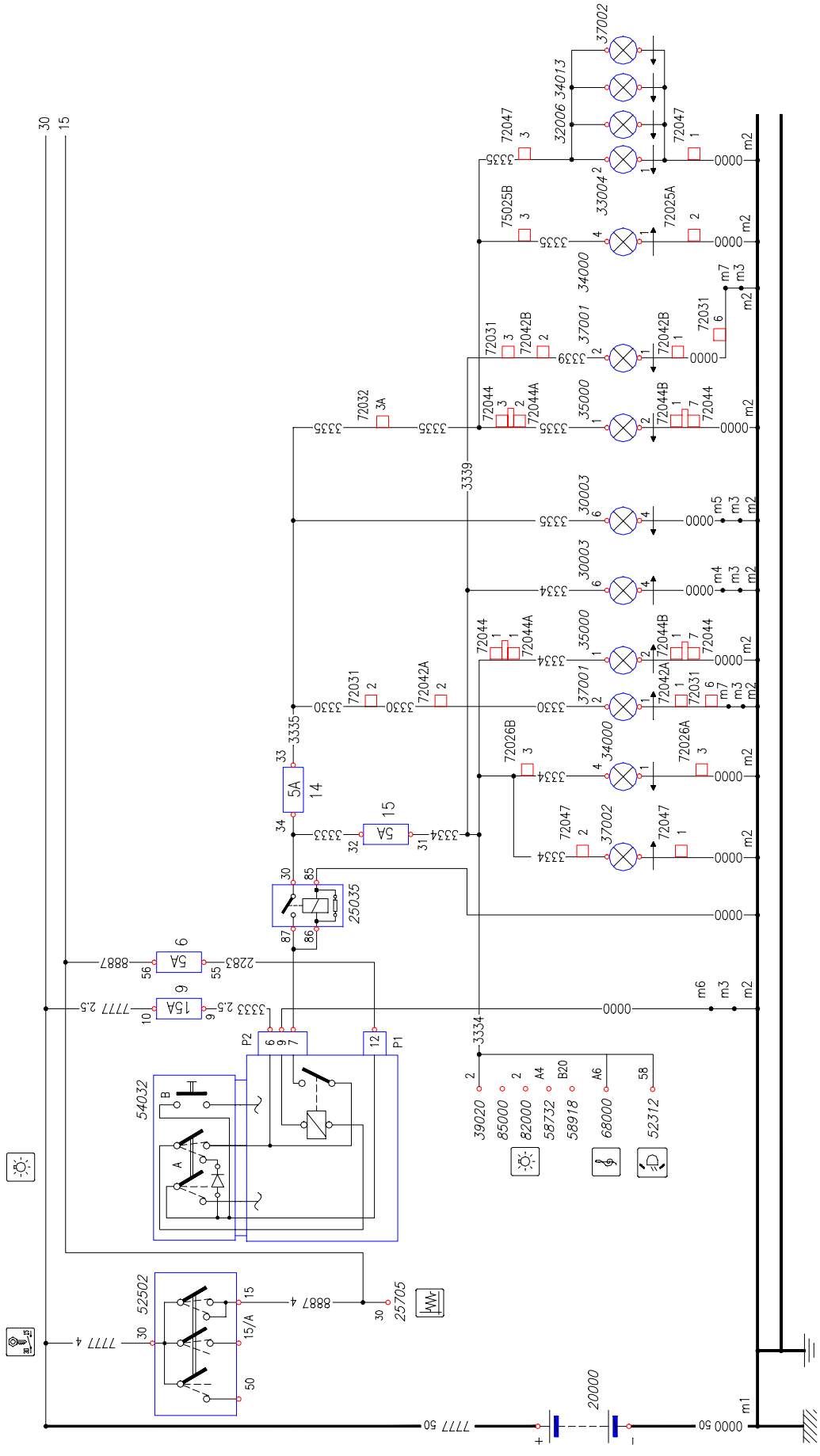

Chart 10: Flood and dipped lights

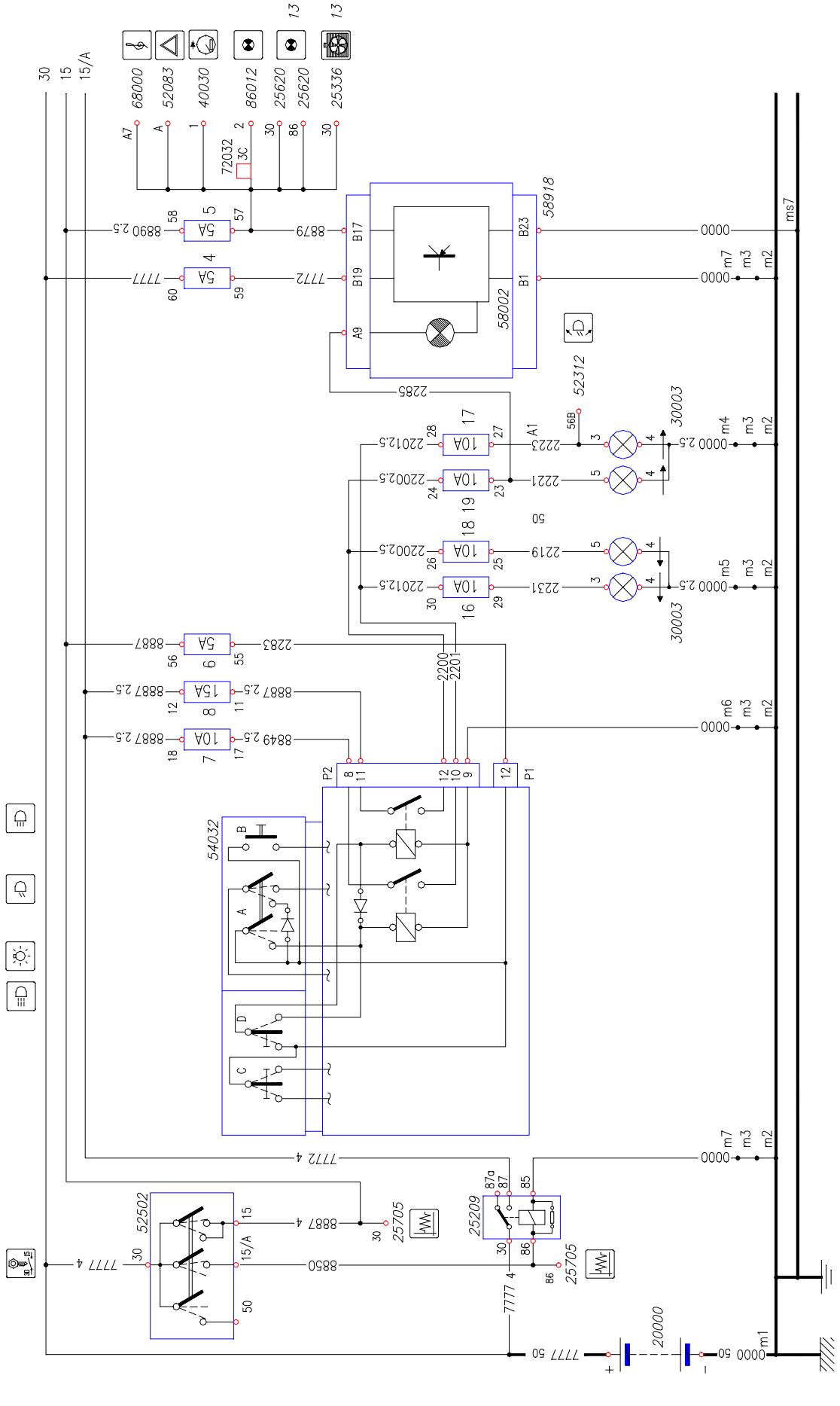

Chart 11A: Back and front fog lights

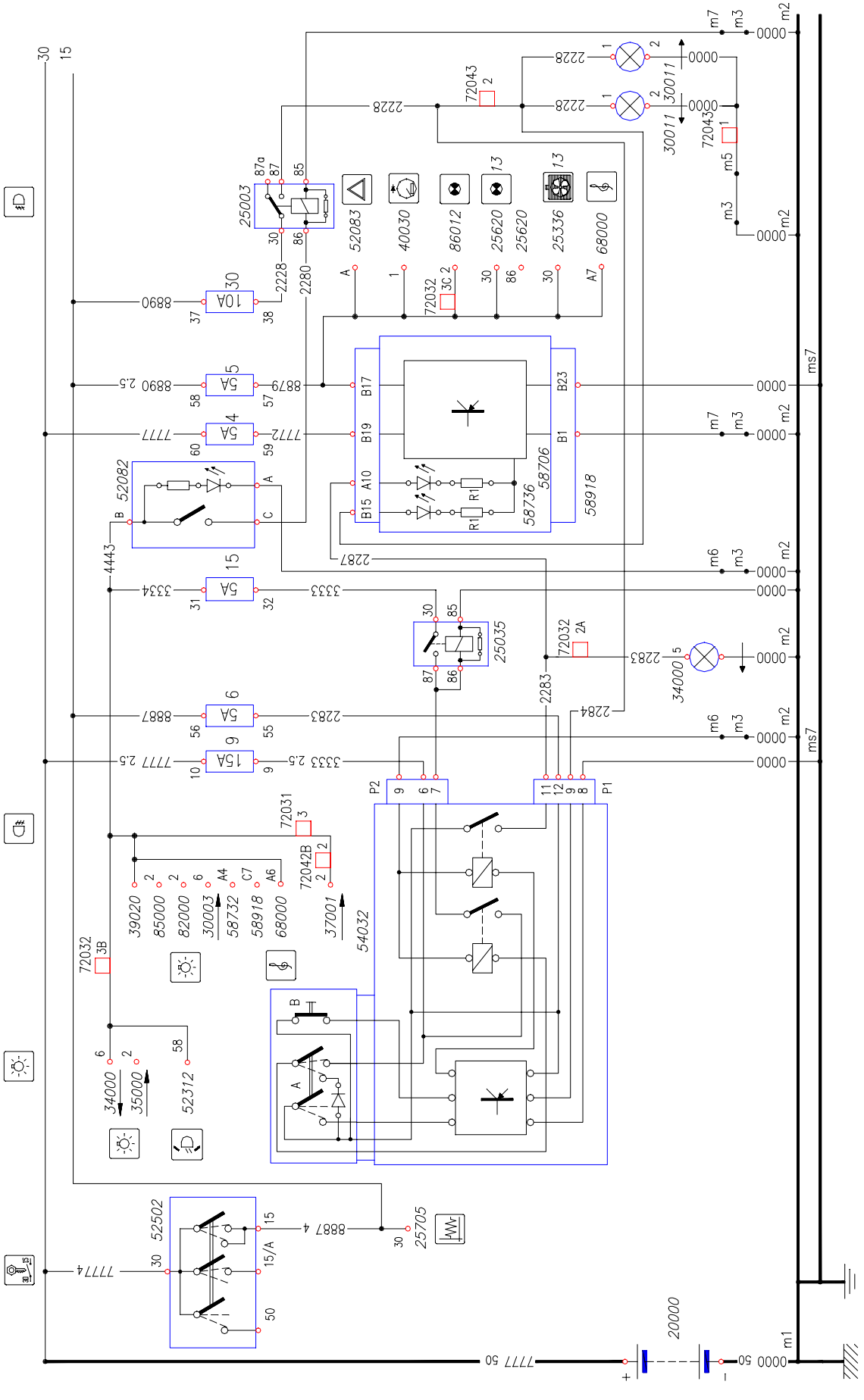

Chart 11B: Back and front fog lights(van)

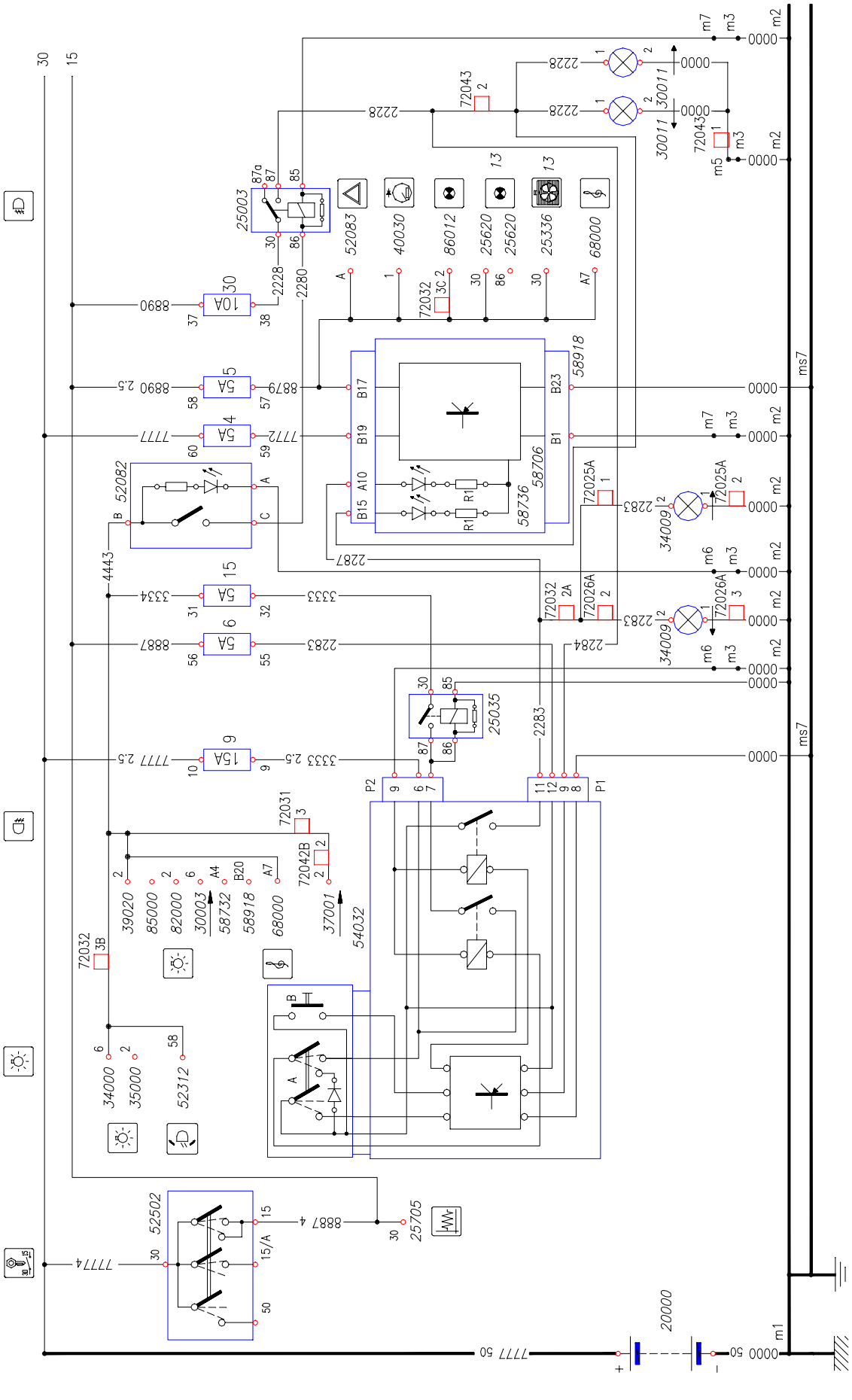

Chart 12: Front light setting

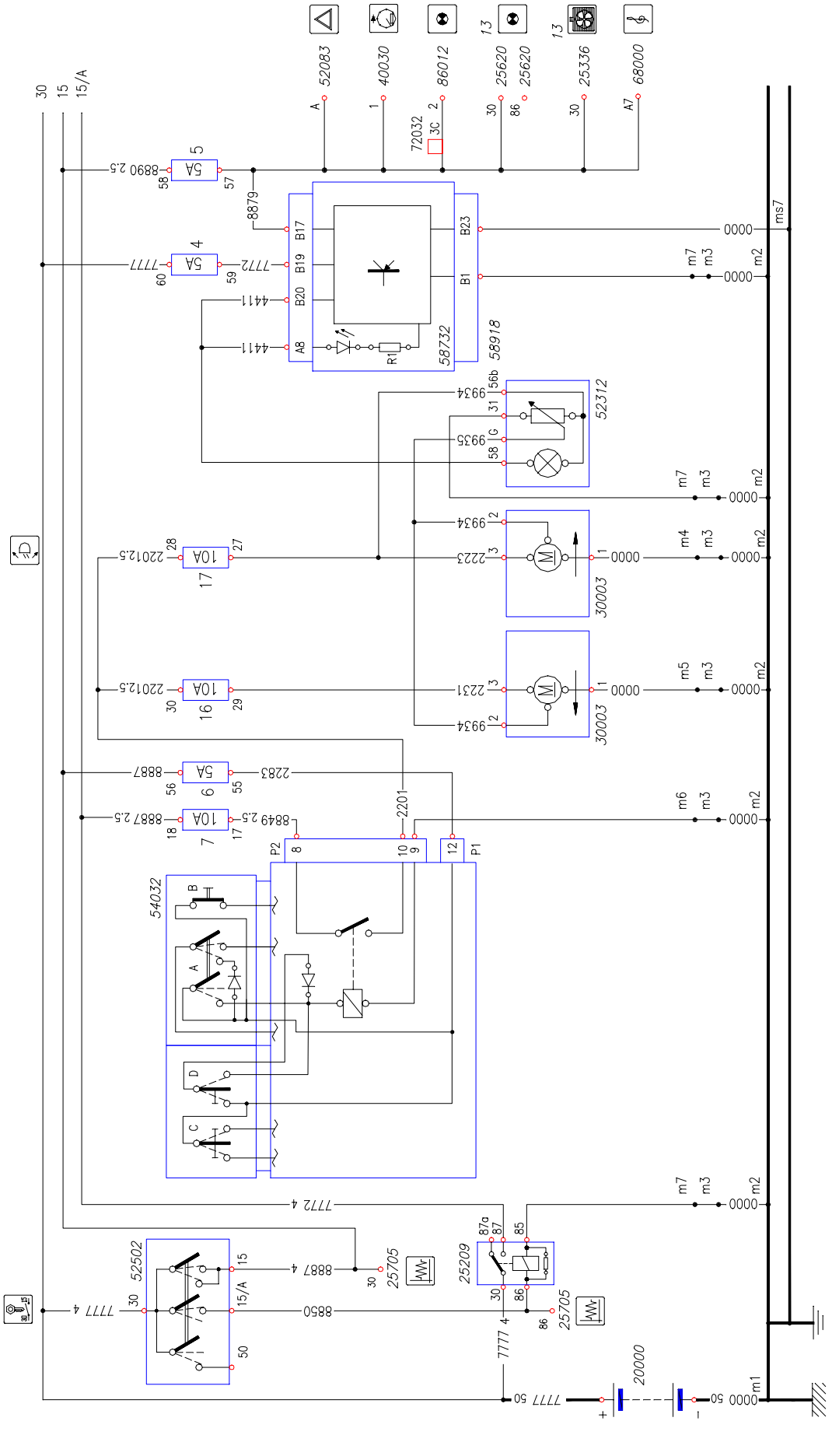

Chart 13A: Direction and emergency lights

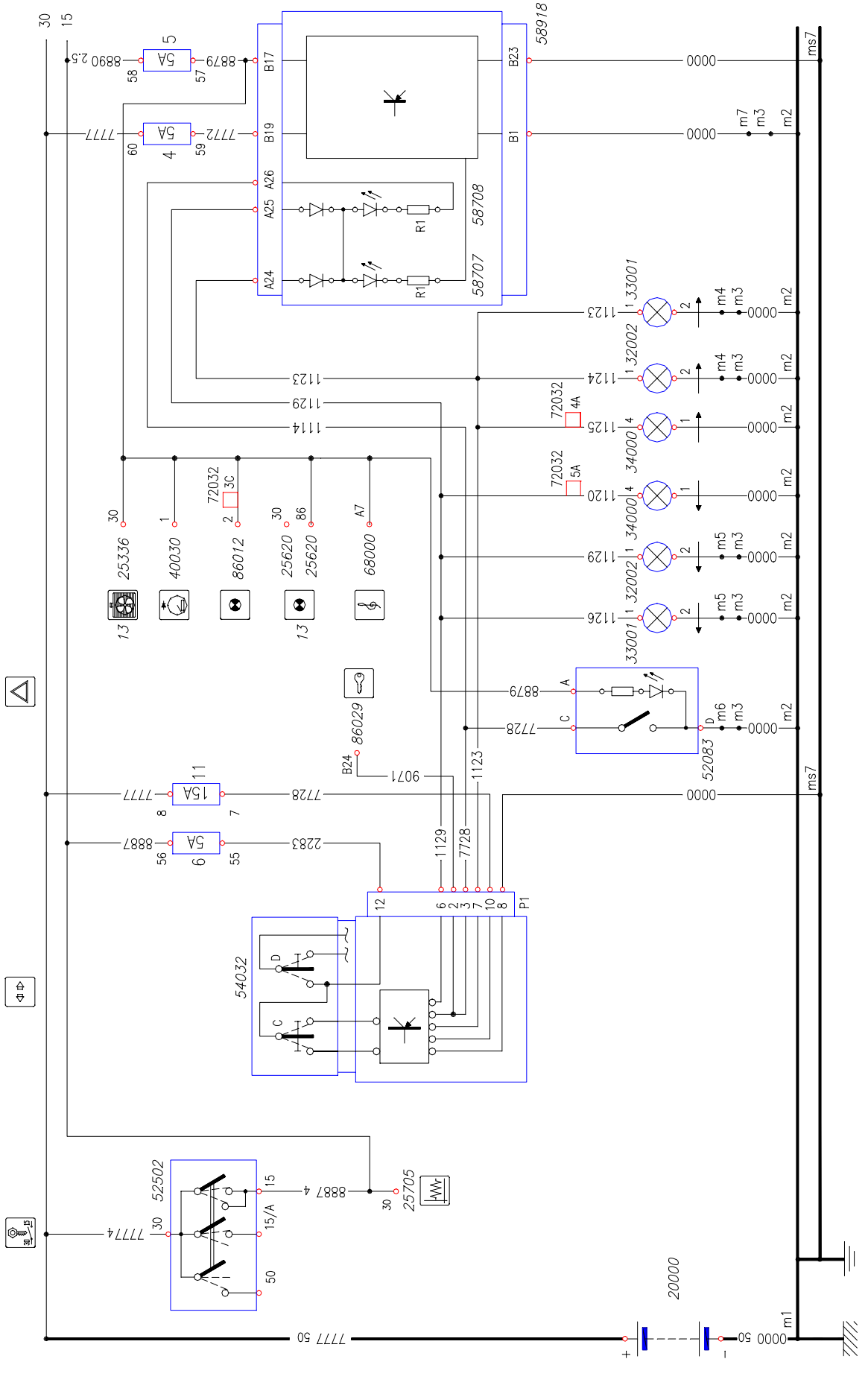

Chart 13B: Direction and emergency lights (van)

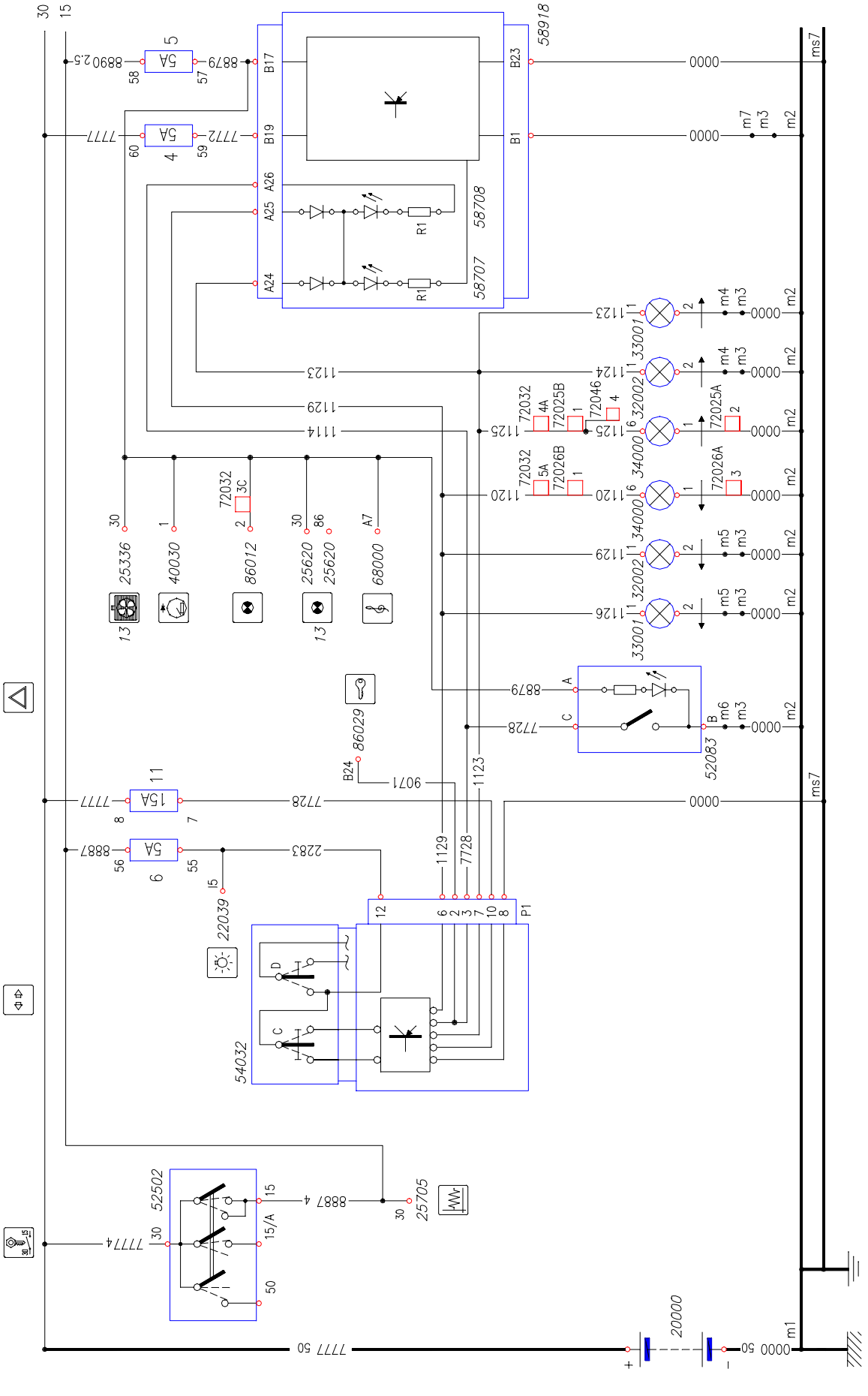

Chart 14A: Stop lights

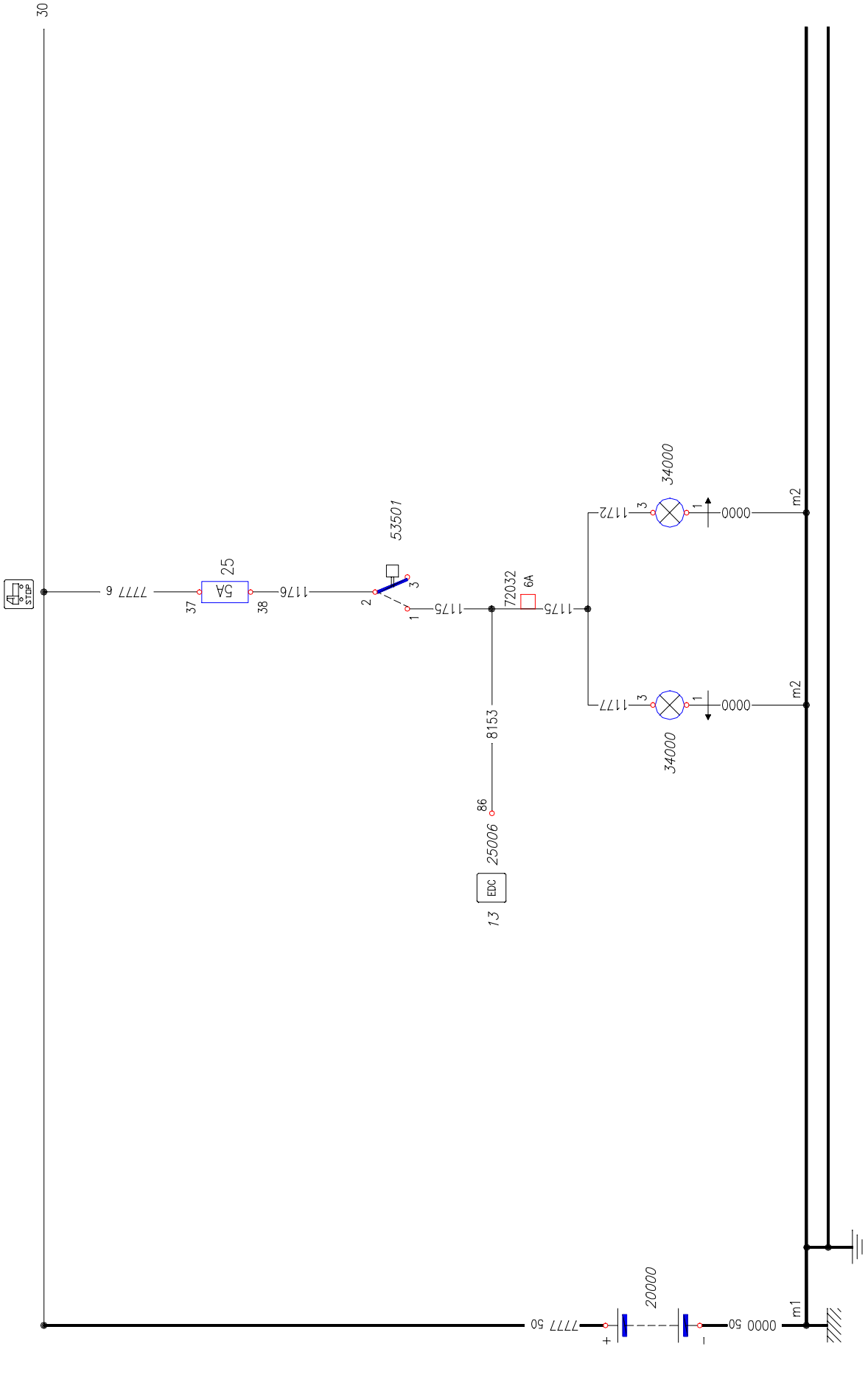

Chart 14B: Stop lights (van)

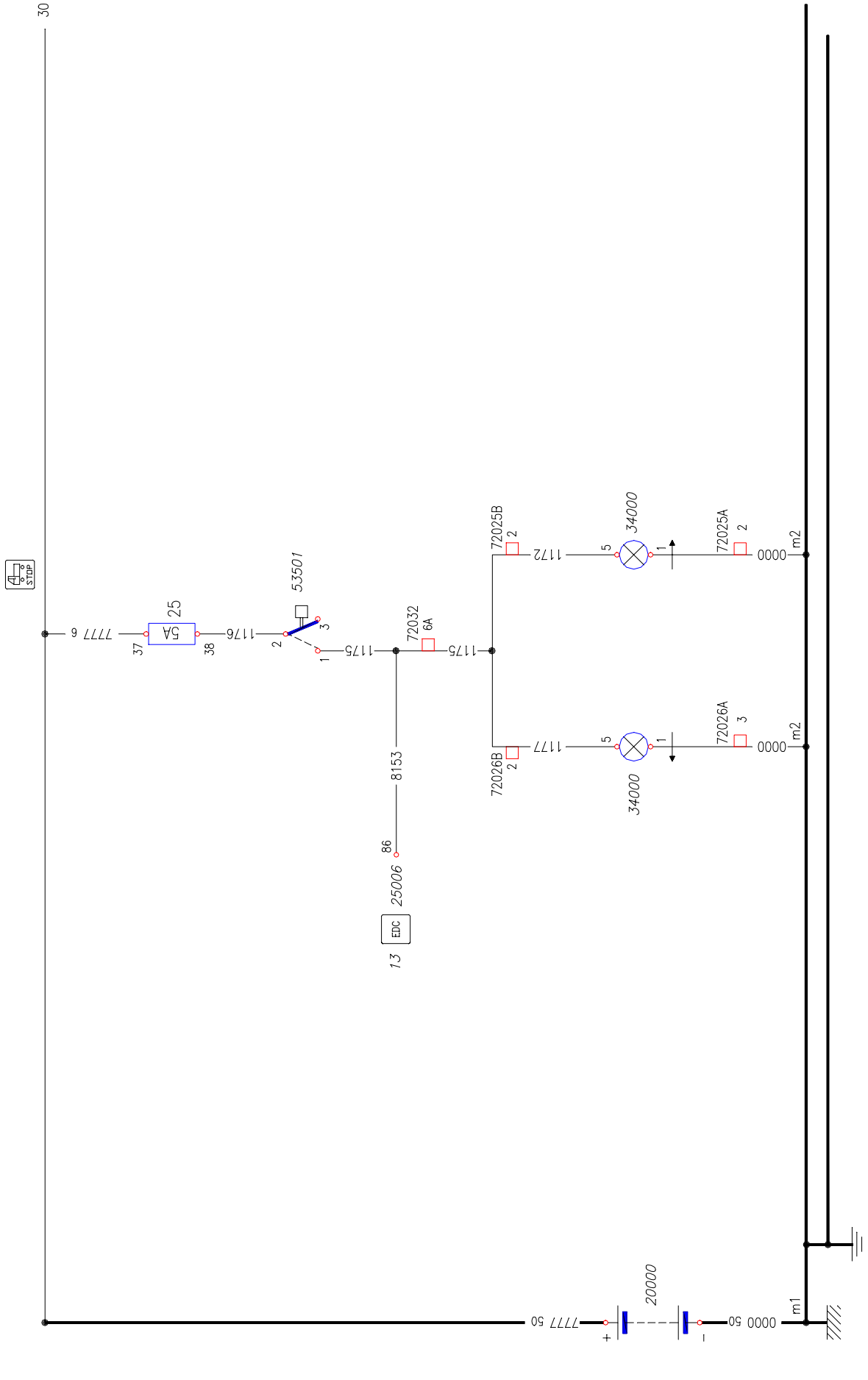

Chart 15A: Backup lights

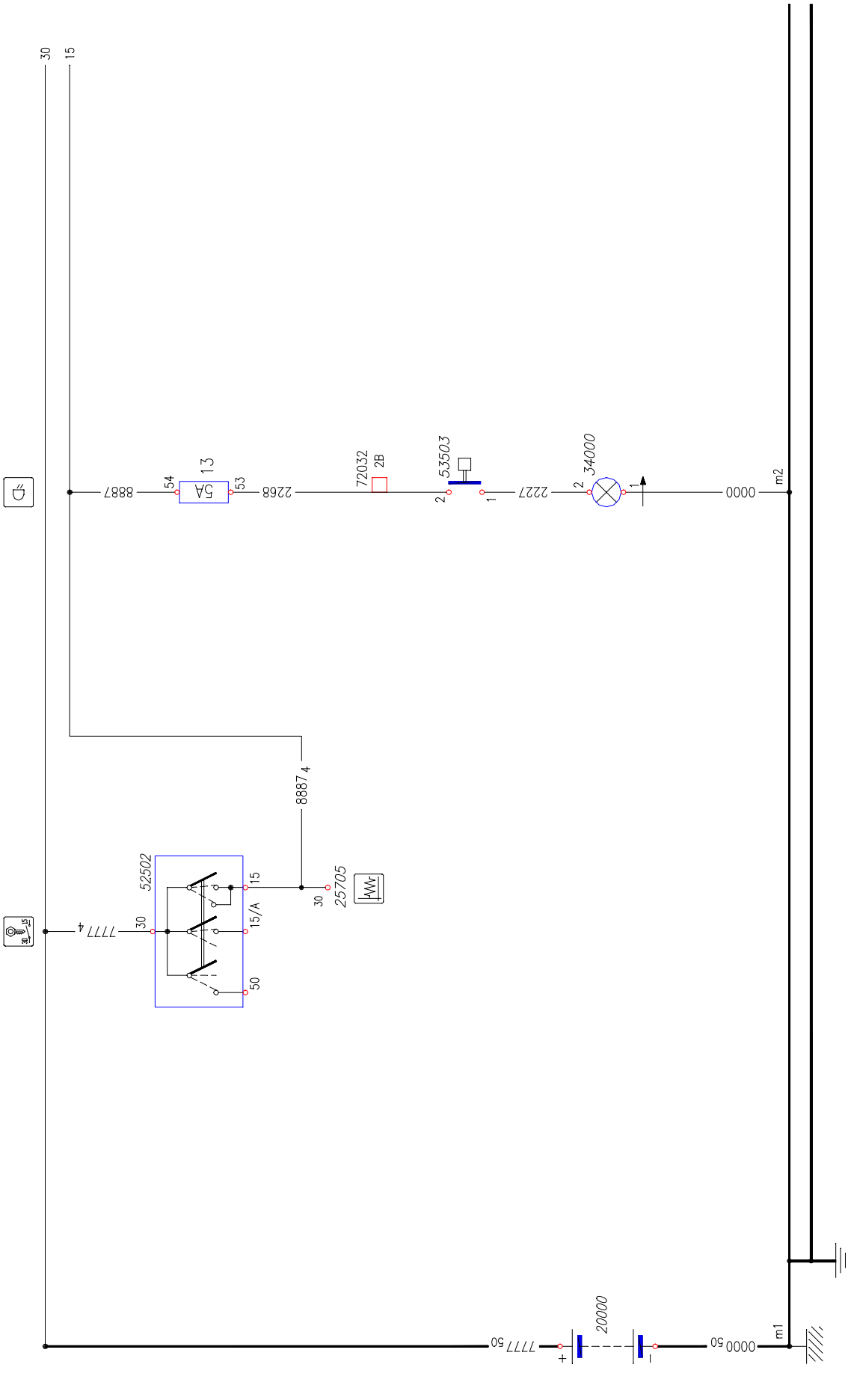

Chart 15B: Backup lights (van)

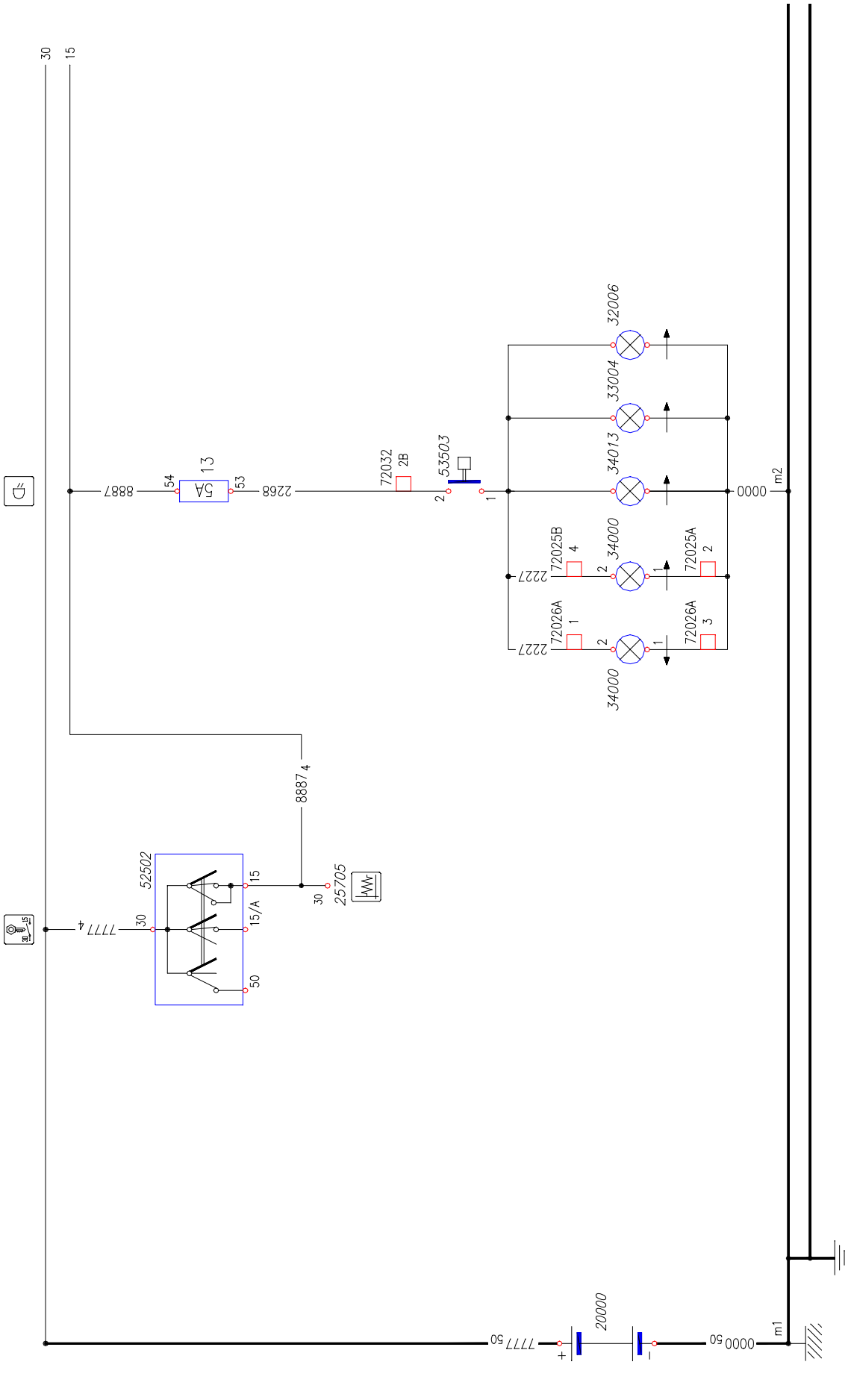

Chart 16: Horn

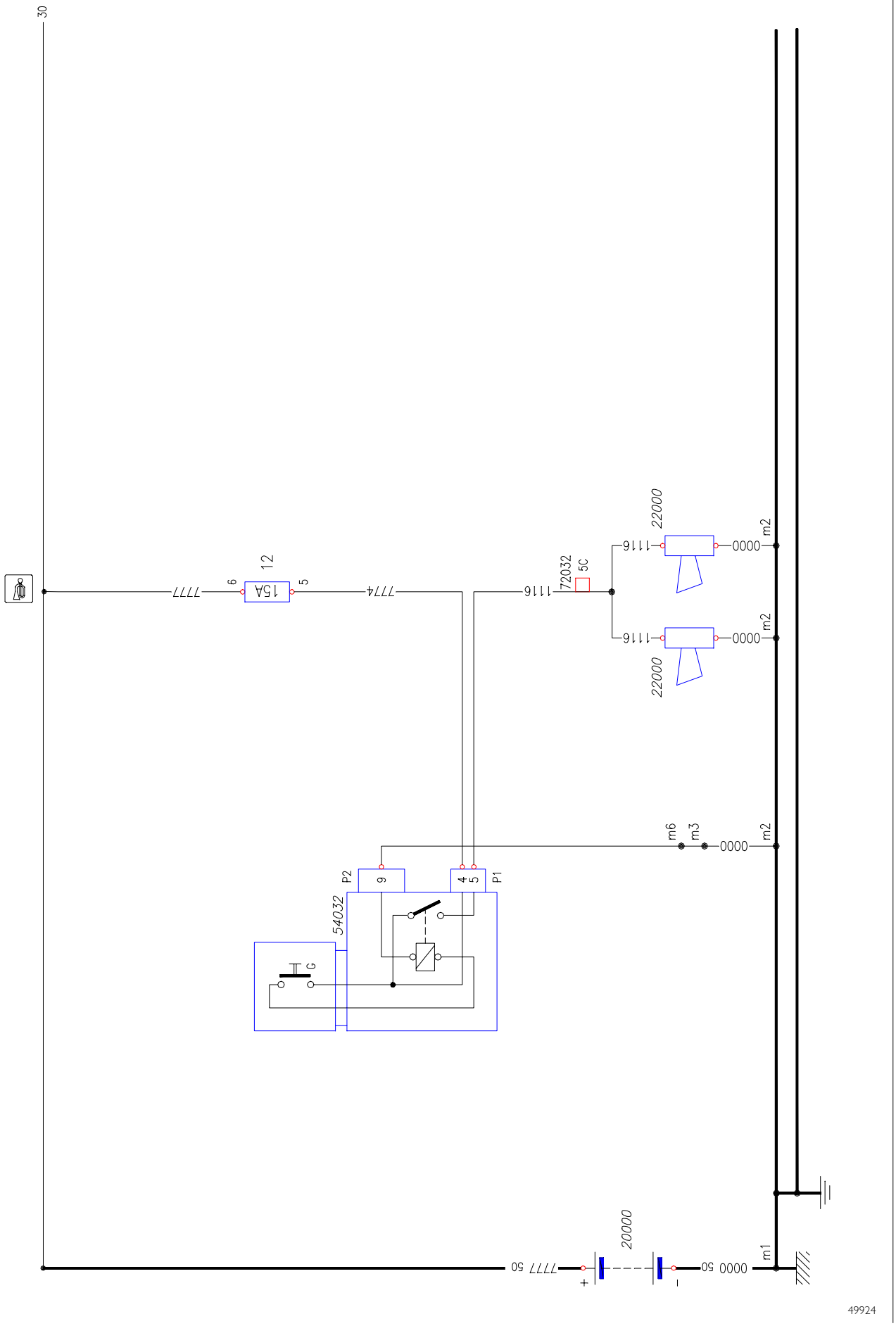

Chart 17: Windscreen and front light washer

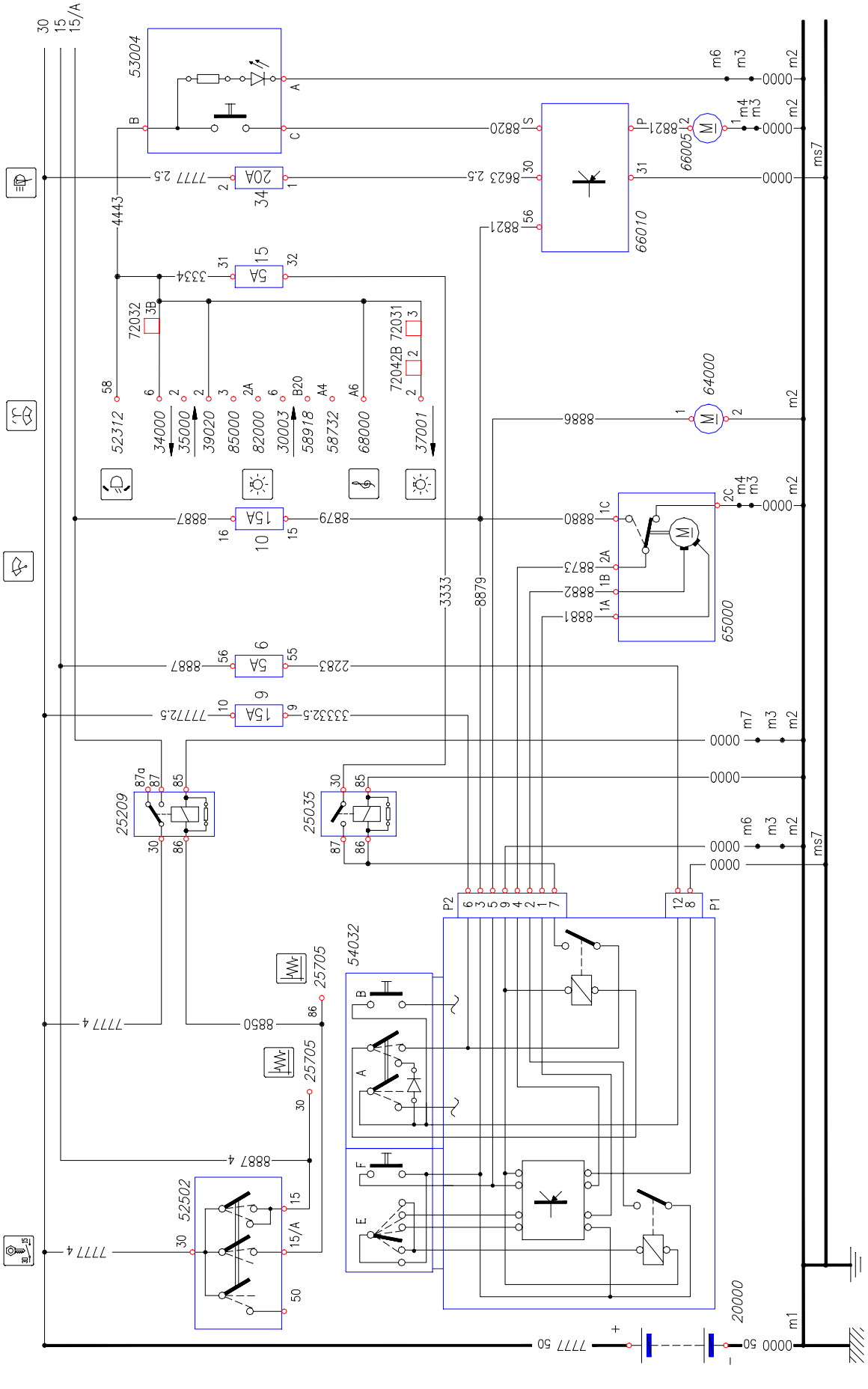

Chart 18A: Windscreen defroster

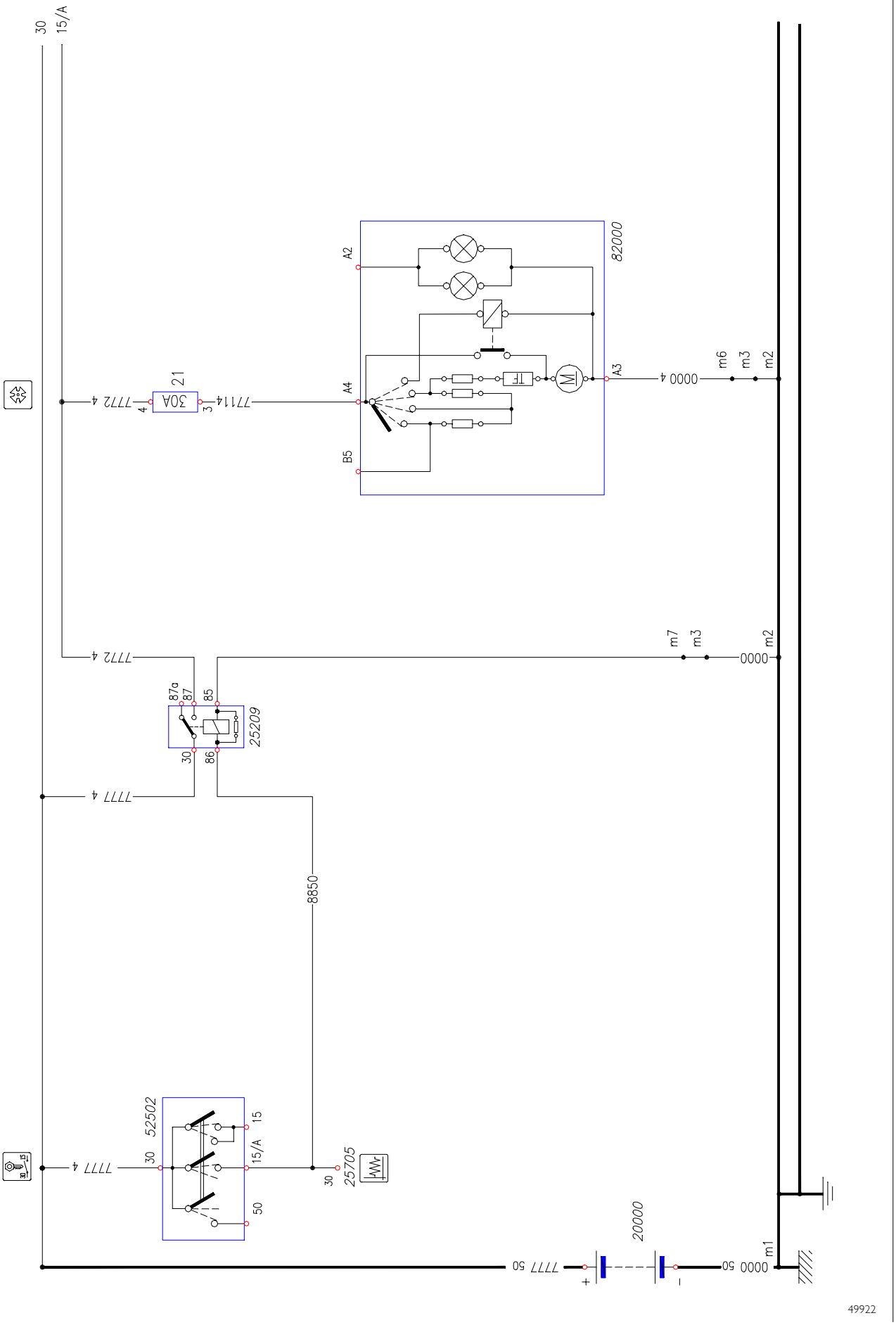

Chart 18B: Windscreen defroster (.10 - .12)

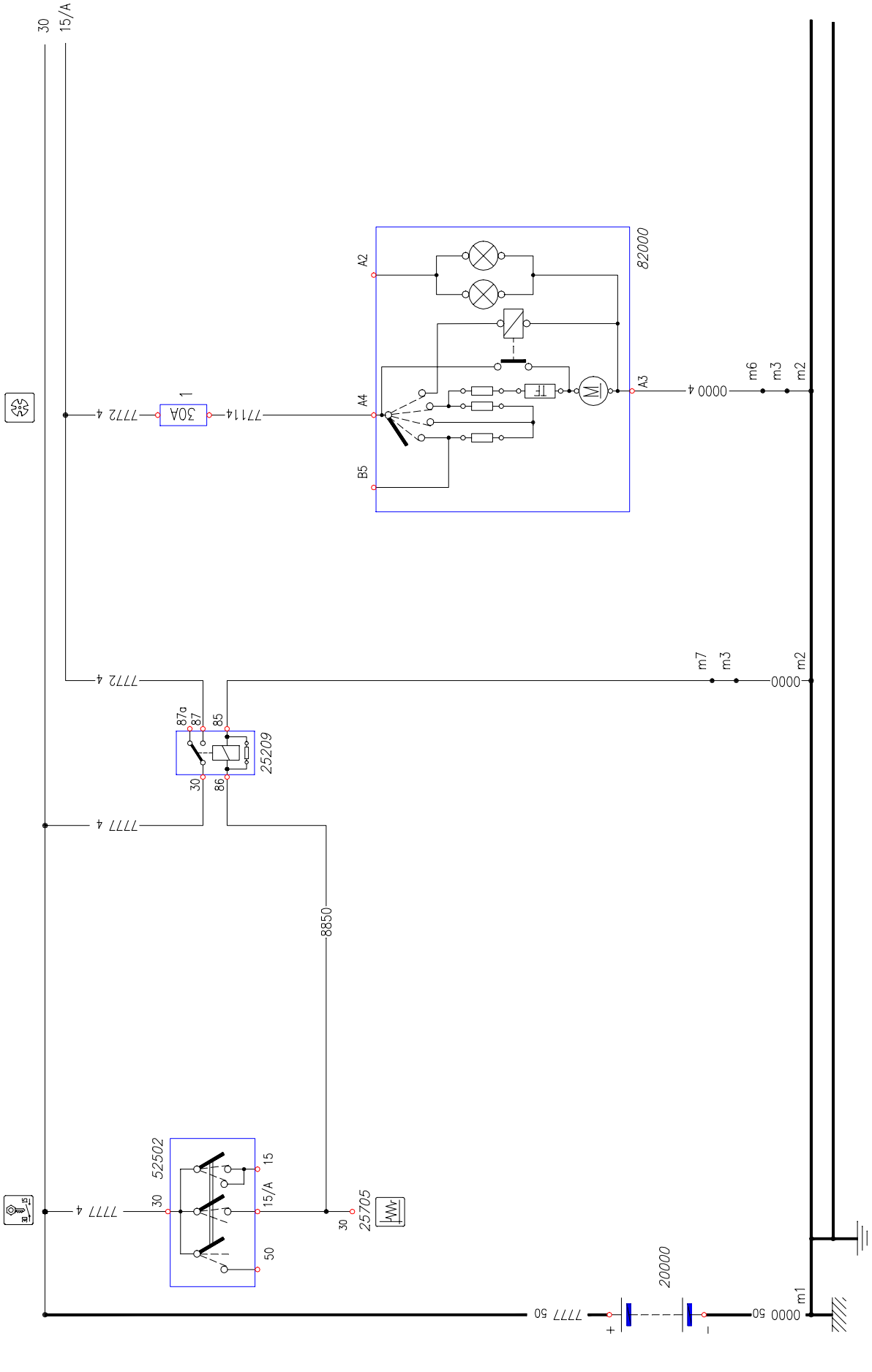

Chart 19: Radio set

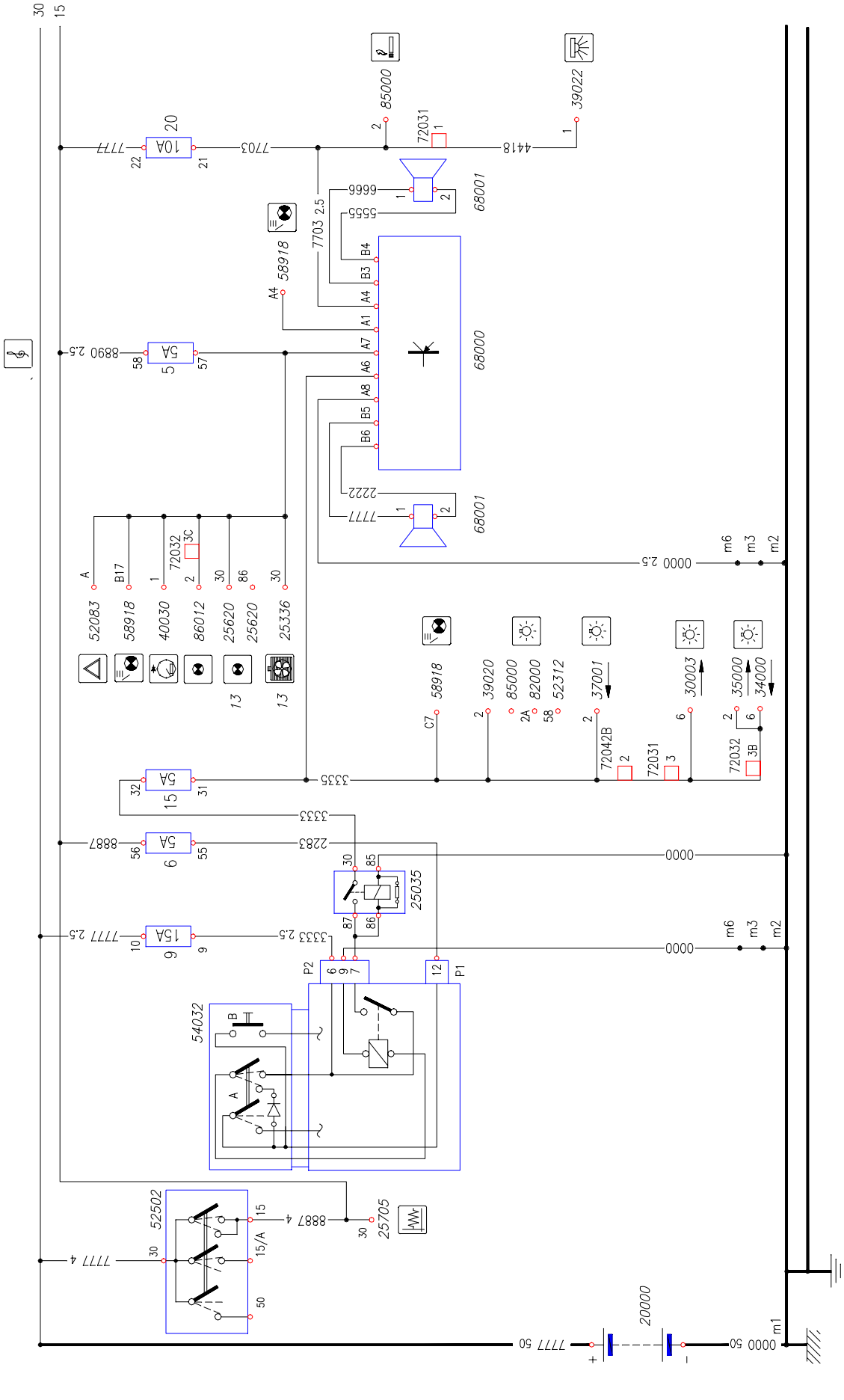

Chart 20A: Internal lighting and cigarette lighter

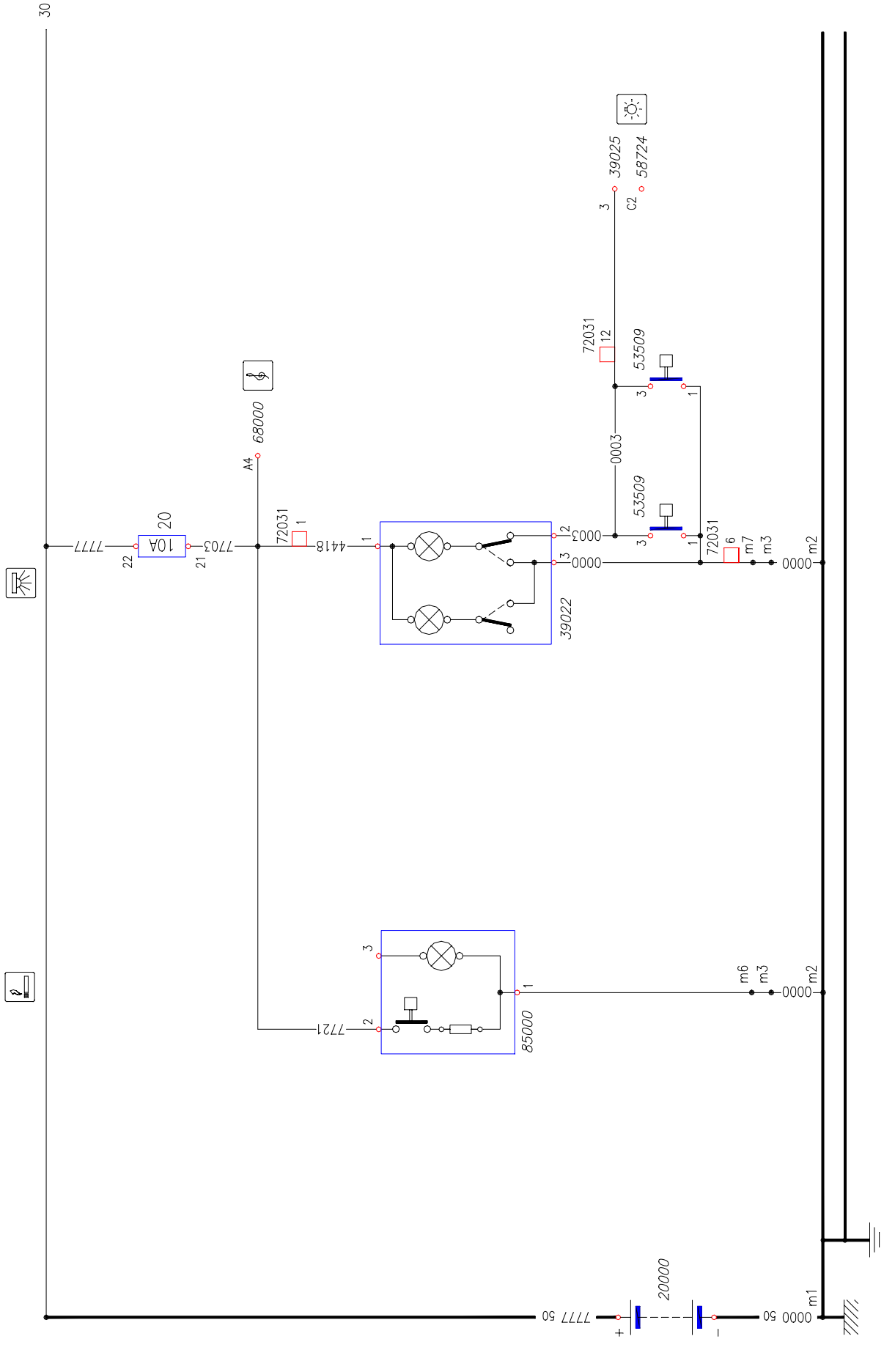

Chart 20B: Internal lighting (van)

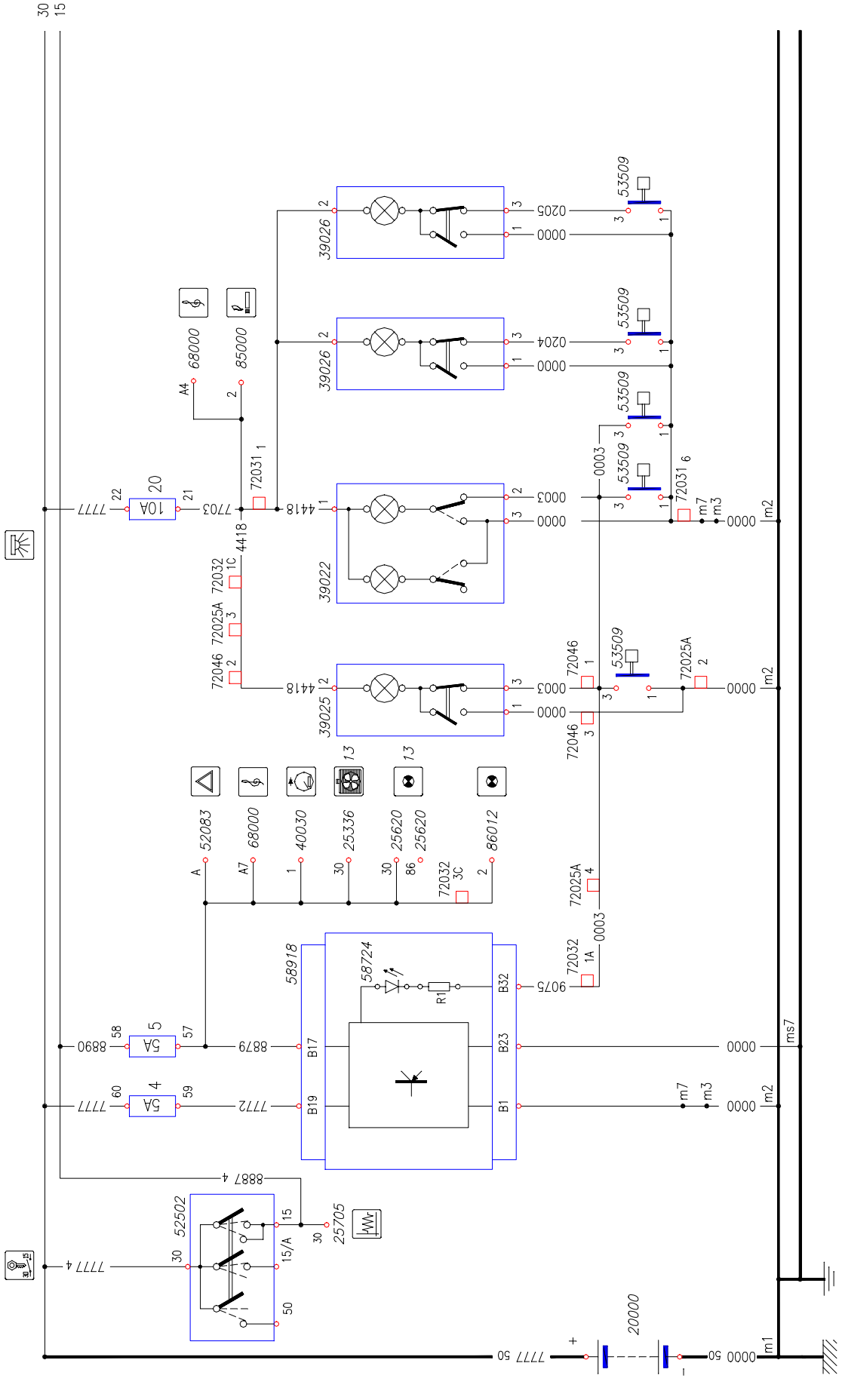

Chart 20C: Internal lighting 6+1 vehicle

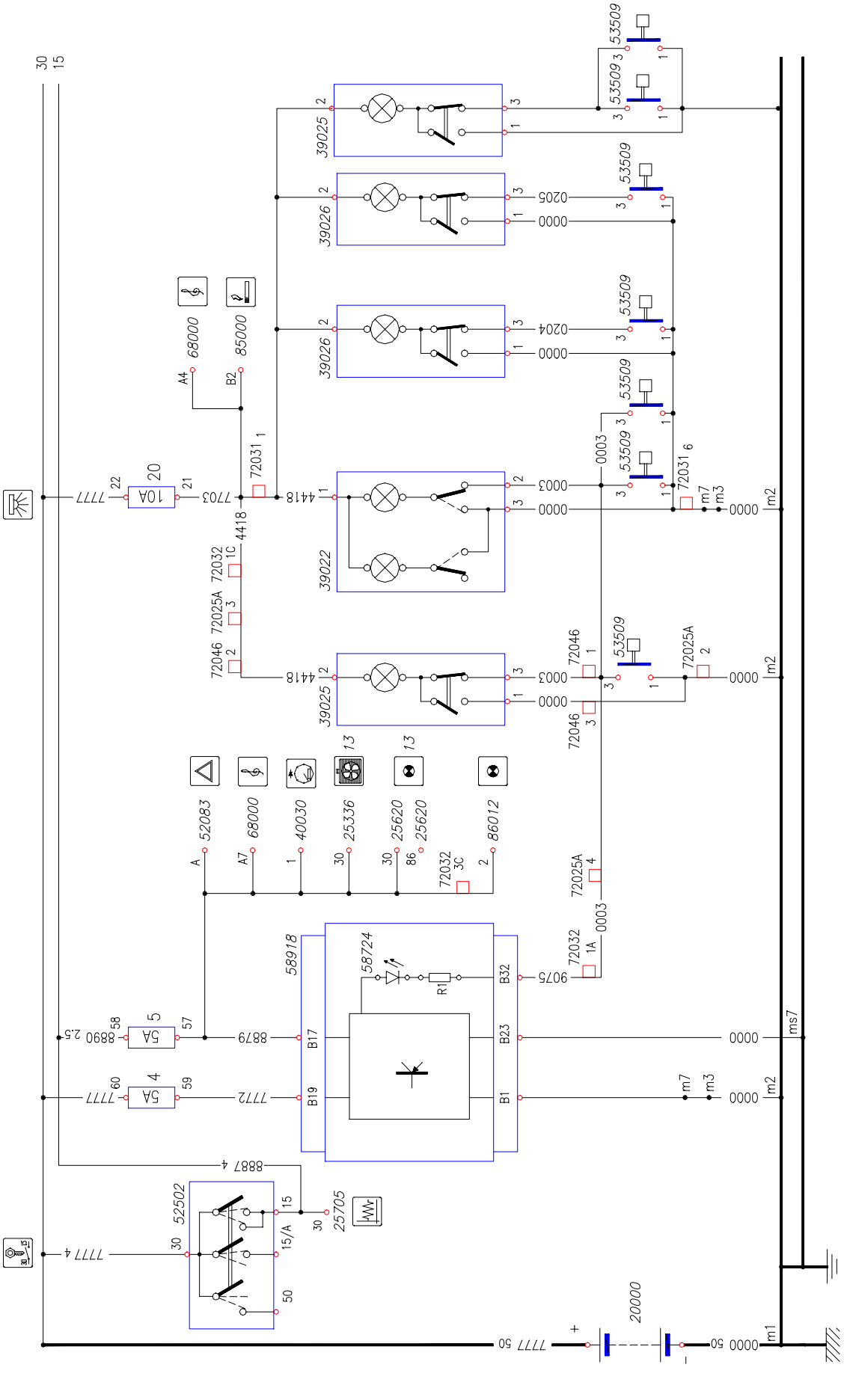

Chart 20D: Internal lighting and cigarette lighter (F1A)

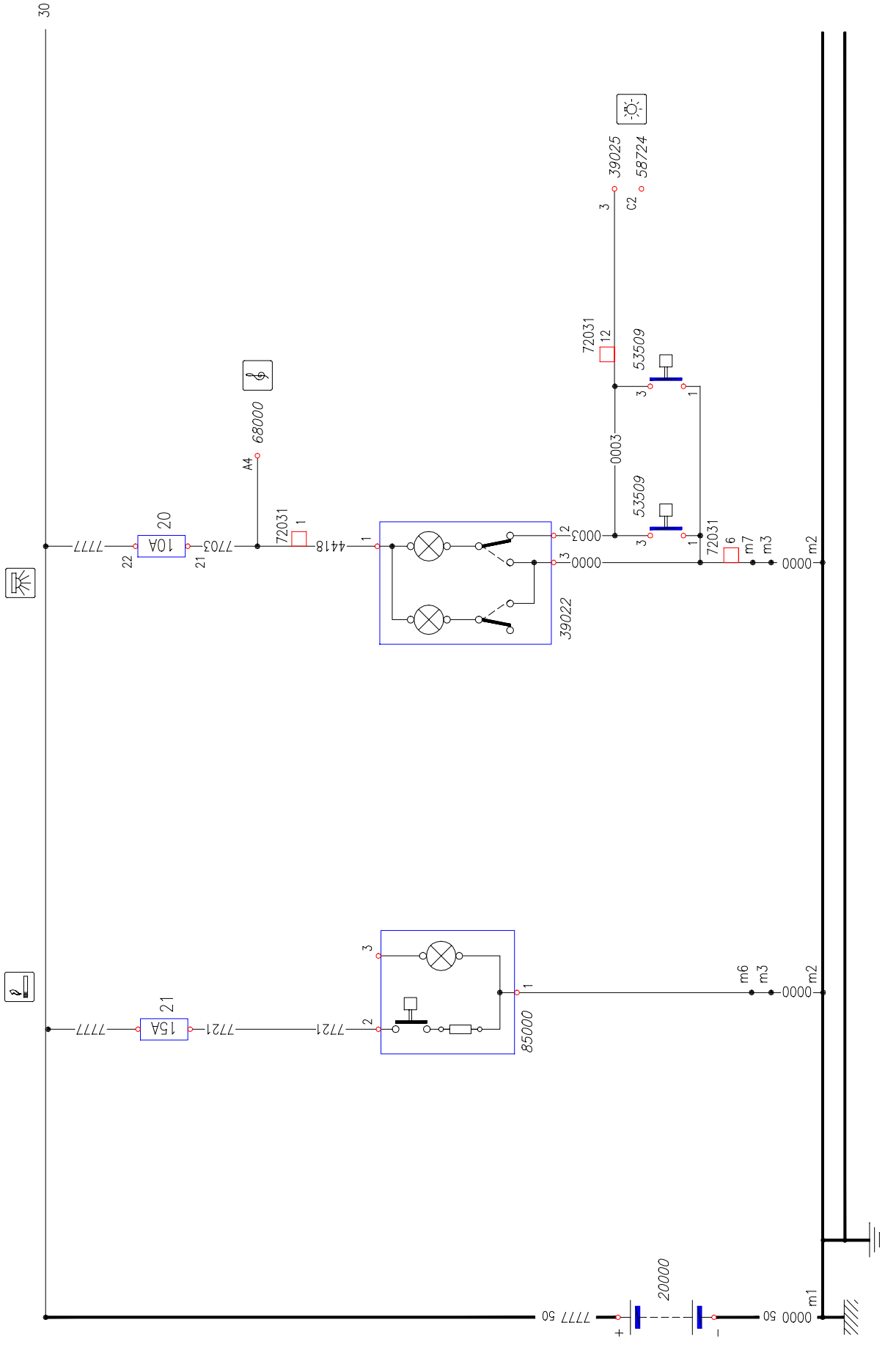

Chart 21A: Immobilizer (.9)

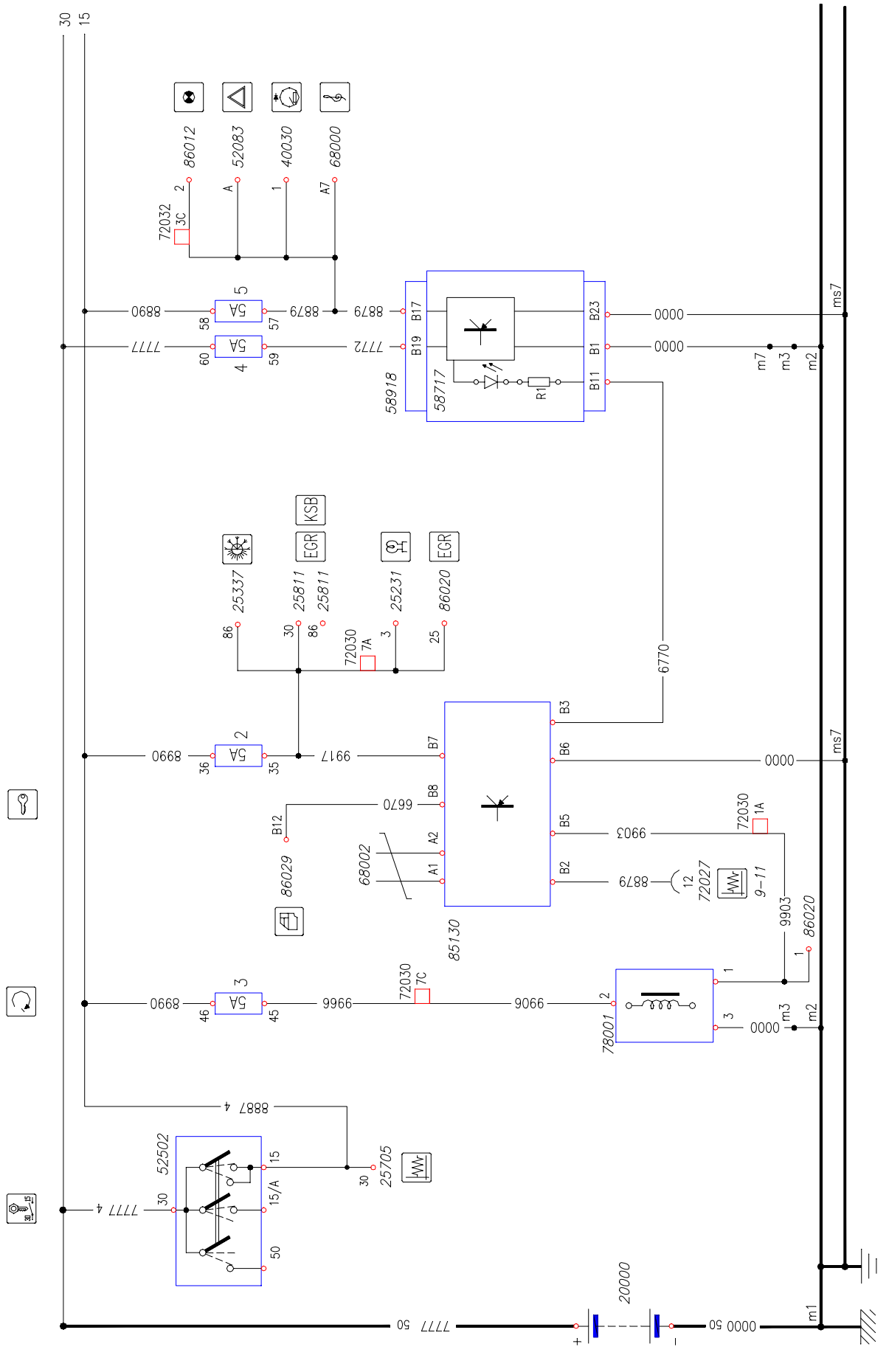

Chart 21B: Immobilizer (.11)

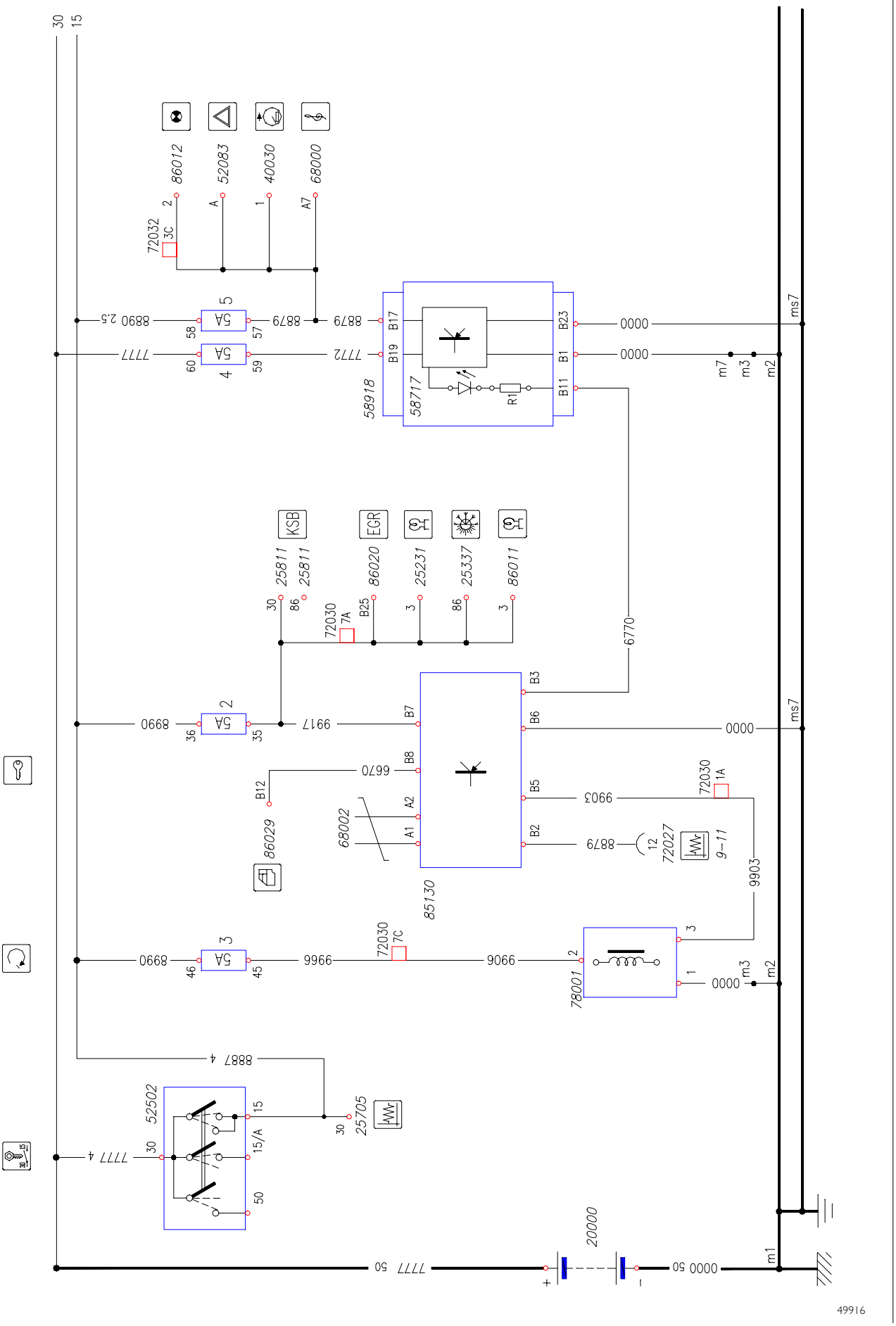

Chart 21C: Immobilizer (.10 - .12 - .13 - .15)

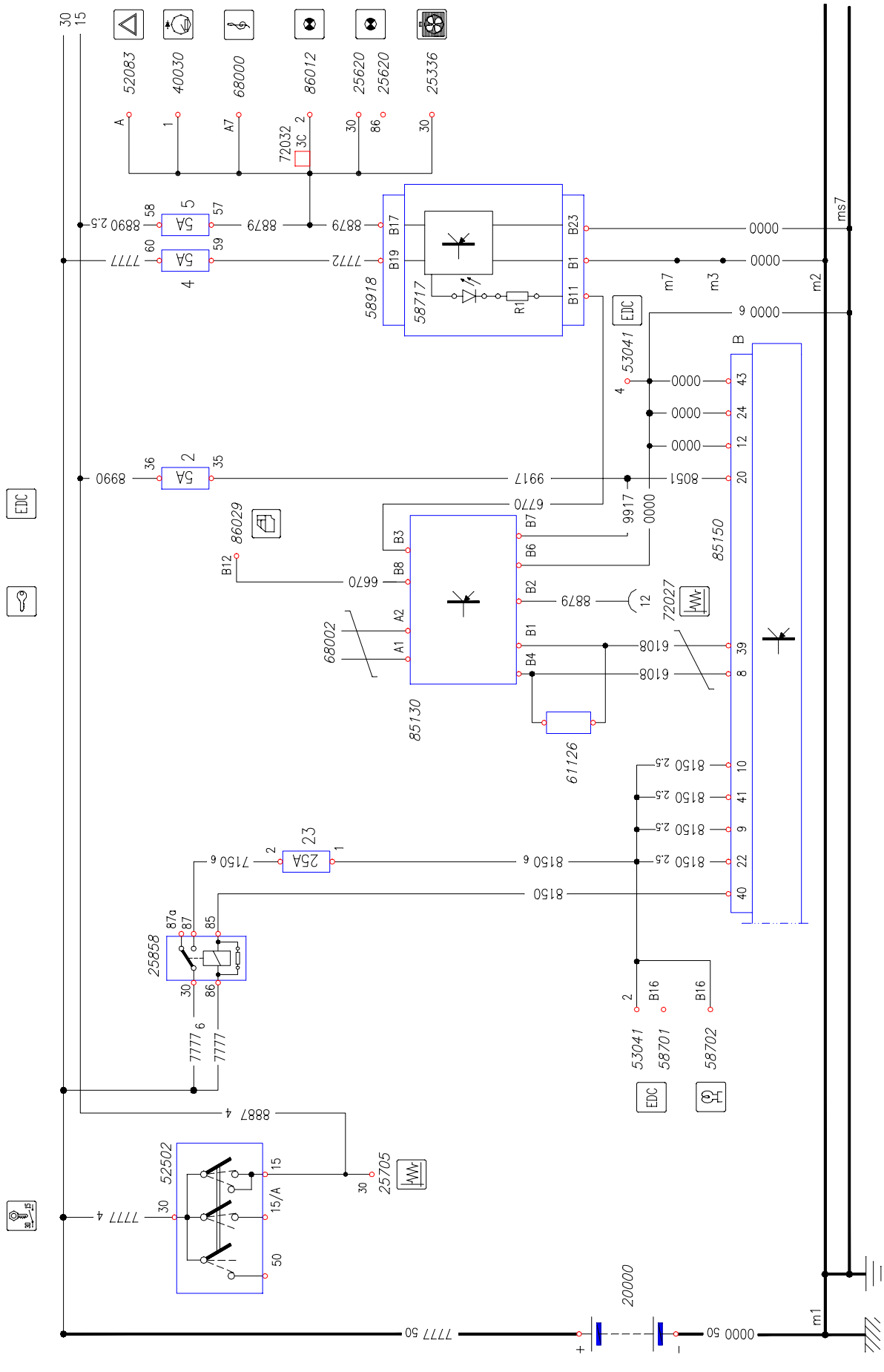

Chart 22A: Diagnosis connection (.9 - .11)

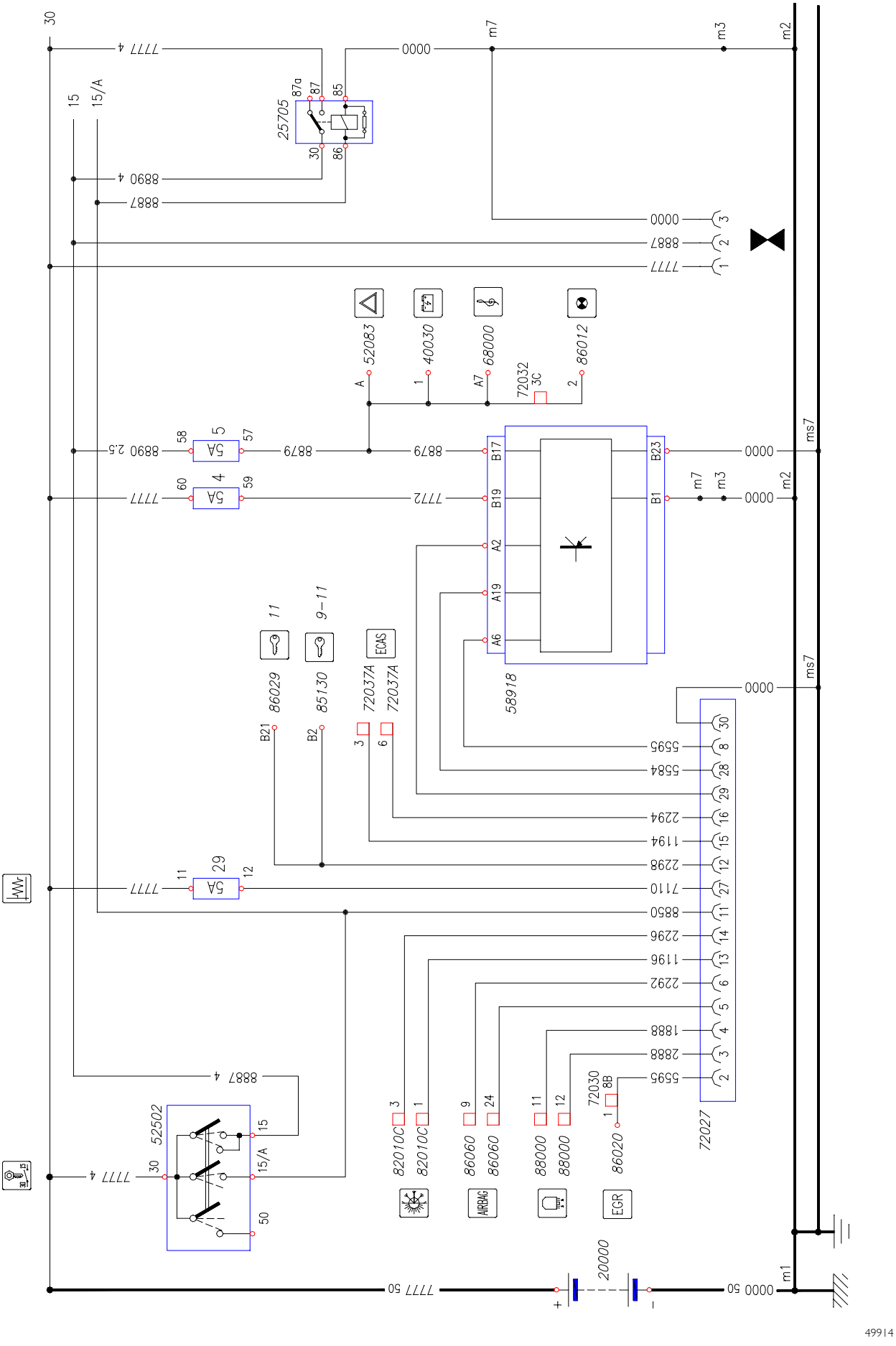

Chart 22B: Diagnosis connection (.10 - .12 - .13 - .15)

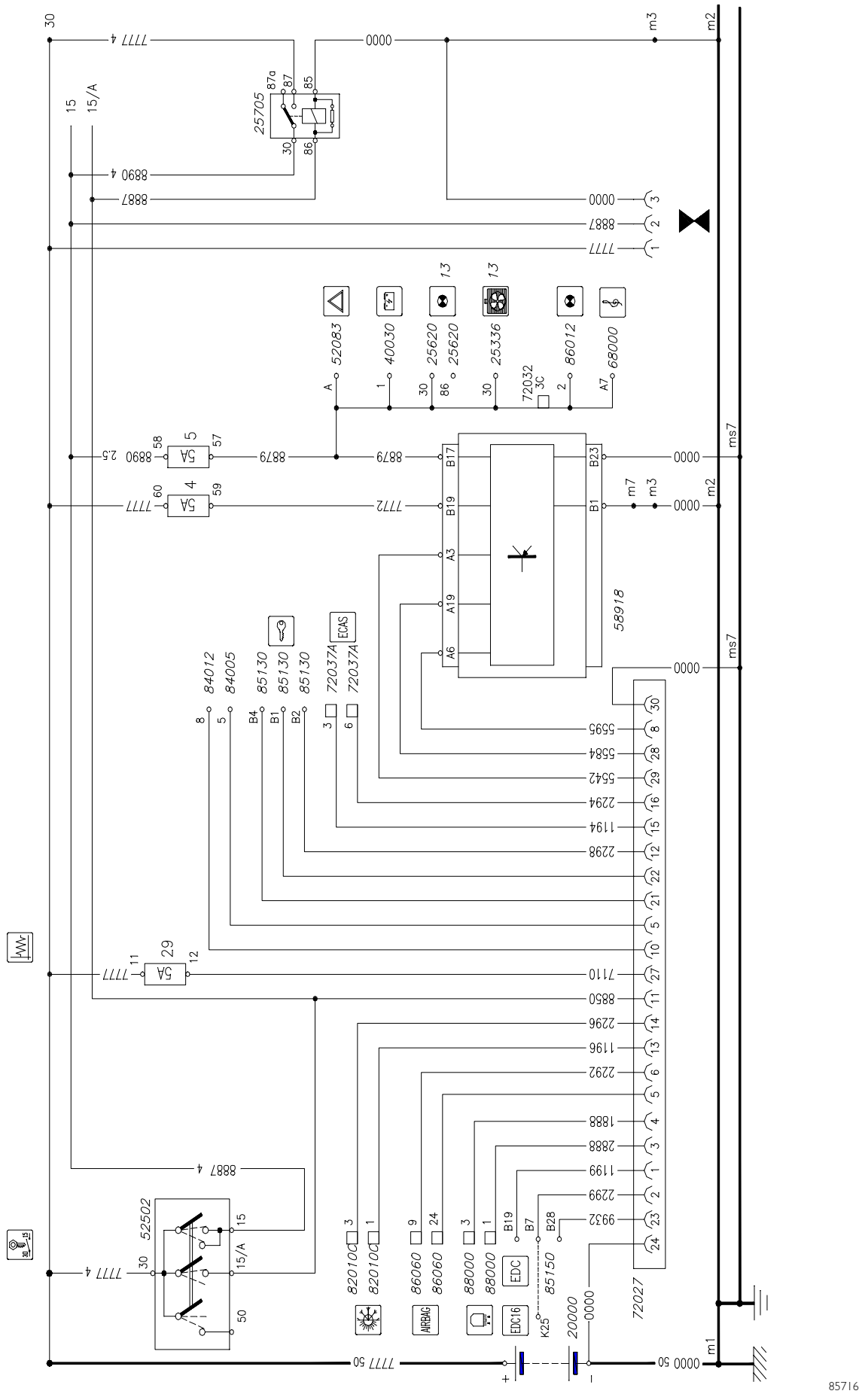

Chart 23A: Engine cooling (.9)

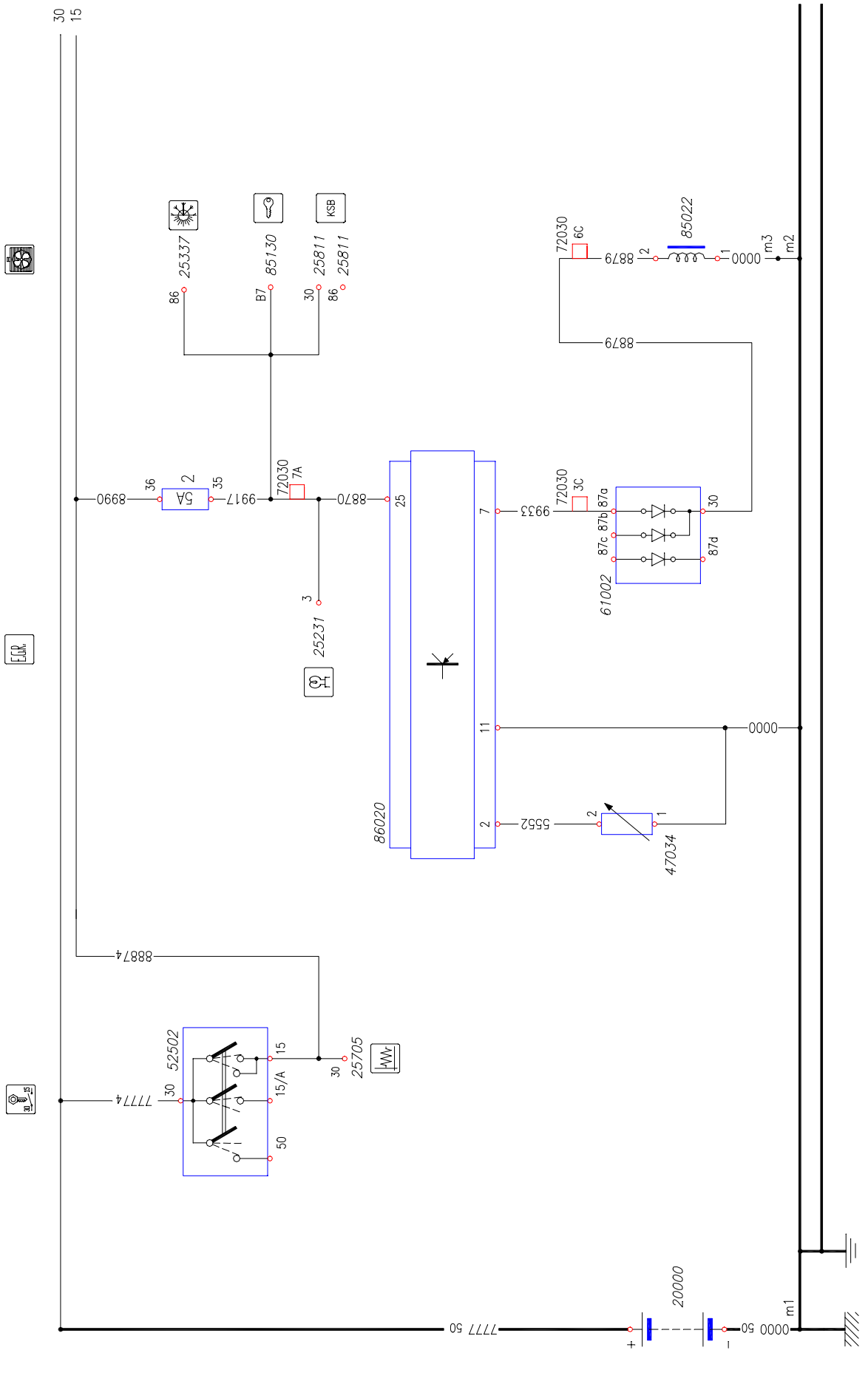

Chart 23B: Engine cooling (.11)

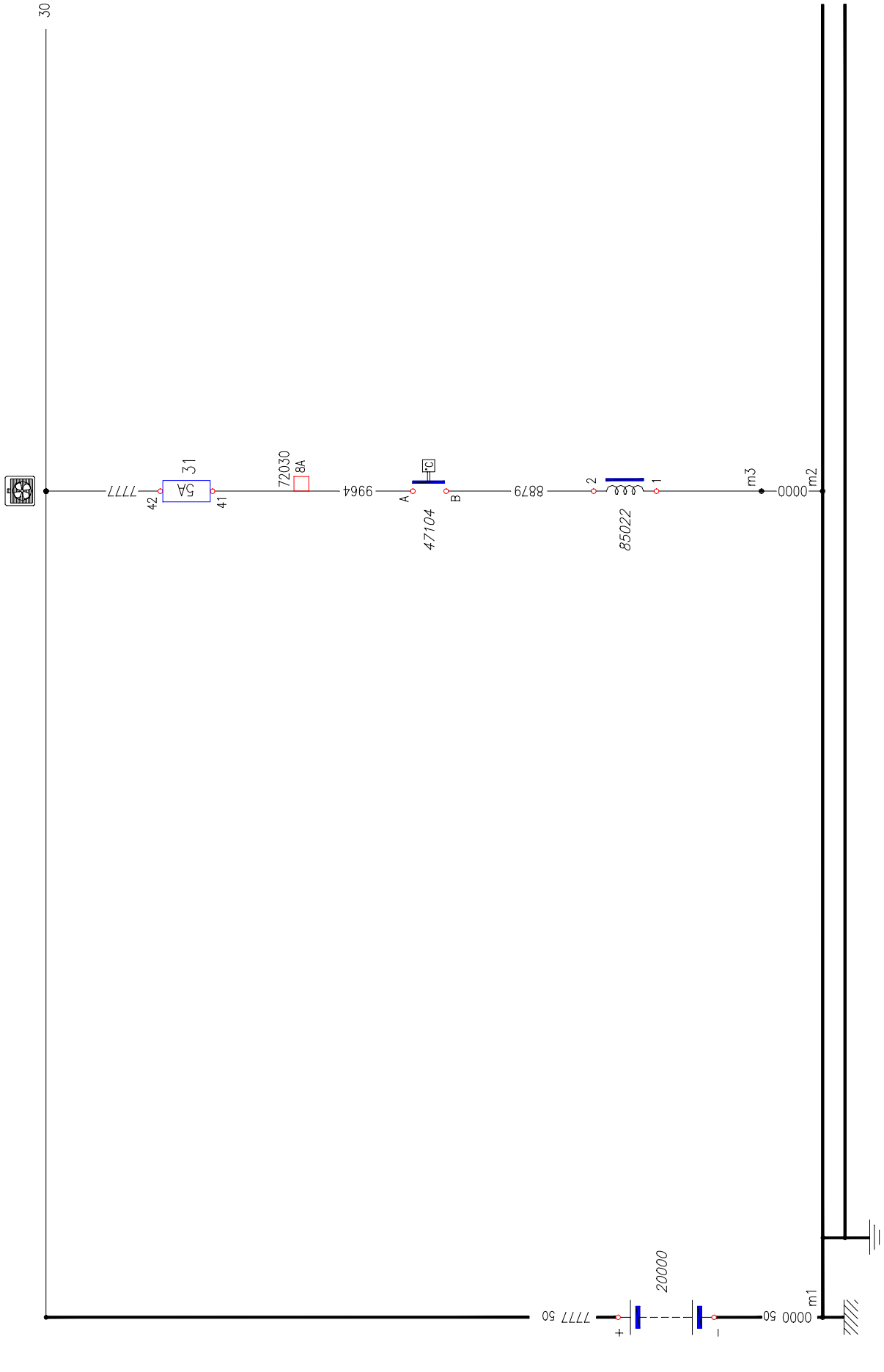

Chart 23C: Engine cooling (1.3-1.5)

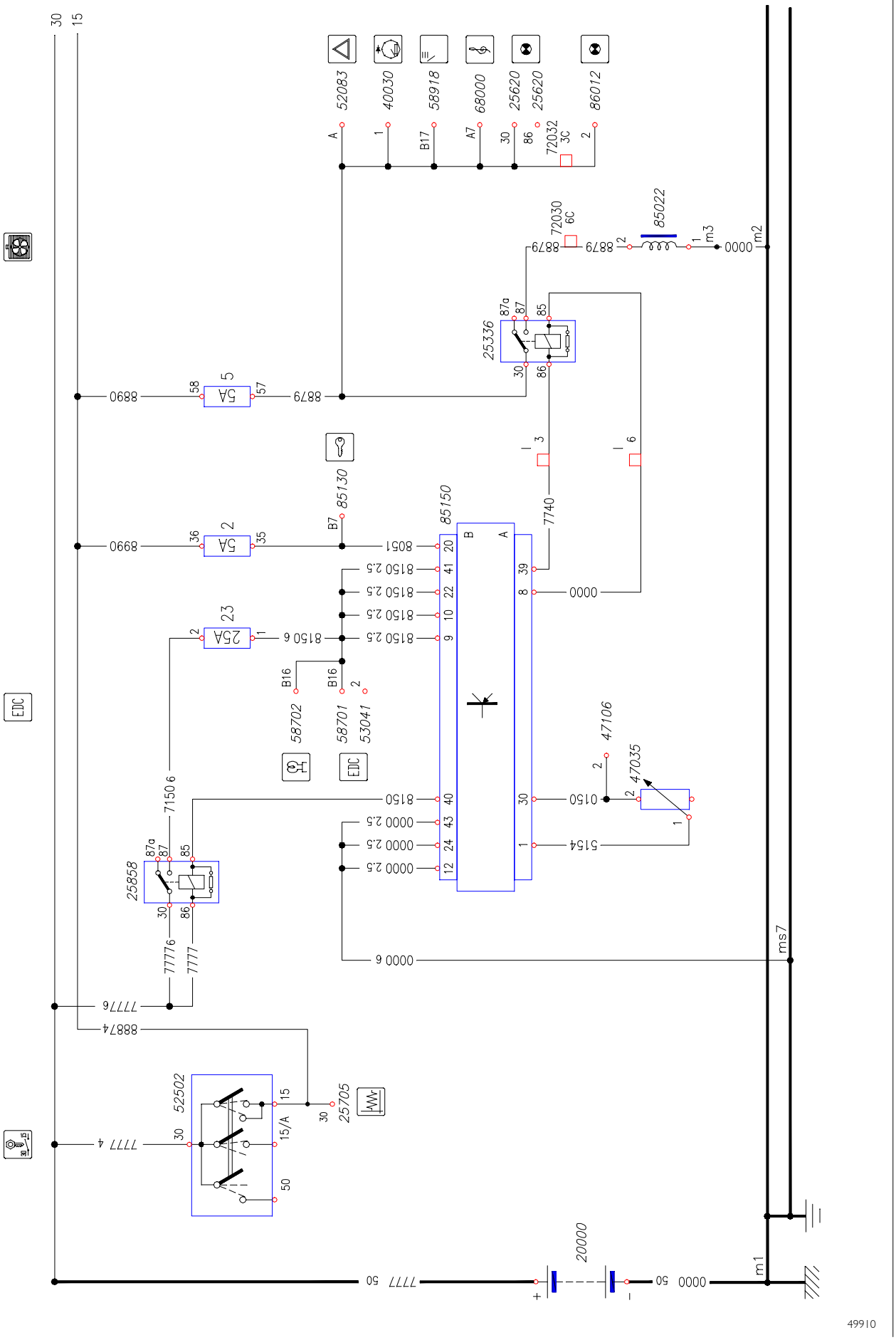

Chart 23D: Engine cooling (.10 - .12)

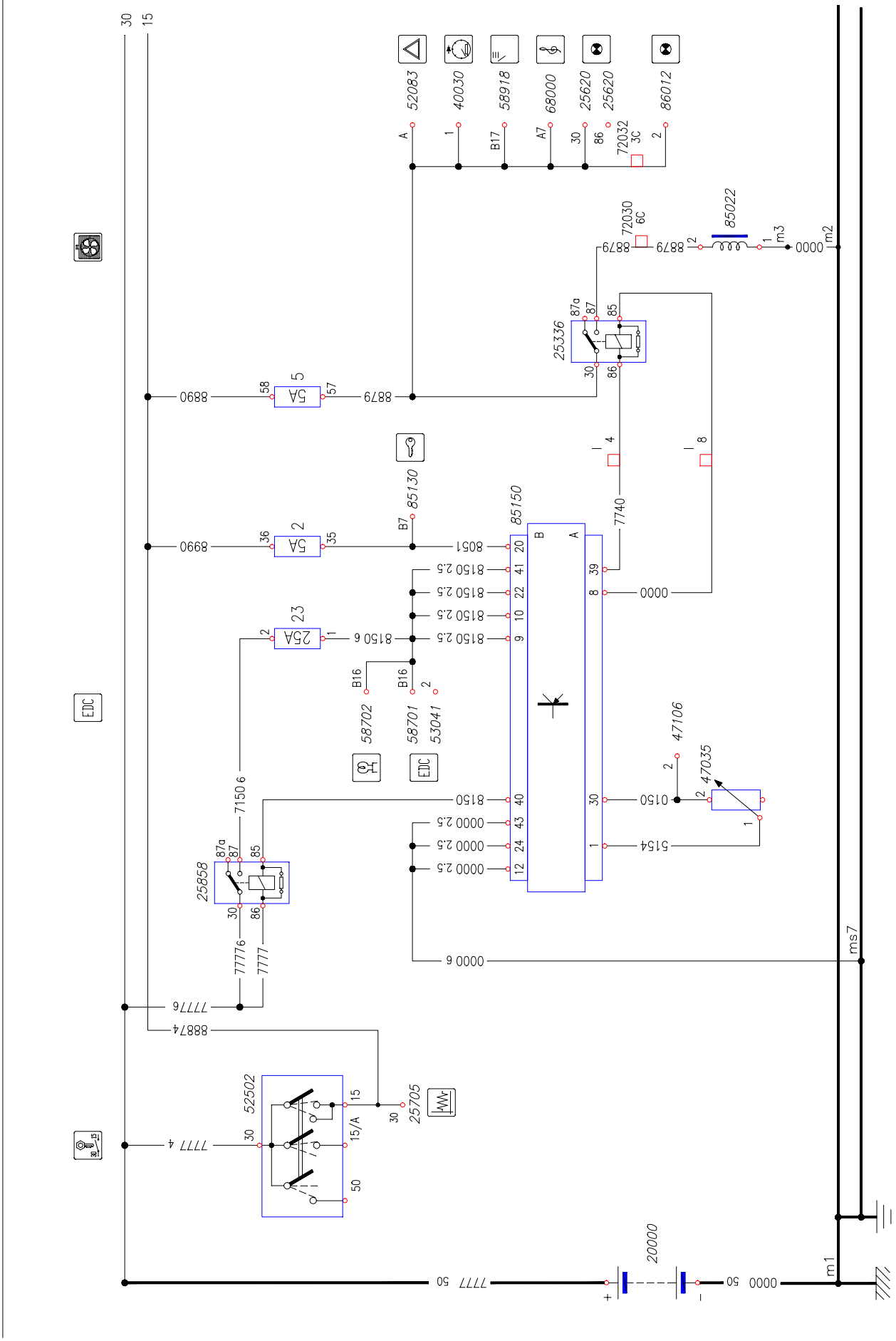

74260

Chart 23E: Engine cooling (.10 - .12 - EDC16)

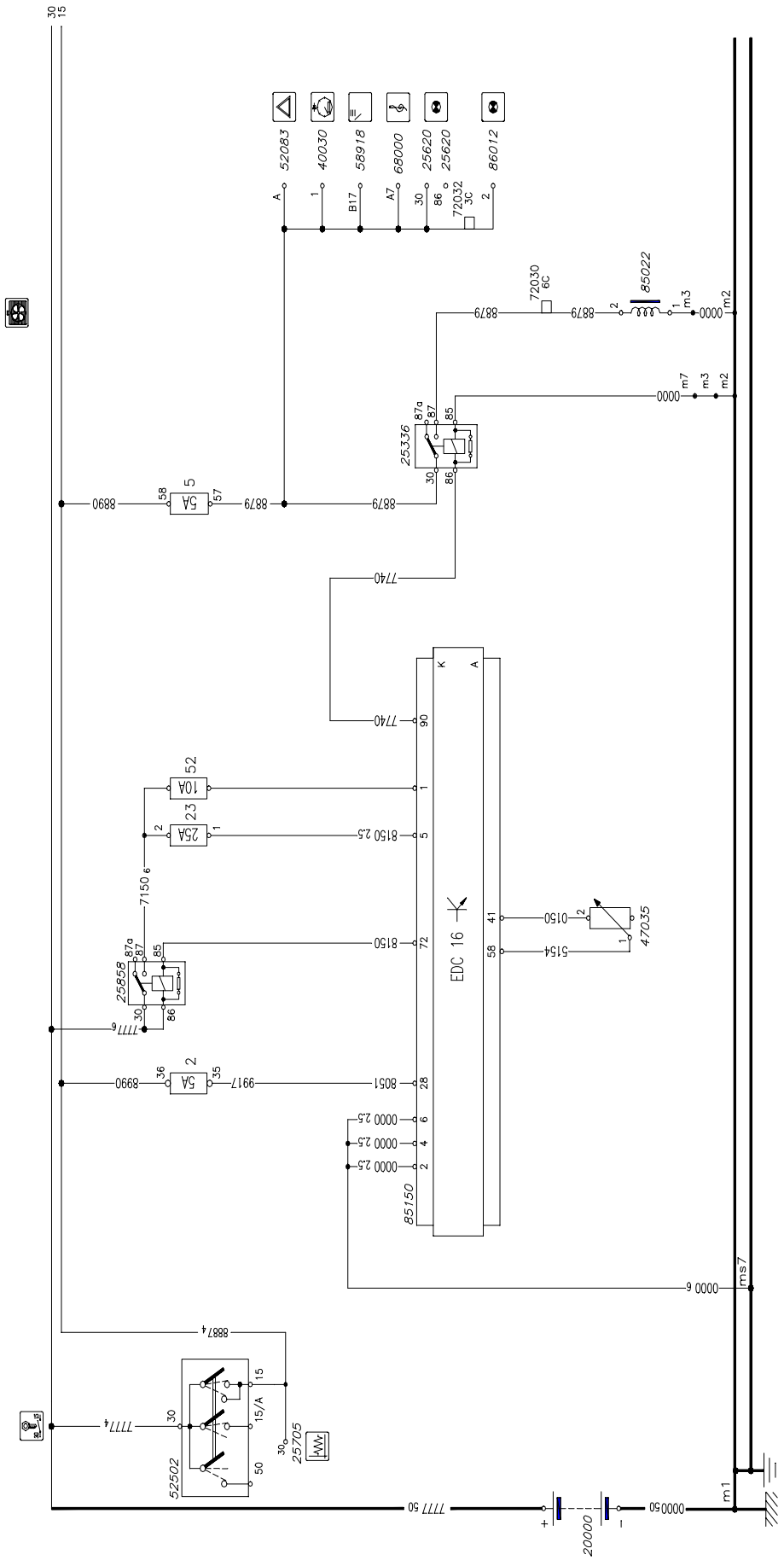

Chart 24A: EGR/exhaust gas electronic control system (.9)

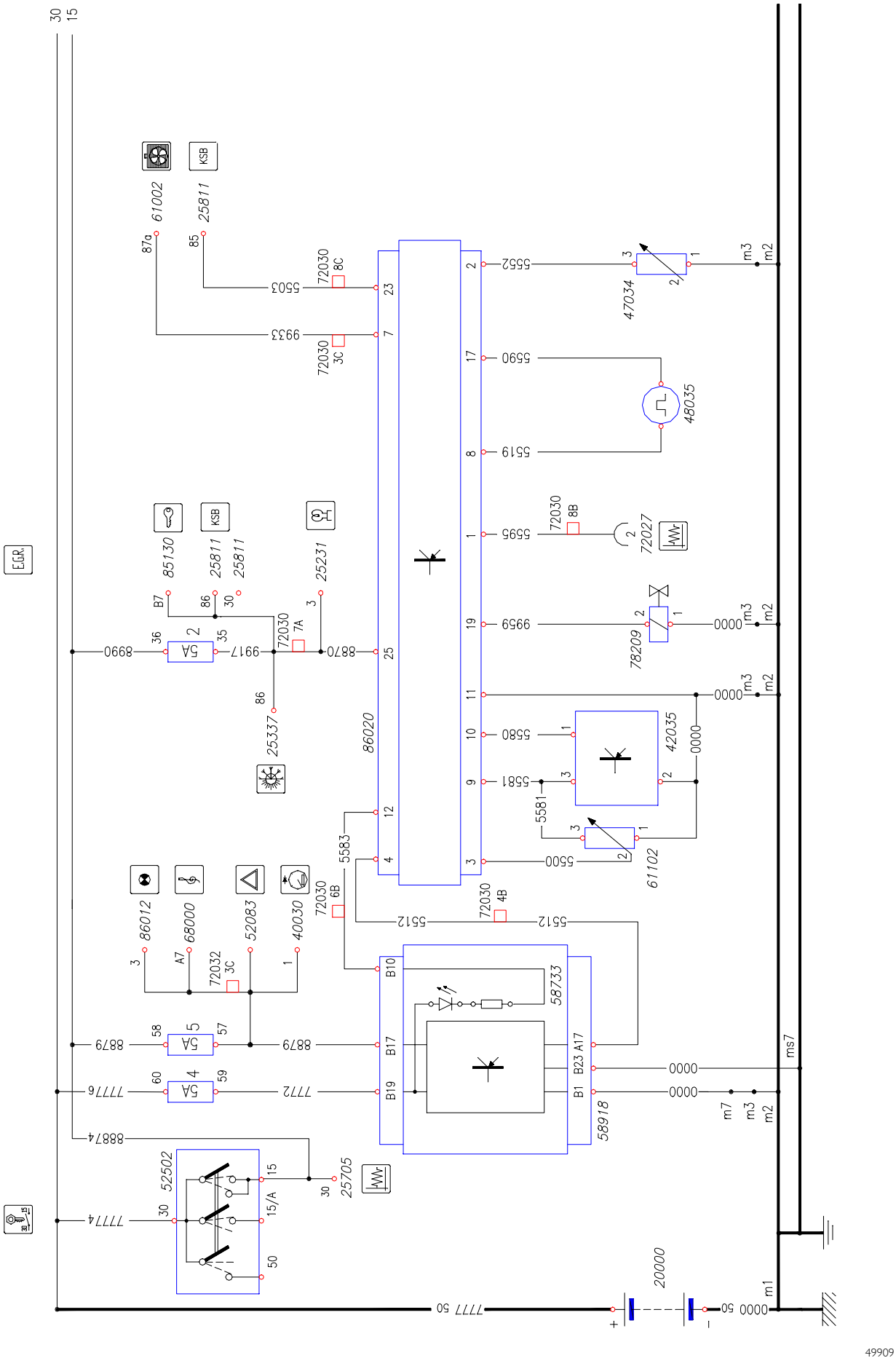

49909

Chart 24B: EGR/exhaust gas electronic control system for EDC (.13)

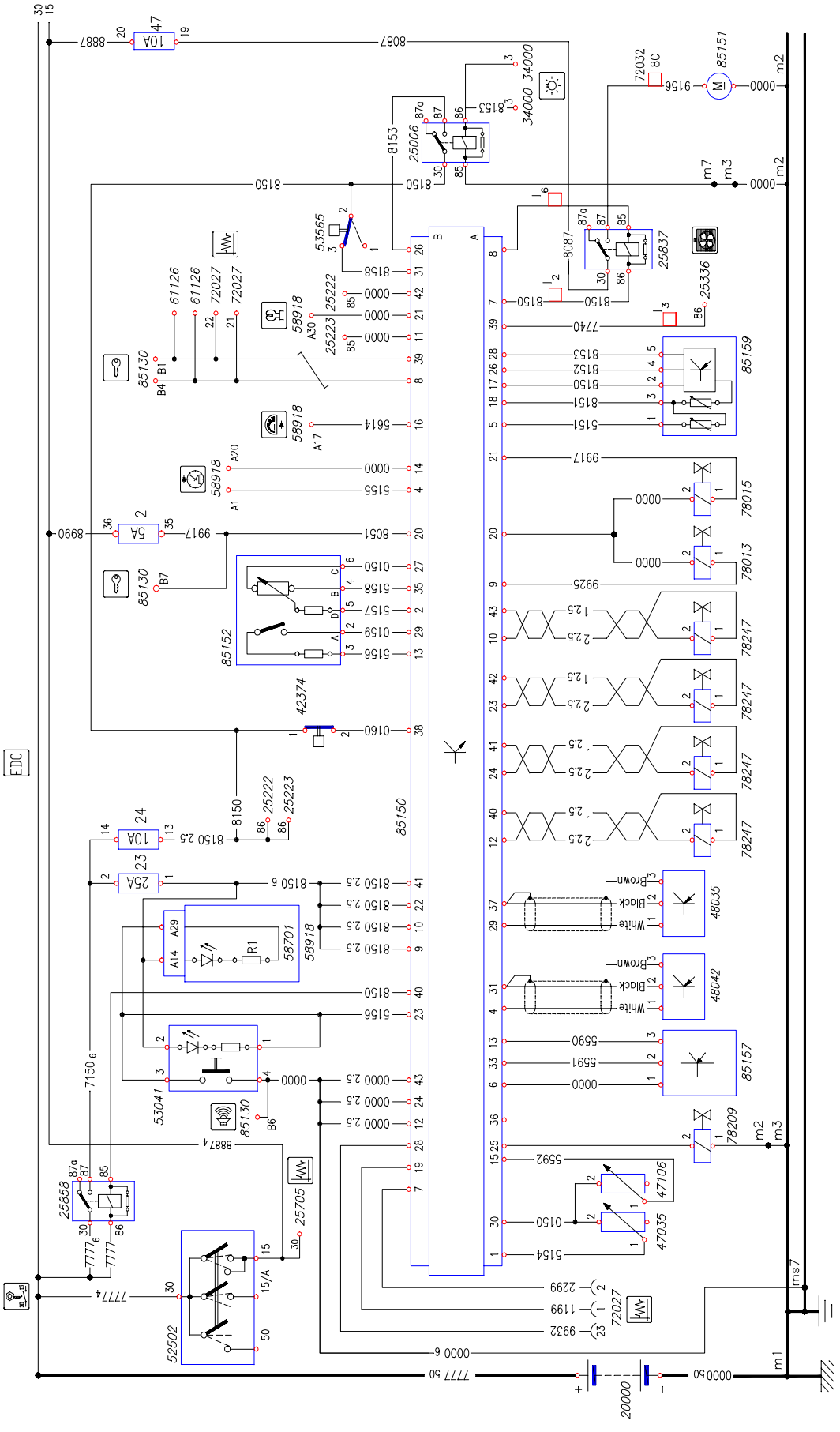

49908

Chart 24C: EGR/exhaust gas electronic control system for EDC (.10 - .12)

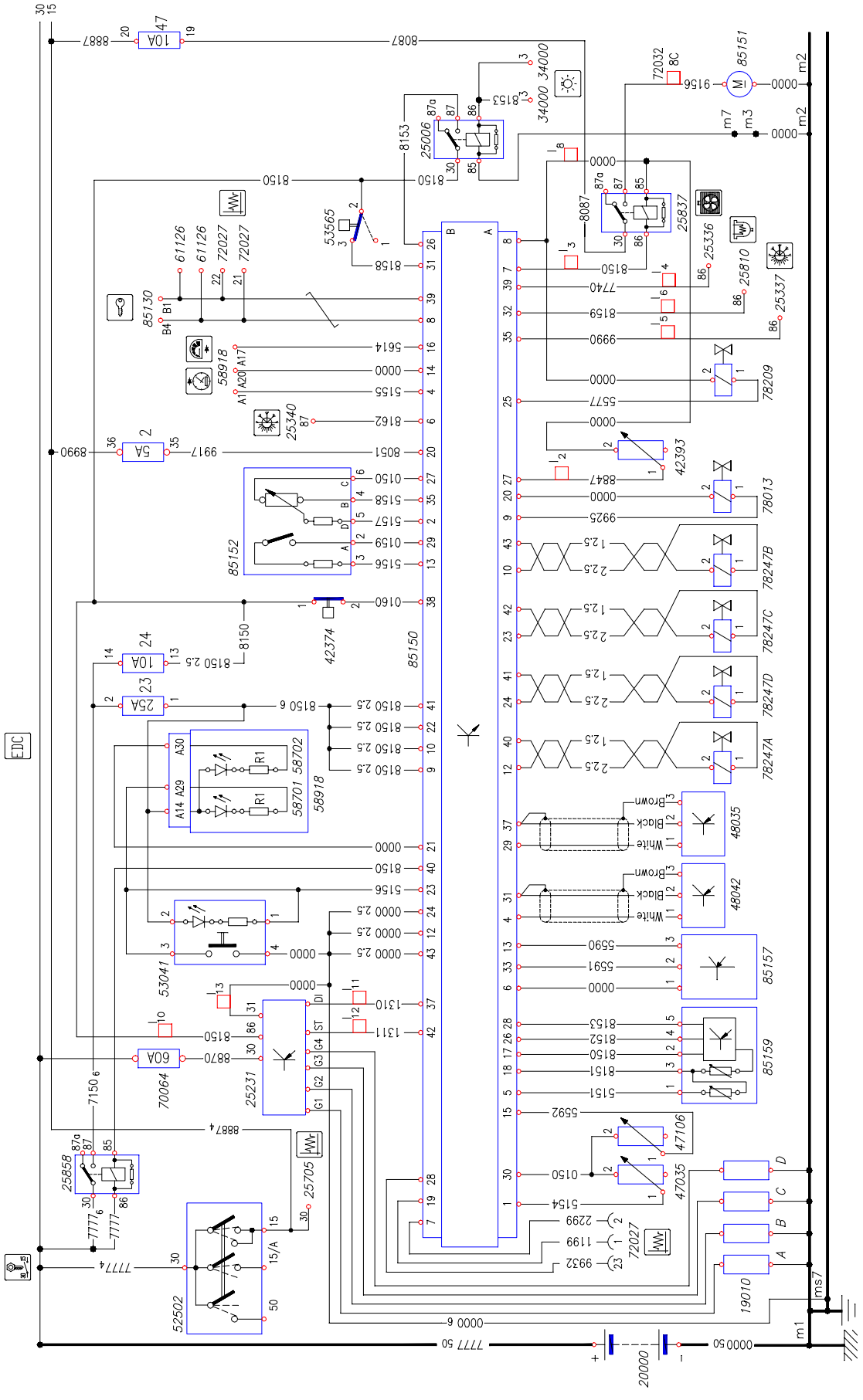

Chart 24D: EGR Exhaust gas electronic control system for EDC (.10 - .12 - EDC16)

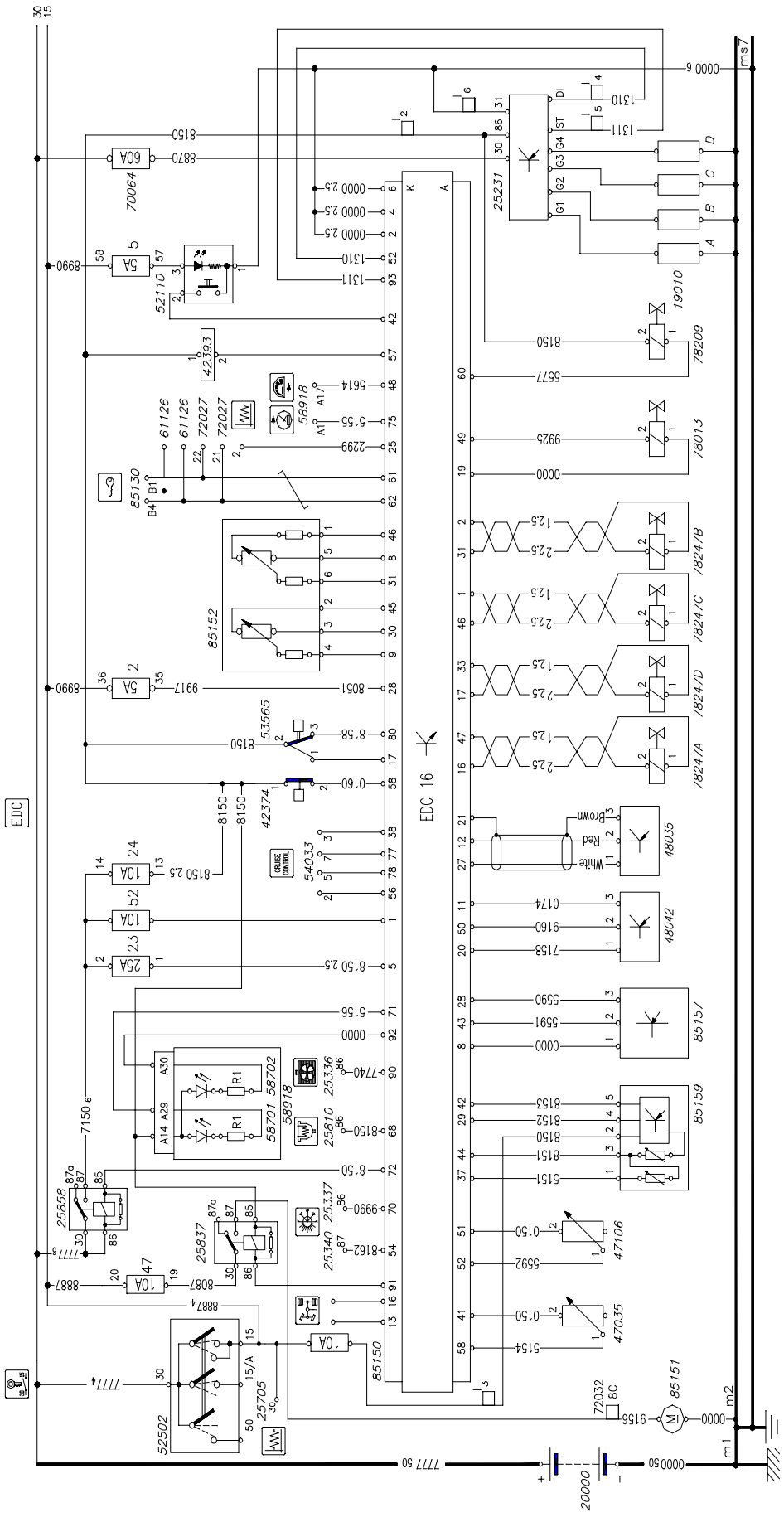

85718

Chart 25A: Spark lead variator (.9)

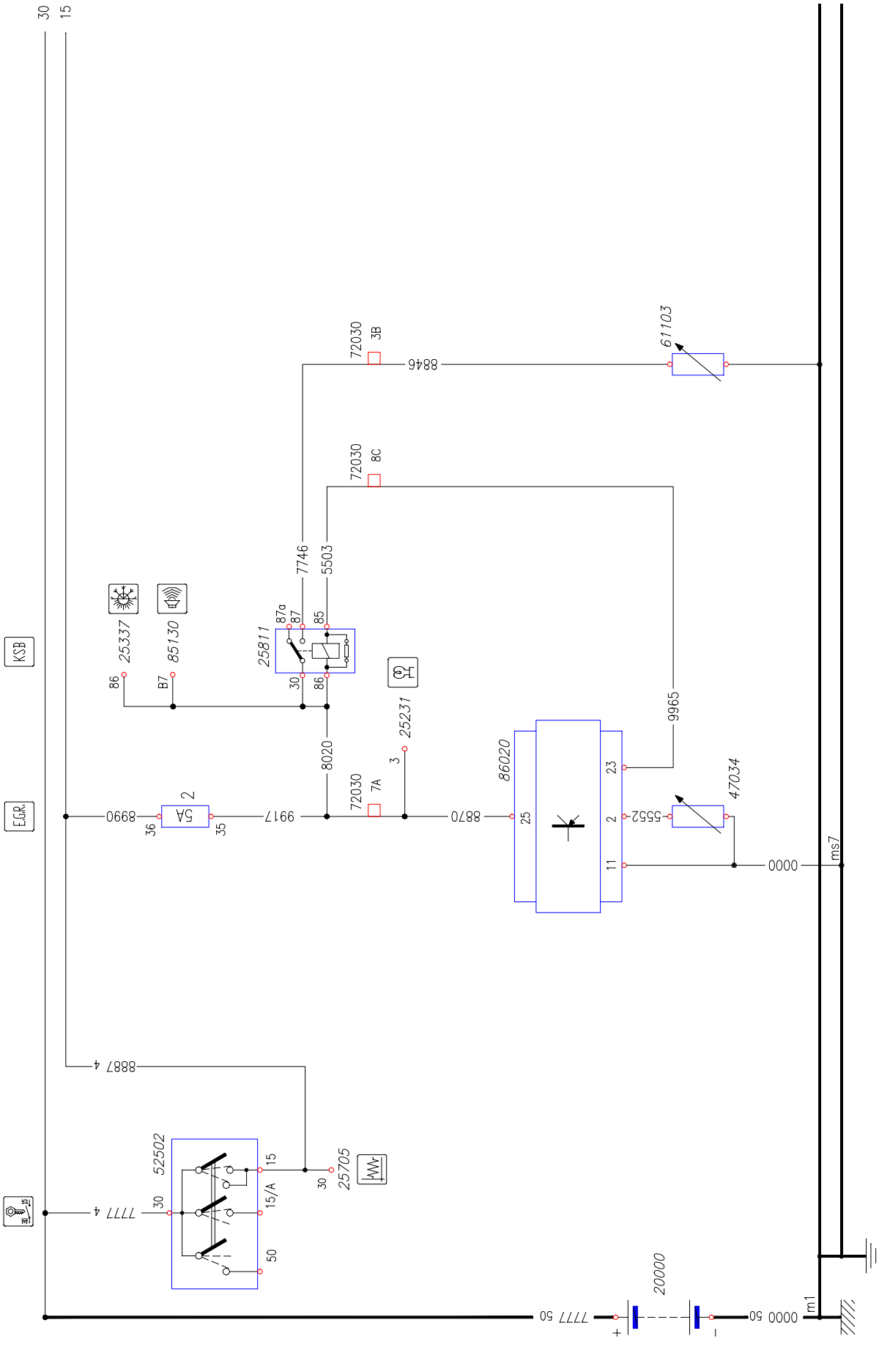

Chart 25B: Spark lead variator (.11)

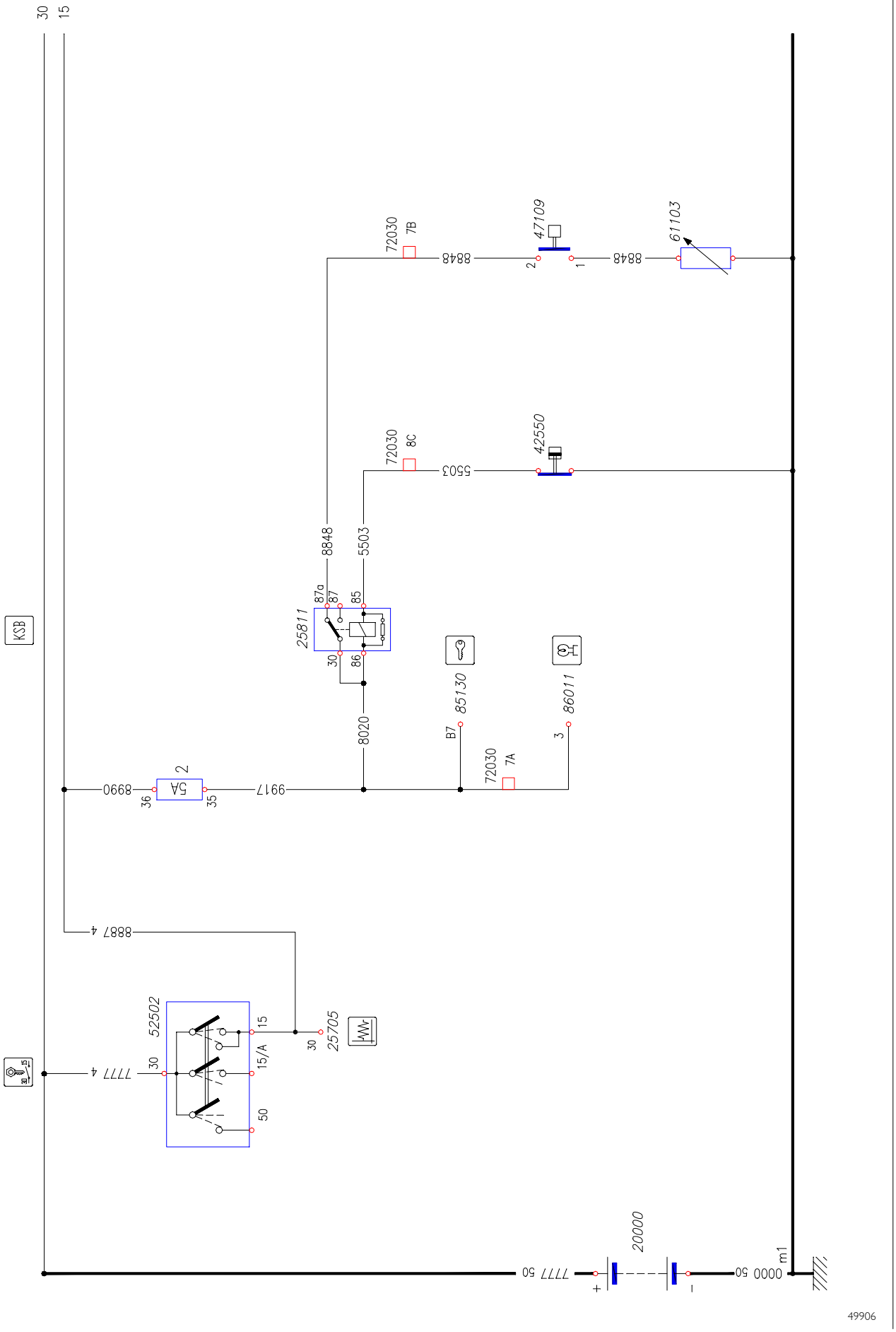

Chart 26A: E.D.C. (.13)

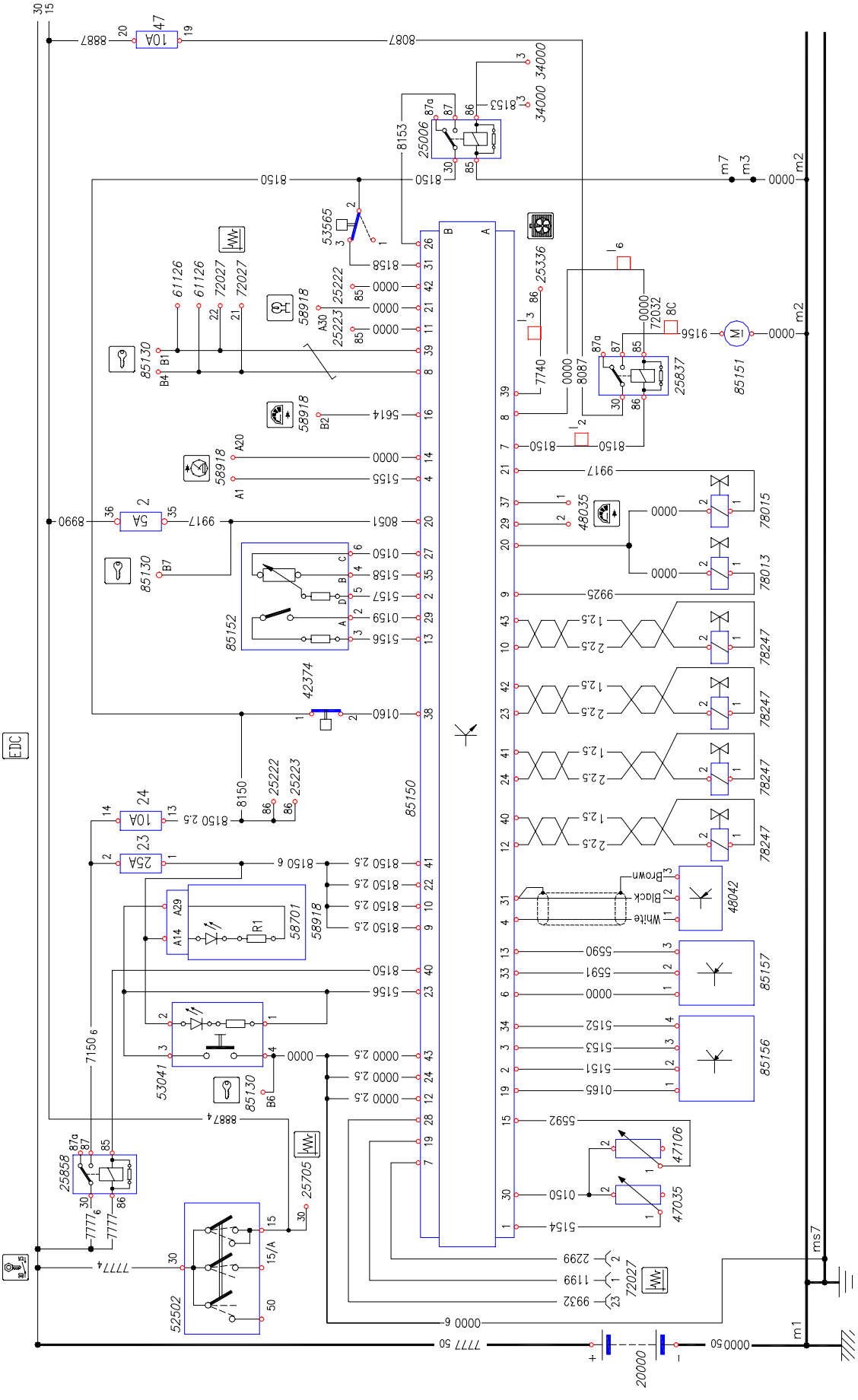

Chart 26B: E.D.C. with VGT (.15)

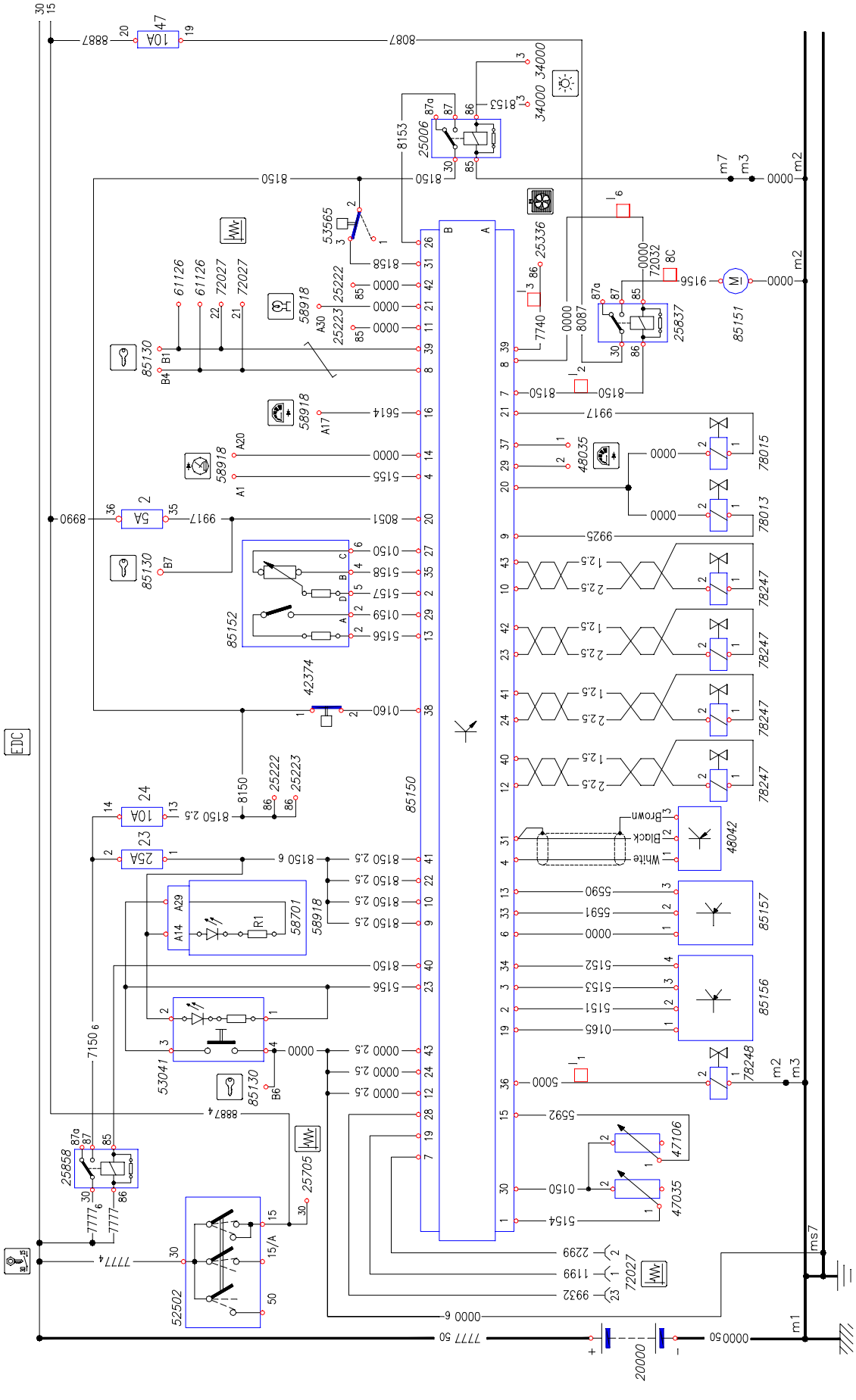

49904

Chart 26C: E.D.C. with waste gate (.13)

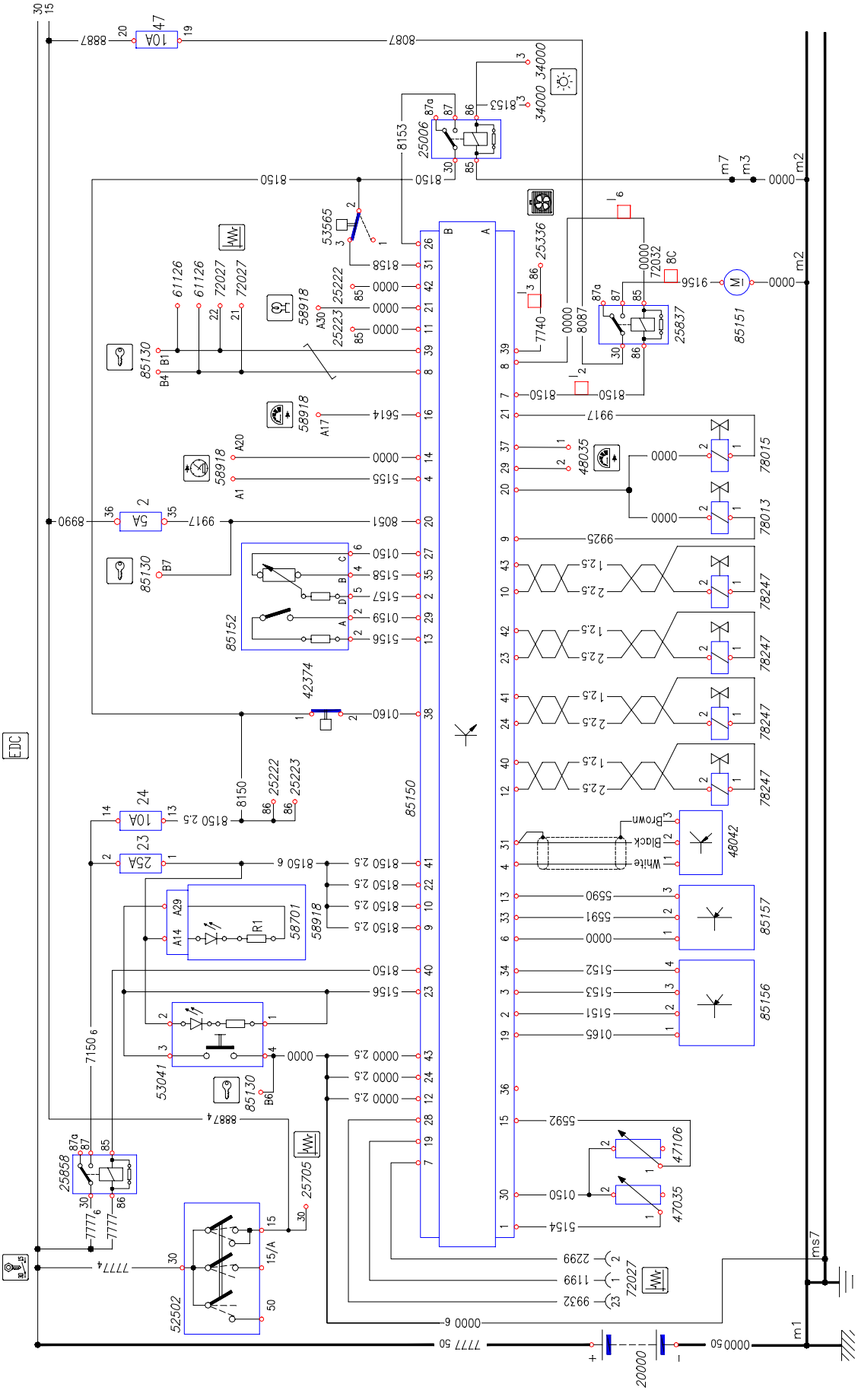

49903

Chart 26D: E.D.C. without EGR (.10 - .12)

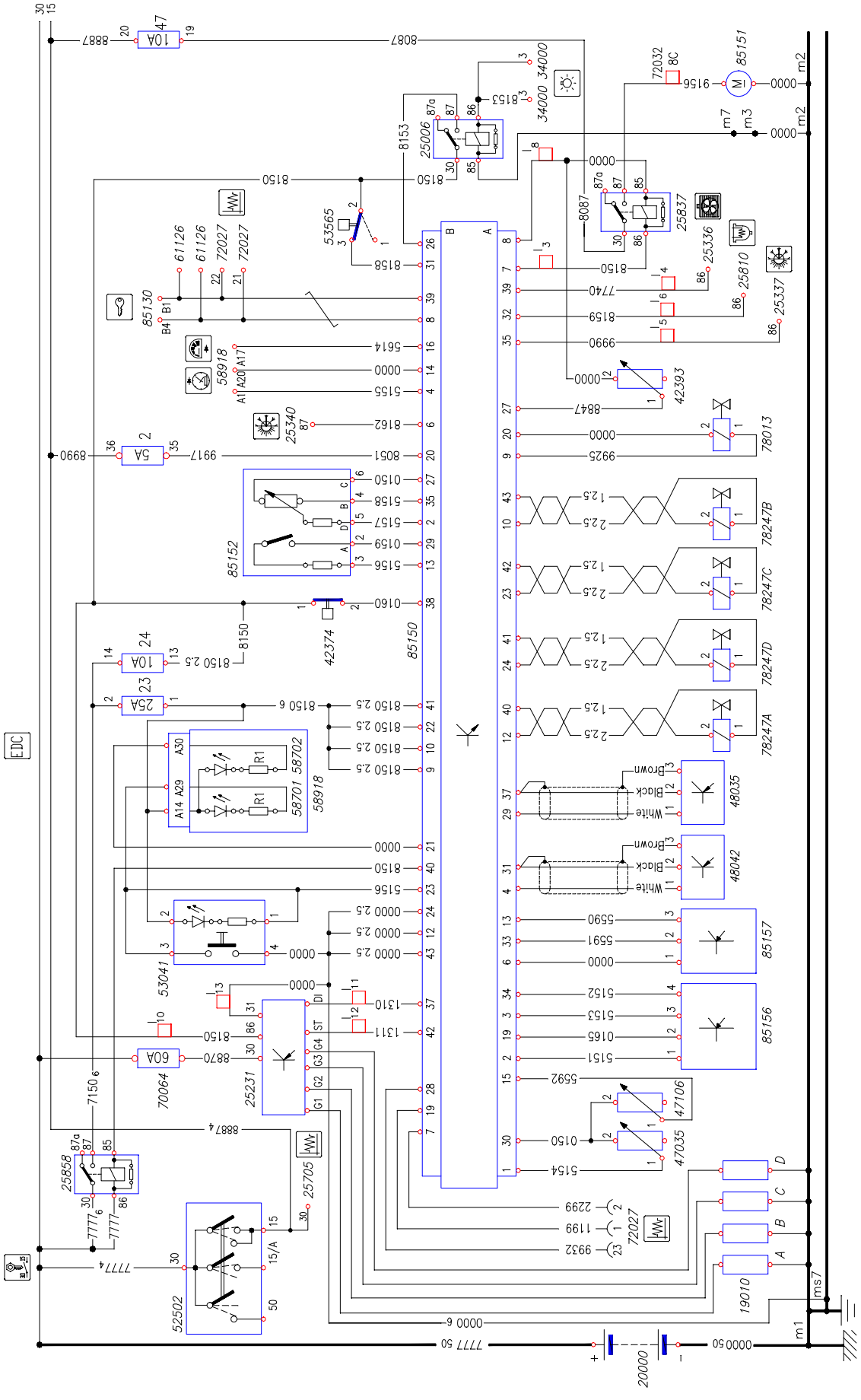

74262

Chart 26E: E.D.C WITHOUT EGR (.10 - .12 - EDC16)

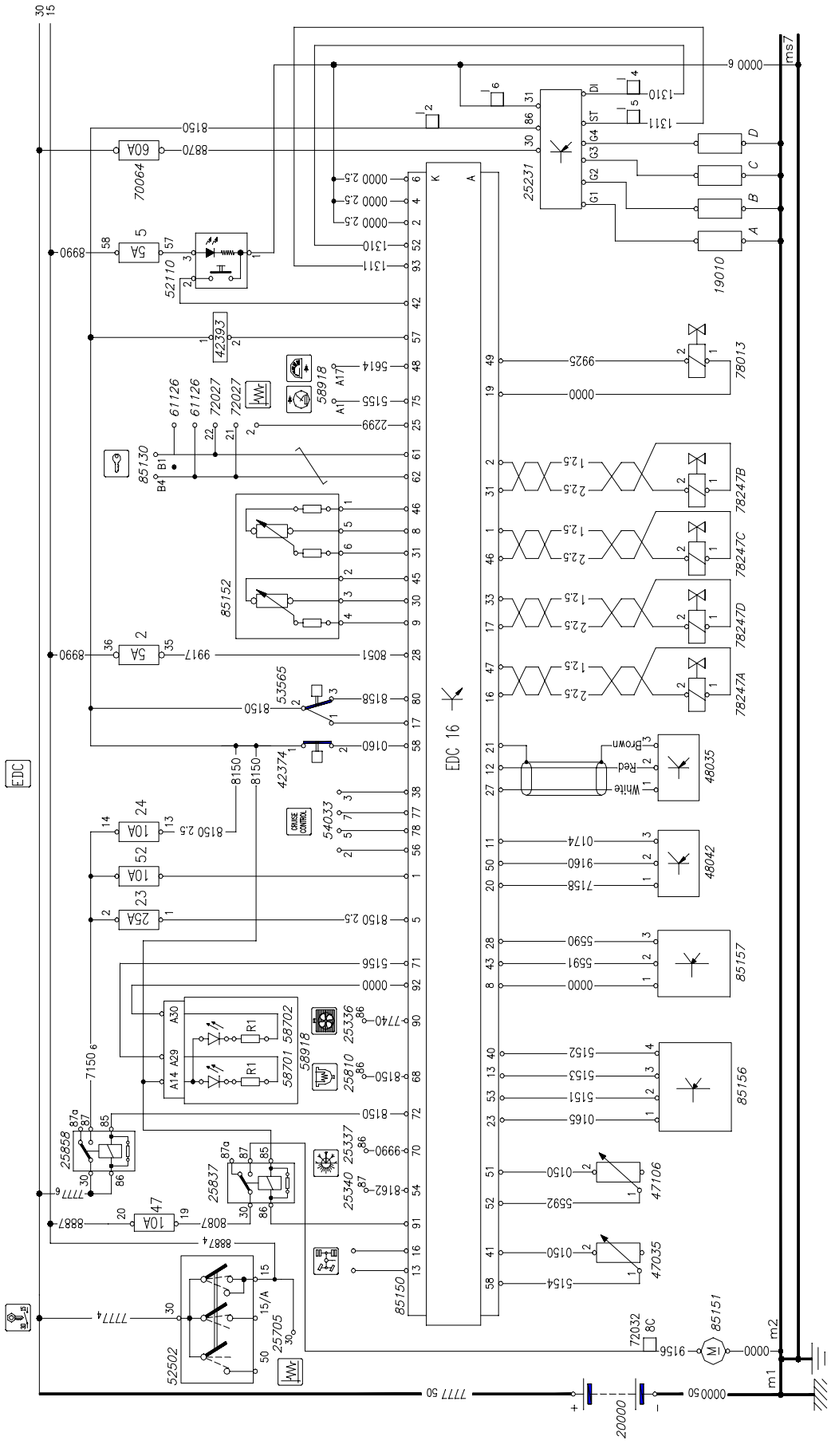

Chart 27A: Heated fuel filter (.9 - .11) / OPT 2287

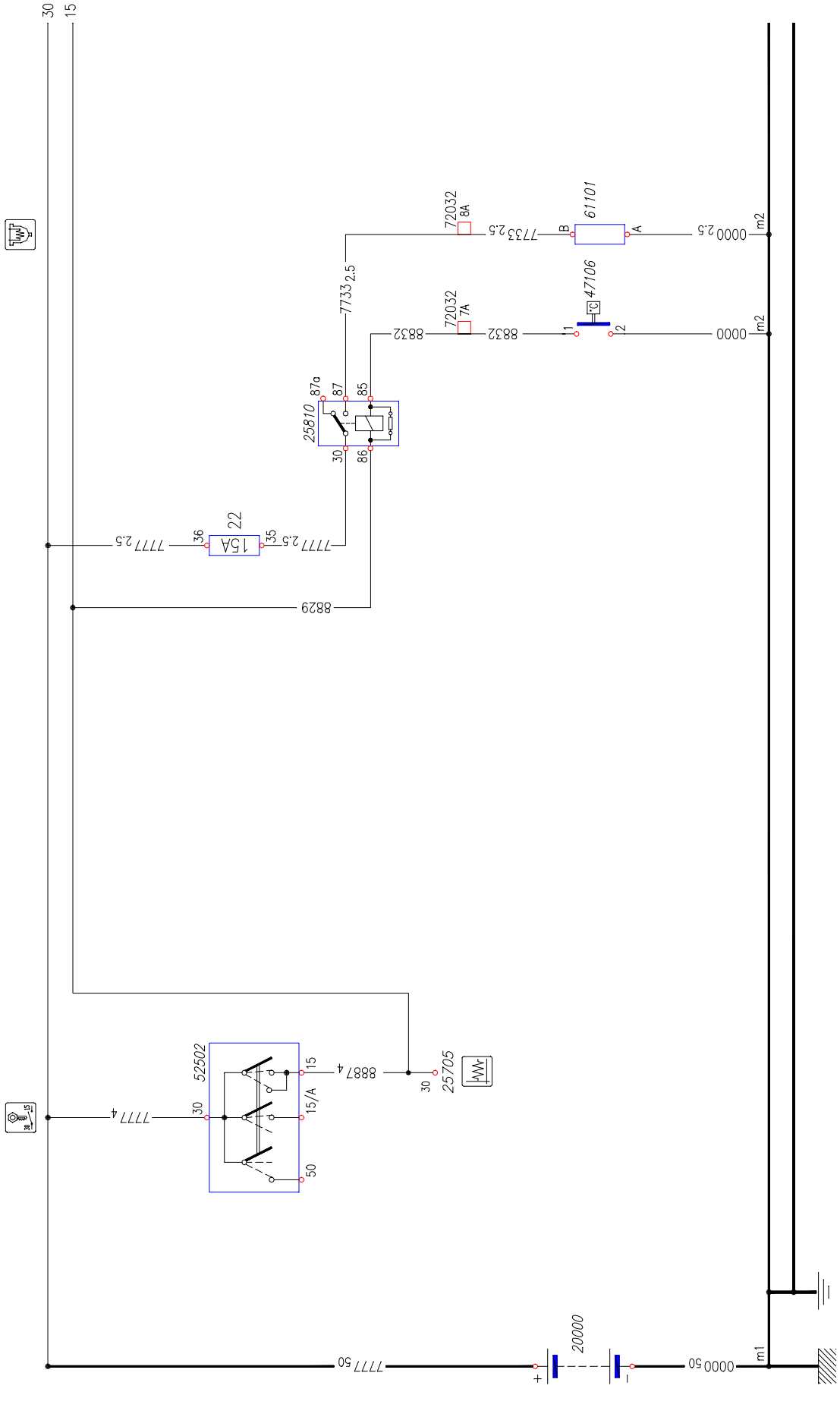

Chart 27B: Heated fuel filter (.13 - .15)

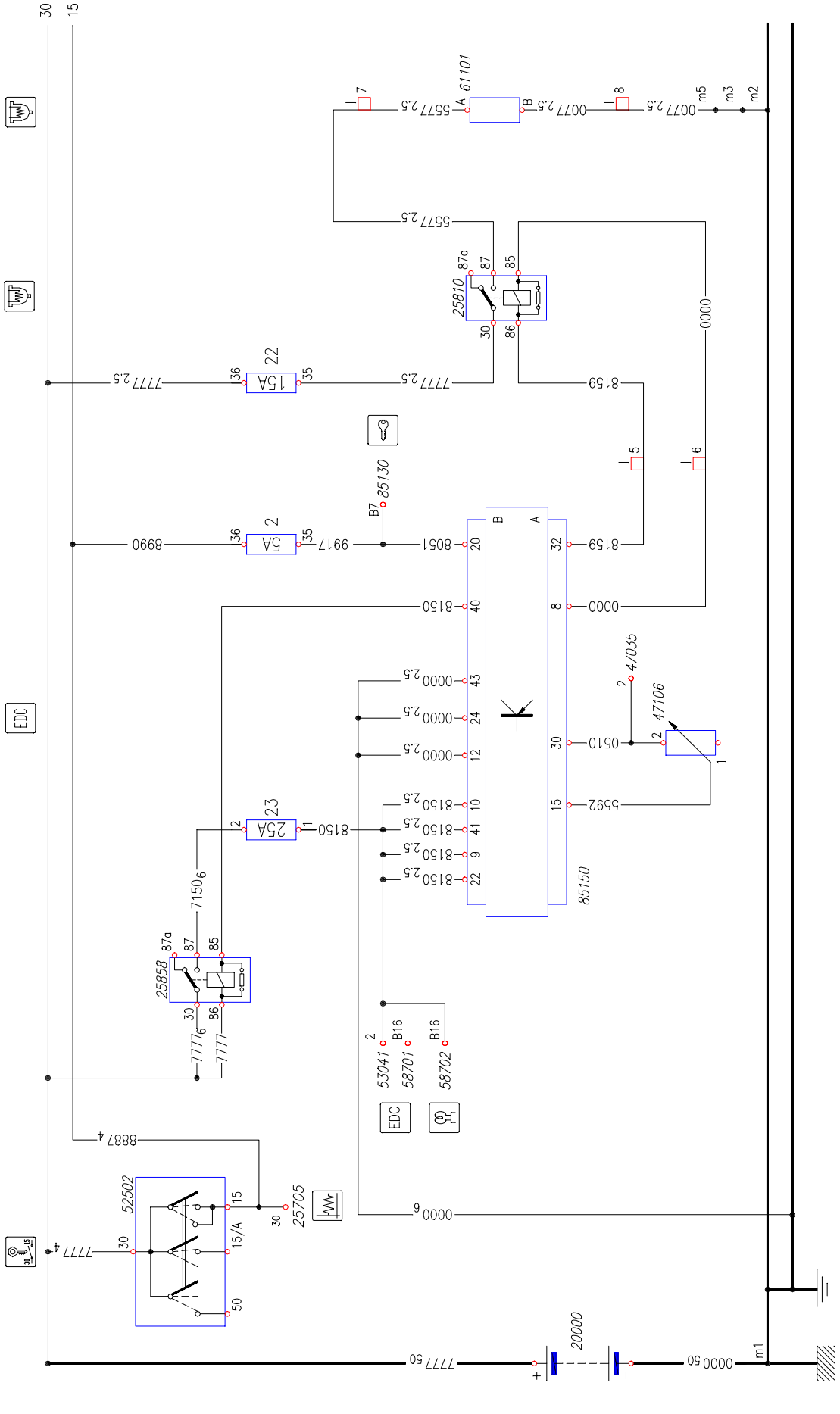

Chart 27C: Heated fuel filter (.10 - .12)

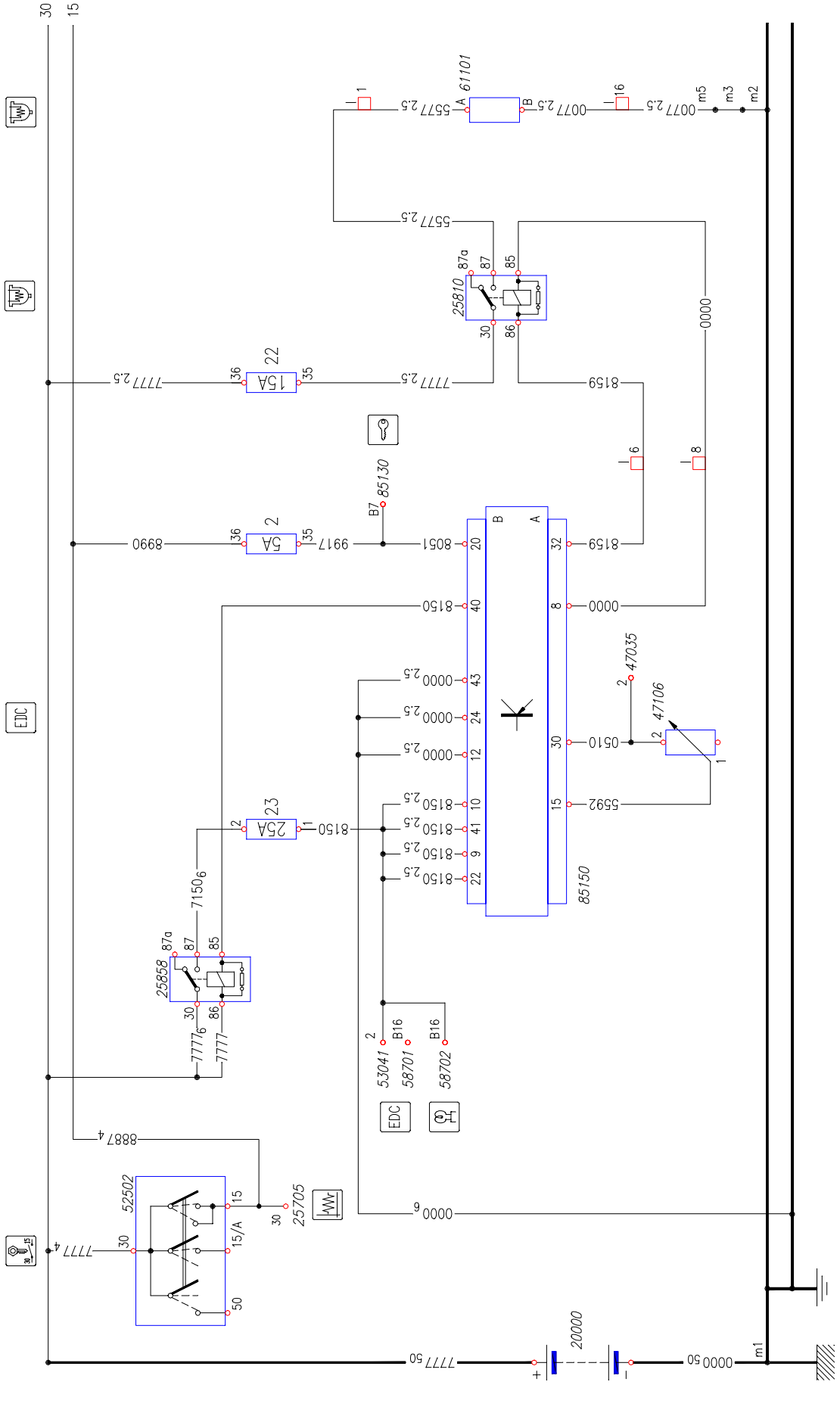

Chart 27D: Heated fuel filter (.10 - .12 - EDC16)

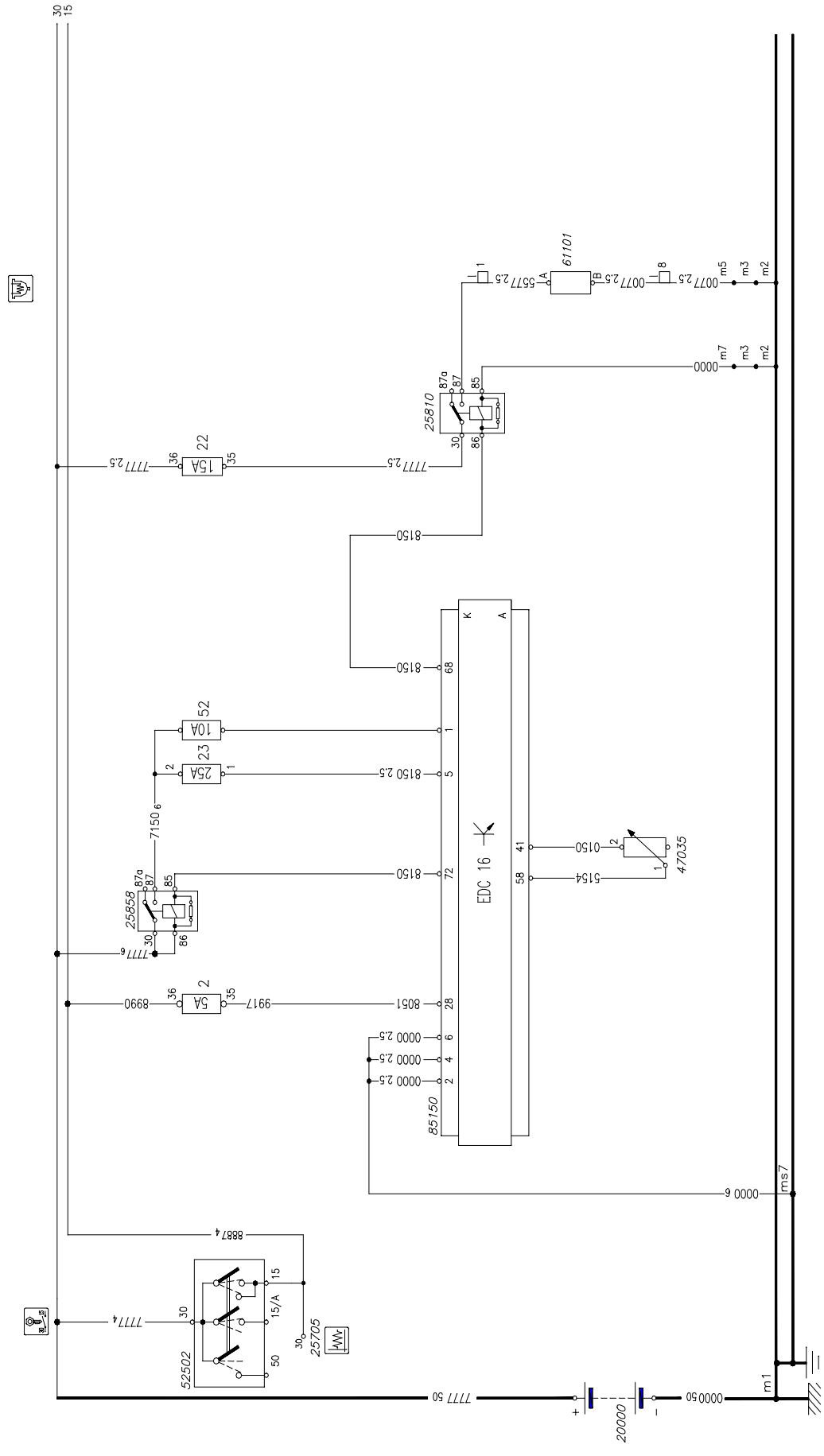

Chart 28A: Power window operator and passenger side / OPT 693

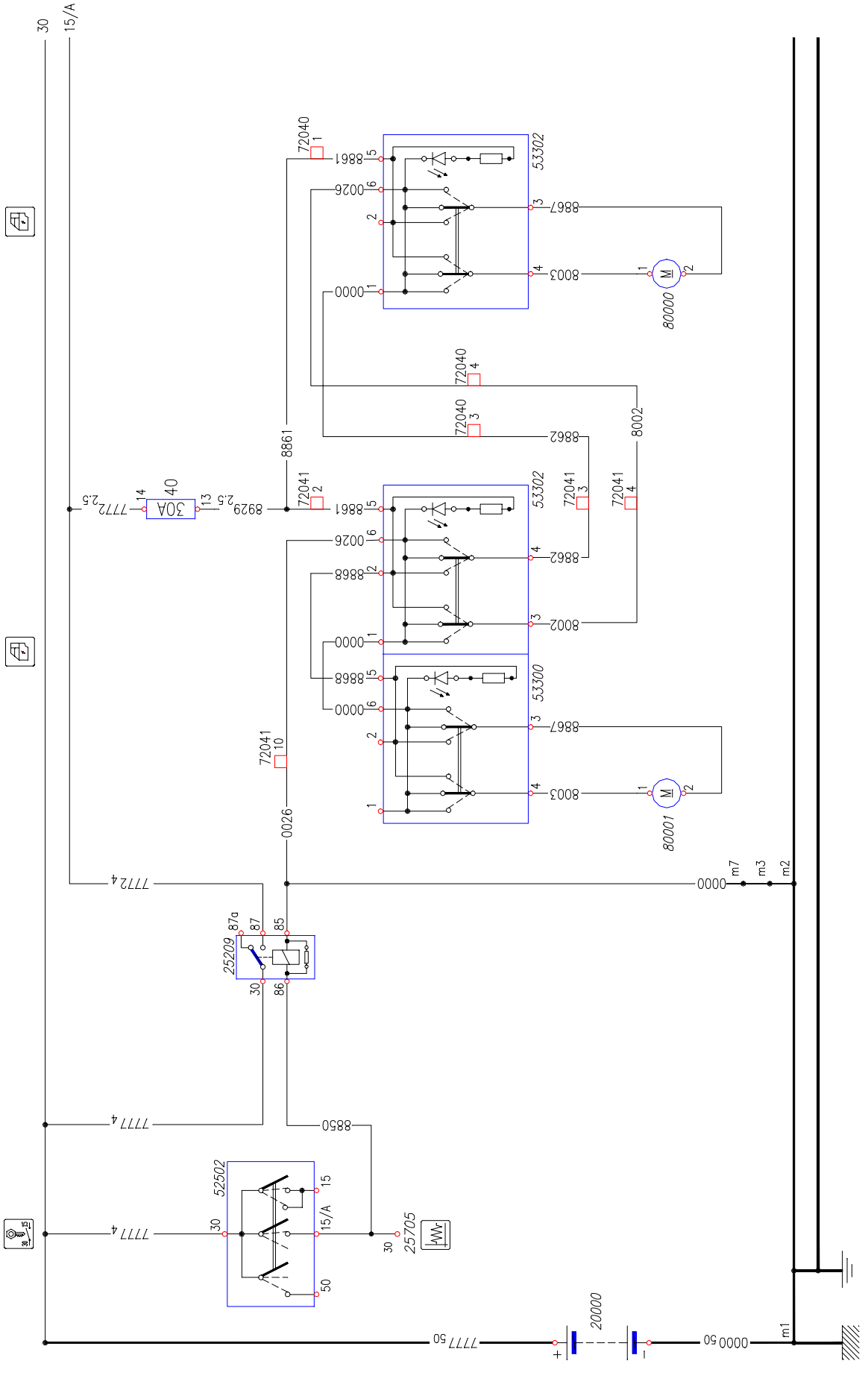

Chart 28B: Power window operator side / OPT 4028

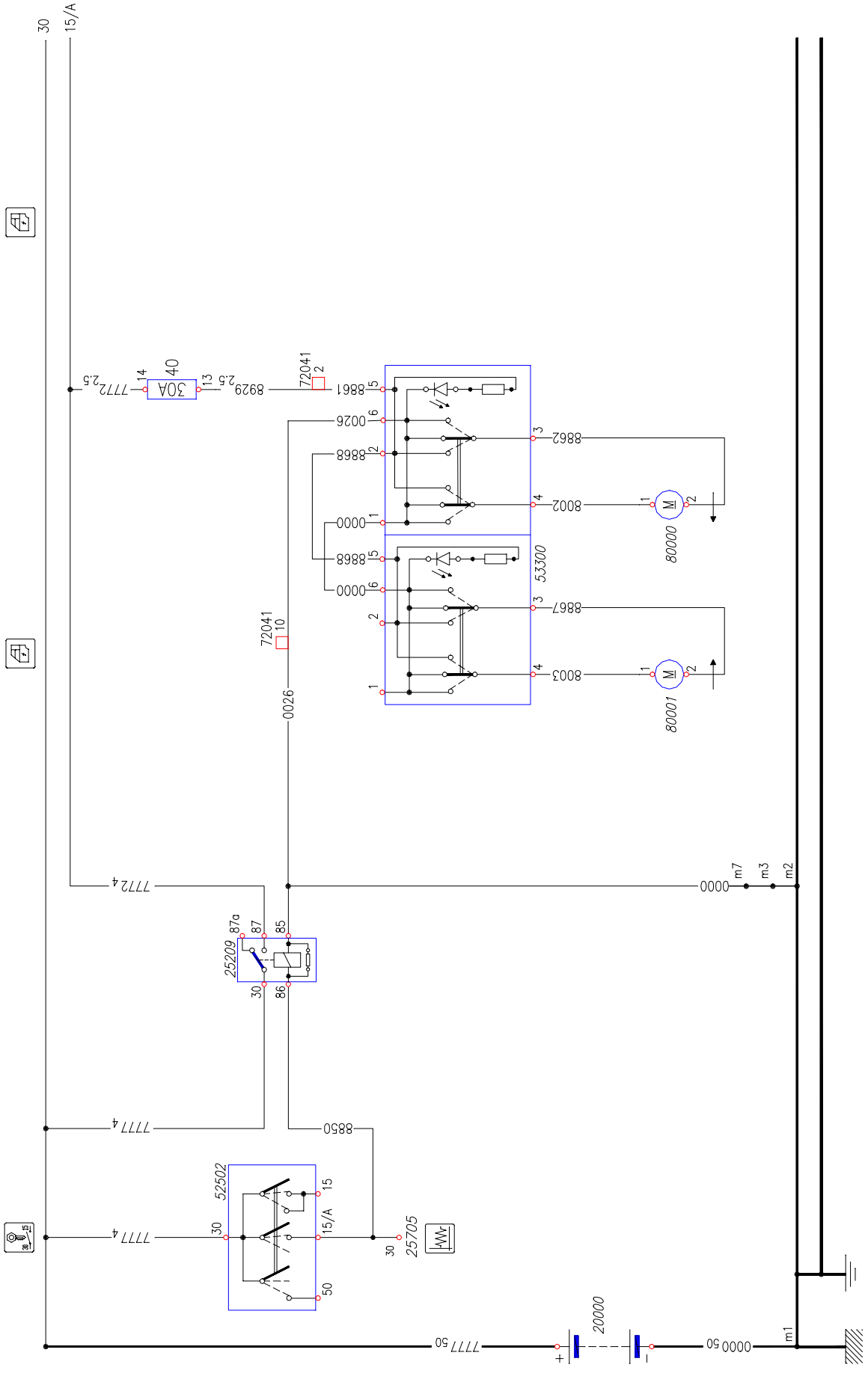

Chart 28C: Power window operator and passenger side (.10 - .12)

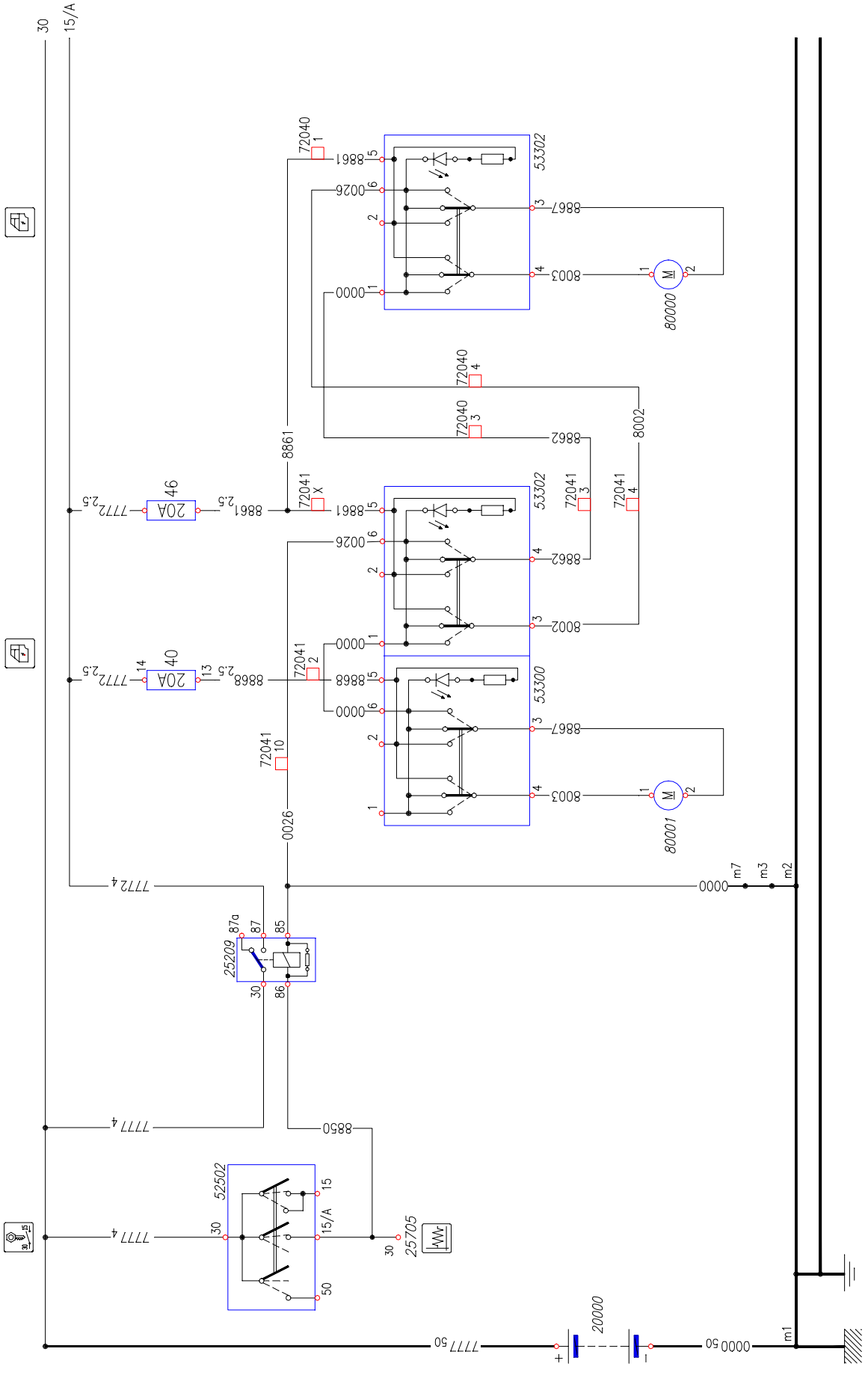

74264

Chart 29: Heated rearview mirrors / OPT 697

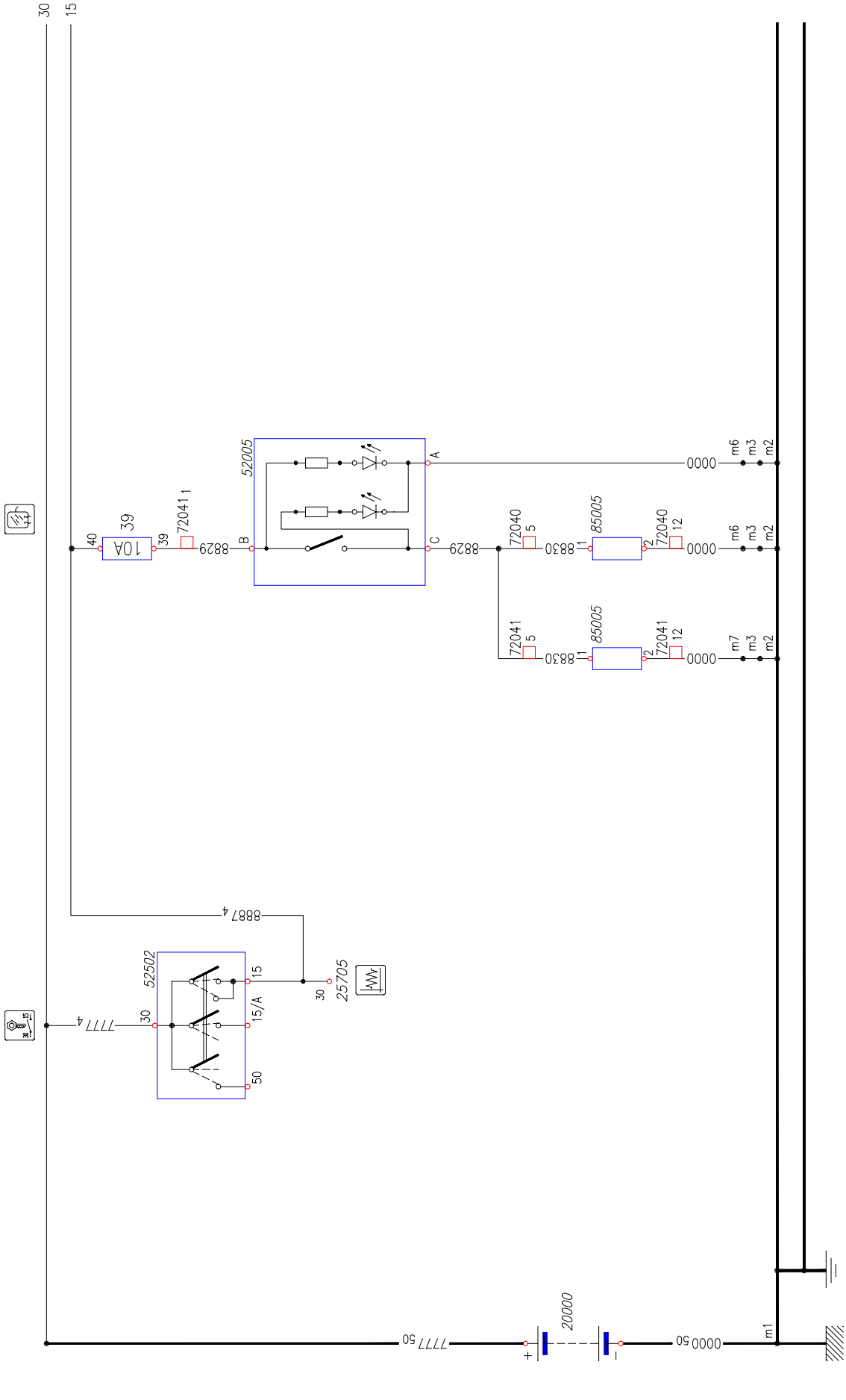

Chart 30: Rearview mirror adjustment / OPT 2714

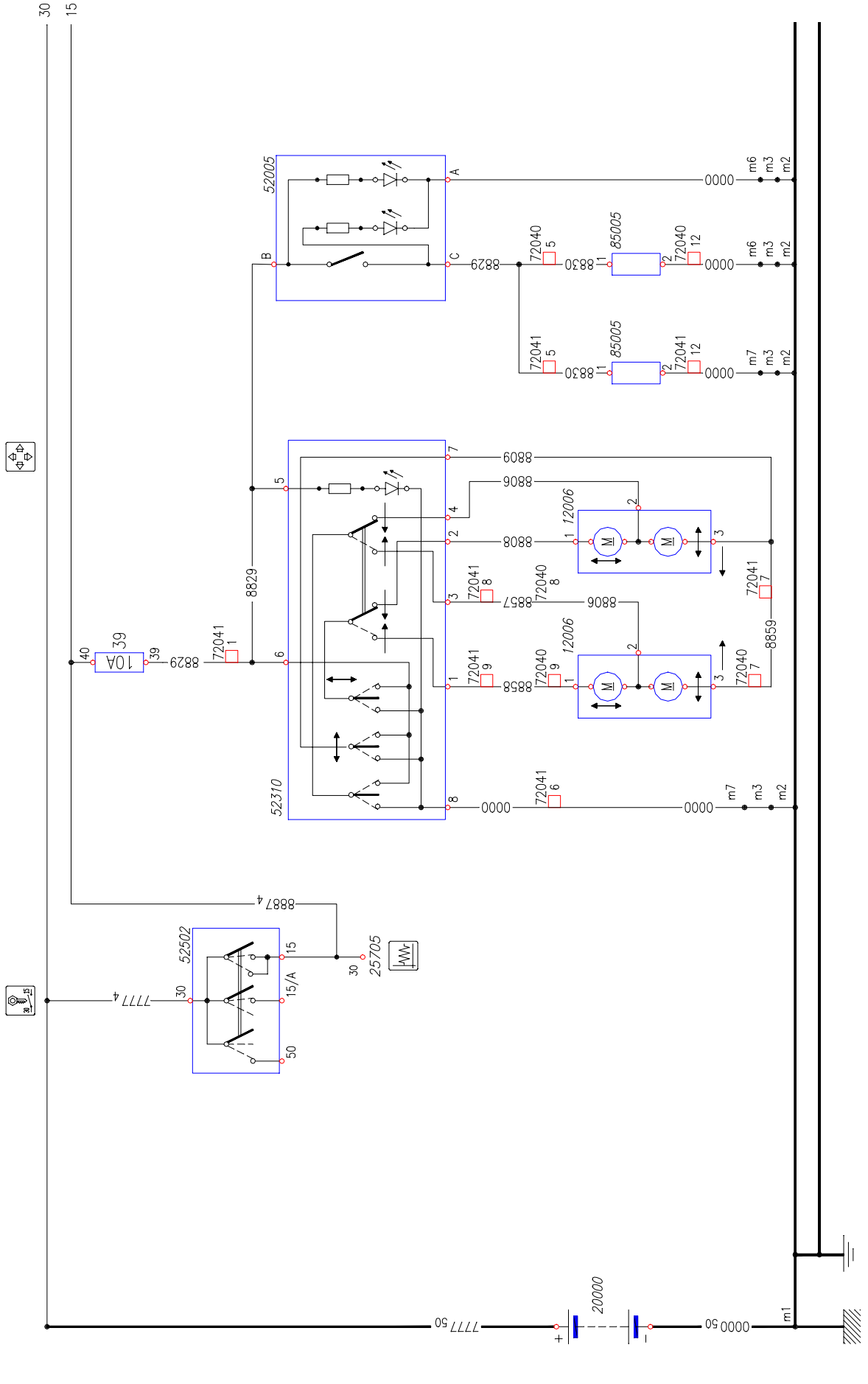

Chart 31: Heated windscreen / OPT 685

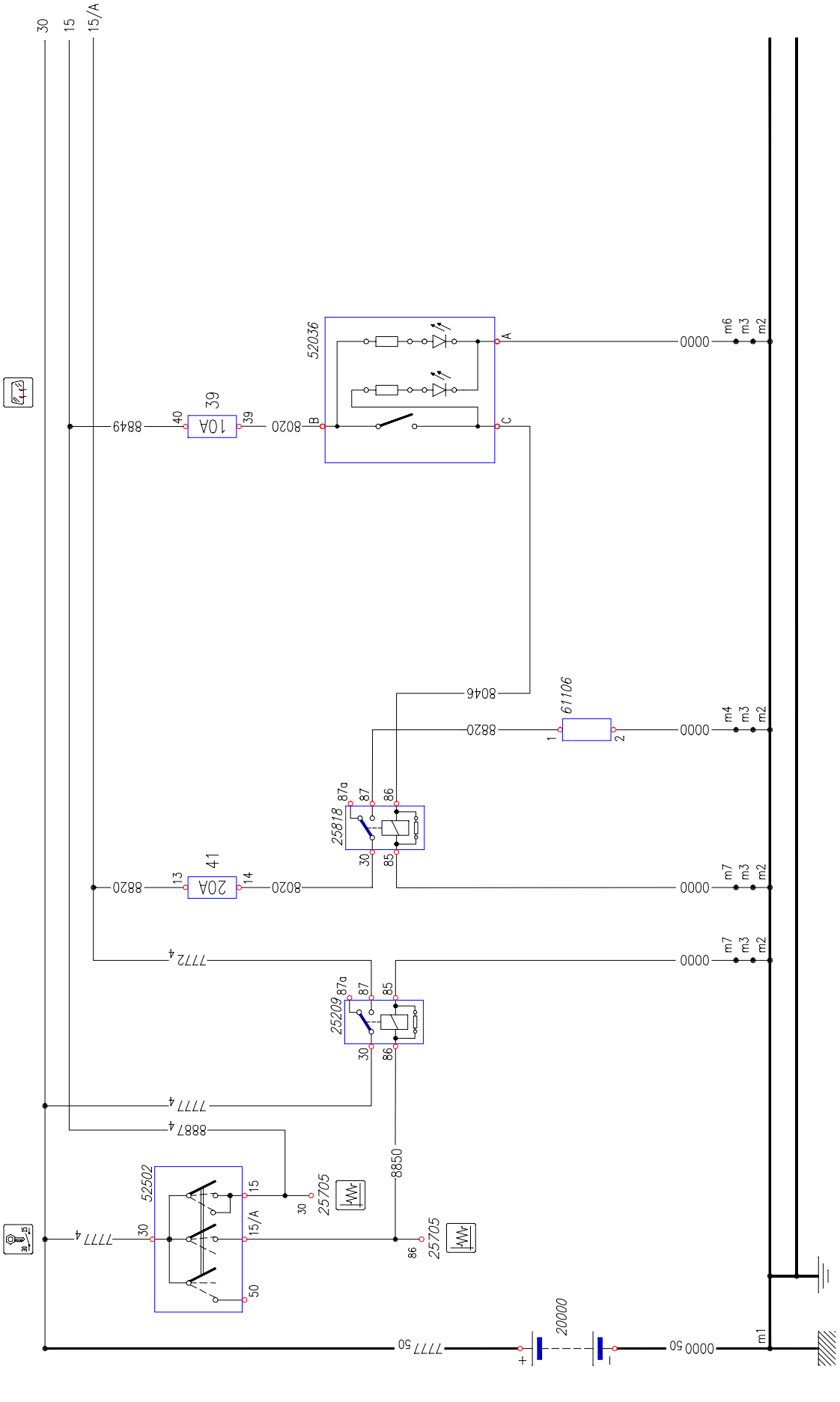

Chart 32: Heated rear window / OPT 6815

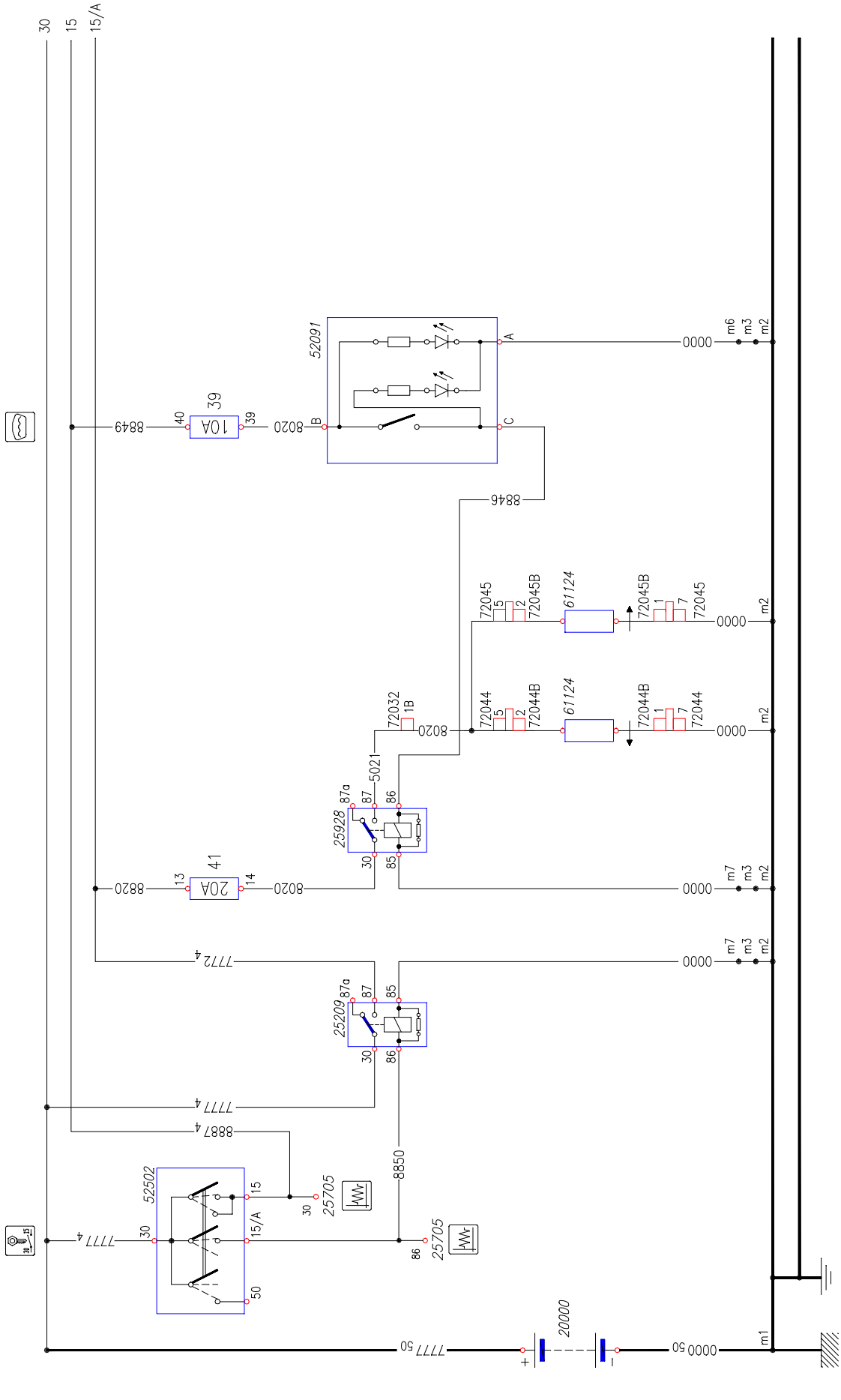

Chart 33: ABS/EBD/ABD / OPT 2091

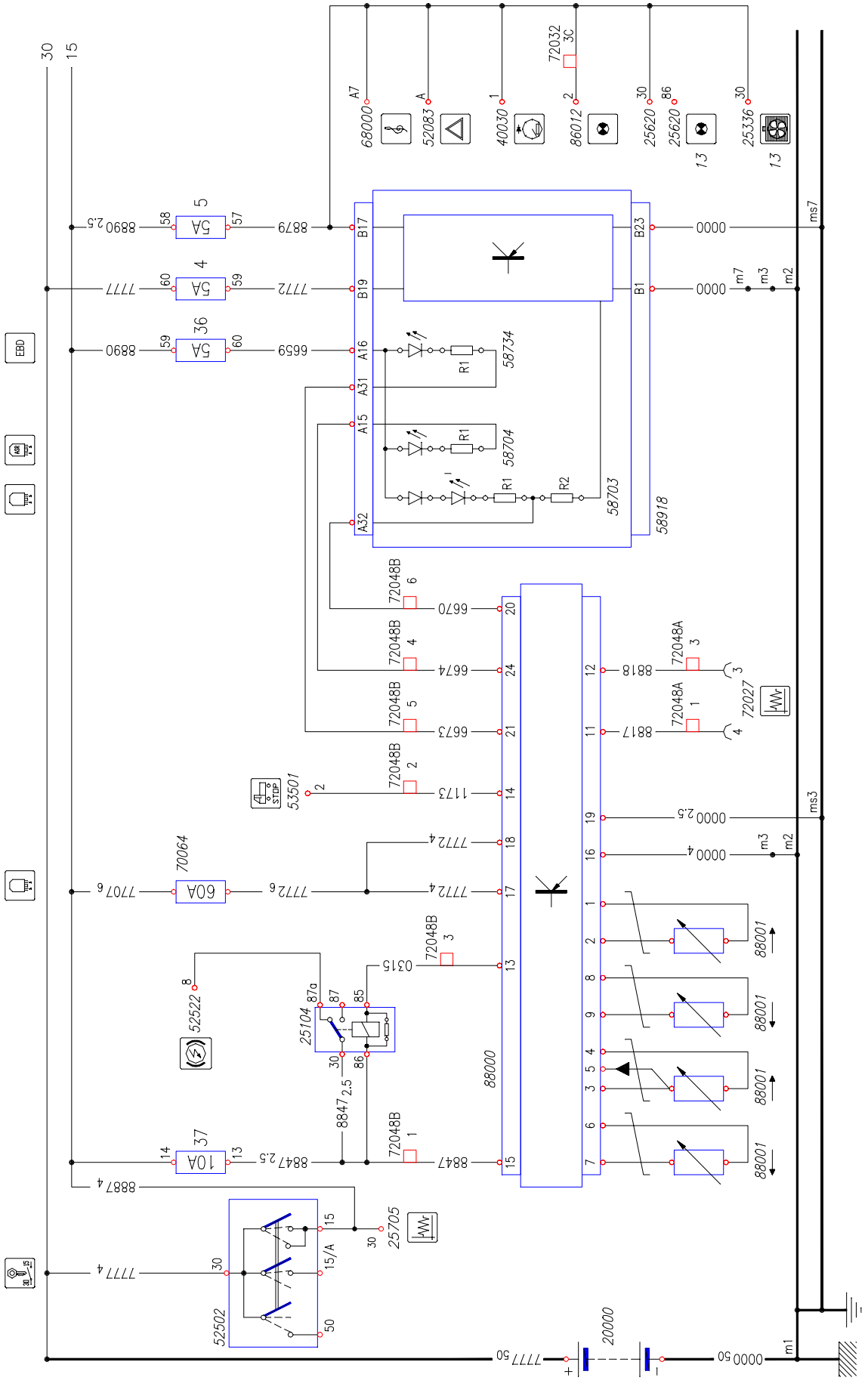

Chart 34A: E.C.A.S. without reserve air reservoir (.9 - .10 - .11 - .12 . - 13)

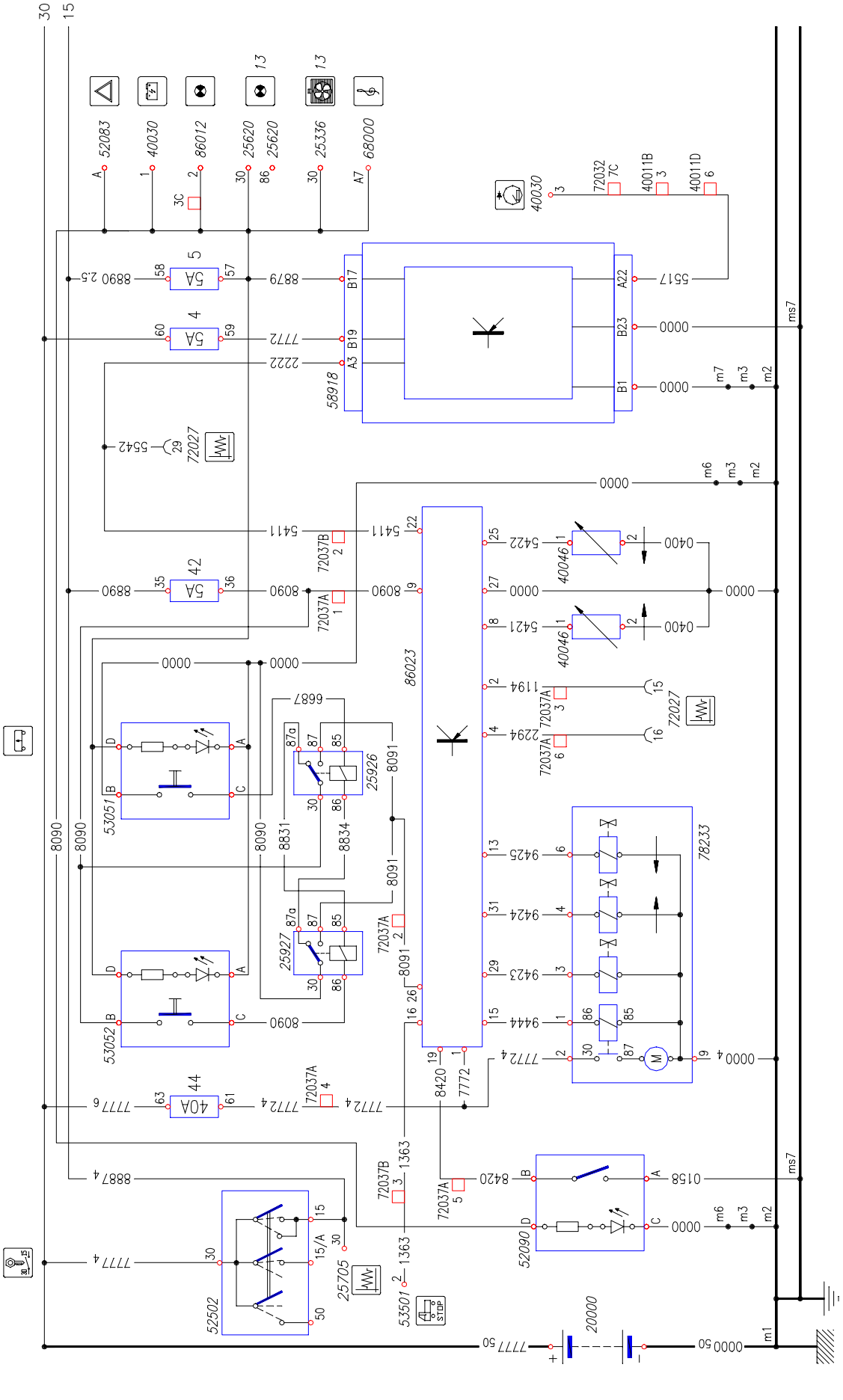

Chart 34B: E.C.A.S. with reserve air reservoir (.9 - .10 - .11 - .12 . - 13)

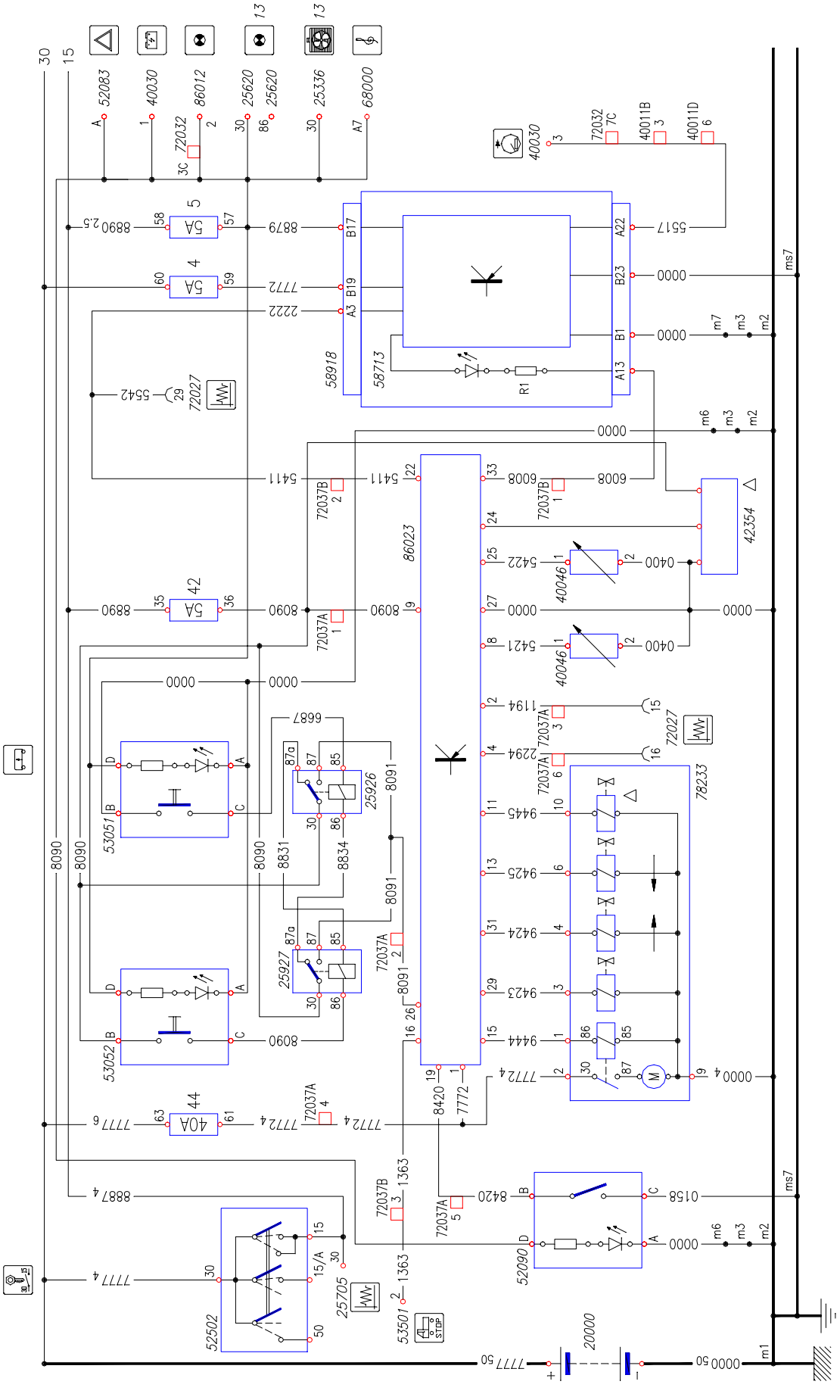

Chart 34C: Vb Techniek (35C - 40C - 45C - 50C)

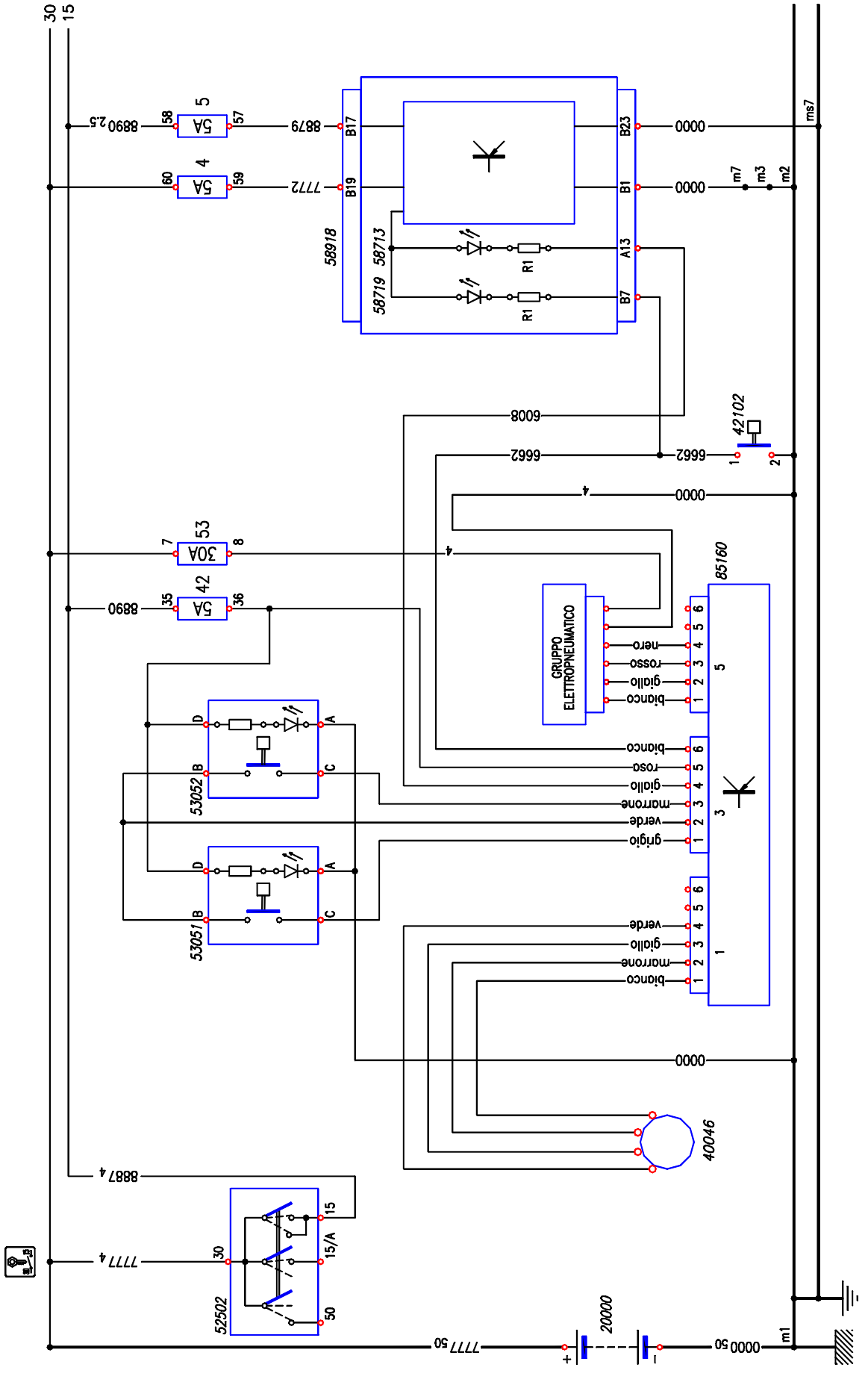

Chart 34D: Vb Techniek (60C - 65C)

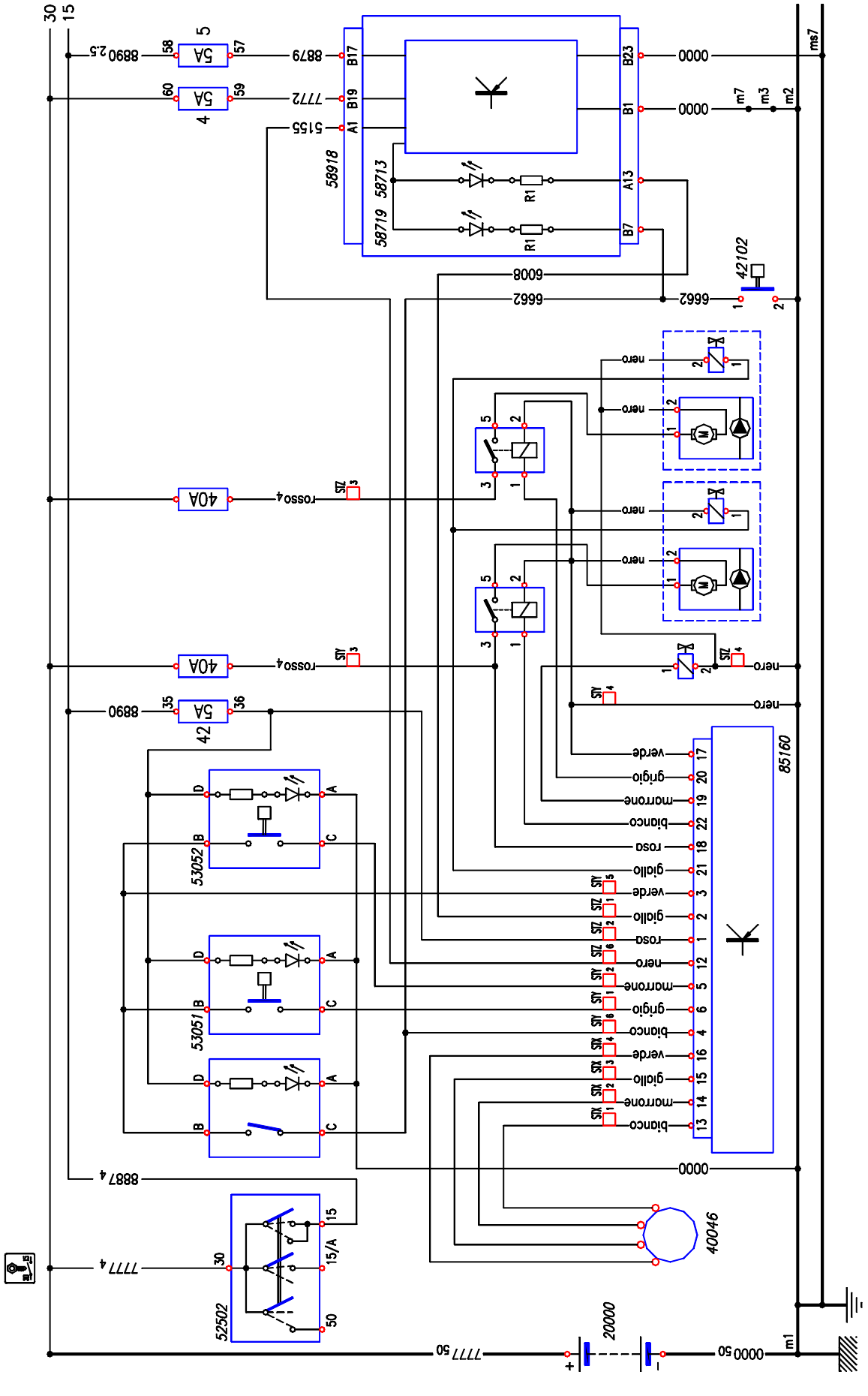

Chart 35A: Automatic conditioner (.9) / OPT 6650

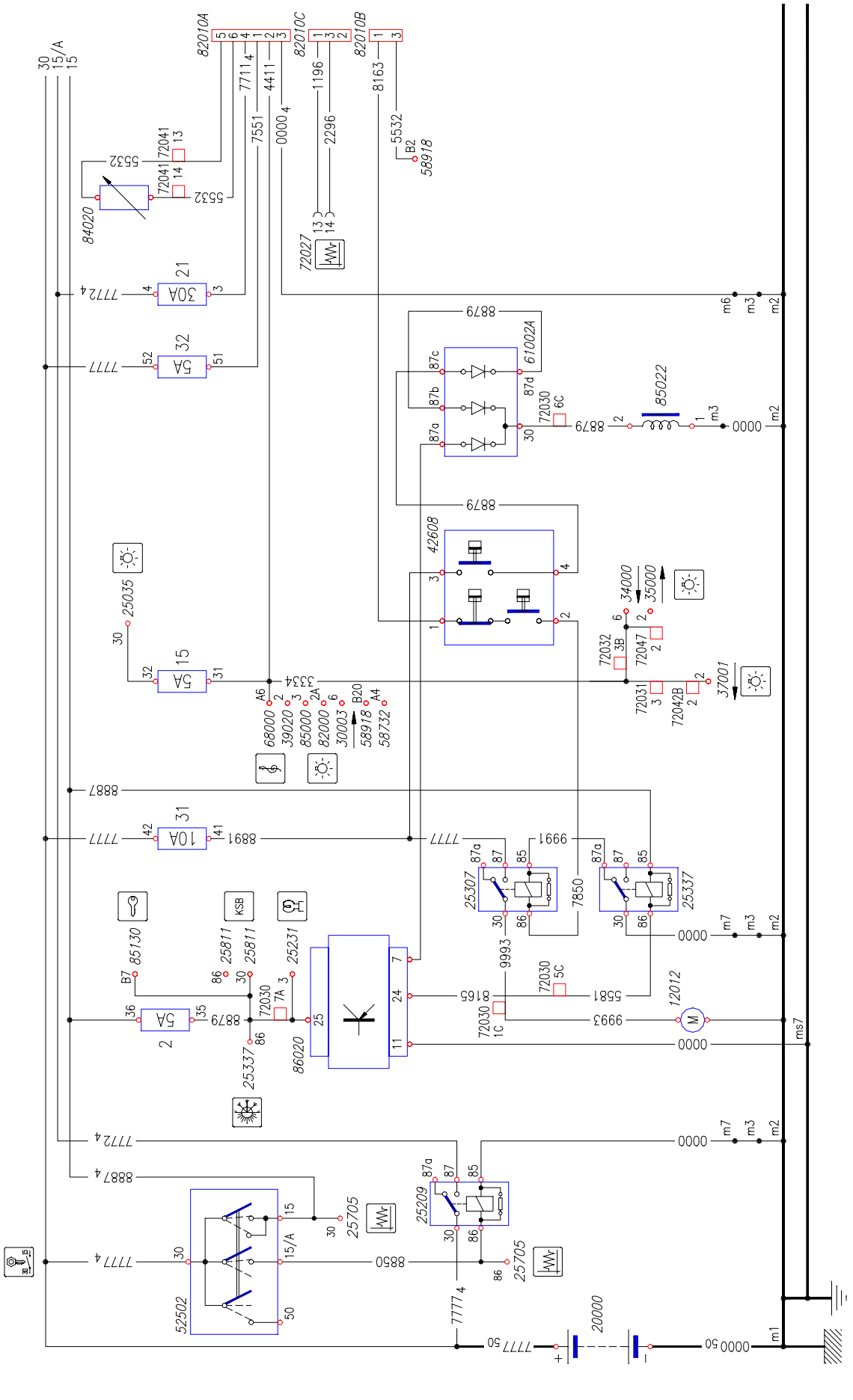

Chart 35B: Automatic conditioner (.11) / OPT 6650

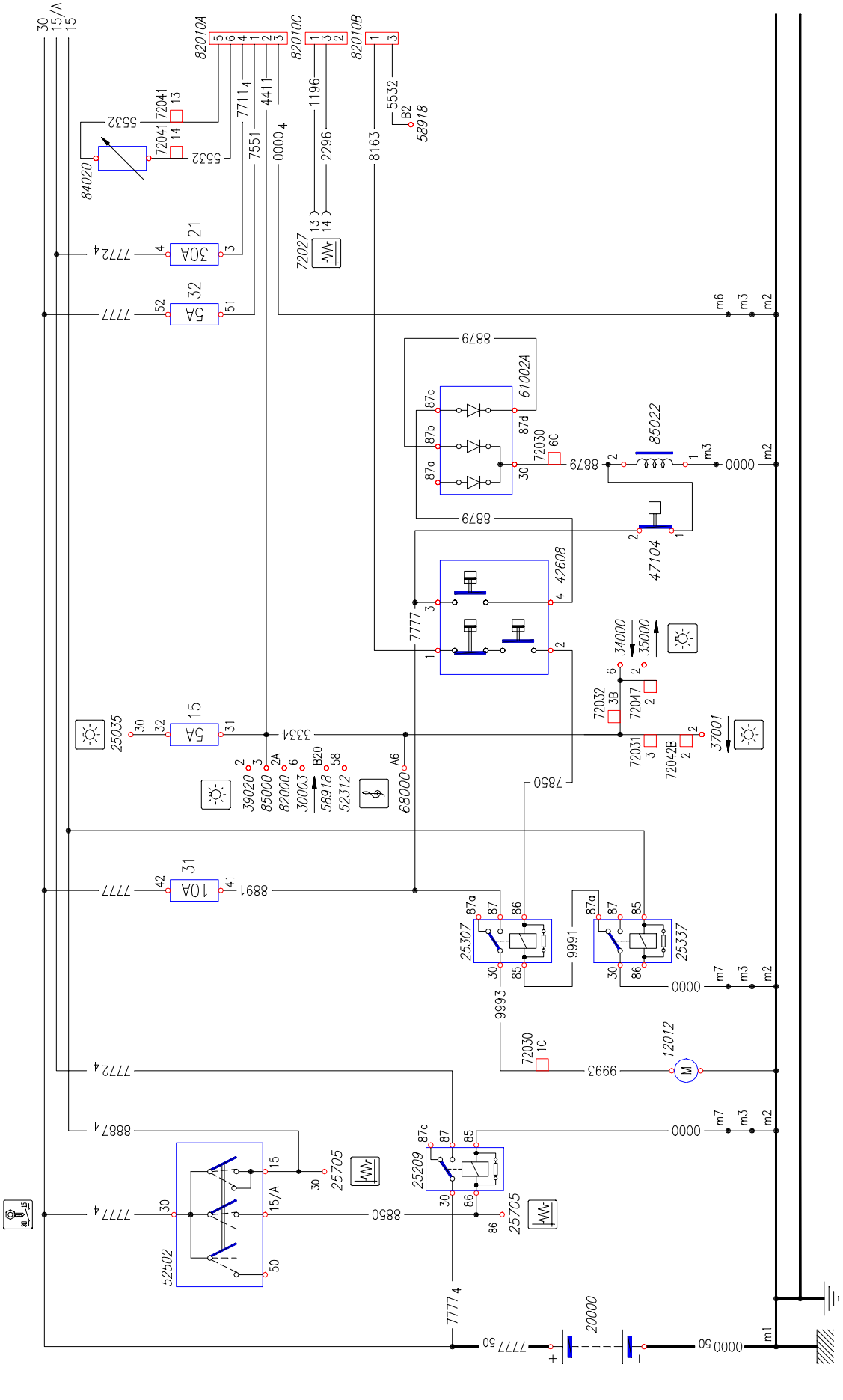

Chart 35C: Automatic conditioner (.13 - .15) / OPT 6650

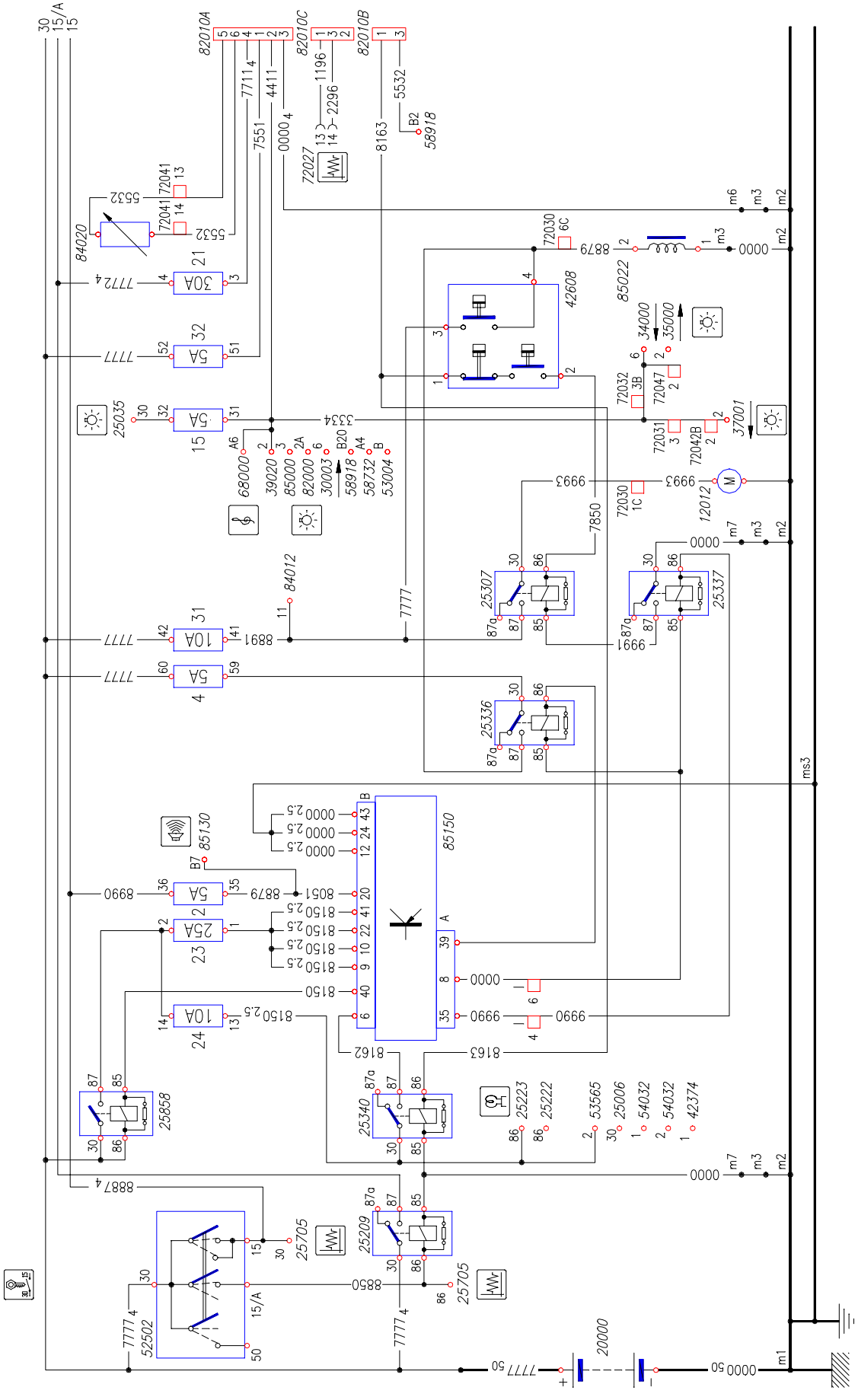

Chart 35D: Automatic conditioner (.9 - .10 - .11 - .12 - .13 - .15) / OPT 6650

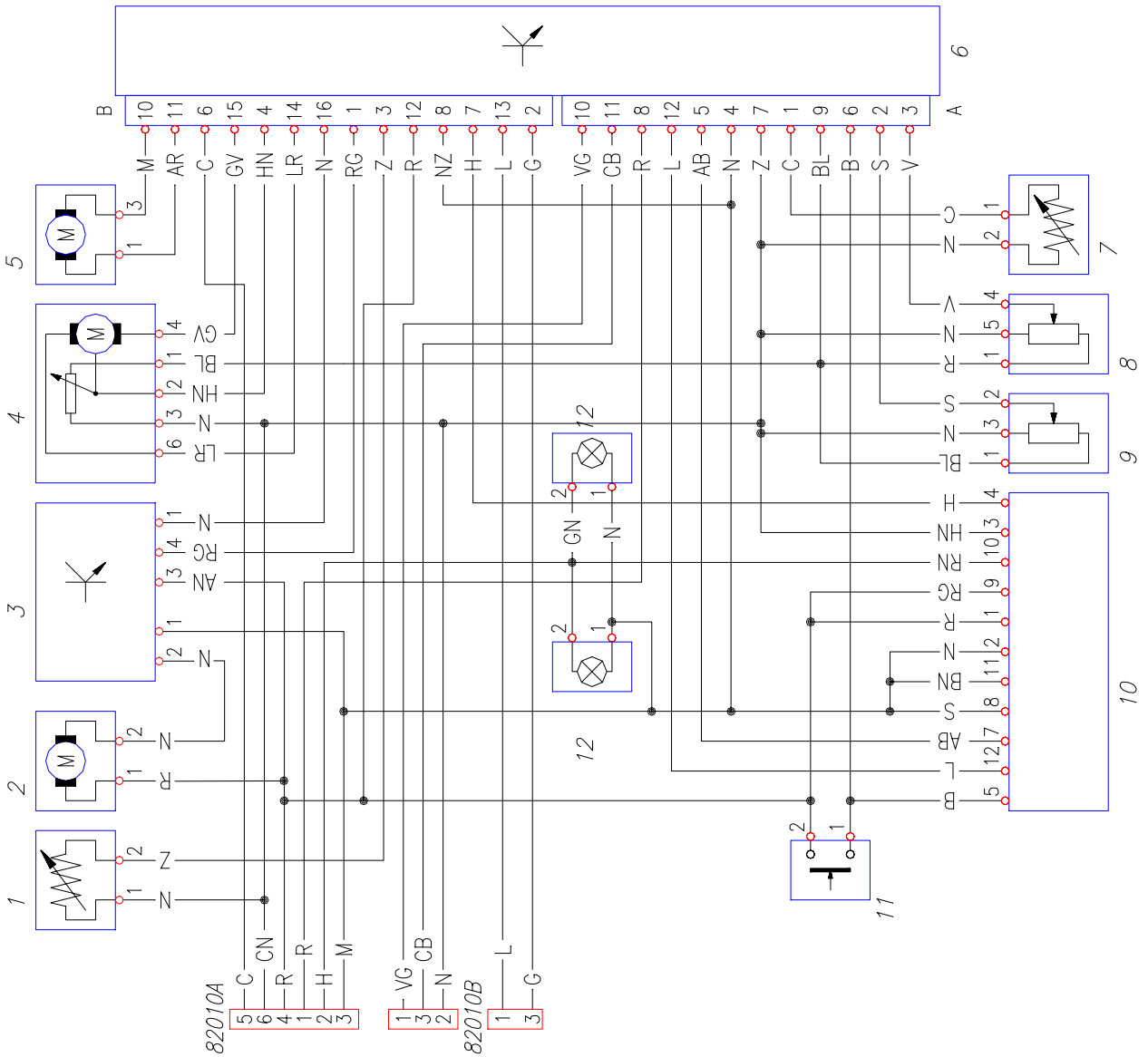

49887

Chart 35E: Automatic conditioner (.10 - .12) / OPT 6650

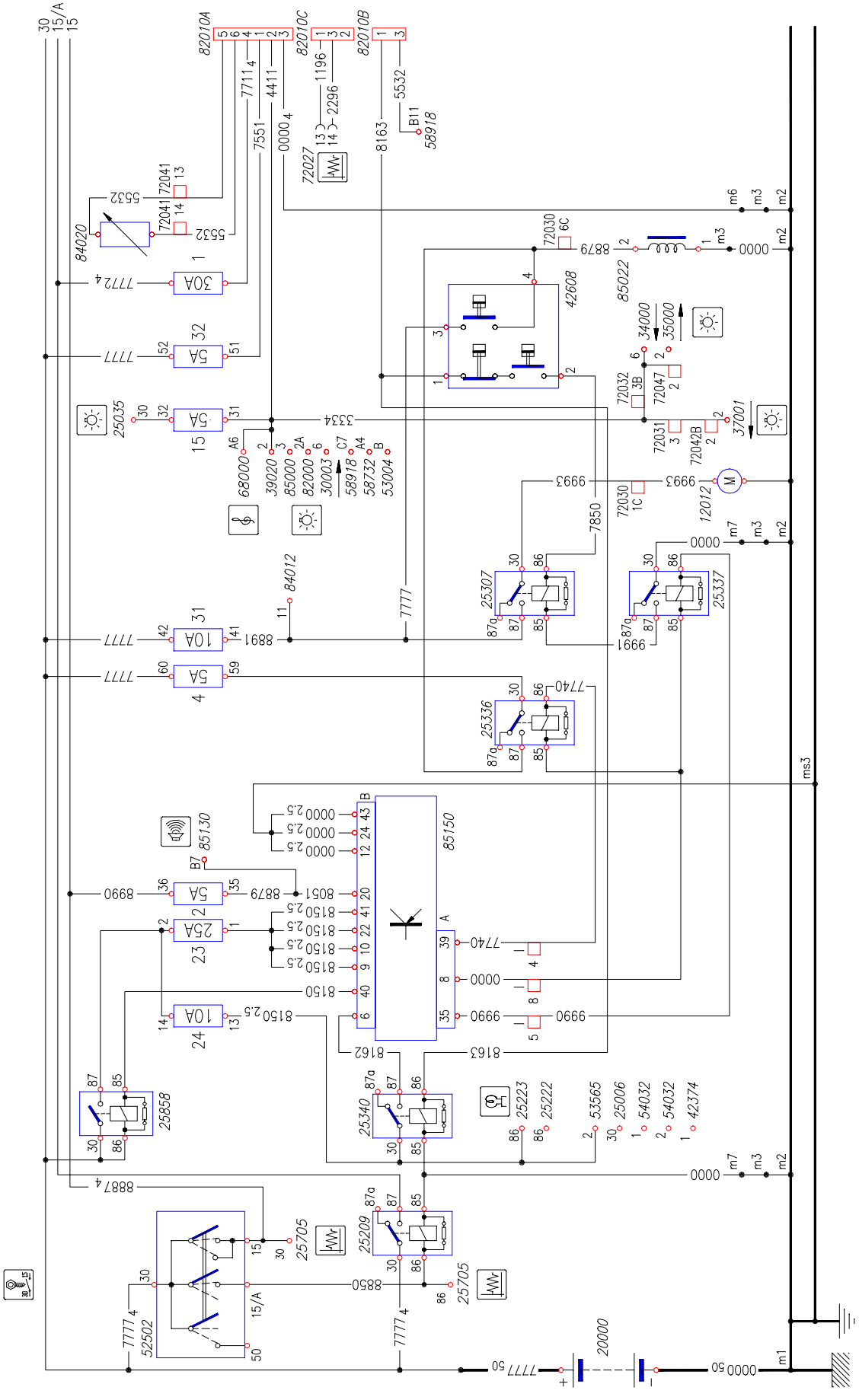

Chart 35F: Automatic air conditioning (.10 - .12 - EDC16)

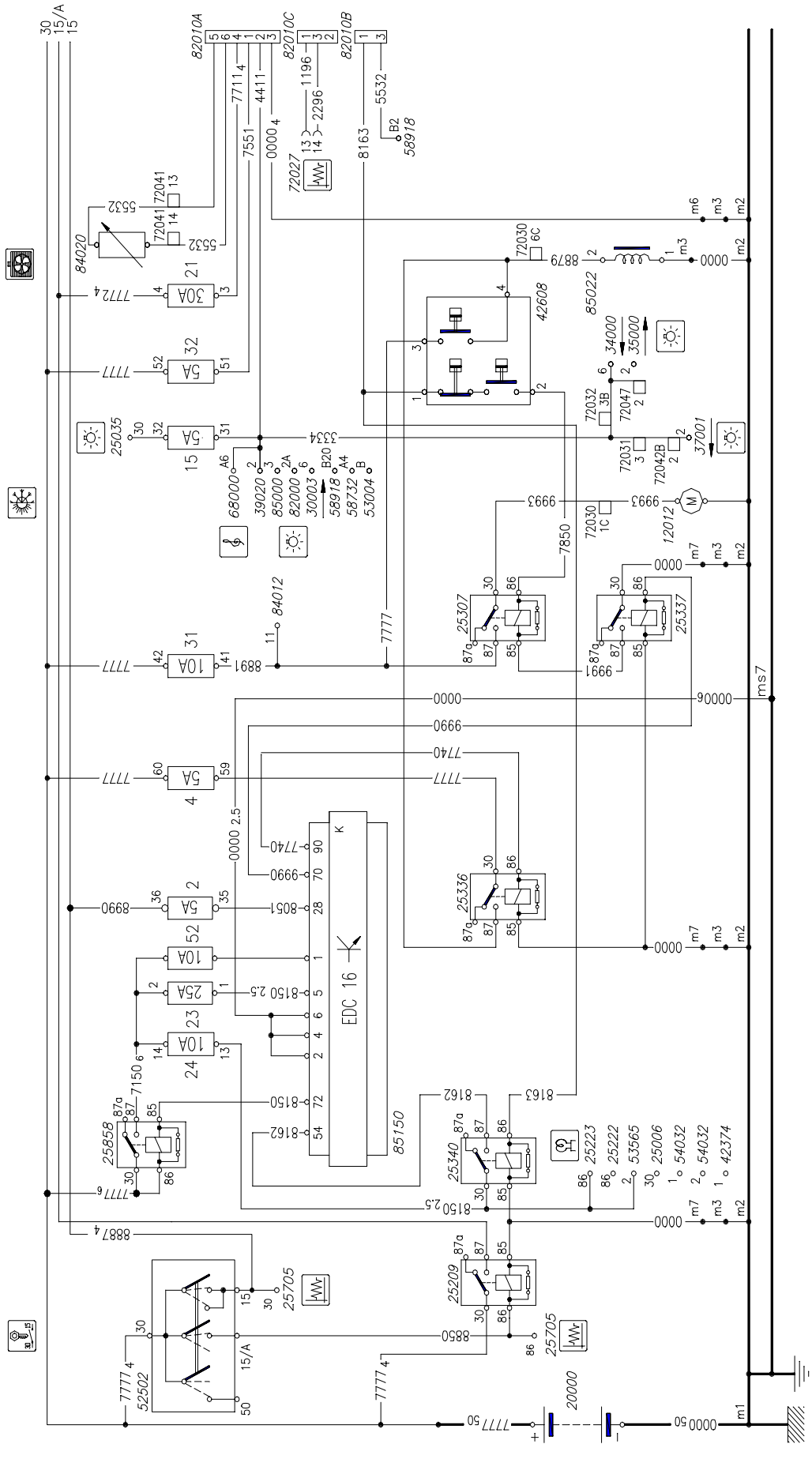

Chart 36: Electronic tachograph / OPT 5130 - 5131

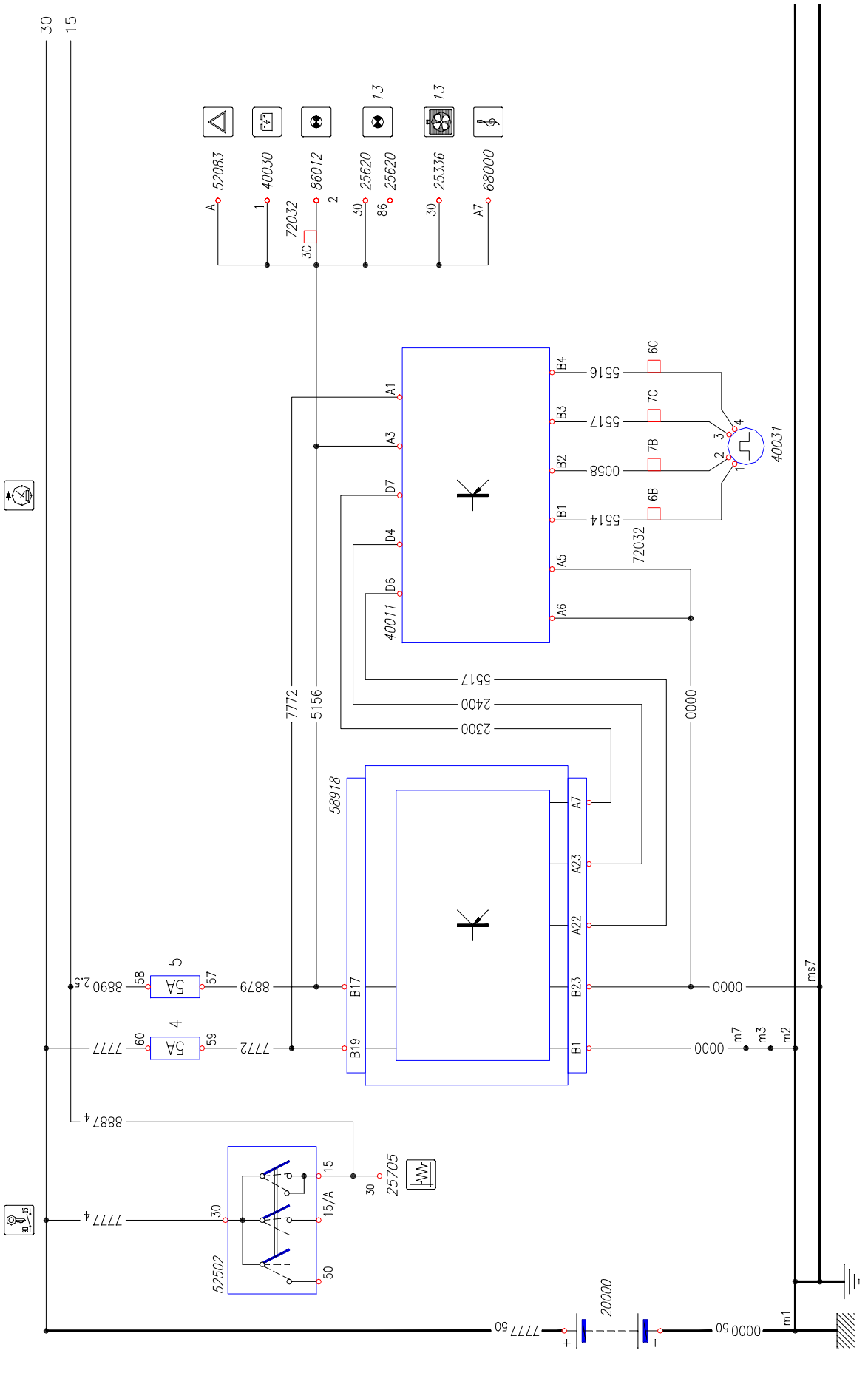

Chart 37A: Air bag and pre-tensioners / OPT 4495 - 4496

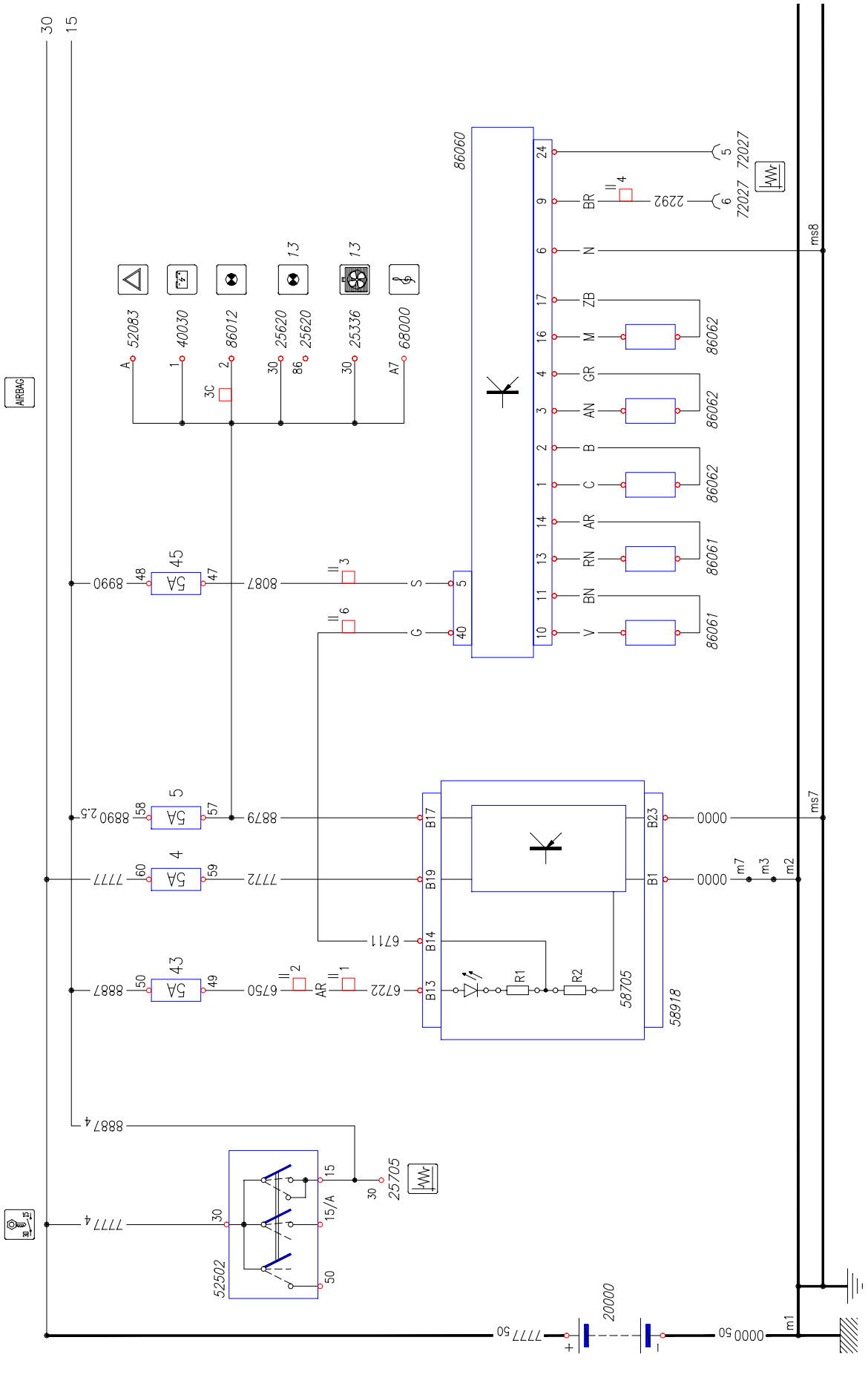

Chart 37B: Air bag and pretensioners / OPT

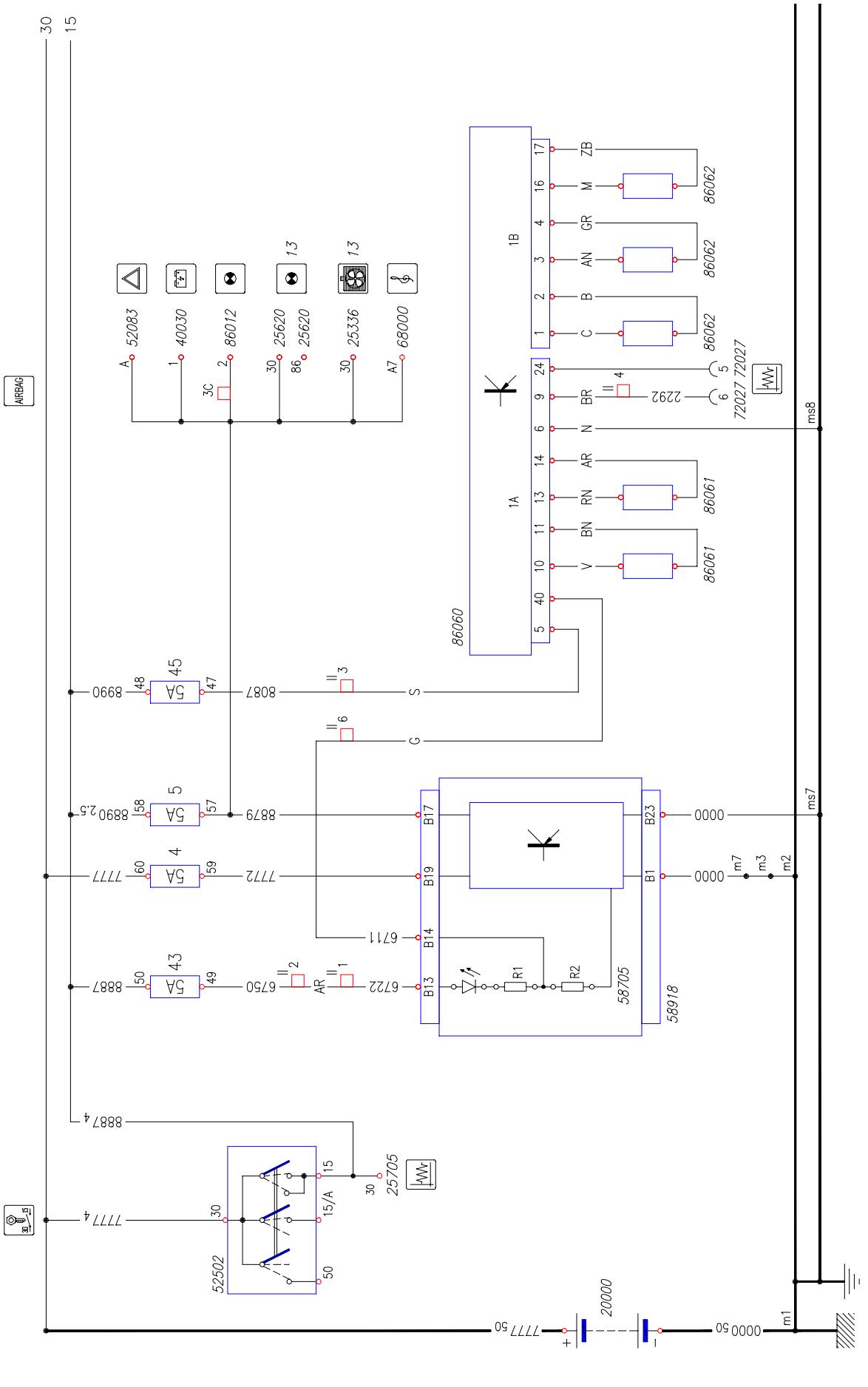

Chart 38: Door lock with anti-theft / OPT 6890

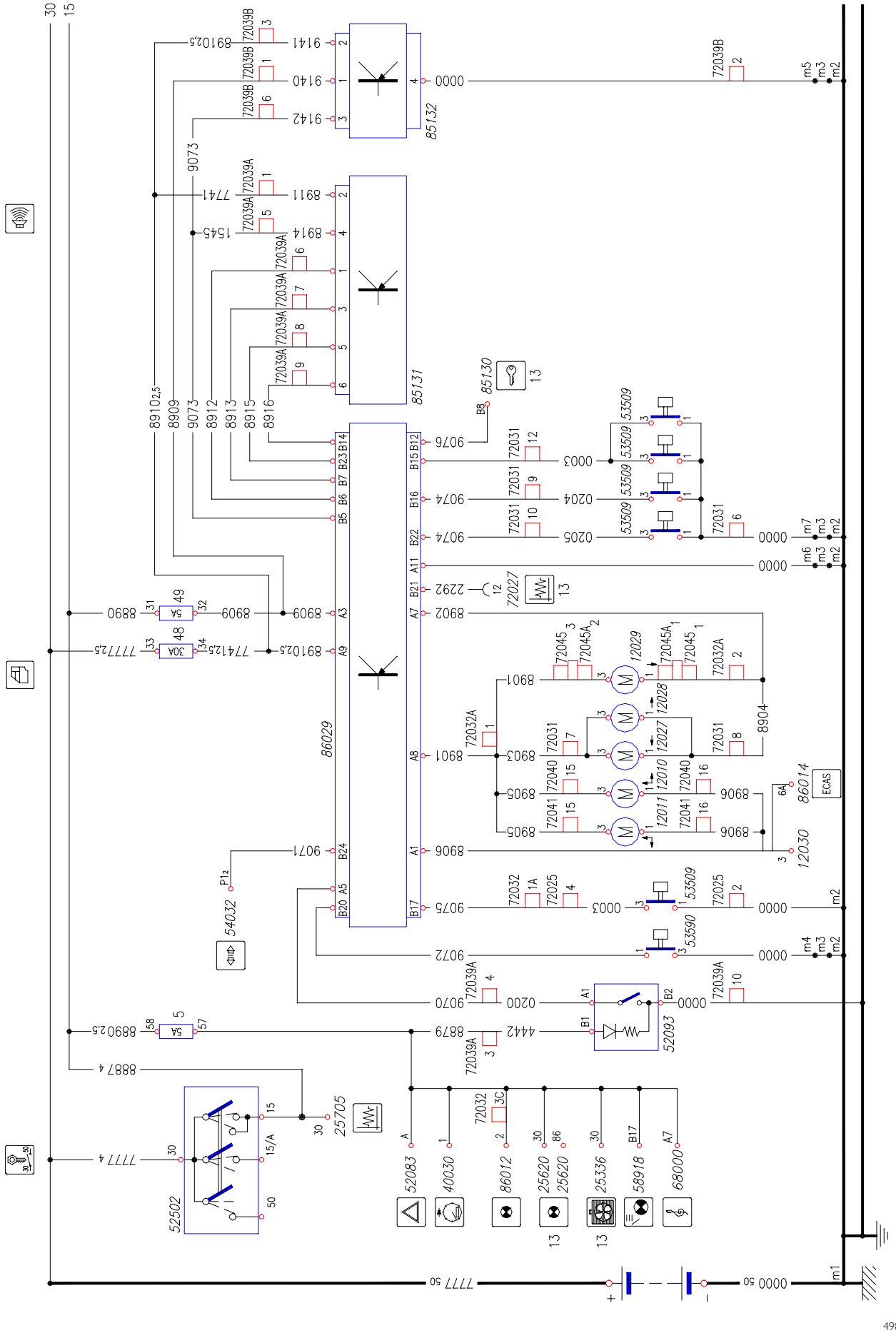

Chart 39A: Front differential lock / OPT 131

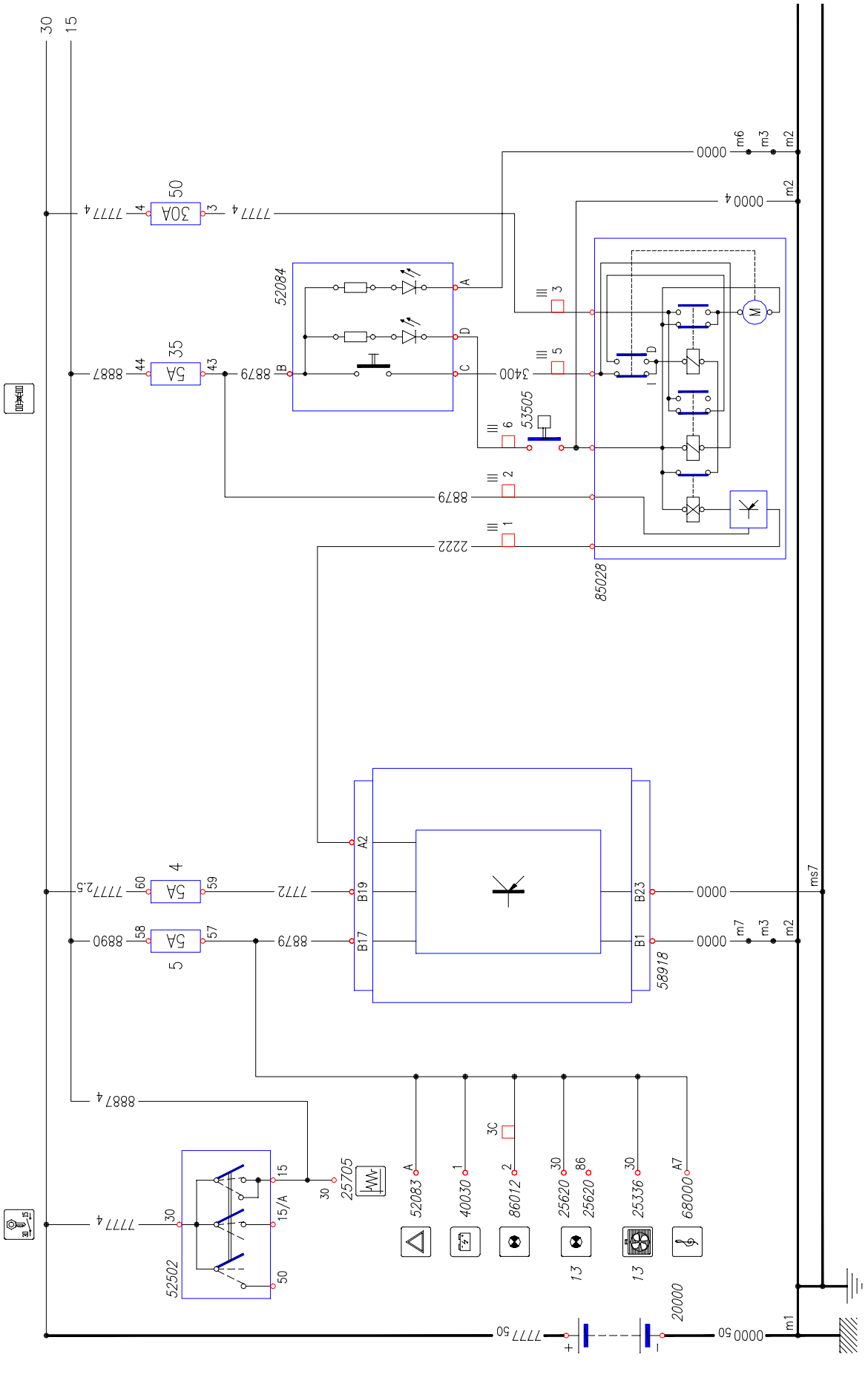

Chart 39B: Rear differential lock / OPT 131

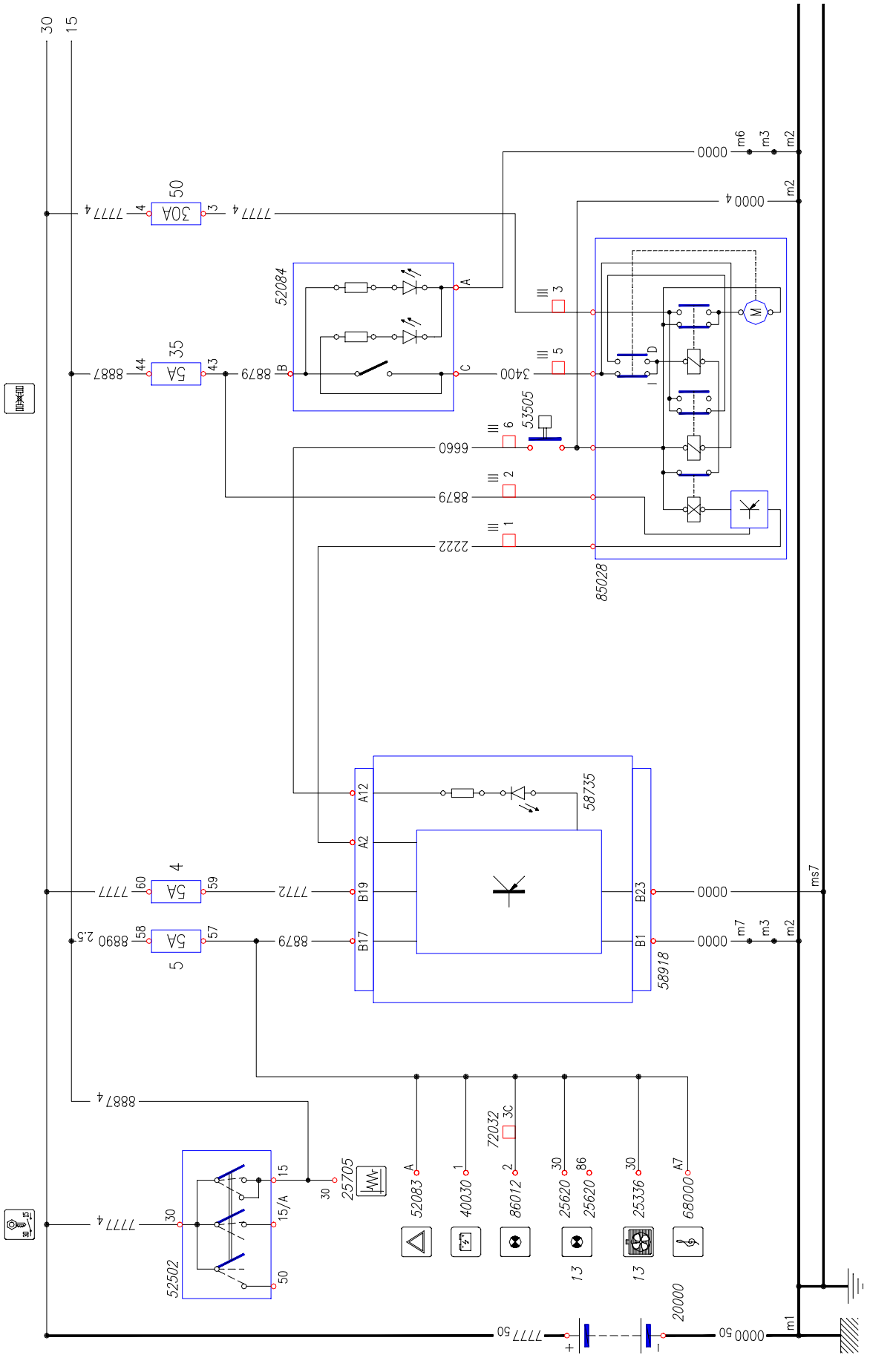

Chart 40: 13-pole power connection / OPT 6520

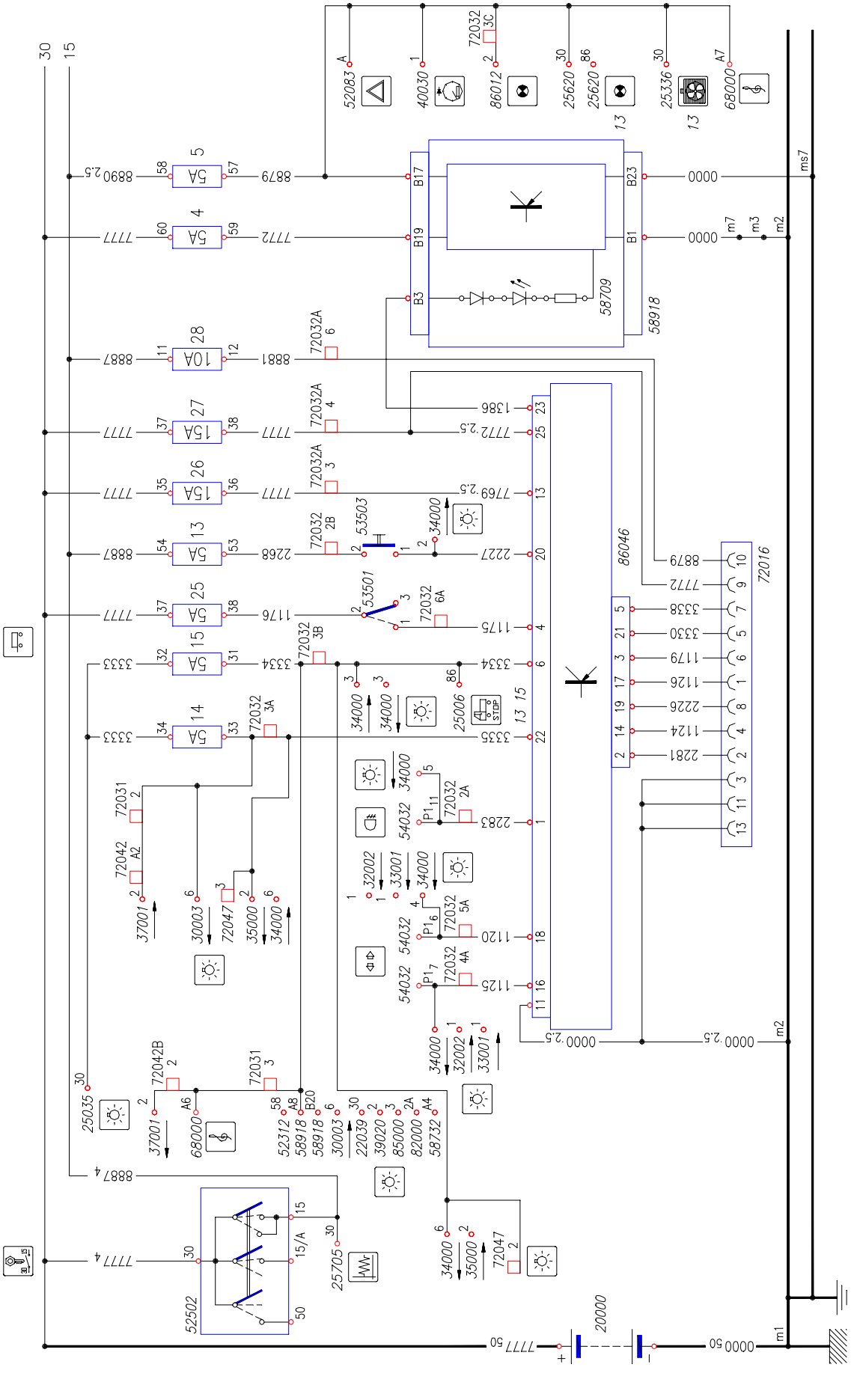

Chart 41A: Total PTO (.9 - .11)

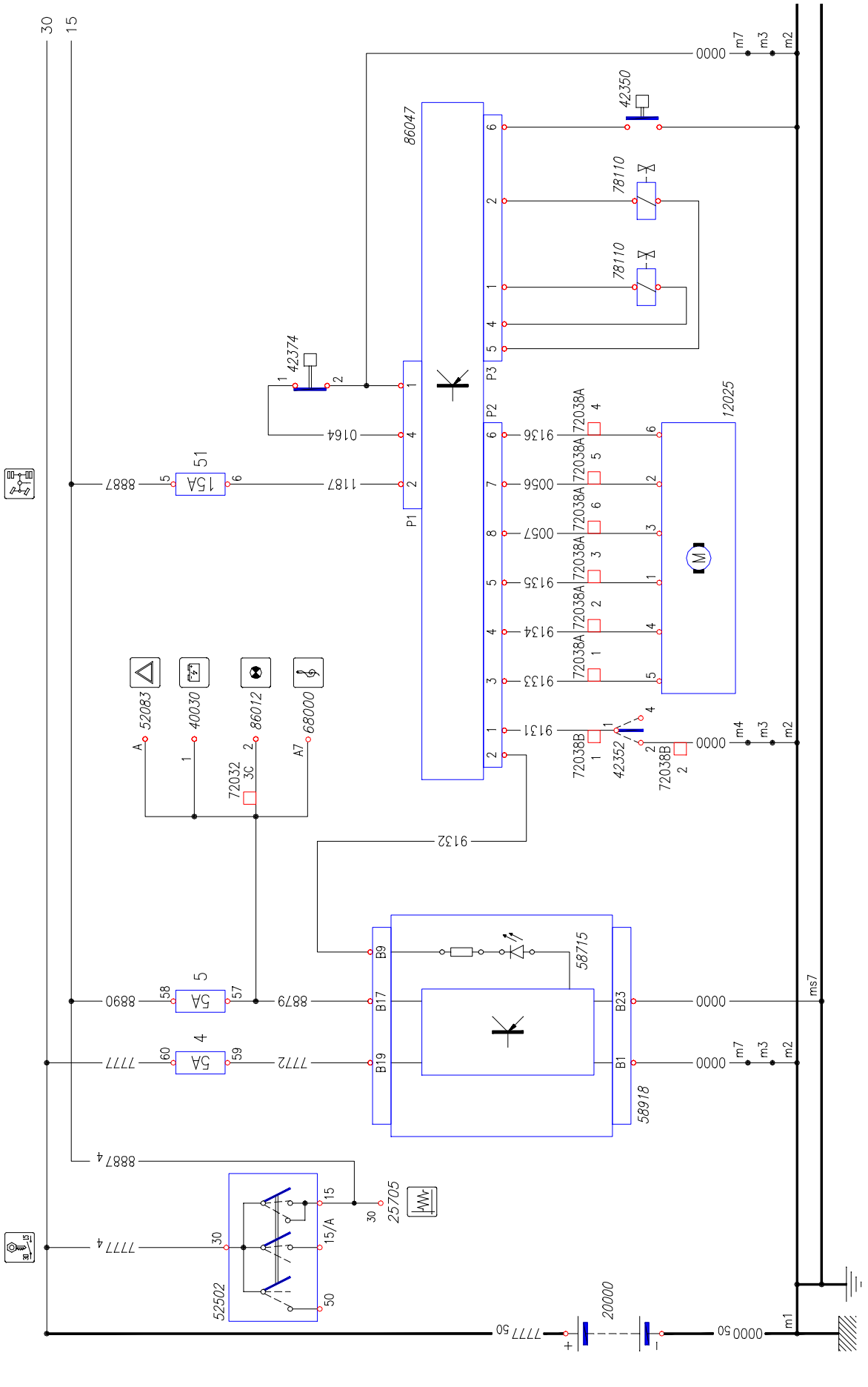

Chart 41B: Total PTO (.10 - .12 - .13 - .15)

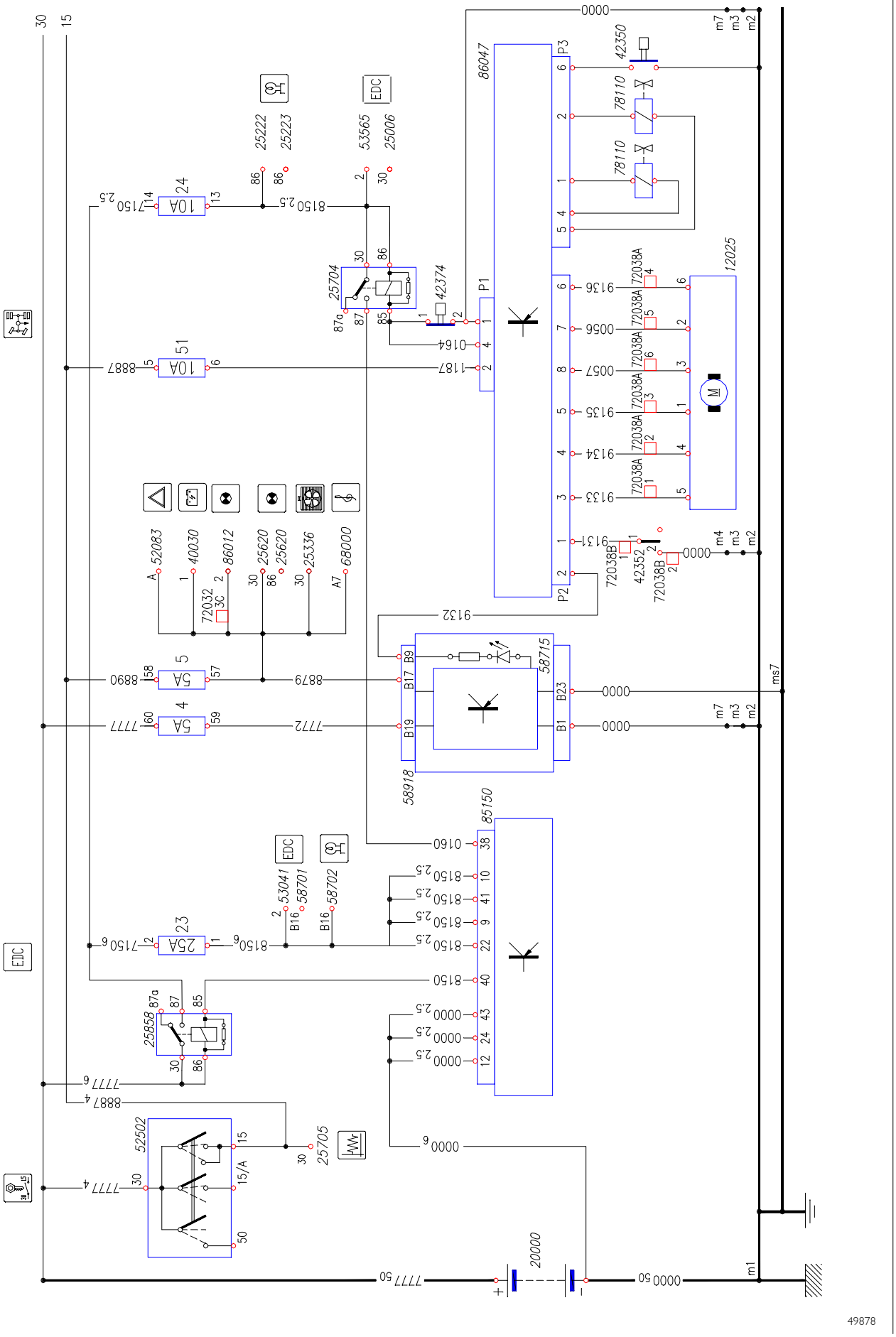

Chart 42A: Heated operator seat bus version / OPT 6628

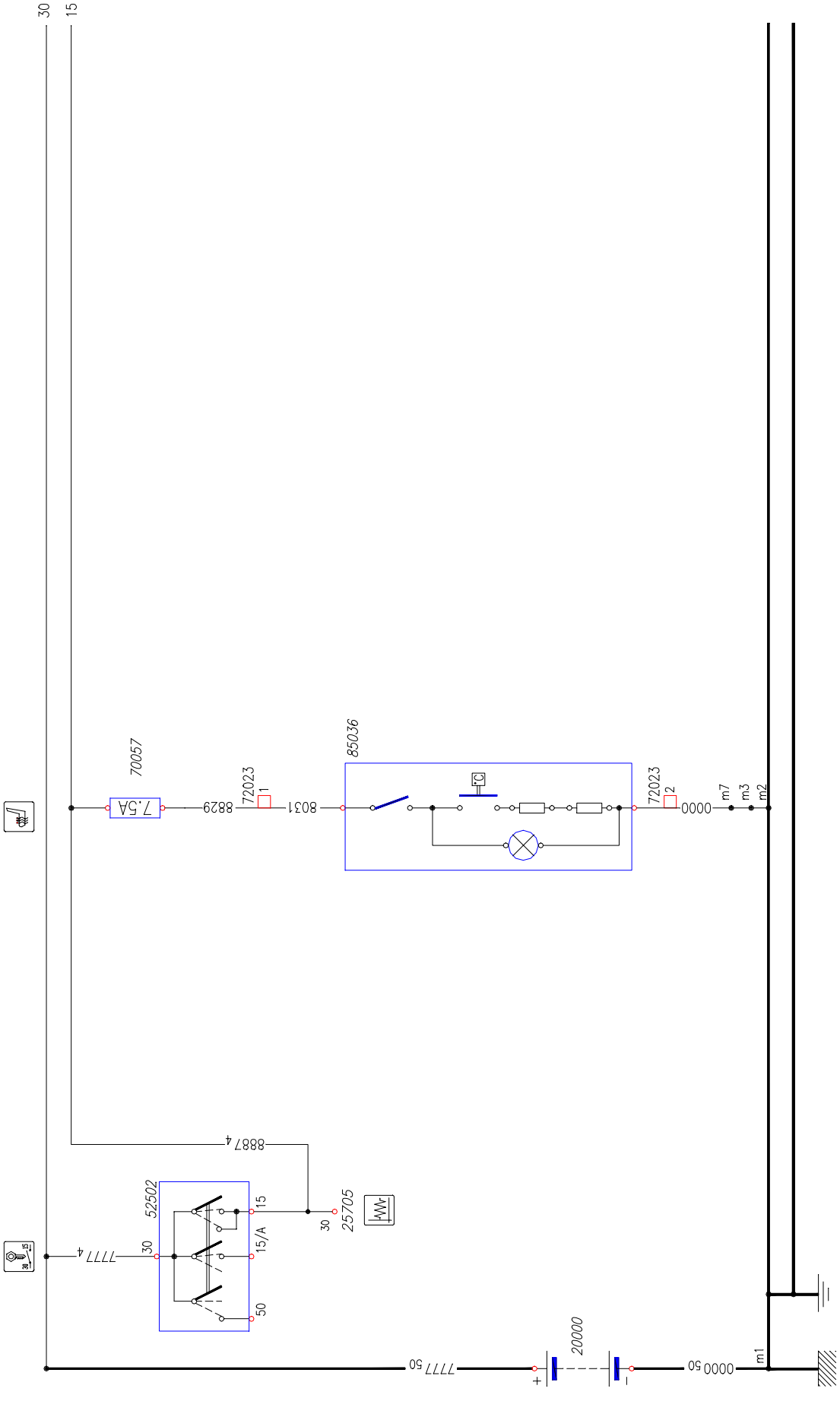

Chart 42B: Heated seats / OPT 6644

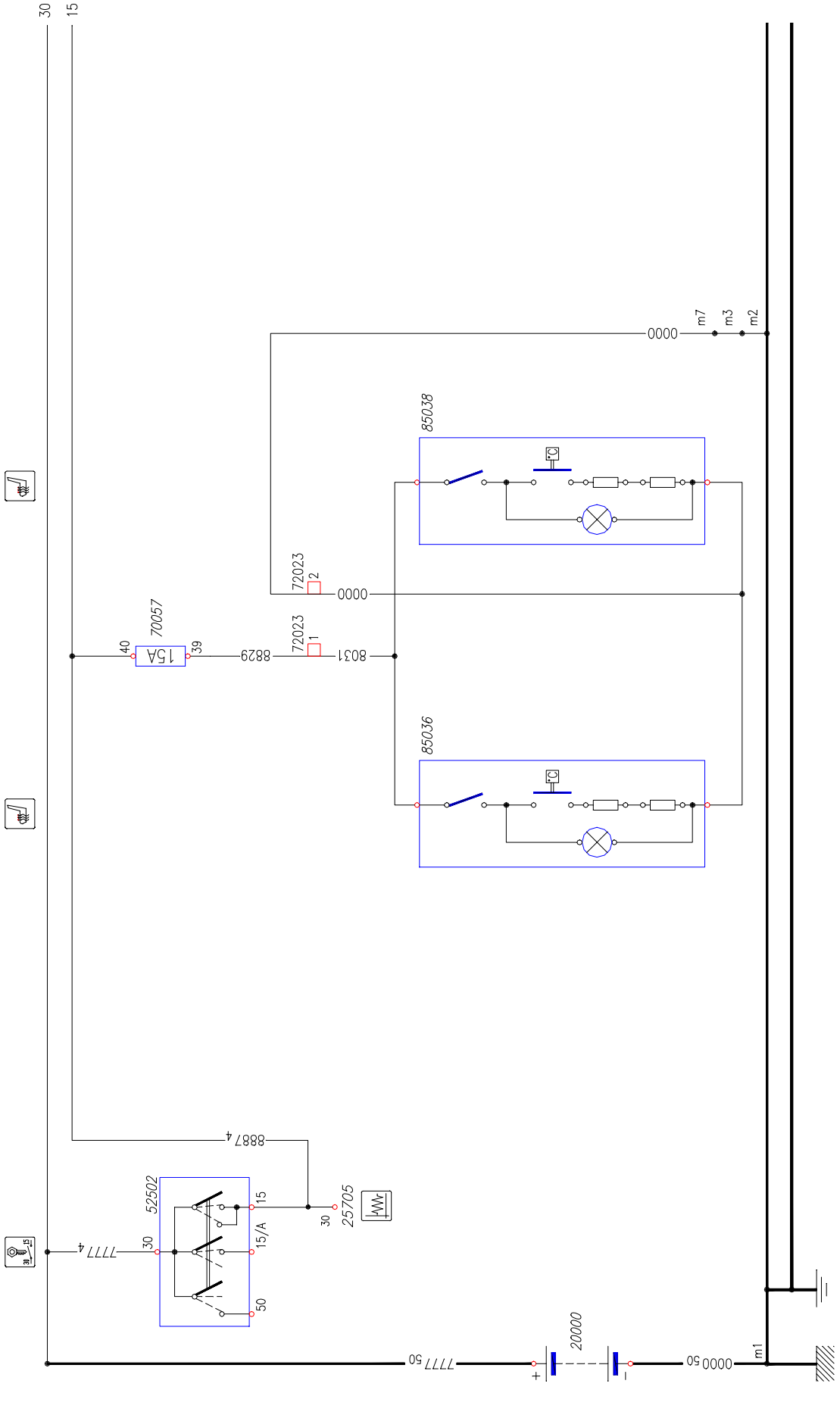

Chart 43: Day lights for Northern Europe vehicles / OPT 2536

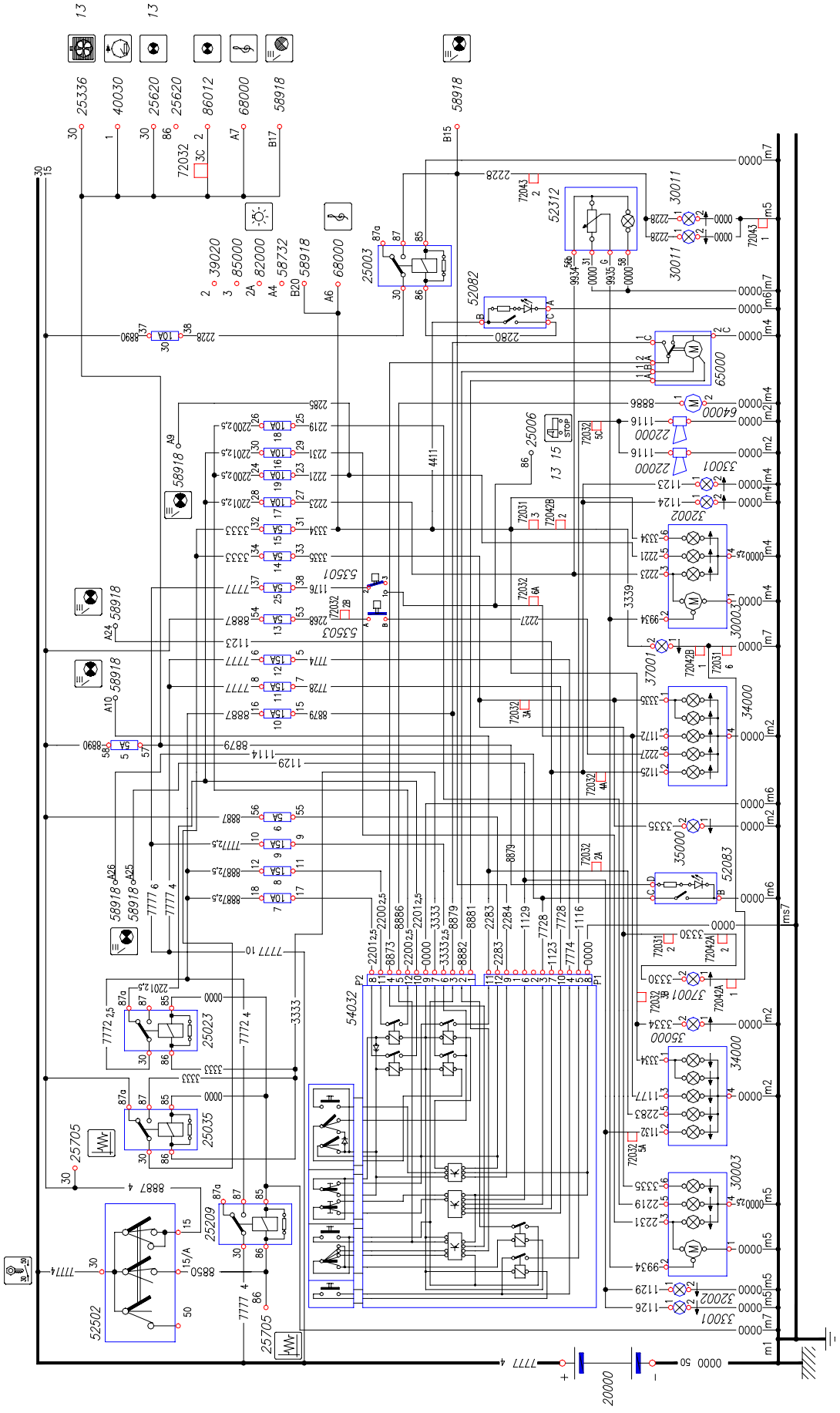

49875

Chart 44: Door lock / OPT 6536

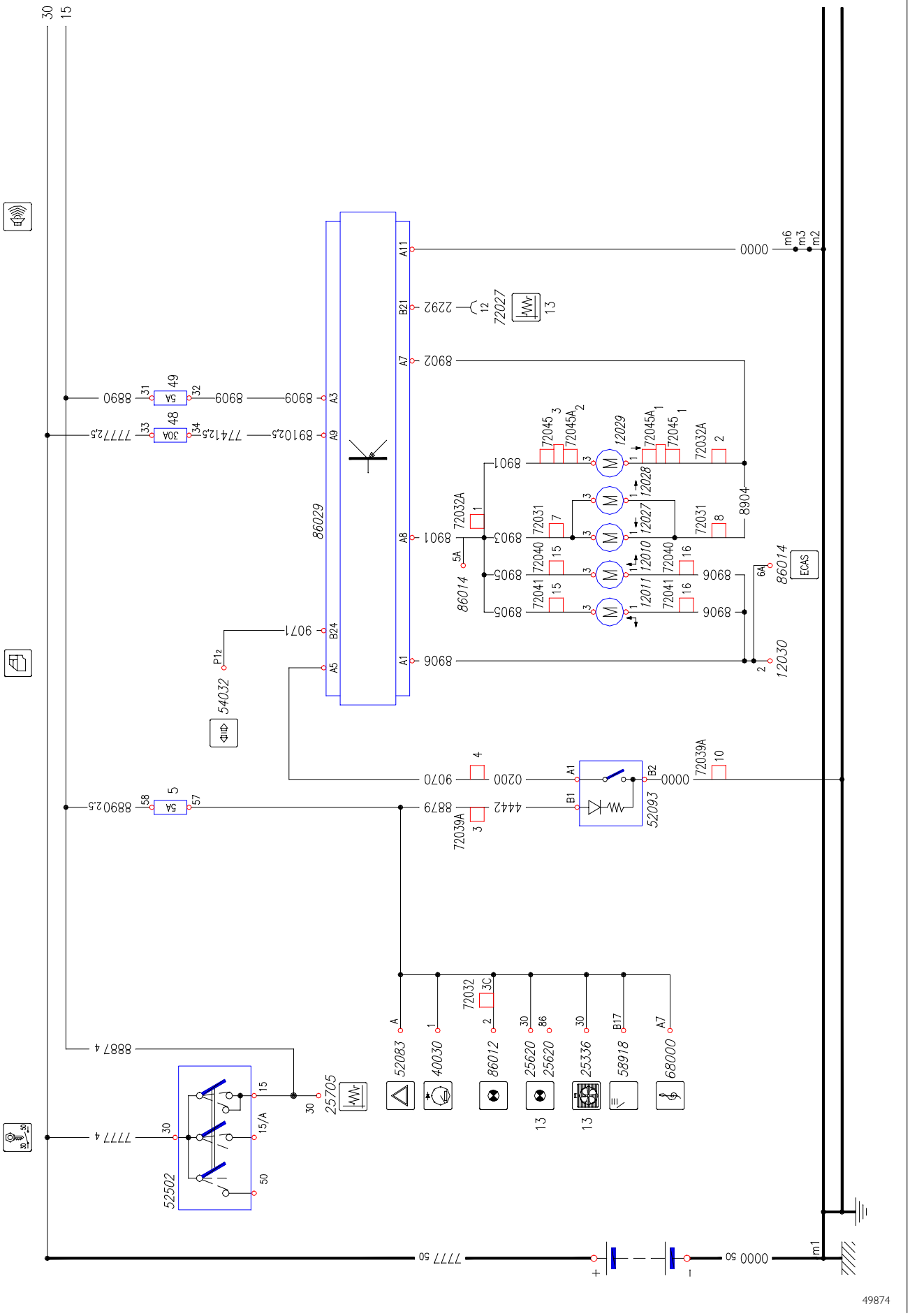

Chart 45A: Telma Scudati retarder (.9 - .11) / OPT 235

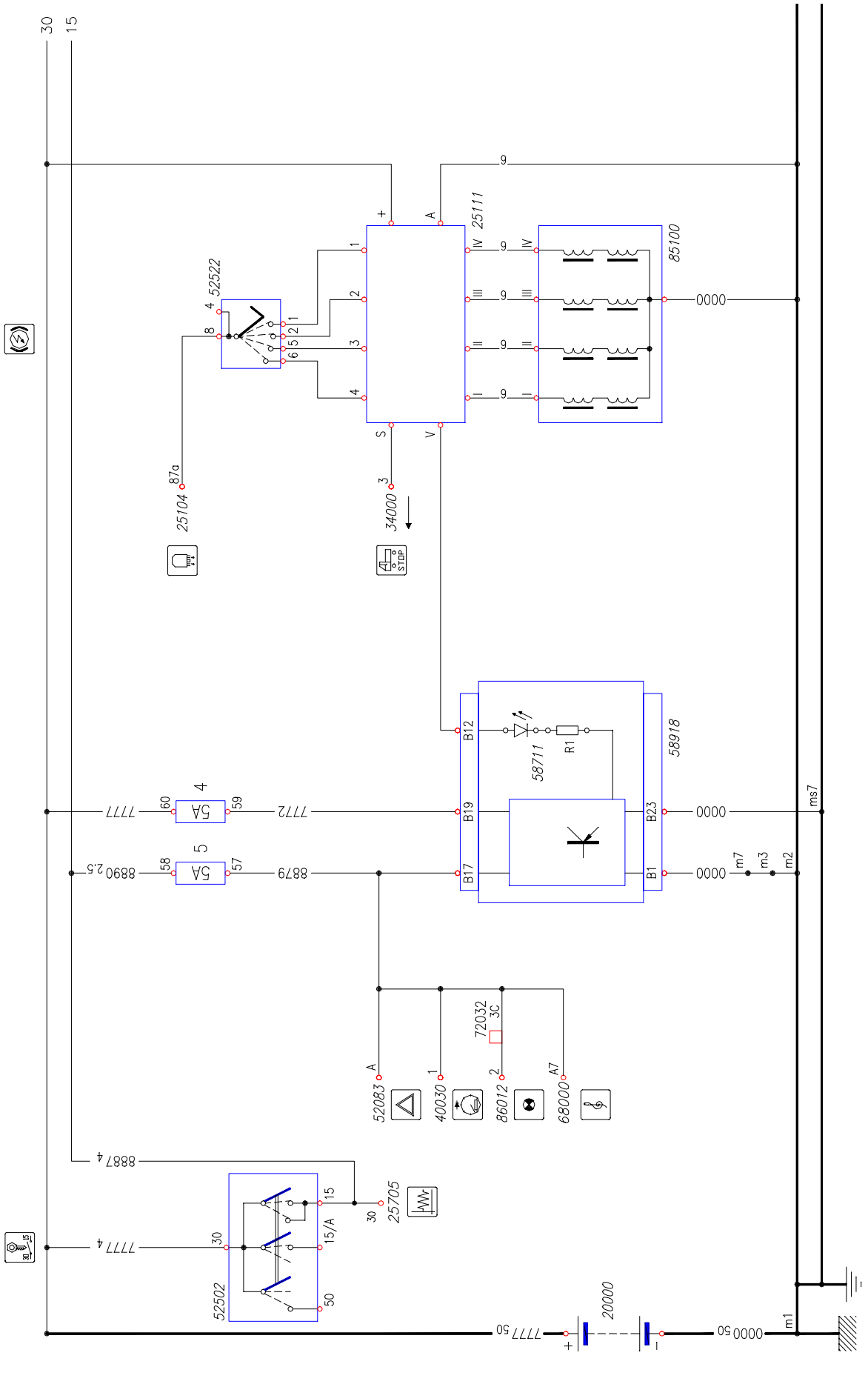

Chart 45B: Telma retarder (.10 - .12 - .13 - .15) / OPT 235

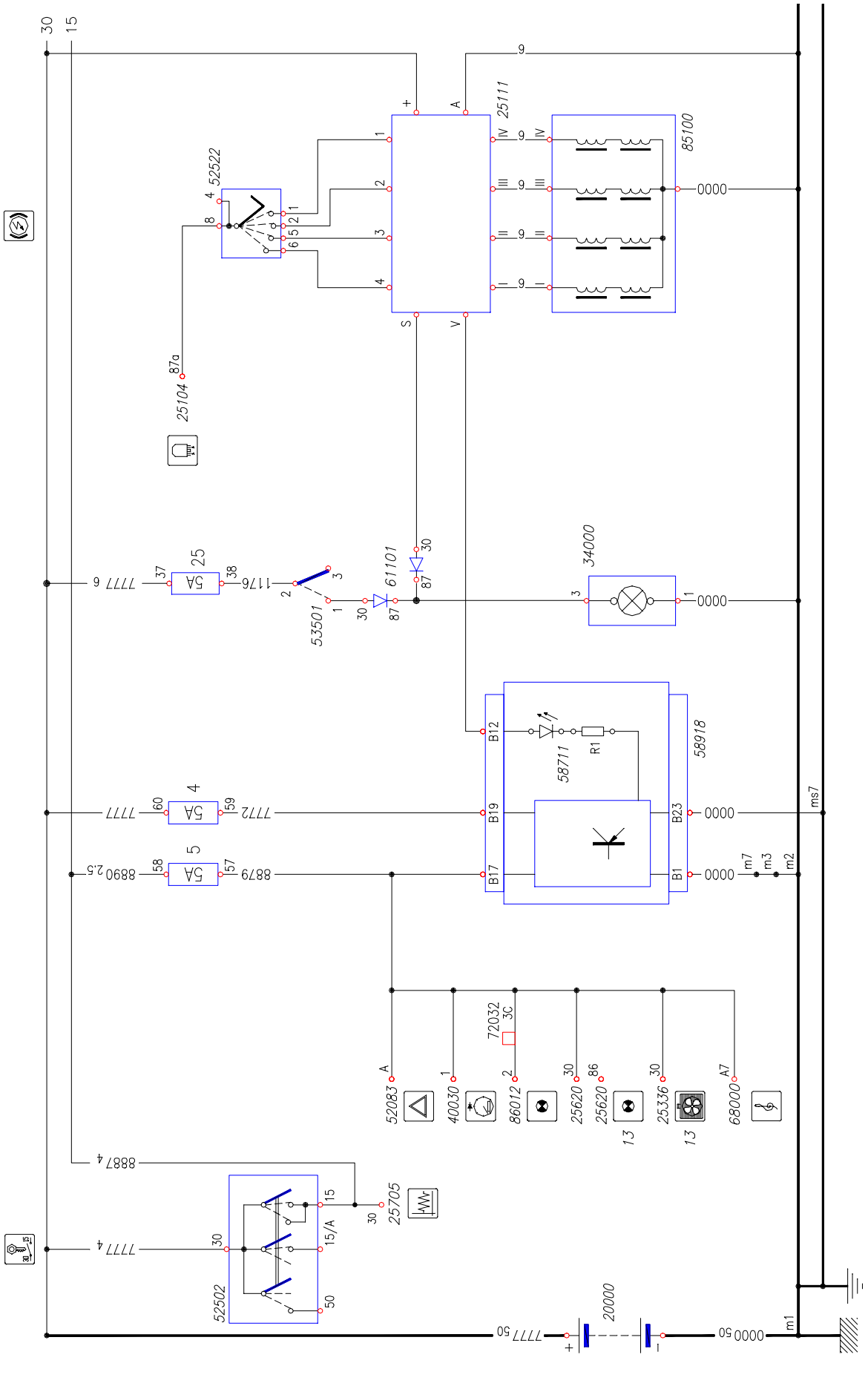

49872

Chart 46: Electrical battery sectioner / OPT 2532

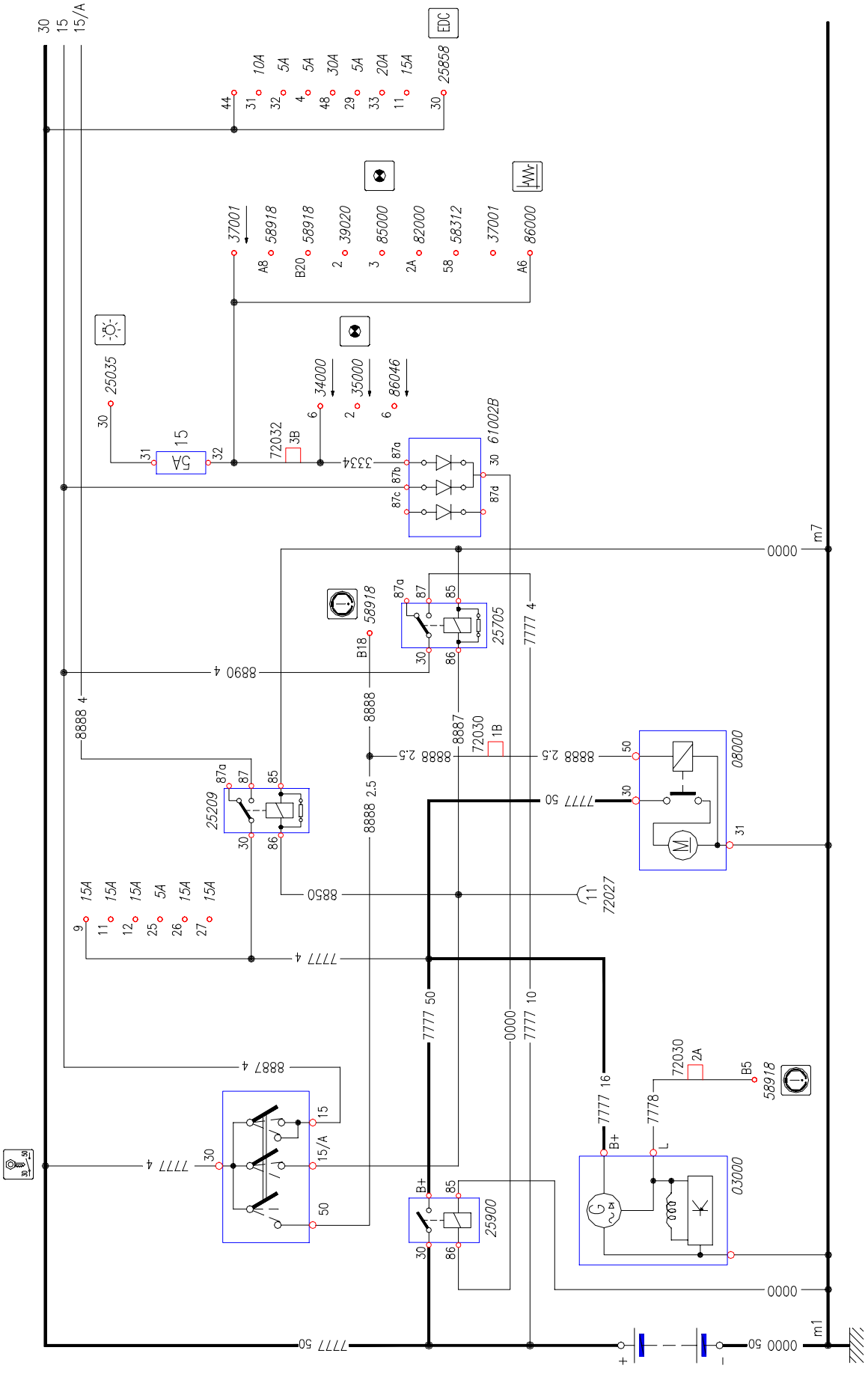

Chart 47: Scudati Cruise Control / OPT 2463

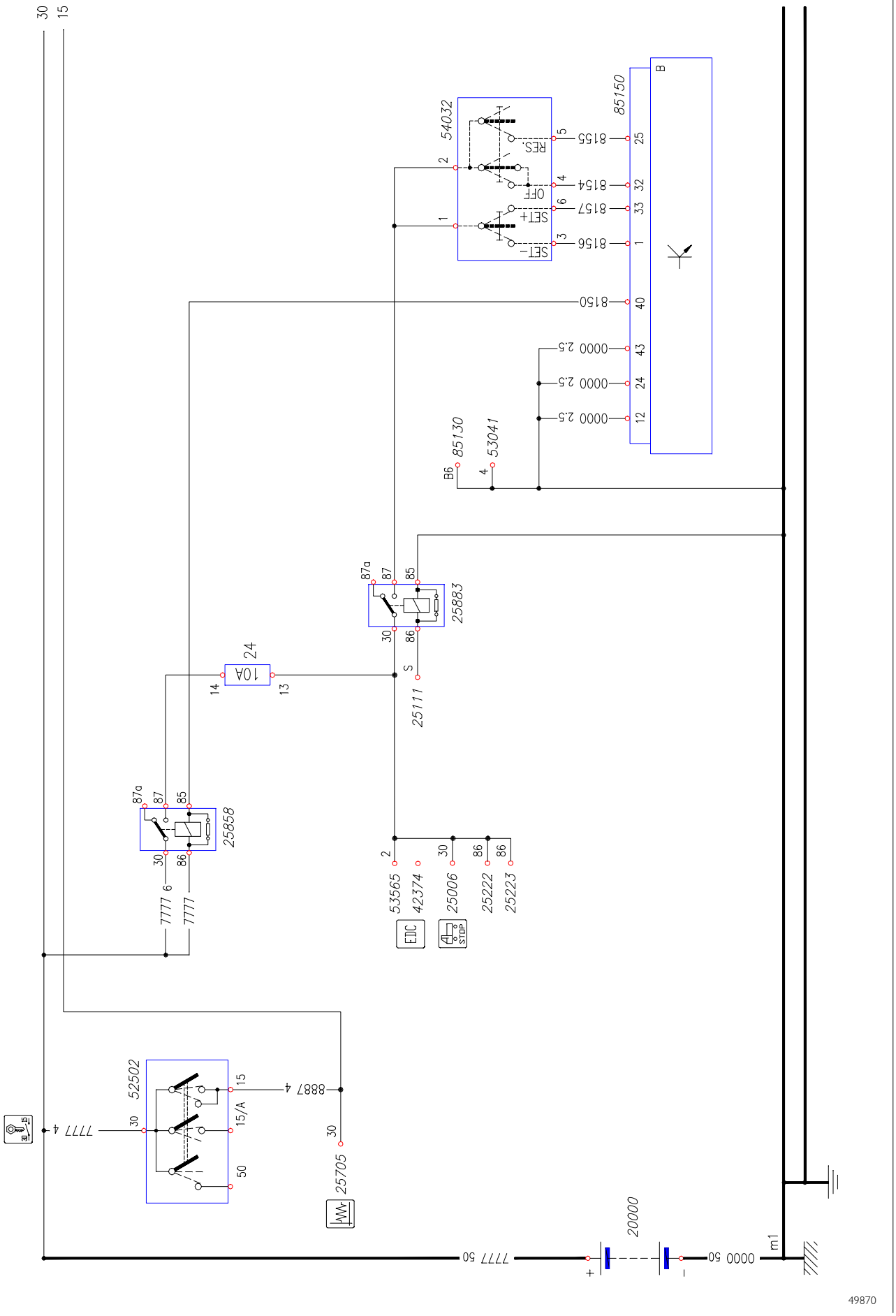

Chart 48: Engine water heater / OPT 6654

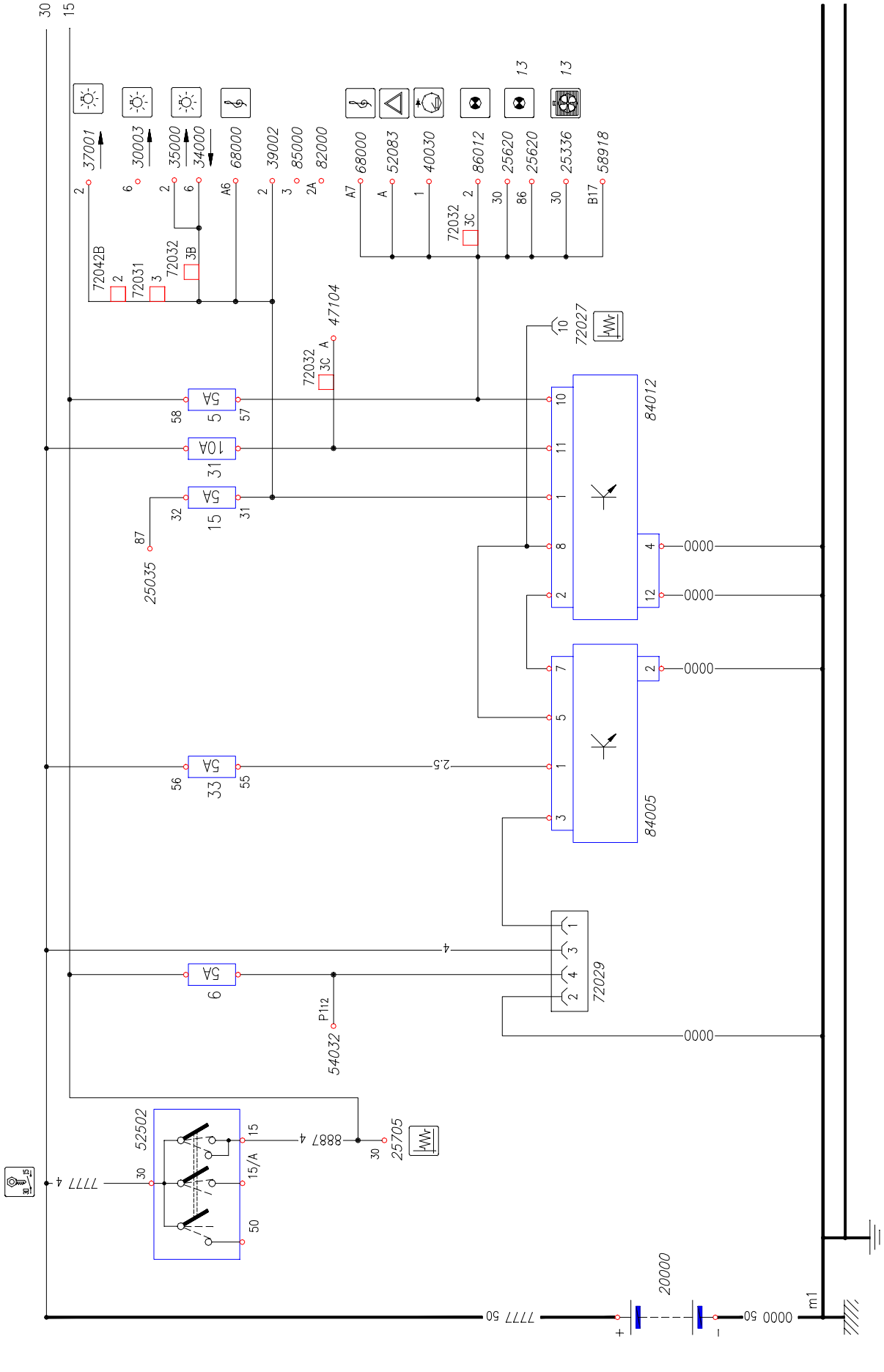

Chart 49: Electrical control sliding side door / OPT 9/12

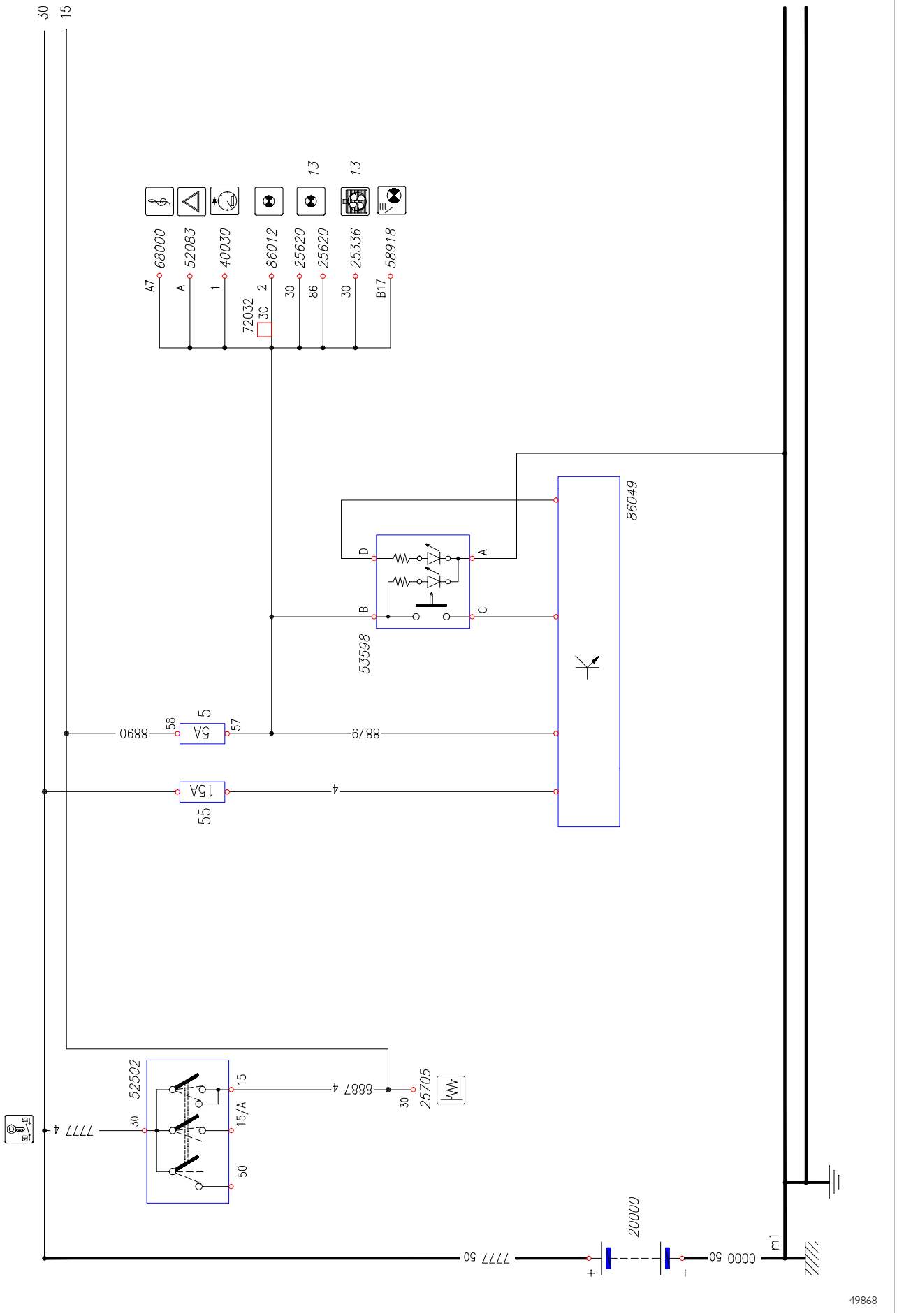

Chart 50: Rotating sliding door / OPT 9/12

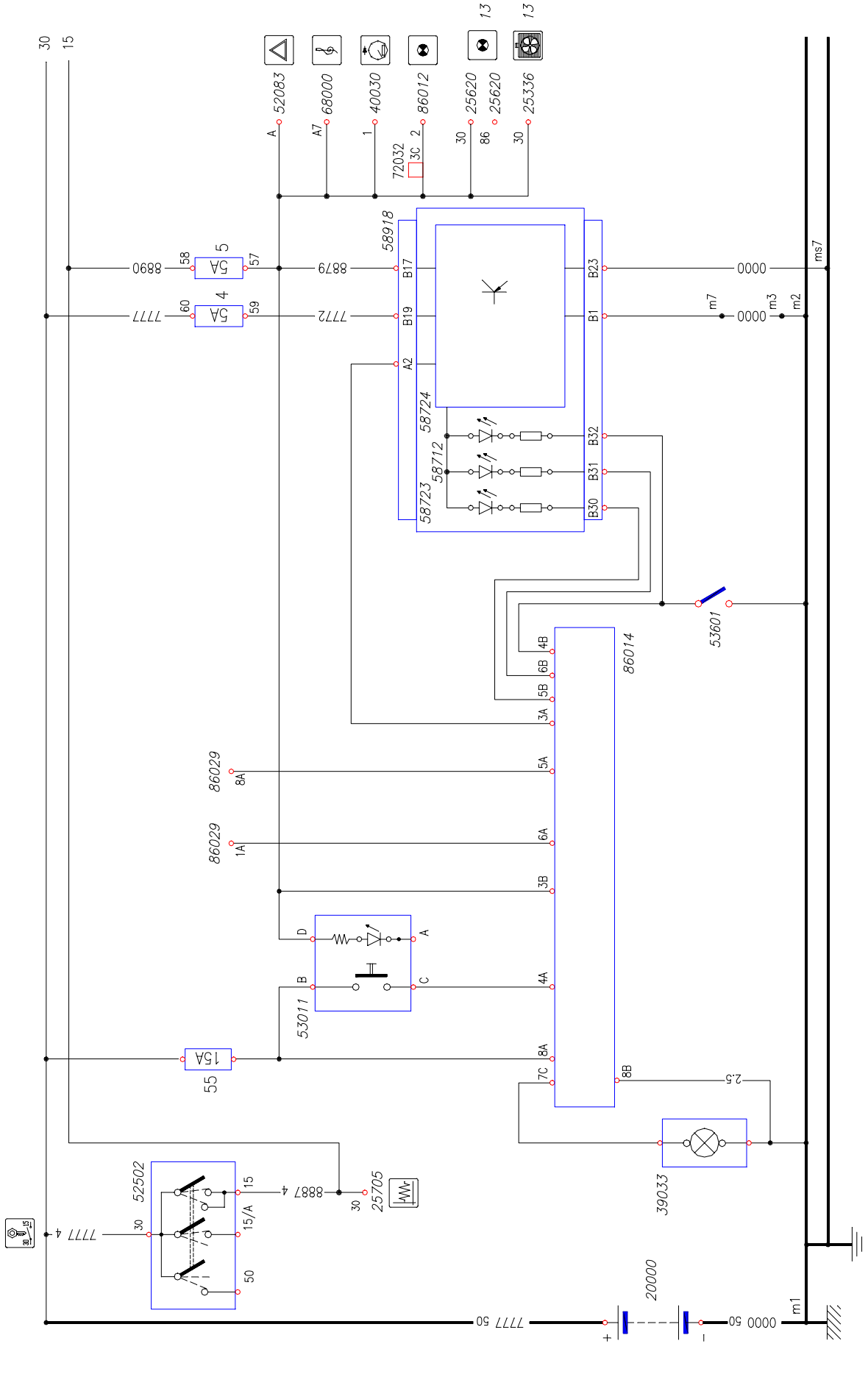

Chart 51: Electrical pit on pavilion / OPT 640

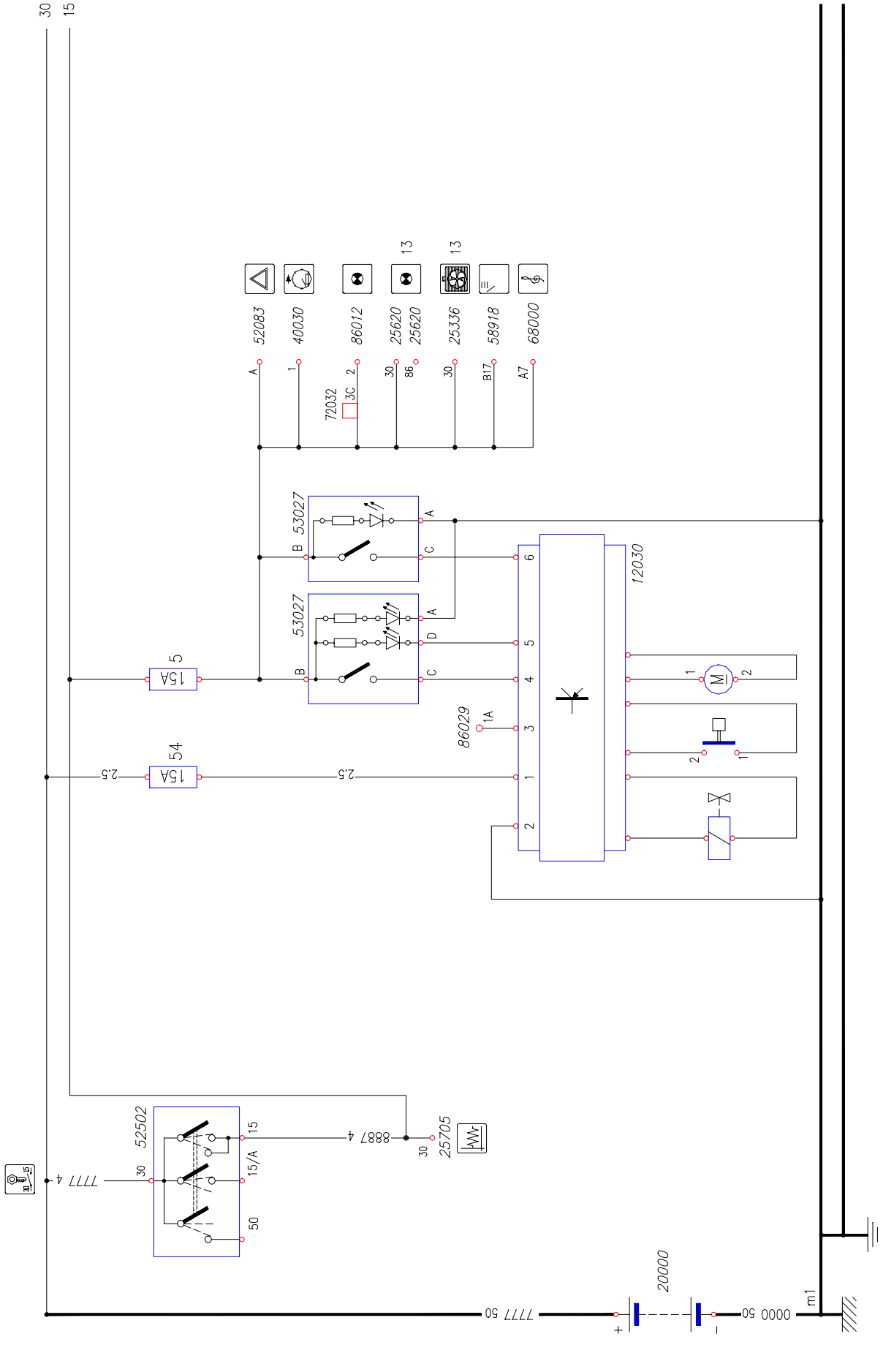

Chart 52: Scudati central emergency control / OPT 2546

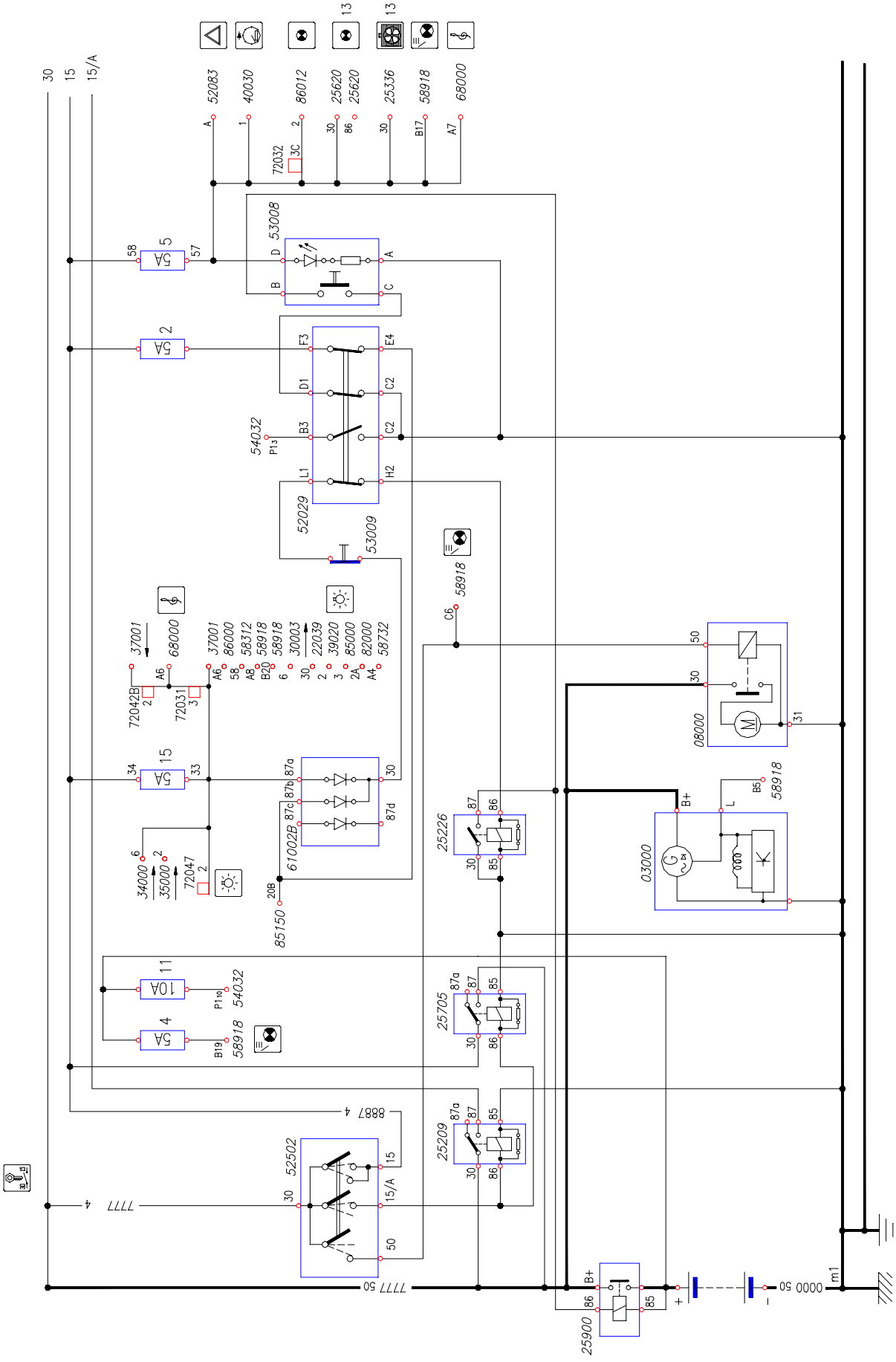

49865

Chart 53: System for North Africa vehicles

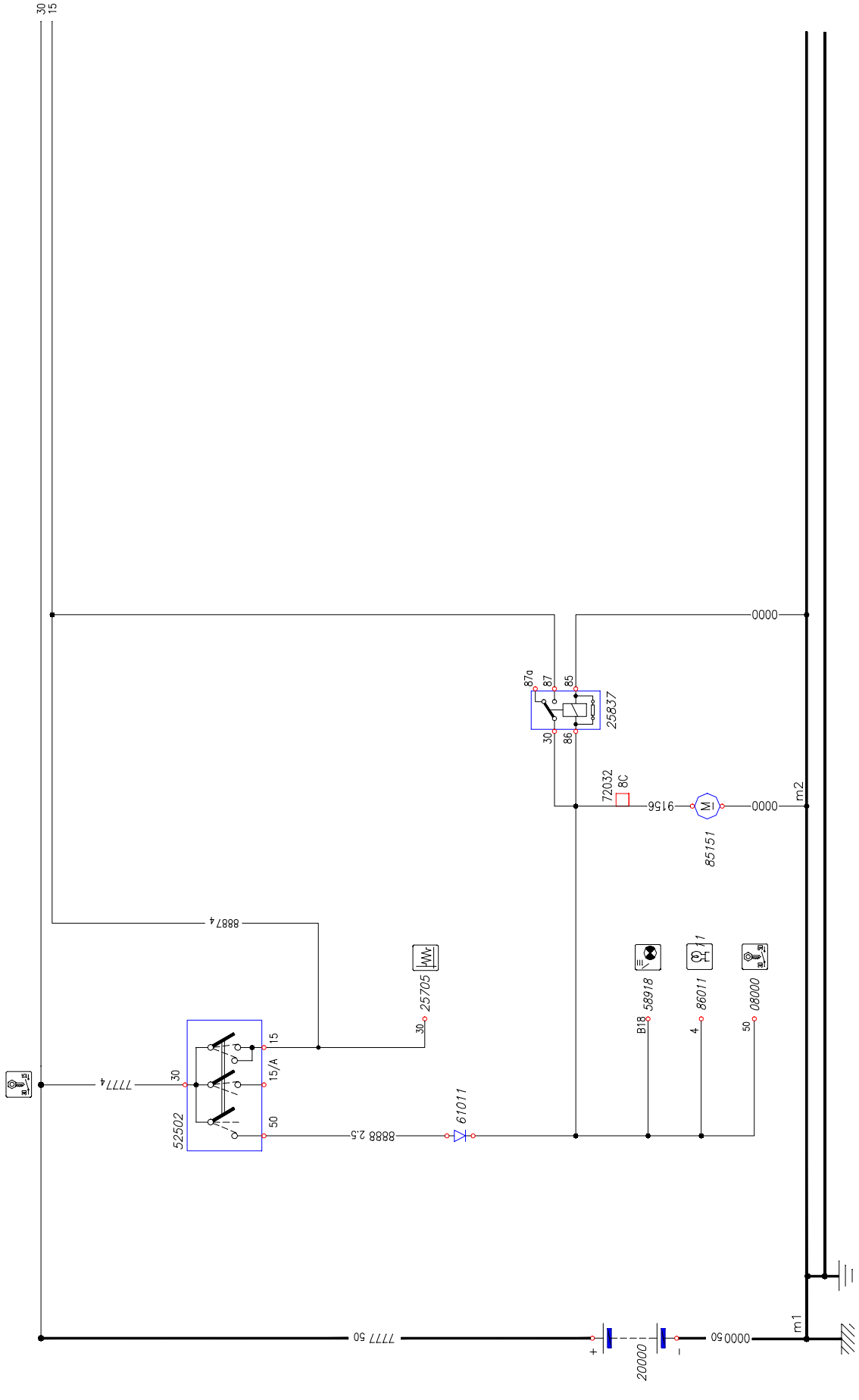

Chart 54: System for bus vehicles with 2-tone horn

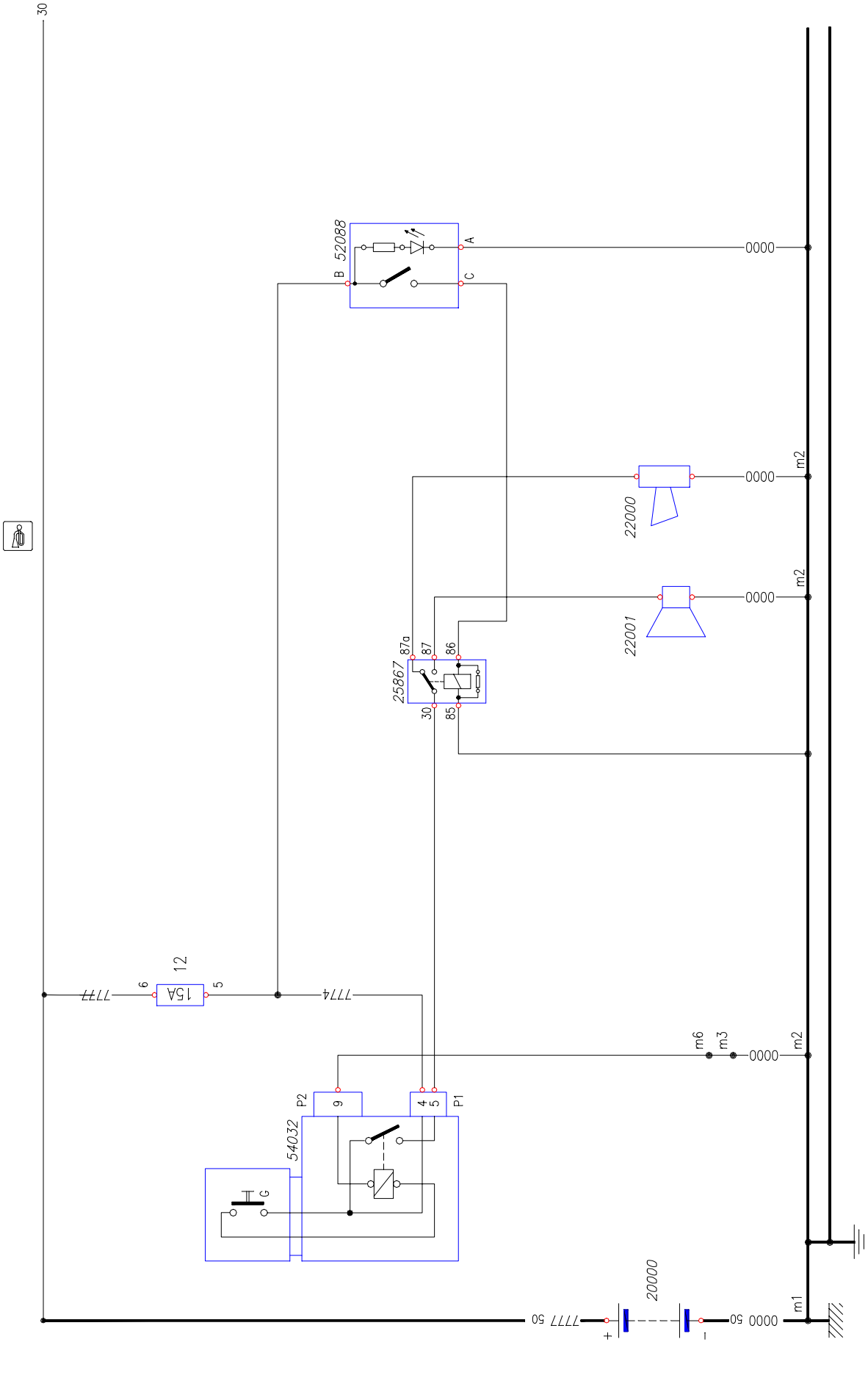

Chart 55: System for right hand drive rotating sliding door vehicles

